Historic Preservation Board

Wednesday, September 6, 2023 at 5:00 PM Via Zoom and In-Person, Room 209, 2nd Floor of City Hall

MEMBERS
Robert O'Brien, Chair
Hilary Bassett
Ashley Keenan
Brad Miller
Valerie Paquin-Gould
Jeffrey Talka
Rob Whitten

REMOTE PARTICIPATION:
You are invited to a Zoom webinar.
When: Sep 6, 2023 05:00 PM Eastern Time (US and Canada)
Topic: Historic Preservation Public Hearing and Workshop 9/6/2023

Please click the link below to join the webinar:
https://portlandmaine-gov.zoom.us/j/87321158064
Or One tap mobile :
+13017158592,,87321158064# US (Washington DC)
+13052241968,,87321158064# US
Or Telephone:
Dial(for higher quality, dial a number based on your current location):
+1 301 715 8592 US (Washington DC)
+1 305 224 1968 US
+1 309 205 3325 US
+1 929 205 6099 US (New York)
+1 360 209 5623 US
+1 386 347 5053 US
+1 507 473 4847 US
+1 564 217 2000 US
+1 669 444 9171 US
Webinar ID: 873 2115 8064
International numbers available: https://portlandmaine-gov.zoom.us/u/kb3spewinW

The Historic Preservation Board will hold a hybrid meeting in Room 209, 2nd Floor, City Hall. The public may attend the meeting in person or Zoom pursuant to the Remote Meeting Policy adopted by the Historic Preservation Board. Prior to the meeting, please check the Agenda Center (https://portlandme.portal.civicclerk.com) to view memos and reports which will be posted by the end of the day on the Friday before the Historic Preservation Board meeting as well as start times for each item as placement on the agenda can change.

REMOTE PARTICIPATION
Allow your computer to install the free Zoom app to get the best meeting experience. If you are not able to attend either in person or via Zoom, a recording will be available in the Agenda Center following the meeting.

PUBLIC COMMENT INFORMATION:

To submit written public comment on an agenda item, email hp@portlandmaine.gov. Submissions must be received by 12:00 pm **the day before** the Historic Preservation Board meeting to guarantee their inclusion in the agenda packet. All submissions must include the commenter's name and legal address. To help ensure your comment is submitted for the correct item, please include the name of the agenda item (see below).

Please note that the placement of each item on the agenda is subject to change. Please check the Agenda Center prior to the meeting for the item start time.

AGENDA:

1. ROLL CALL AND DECLARATION OF QUORUM

2. ELECTION OF NEW OFFICERS

i. Nominations and Board Approval for new Vice-Chairperson.

3. REPORT OF ATTENDANCE AT THE MEETING HELD ON AUGUST 2, 2023

i. PUBLIC HEARINGS:
58 Fore Street (Block 4): *Bassett, Miller, Talka, Tate, Whitten present; O'Brien absent*
58 Fore Street (Block 6): *Bassett, Miller, Talka, Tate, Whitten present; O'Brien joined late*
48 Brown Street: *Bassett, Miller, O'Brien, Talka, Tate, Whitten present*

4. REPORTS OF DECISIONS AT THE MEETING HELD ON AUGUST 2, 2023

i. Certificate of Appropriateness for New Construction; 58 FORE STREET (BLOCK 4) Portland Foreside Development Company, Applicants. A project and plan summary are available for viewing on the city's CSS Portal (https://css.portlandmaine.gov/) by referencing Plan Number HPBR-002380-2023. The Board voted 5-0 (O'Brien absent) to approve the application as submitted.

ii. Certificate of Appropriateness for New Construction; 58 FORE STREET (BLOCK 6) Portland Foreside Development Company, Applicants. A project and plan summary are available for viewing on the city's CSS Portal (https://css.portlandmaine.gov/) by referencing Plan Number HPBR-002391-2023. The Board voted 5-0 (O'Brien recused) to approve the application as submitted.

iii. Certificate of Appropriateness for New Construction; 48 Brown Street; Ocean Gate LLC, Applicants. A project and plan summary are available for viewing on the city's CSS Portal (https://css.portlandmaine.gov/) by referencing Plan Number HPBR-002541-2023. The Board voted unanimously (6-0) to approve the application as submitted.

5. COMMUNICATION AND REPORTS

i. Request to Amend the Congress Historic District. Staff will provide an overview of a request to amend the Congress Street Historic District by reclassifying 142 Free Street as non-contributing submitted by the Portland Museum of Art.

6. PUBLIC HEARING

i. Certificate of Appropriateness for New Construction, 76 CONGRESS STREET (site of former St. Lawrence Church sanctuary); Friends of the St. Lawrence Church, Applicant. A project and plan summary are available for viewing on the city's CSS Portal (https://css.portlandmaine.gov/) by referencing Plan Number HPBR-002025-2022.

7. WORKSHOP

i. Preliminary Review of Addition and Sitework; 73 NEWBURY STREET (THE ABYSSINIAN MEETING HOUSE); Committee to Restore the Abyssinian Church, Applicant. A project and plan summary are available for viewing on the city's CSS Portal (https://css.portlandmaine.gov/) by referencing Plan Number HPBR-002369-2023.

ii. Preliminary Review of Alterations; 106 PINE STREET; Diane M. Dow, Applicant. A project and plan summary are available for viewing on the city's CSS Portal (https://css.portlandmaine.gov/) by referencing Plan Number HPBR-002605-2023.

Planning & Urban Development
Christine Grimando, AICP
Director

MEMORANDUM

To: Chair O'Brien and Members of the Historic Preservation Board

From: Christine Grimando, Director of Planning & Urban Development

Date: August 24, 2023

Subject: Request to Reclassify 142 Free Street

Introduction

The Portland Museum of Art (PMA) has submitted a request (Attachment 1) to have their property at 142 Free Street reclassified from a contributing to a noncontributing structure within the Congress Street Historic District. To consider the request, two members of the Historic Preservation Board would need to initiate the amendment/rescission process. Below is a brief summary of the materials submitted in support of the reclassification request, procedural guidance, as well as a highlighting of pertinent sections of the Historic Preservation article (Article 17) of the City's Land Use Code (Attachment 2) The below doesn't include a substantive discussion of the proposal, which would follow once the amendment process was begun.

PMA Request

The package submitted by PMA in support of their request includes some history of the museum and its stewardship of museum buildings, including McLellan House, the Winslow Homer Studio, and the Charles Shipman Payson Building. It also introduces the topic of PMA's strategic plan, the recent International Design Competition for the campus, and the changing needs and vision of the institution. This information serves as context to their petition. Central to the Historic Preservation Board's consideration of their request, it includes an analysis of 142 Free Street's integrity according to National Register Guidelines and Portland's Historic Preservation integrity standards (Sec. 17.2 and 17.4.2), and a report on the *History of 142 Free Street and Free Street at Congress Square*, prepared by Margaret Gaetner, Historic Building Consultant which examines the history of the building and its alterations over time.

Amendment or Rescission of Designation

Section 17.5.9, *Amendment or rescission of designation*, states that amendment or rescission of a designation is prompted by any person or persons authorized to nominate a property or properties, or upon the request of the City Council. In the case of the current petition, PMA is asking to start a process to modify the district, specifically to reclassify 142 Free Street from contributing to non-contributing. No other change to the district is proposed.

Sec. 17.5.2.A identifies who can initiate a nomination for a district. This request to reclassify 142 Free Street is before the Board to utilize option 17.5.2.A.3: *By written petition of one or more owners of affected property in the case of a district, provided two members of the Historic Preservation Board must sponsor the petition.*

If two members of the Board were to sponsor the petition, the amendment would be considered pending. The process for review of the nomination to amend/rescind is then the same as that for a nomination to create a new designation, with a proposed district being reviewed by the Historic Preservation Board, the Planning Board, and ultimately the City Council. Immediate next steps would include the Planning & Urban Development Department notifying property owners within the district and the Historic Preservation Board conducting a preliminary workshop on the nomination within 60 days. The decision to sponsor the petition by two Board members does not signify a formal vote on the rescission.

Criteria For Amendment

The Board's recommendation for whether to reclassify 142 Free Street's status will depend on whether the materials in support of the application sufficiently address how the building does not meet the standards for designation. The criteria for amendment is limited to those provided in sections 17.4.1(A) and (B), Minimum criteria for designation, and Subsection 17.4.2, Integrity of Landmarks and Historic Districts (Attachment 2). The definition of noncontributing will also be useful to the review.

Historic Preservation Board Consideration

Staff will provide an overview of the request, the process, and the criteria at the September 6th Board meeting. That communication will provide an opportunity for the Board to discuss the request and to indicate if they'd like to sponsor the petition. The City's Land Use Code does not require that the Board take any action on the petition, but as PMA has gone to significant effort to address the criteria for designation in making this request, staff heartily recommends that two members of the Board sponsor this item, which would then allow the amendment to reclassify 142 Free Street to have a thorough public review and vote. Upon two or more members of the Board indicating they would like to nominate this amendment, the formal process to consider reclassifying the building will begin and the item will be on an upcoming Historic Preservation Board agenda for consideration.

Attachments

1. PMA Application
2. Chapter 14, Article 17 Excerpts

August 31, 2023

City of Portland
Historic Preservation Board
c/o Evan Schueckler
Historic Preservation Program Manager
389 Congress Street
Portland, ME 04101

Dear Historic Preservation Board,

Please accept this letter as an application for the Portland Museum of Art, Portland, Maine, to request that the Historic Preservation Board of the City of Portland re-classify the 142 Free Street property, currently a "contributing structure," to be "non-contributing" on the basis that the building never should have been classified as contributing in 2009 and 2020. Please review the History of 142 Free Street report prepared by Margaret Gaertner, Historic Building Consultant, for the details on the history of this property as well as the memo attached analyzing the existing designation position.

Throughout its lifetime, 142 Free Street has been significantly altered, and is now virtually unrecognizable when compared to previous iterations of the building. As a result, and after much diligence and research, we have come to believe it does not contribute to the district historically, nor does it support our city's innovative vision for the future. When considered for its role in the Congress Street Historic District, and as part of the PMA's historic campus, 142 Free Street does not carry the same historical stature, architectural consistency, or community significance that the District's or the museum's other properties do.

In the case of a nominated historic district, the Historic Preservation Board shall also determine whether there is an interrelationship of resources within it that creates an identifiable entity, even if composed of a wide variety of resources. A district must convey a visual sense of the overall historic environment or be a grouping of historically or functionally related properties. To be clear, we believe:

- 142 Free Street should not be designated a contributing structure and doing so diminishes the credibility of the designation.
- Our values and interests are absolutely aligned with the city's and are in the best interests of its citizens, visitors, and future.
- The PMA has a long history of stewardship and preservation of historic buildings, understands their significance, and has a legacy of architecturally significant contributions to our community.

After World War II, Portland's leaders looked to urban renewal to draw businesses and development into the city. A series of "slum-clearing" and redevelopment projects demolished entire blocks to make room for widened streets and new buildings that would accommodate an automobile-focused culture. To this day, many of these blocks, including much of Free Street,

remain vacant and await redevelopment. Implementation is *long* overdue. We have completed a thorough search to identify a design team with a bold vision that is appropriate for Portland, Maine, and the 142 Free Street site. With your support, we stand ready to create a new landmark for Portland.

The City of Portland is driven by a vision of "six interconnected themes," set forth in *Portland's Plan 2030*, of equity, connection, sustainability, dynamism, authenticity, security, and connectivity. The PMA is driven by the values of courage, equity, service, trust and sustainability, activating our *Art for All* mission. Together, with our communities we can create a landmark building that exemplifies these shared values and goals, communicating to anyone who visits that all are welcome in Portland, Maine. To do this, we must have the flexibility to develop our campus responsibly, with courage and care.

The Portland Museum of Art was founded 140 years ago by artists living here in Maine. It grew quickly, as community members donated their time, energy, and passion for the arts, enabling the PMA to establish a downtown Portland campus. For the next 100 years, that campus grew to include the McLellan House, LDM Sweat galleries, and the Clapp House. As art from donors throughout our communities began filling up the walls and spaces within the museum, our communities came together again in the late 1970s for what was, at the time, the largest major expansion in PMA history.

That expansion, a courageous and iconic design of the Charles Shipman Payson building by Harry Cobb of the I. M. Pei & Partners firm, was a result of collection growth, campus limitations, and community support. In the more than 40 years since construction began, the Payson building has anchored the dynamic and world-renowned arts district of Portland, Maine, and enabled millions of people to discover and connect with the transformative power of art.

But a lot has changed in 40 years.

Our collection has grown exponentially, and in the last decade alone has diversified deliberately and more quickly than at any point previously. Judy Glickman Lauder, Barbara Goodbody, Richard Estes, Bruce Brown, David and Eva Bradford, the Berger Collection Educational Trust, and Alex Katz Foundation have all made significant and transformative gifts to the PMA collection in recent years, expanding the narratives we can tell and connections we can make.

Our campus has changed, and we've restored the McLellan House, purchased, restored, and opened the Winslow Homer Studio, and reinstalled our collection multiple times to maximize our existing footprint. And yet our campus has reached its limit, with attendance already at twice the planned capacity of the Payson building. In just five years, we will more than triple the planned capacity of our campus. We need to expand, as we are being forced to make tough choices around reducing exhibition size and restricting capacity due to the physical limitations of our campus.

Critically, we, as a community, have changed as well. Our needs and expectations from our institutions have changed, and nowhere is that clearer than for museums. We must do more to create opportunity—on our walls, in our galleries, through our programs, on our board, and within our staff—to ensure the PMA experience reflects *your* experience, lifestyle, and values. We must elevate individuals and communities that have been excluded from museums and "the art world," embodying our values through artwork, exhibitions, programs, and didactics by and in partnership with our BIPOC communities, immigrants and new Mainers, LGBTQIA2S+ neighbors, our elders, youth, and other communities across Maine. We must be at the center of our communities, which

requires dialogue, trust, and transparency. And we must ensure we are championing a more diverse, inclusive, and sustainable region. We must become a community institution that is rooted in *belonging*.

142 Free Street is our catalyst for a brighter future, ensuring Congress Square is a sustainable center for arts and culture.

In 2022 we launched our vision with *The Blueprint Project: Building a Landmark for the Future*. This case for development was supported by years of open-ended community building and research, including campus planning, listening sessions, focus groups, strategic plan development, equity strategic action plan development, a feasibility study, and an economic impact study. Through this work, we came to understand what our communities want from museums and their arts institutions. These needs, desires, and expectations are embedded in the project, our Strategic Plan, and our mission, *Art for All*. We are the first museum in the country to have a mission led by our values in this way.

The shared values of the PMA and city of Portland were centerstage as we put out a global open call for architects to assemble diverse teams of experts to imagine the future of 142 Free Street. Our International Design Competition attracted submissions from 104 teams representing 20 countries, including Australia, Belgium, China, Denmark, Finland, Japan, Mexico, Spain, South Korea, United Arab Emirates, the United Kingdom, and more. In total, more than 250 firms participated as part of the 104 submitting teams, with 46 percent of all lead architecture firms founded or owned by people of color or women.

After a rigorous selection process, Portland, Oregon's LEVER Architecture won the commission. LEVER stood out for numerous reasons, chief among them their commitment to sustainable design and building practices, and deeply rooted understanding of DEAI.

Their initial concept has been overwhelmingly supported by our communities, with an astounding 93% positive feedback rate for LEVER's concept.

Here are a few of the impacts we're looking forward to:

1. **Align with our *Art for All* mission**. The new PMA wing will be a lasting example of our communities' values and the PMA's commitment to diversity, equity, accessibility, and inclusion. In the words of the late artist David Driskell, "What we leave as proof of our being here will not necessarily be in the sciences, in politics in economics, but will manifest itself through the arts". ***This once-in-a-lifetime museum expansion and unification that will forever change Maine and New England.*** Through *The PMA Blueprint*, we will redefine our region, unite our communities, and sustain our economy for generations to come.

2. **Contribute significantly to Portland and Maine's economy**. A 2022 economic analysis commissioned by the PMA through the Center for Business and Economic Research at the University of Southern Maine concludes that post-expansion, ***the PMA's annual economic contribution will more than double to include more than 600 jobs, $28.1 million in labor income, $65.3 million in sales, and $4.2 million in local and state taxes.*** The expansion also will solidify the PMA's status as quintessential destination and defining experience in Maine.

3. **Promote sustainability and spark revitalization across our state.** True to the spirit of the City of Portland's comprehensive plan and dedication to sustainability, our new building will showcase innovative construction materials and techniques that are on the forefront of sustainability. The building will be constructed primarily of mass timber, a remarkably strong, durable, and sustainable material with an ability to sequester carbon. When wood that is used for mass timber construction is obtained from sustainably managed forests, the resulting materials have a much lower life-cycle carbon footprint than steel and concrete, delivering a 26.5% reduction in global warming potential, according to University of Washington researchers. ***We're working to operationalize the shared desire for a mass timber plant in Maine and get it to the finish line with our policymakers at all levels, the University of Maine, Indigenous leaders, landowners, forestry advocates, businesses, and more.*** Why? Because mass timber in Maine just makes sense. We're the most forested state in the country—with nearly 90% of the land covered in forests, the potential to revitalize and reimagine our state through this innovative industry is real. This is a rare and unique opportunity to bring rural and urban communities, companies, and governments together through clean industries that make the world better and support Maine jobs.

4. **Expand inclusivity and belonging.** It is important to acknowledge and understand the potential interpretations of architectural styles, and when they are applied in different time periods, when considering what to champion for our city. Maine's marquee cultural institution must be a landmark designed with everyone in mind. 142 Free Street's current façade, however, was erected during the Jim Crow era. Our region is one that is striving to become more inclusive, dynamic, and diverse—a city where everyone belongs—and some architecture styles can carry unfortunate legacies of the past into the future that undermine these values and goals.

Without the removal of 2009's misclassified designation, we will not be able to realize this collective vision for our future and our city will be less dynamic, inclusive, equitable, and sustainable as a result.

We are aligned with the City of Portland's values and vision, and our drive to do right by our communities has been at the center of this project from day one. We believe that this project will spark our economies, spur urban development locally, and change the way our city and state are seen by visitors from around the world. We request that the City of Portland take the brave step forward to support our request to re-designate the 142 Free Street property to "non-Contributing" to enable our communities' vision for the City of Portland, our beautiful state, and the PMA.

Thank you for your consideration,

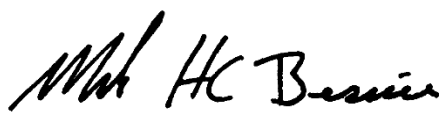

Mark H.C. Bessire
Judy and Leonard Lauder Director

Aspects of Integrity Evaluation for 142 Free Street

National Register and City of Portland

Please find the seven Aspects of Integrity and an assessment summarizing each aspect of 142 Free Street and the resulting impact on National Register (NR) eligibility for Individual Listing or as a contributing structure to a NR Historic District. Interior features and alterations are mentioned only in the context of NR eligibility for individual listing.

Per the 2020 district nomination update, the Period of Significance for the Spring Street National Register Historic District is 1800 through 1943, which includes the tenancy of the Chamber of Commerce. Other entities associated with the site—the Baptist Church, the Children's Museum—are not relevant to this evaluation as no physical fabric remains to represent the Church's ownership, and the Children's Museum's ownership post-dates the Period of Significance.

All historic interior elements are gone from 142 Free Street. This is more of an issue for individual eligibility—only the exterior is considered when evaluating if a building contributes or does not contribute to a National Register Historic District. The National Register Guidelines define the Aspects of Integrity as follows:

Location is the place where the historic property was constructed or the place where the historic event occurred.

Design is the combination of elements that create the form, plan, space, structure, and style of a property.

Setting is the physical environment of a historic property.

Materials are the physical elements that were combined or deposited during a particular period of time and in a particular pattern or configuration to form a historic property.

Workmanship is the physical evidence of the crafts of a particular culture or people during any given period in history or prehistory.

Feeling is a property's expression of the aesthetic or historic sense of a particular period of time.

Association is the direct link between an important historic event or person and a historic property.[1]

	Contributes to a District?	Eligibility for Individual Listing?	
Location	---	---	Building remains in original location. Integrity of location is uncompromised.
Design	The form of the building is compromised by the addition of the dormer and cupola.	Building would not be eligible for individual listing on the National Register due to the	Integrity of Design is compromised.

		alteration of the interior. The interior of the building has no integrity – plan is altered, all finishes removed, roof structure replaced.	
Setting	• The setting lacks any historic integrity – building is surrounded by parking lots and a ca. 1983 building (the Payson wing)	• The setting lacks any historic integrity. Historically, Free Street was a residential street (19th c.) and in the early 20th c. some commercial structures – the YMCA – replaced residences. 142 Free is now surrounded by surface parking lots and a ca. 1983 building (the Payson wing)	No Integrity of Setting remains.
Materials	• Large windows on the highly visible east facade are not wood. • Basement windows, east facade are not wood. • Front (main entry) doors, transom over same replaced with modern, metal doors.	• Large windows on the highly visible east facade are not wood. • Basement windows, east facade are not wood. • Front (main entry) doors, transom over same replaced with modern, metal doors	Integrity of Materials is compromised.
Workmanship		All elements of the 1927-43 interior are gone – no workmanship remains at interior.	For the interior, the Integrity of Workmanship is compromised.
Feeling	• Cupola changes the formal *feel* of the building. • The added dormer alters the roofline, a critical feature on this formal design.	• Cupola changes the formal *feel* of the building. • The added dormer alters the roofline, a critical feature on this formal design.	Integrity of Feeling is compromised.

		• The interior retains no feeling of its 1927-43 era.	
Association	Changes to the exterior – fenestration changes, replacement windows, dormers, cupola – have resulted in a stronger visual association with the Children's Museum's ownership.	• Interior retains no spaces or finishes to represent its association with the Chamber ca. 1927-43. • Changes to the exterior create a stronger association with the Children's Museum.	Integrity of Association is compromised.

City's Aspects of Integrity

The Designation Report does not assign/mention a Period of Significance.

The City's "Land Use Code" does not define Design, Condition, Materials, etc. (see "Definitions" on pages 17-1 through 17-3).

The City does not consider or review interiors, so the interior of the building is not discussed in the following list.

Location	---	Intact - building remains in original location.
Design	• Fenestration (window locations) altered – east facade. One opening added, one filled in at upper floor. Basement openings heavily altered – filled in, added, one opening enlarged to door. • Highly visible cupola added • Highly visible dormer added. • Highly visible skylights added.	Compromised.
Condition	---	Intact - building is generally in good condition.
Materials	• Large windows, east facade are not wood.	Compromised.

	• Basement windows, east facade are not wood. • Front (main entry) doors, transom over same replaced with modern, metal doors.	
Workmanship	• Windows replaced, the modern windows do not replicate the original design • Primary entry door, transom over same door replaced – door, transom are metal and do not replicate original design	Compromised.

[1] *National Register Bulletin How to Apply the National Register Criteria for Evaluation,* page 45. Available at https://www.nps.gov/subjects/nationalregister/upload/NRB-15_web508.pdf

July 10, 2023

I am happy to submit this letter of support for the potential new museum wing of the Portland Museum of Art.

As the General Manager of Crobo LLC, owner and operator of the State Theatre and Summer Concert Series at Thompson's Point, I can speak first-hand how incredible it has been to be a neighbor of the Portland Museum of Art. The PMA and the State Theatre are two of the oldest arts-institutions in Portland as we have welcomed both locals and tourists into our venues for a century. I am thrilled for the museum's expansion and the economic growth and impact that this expansion would have not only in our neighborhood, but city and state wide. The potential for more programming, event space and community events is certainly an exciting and big part of it all, but so is the commitment the PMA has made to sustainable building practices with this project, which is crucial as we navigate climate change in a coastal city.

From the PMA, to Congress Square free events, to the lines going into the State Theatre for a concert, to the bustling restaurants around us and the amazing, local retail stores that have opened - watching this neighborhood and city grow and thrive both economically and culturally has been a thrill to watch over the years, and I firmly believe that the PMA expansion would further this excitement and the tangible energy you can actually feel on the street. We have been grateful to be one part of it all, and we wholeheartedly both support and are excited for the Portland Museum of Art's expansion project.

Thank you,



Lauren Wayne
GM – Crobo LLC
State Theatre

SPRINGER'S
TRUSTED JEWELERS 1870

To the Historic Preservation Board,

I am writing in support of the redesign of 142 Free Street. I am currently the President of Springer's Jewelers located at 580 Congress Street. Although we technically reside on Congress Street, our most commonly used entrance is Free St.
We have been honored to be neighbors of the Portland Museum of Art for over 50 years.
As a fourth-generation family-owned business Springer's Jewelers understands the delicate balance between upholding tradition and welcoming change to meet the needs and expectations of our clients and community. It is no secret that the residents of upper Congress and Free Street have struggled with the balance needed for the community and businesses to thrive. The introduction of the "Arts District" has been well accepted by businesses in our area. The Portland Museum of Art is the anchor of this area and community.
We are in full support the redesign of the 142 Free Street location as an opportunity to let the Art District shine and create new history, while the Museum continues to pay homage to the already existing and maintained historical buildings that are part of its campus. We hope this letter helps to encourage a dialogue with the goal of supporting the evolution of Portland in a way we can all be proud of and call ours.

Sincerely,

Lilly Mullen
President & Fourth-Generation Owner, Springer's Jewelers

July 8, 2023

Chair Schueckler and Members of the Historic Preservation Board
Portland City Hall
389 Congress Street, 3rd Floor
Portland, Maine 04101

Re: PMA Blueprint Project and Redesignating 142 Free Street as a "Non-Contributing" Property in Portland's Historic District

Dear Chair Schueckler and Members of Historic Preservation

This letter serves as an expression of our support for the Portland Museum of Art's Blueprint Project, and its petition to redesignate 142 Free Street as a non-contributing building in Portland's Historic District. As neighbors, community members, business owners and historic preservationists in our own right, we believe the Blueprint Project and redesignation are vital to the future of the Museum campus and our neighborhood.

PMA has been a touchstone of Portland's economic and cultural vitality since the Museum's inception. Lying squarely at the heart of Portland's geographic and artistic cores, PMA must be allowed to adapt to the growing demands of the city and its audiences. The community has watched the campus grow over the last 190 years, sometimes with great purpose, other times more organically. The current structure at 142 Free Street is more a pastiche than a relic. Historic preservation is best utilized when it preserves the quality and character of a place and time. 142 Free Street no longer reflects a single character or quality requiring protection. Its value rests in its use, not its facade.

The Museum leadership has invested tremendous thought, time and resources into making sure this development is executed with integrity. Over the last two years, we've been thrilled to see the care they've taken paying homage to Maine's local and regional histories in their process. Every step of the way they've asked how best to look forward without forgetting the past. PMA has a vision for a more inclusive, welcoming Museum - a Museum whose vibrancy ripples out into the community. They can only fulfill this vision with freedom and latitude to execute this world class design in a manner that feels cohesive to the rest of the campus. Tying that process to the Greco-Roman facade at 142 Free Street would place an undue stylistic and structural burden on the project. More importantly, it would be imposing a fight to preserve something that doesn't speak to Portland's best past or future.

Thank you for your time and consideration. We look forward to the impact of the completed project, and working alongside PMA and City leadership to enhance the cultural and economic vitality of Portland.

Most sincerely,

Erin Kiley
Co-Owner, Portland Flea-for-All
Co-Owner, Hammond Heirs Block at 585-593 Congress Street
Portland Downtown Board of Directors

August 18, 2023

As an architect and lifelong Portland resident I am writing to support the Portland Museum of Art's proposal to expand their historic complex on Congress Square. The museum is the anchor for our Arts District and an important cultural asset for Portland and the wider Maine community.

I am pleased with the selection of LEVER Architecture's team for the design. I am confident that their design solution will respect the PMA's historic complex and be an important contribution to Congress Square and Portland's architectural fabric. Their sustainability goals for the project featuring engineered wood construction are exciting and forward thinking. It will be a bonus if the construction helps jumpstart the wood products industry in Maine.

It is obvious to me as a longtime PMA member that the museum has outgrown its current space and requires this expansion to provide flexible, non-traditional museum space to further their mission to serve a wider and more diverse arts community.

Sincerely,
Paul S Stevens Architect
37 Fessenden Avenue
Portland, Maine 04109



A History of 142 Free Street and Free Street at Congress Square

for the Portland Museum of Art Portland, Maine

July 5, 2023

Prepared by
Margaret Gaertner
M. Gaertner, Historic Building Consultant

Table of Contents

The Free Street Theater	3
The Free Street Baptist Church	5
Chamber of Commerce	10
The Children's Museum of Maine	14
Free Street	18
Congress Square Declines	26
Illustrations	33
Sources	41

The Free Street Theater (1830-1835)

Free Street and 142 Free Street are slightly off axis. For the purposes of the following report the Free Street-facing facade of 142 Free Street is the north facade and Free Street runs east-west.

Sometime in 1830, a building was constructed at 142 Free Street in Portland, Maine.[1] Originally built as a theater, it may have been the first theater constructed in Maine.[2] Some accounts called it the Portland Theater while others referred to it as the Free Street Theater.[3] One newspaper noted the cost of the theater building was $10,000.[4] Surviving deeds indicate there were many investors involved in the theater enterprise – a January, 1831 mortgage on the property listed twenty-seven grantors, or titleholders, with ownership rights in the theater building and lot.[5]

No drawings or other images of the building have been located, and the written descriptions of the original theater building vary.[6] The theater was a hipped-roof building set several feet back from the street line. A broad flight of steps ran up to a portico, where three doors led to the vestibule. There were also doors to the basement on either side of the steps. The facade had a recess, and two, large Ionic columns that supported a "heavy" entablature. Above the entablature, there

Free Street Theatre.—The Boston Galaxy has been altogether too obliging to us 'down Easters.' Our theatre is not opened; no Poem has been recited, and we are wonder-struck at the marvellous events which, the editor says, have happened in our town. We don't know here, who is the successful competitor for the Prize Poem, much less that a Poem has been delivered. We learn, however, that the Theatre will be opened to-morrow evening. The *Corps Dramatique* have been here over a week waiting for the finishing of the building which "is being" erected in Free-street. We are told, and we are happy to give such information to our readers, that the reputation, habits, and morality of this company are such as entitle it to the confidence of the public. Such information will be doubly agreeable to the lovers of the Drama with us, for they have so often been visited by Thespian gipsies. The Manager promises in his advertisement to use his best exertions to give satisfaction to the public. We have no doubt he will be successful.

This notice ran in the Portland Advertiser *on September 9, 1830. It suggests construction of the Free Street Theater was nearing completion on that date.*

1. *Free Street Baptist Church Semi-Centennial 1836-1886*, 74. "Free Street Theater," *Portland Advertiser* (September 28, 1830) np.
2. Herbert G. Jones, "Nothing Remains on Free Street…" *Portland Press Herald* (26 November, 1939) Section C, 10.
3. Herbert G. Jones, "Nothing Remains on Free Street…" *Portland Press Herald* (26 November, 1939) Section C, 10.
4. "Edwin Forrest Played Here 83 Years Ago," *Portland Sunday Telegram* (6 February, 1914) 1, "The Saunterer," *Portland Sunday Telegram* (25 November 1917) 6, and Herbert G. Jones, "Nothing Remains on Free Street…" *Portland Press Herald* (26 November, 1939) Section C, 10.
5. Cumberland County Registry of Deeds, Book 123, page 515.
6. For descriptions of the theater building, see: Herbert G. Jones, "Nothing Remains on Free Street…" *Portland Press Herald* (26 November, 1939) Section C, 10 and "The Saunterer," *Portland Sunday Telegram* (25 November, 1917) 6.

was a balustrade, also described as "heavy". There were four chimneys, one at each corner. The side walls had two rows of windows, likely one row for the basement, and the second at the main floor. Each row had six windows.

The Free Street Theater operated for approximately five years. Portland's proximity to Boston provided access to quality performers. In July 1831, a young Edwin Forrest, who would later become one of the most noted stage actors of the early-nineteenth century, appeared in a series of plays at the Free Street Theater.[7] Junius Booth, patriarch of the noted family of stage actors, is also believed to have performed there.[8]

As a business enterprise, the Theater appears to have struggled. Various newspapers in the early 1830s noted the re-opening of the theater and the appointment of new managers.[9] By 1835, the ownership of the theater was divided among three investors: Solomon Mudge, Enoch Mudge, and Nathaniel Jewett.[10]

By 1835, the Theater was closed for good. In December, 1835 the theater building was sold to eight Portland residents who were members of the First Baptist Society for $5,000.[11] The men intended to use the theater building as a church.

7. "Edwin Forrest Played Here 83 Years Ago," *Portland Sunday Telegram* (6 February, 1914) 1.
8. Herbert G. Jones, "Nothing Remains on Free Street…" *Portland Press Herald* (26 November, 1939) Section C, 10.
9. "Re-opening of the Portland Theatre," *Eastern Argus* (17 June, 1831) 2, *Daily Eastern Argus* (12 June, 1833) 2, and *Daily Eastern Argus* (8 July, 1833) 2.
10. Cumberland County Registry of Deeds, Book 142, Page 412.
11. Cumberland County Registry of Deeds, Book 146, page 14.

The Free Street Baptist Church (1836-1926)

The Free Street Baptist Society was incorporated in January 1836. A building committee was formed, and the building formerly known as the Portland Theater was purchased. The eight men who had bought the Theater in December, 1835 sold the property to the Free Street Baptist Society on January 18, 1836. The deed for the sale of the building to the Society specifically mentioned "…being the lot of land on which the Brick Building called the Theatre now stands..."[12]

The Church made major alteration campaigns to its building every twenty years – in 1836, 1856, and 1876 – that resulted in significant changes to the appearance of the building. A final remodeling in 1926 by the subsequent owner erased all remnants of the earlier church building from the front facade and interior.

In 1836, the building was converted from a theater to the Free Street Baptist Church. Per non-contemporary written accounts, the former theater was altered as follows: the hipped roof was replaced with a gable roof, and the entablature was extended. The earlier windows in the side walls were replaced with taller windows, three openings in each wall. By August 11, 1836 the renovations were completed and the building was dedicated. A small line drawing on John Cullum's 1836 *Map of the City of Portland…* records the earliest appearance of the Church. John Calvin Stevens' conjectural sketch of the Free Street Baptist Church (following page), published in 1886, appears to be based on that small drawing.

In 1856 the church building was remodeled per the designs of architect Richard Bond (1798-1861). Bond was a Boston-based architect who had designed the Portland Merchant's Exchange (1835-9) prior to receiving the commission for the redesign of the Free Street Baptist Church.[13]

The alterations cost $15,000[14] and included adding a new "front" to the building which brought the primary facade out to the street line. This new facade was Italianate in style, and included two asymmetrical towers. The taller of the two towers was 185 feet tall and dominated the neighborhood around it. Surviving photographs show a light-colored building, lighter than the brick buildings adjacent to it, indicating the brick structure was painted, or more likely, stuccoed and scored, to imitate stone. Remnants of a stone-colored finish are still visible on the west facade of the building.

12. Cumberland County Registry of Deeds, Book 143, page 446.
13. Stephen Jerome, "Richard Bond," *Biographical Dictionary of Architects in Maine* (Volume V, No. 2) 1988.
14. William Willis, *The History of Portland* (Somersworth, NH: New Hampshire Publishing Company, 1972) 691.

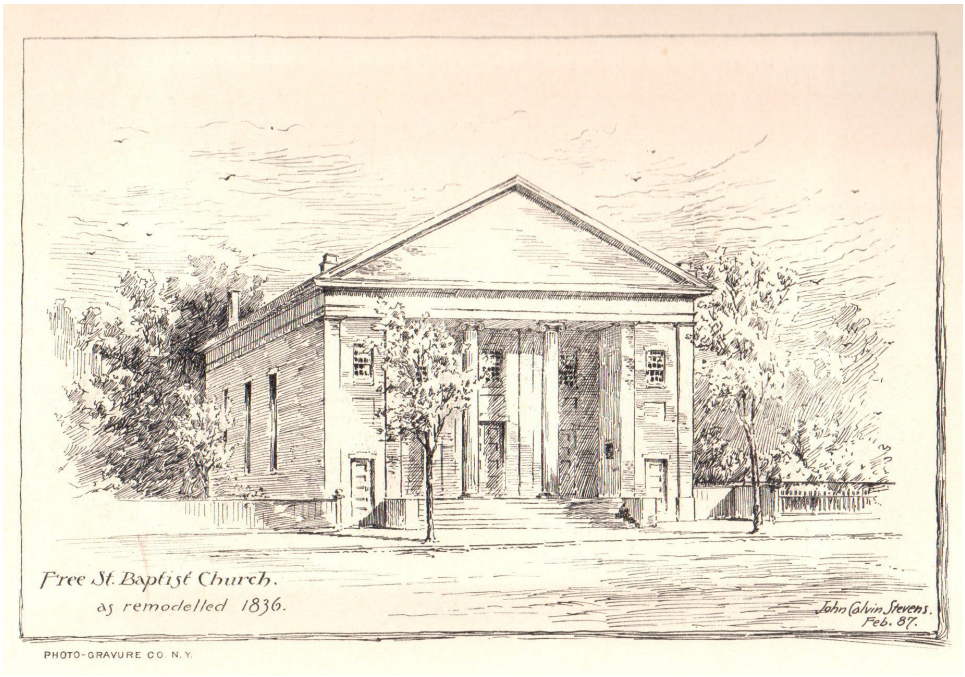

In 1887, architect John Calvin Stevens made this sketch of the Free Street Baptist Church as he believed it would have appeared in 1836.

Source: *Free Street Baptist Church Semi-Centennial 1836-1886.*

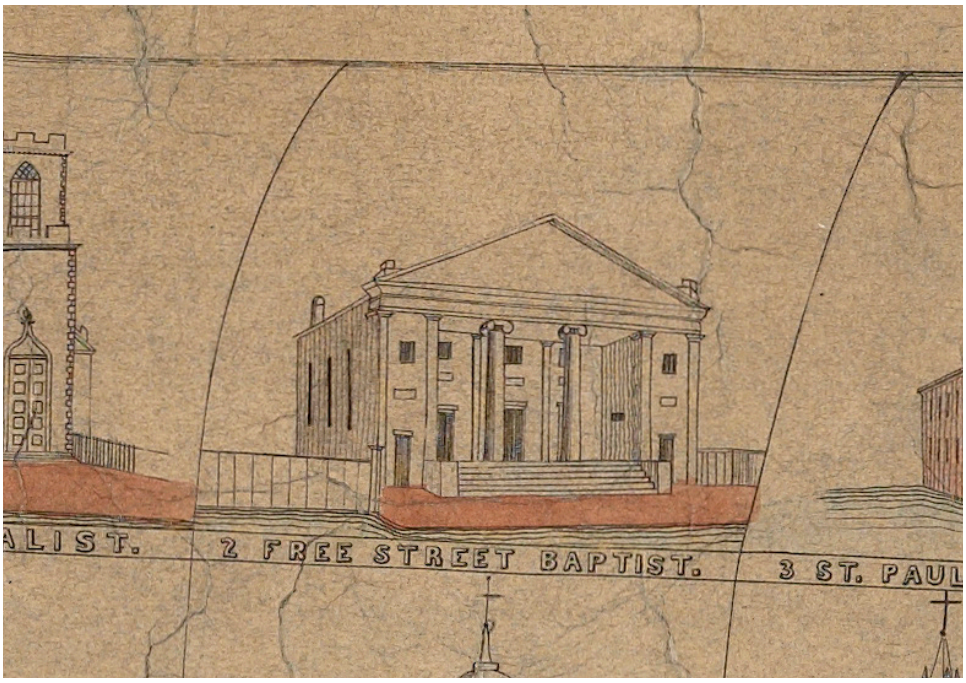

This drawing of the Free Street Baptist Church was included on John Cullum's 1836 map of Portland. It likely was the source for John Calvin Stevens' 1887 sketch of the Church (above).

Source: John Cullum, *A Map of the City of Portland with its Latest Improvements...,* 1836.



These finish remnants found on the west facade record the stone color that was once found on the exterior of the Free Street Baptist Church.

In March, 1876 a fierce gale damaged the original spire.[15] The spire and its base were removed and replaced with a shorter, eight-sided, curved dome roof on a new base (see photographs, next page).

In 1887, the Free Street Baptist Church spent $6,500 on a "thorough improving" of the Church and a few years after that, stained glass windows were installed in the building.[16] In 1894, five-sixths of the lath-and-plaster ceiling fell down, including the furring, landing on and damaging some of the pews.[17]

In 1922, the Free Street Baptist Church and the First Free Baptist Church merged and formed the Immanuel Baptist Church. The newly formed congregation decided to build a new, shared church at the corner of Deering and High Streets. On October 15, 1926, the Immanuel Baptist Church sold its building at 142 Free Street to the Portland Chamber of Commerce ("the Chamber").[18] As part of the sale agreement, the Church retained ownership of the stained glass windows, organ, and pews that were then in the building.[19]

15. *Free Street Baptist Church Semi-Centennial 1836-1886*, 79.
16. "A Fall in Plaster," *The Portland Daily Press* (25 October, 1894) 8.
17. "A Fall in Plaster," *The Portland Daily Press* (25 October, 1894) 8.
18. The Chamber of Commerce has had several names over its existence including the Chamber of Commerce of Portland and the Chamber of Commerce of the Greater Portland Region. For the purposes of this report, "Chamber of Commerce" will be used.
19. Cumberland County Registry of Deeds, Deed dated October 31, 1991, Book 1246, page 482.

Right: The Free Street Baptist Church as it appeared after architect Richard Bond's 1856 redesign was complete. Below: The Free Street Baptist Church as it appeared after the spire was removed in 1876. In both images, the only building shown that still stands today is the Hay Building, the two-story "flat iron" building to the left of the Church.



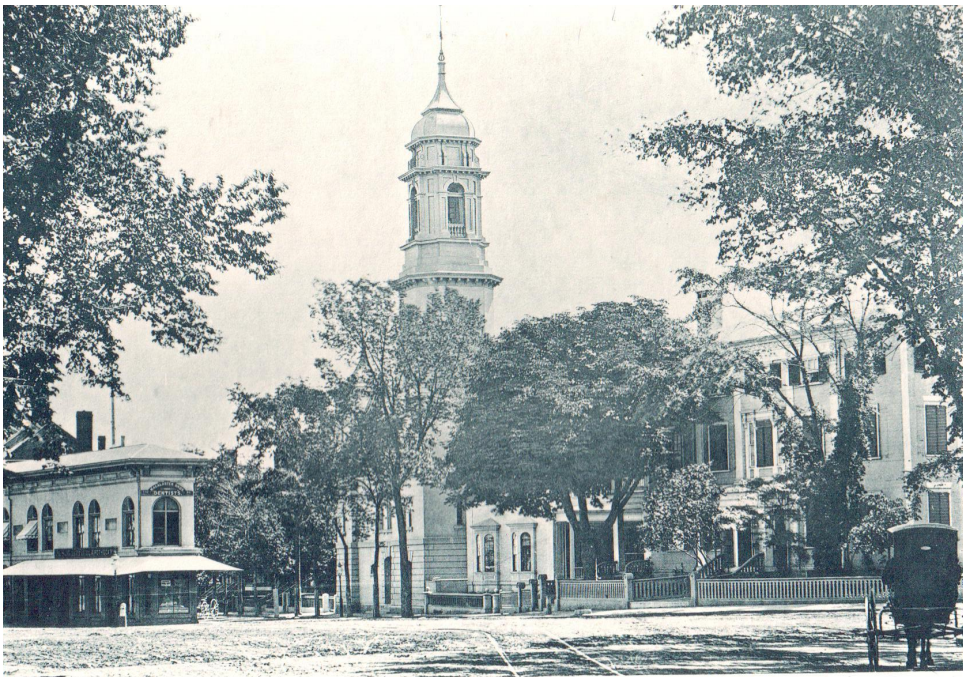



This interior view of the Free Street Baptist Church was published in 1887.

Source: *Free Street Baptist Church Semi-Centennial 1836-1886.*

Chamber of Commerce (1926-1991)

In 1926, the Chamber of Commerce bought 142 Free Street[20] and announced plans to renovate it for their new home. The Chamber retained architects John Calvin Stevens and John Howard Stevens to convert the former church into the Chamber's new headquarters.[21] The contractors for the work were W. W. Cunningham & Sons.

As noted by the press, the remodeled building retained little of its appearance from its days as a church. The two projecting towers on the Free Street facade were removed, and northernmost fifteen feet of the building (at Free Street) were rebuilt. The front facade of the building, likely stuccoed to resemble stone in its Church days, was completely removed and replaced with a new facade of exposed brick. The new facade had a portico supported on four concrete columns between two brick piers.

The extant building bears so little resemblance to the earlier Free Street Baptist Church that it is difficult to see how the Church was remodeled rather than completely replaced. Comparison of the building footprints as recorded in the 1924 assessor's sketch of the building footprint and the footprint in the current assessor's database show the basic dimensions are roughly the same. Photographs of the east facade from 1925 and 1958 (see photographs on following page) show the window openings on that wall were retained (new lintels were added in 1926) as was part of the cornice. Remnants of a stone-colored finish remain on the exterior face of the west wall (see photograph, page 7) but very little else of the building's past as a Church building appears to have survived.

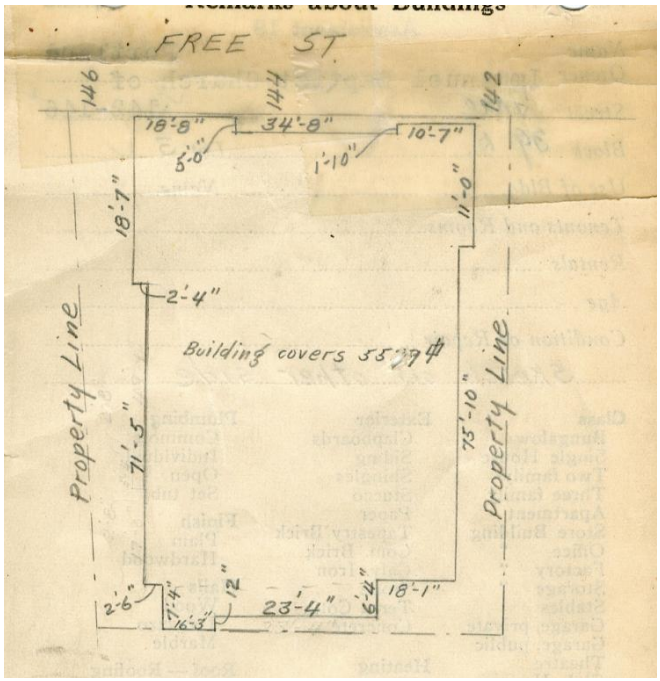

This sketch floor plan was included in the City of Portland's 1924 assessment card for 142 Free Street.

Source: City of Portland - Planning & Development Department.

20. Cumberland County Registry of Deeds, Book 9779, page 254.
21. Drawings for the Stevens' alterations are not known to have survived. They are not in the collections of the Maine Historical Society. Requests to the Avery Library at Columbia University were not returned.



The Free Street Baptist Church in 1925 (above) and the Chamber of Commerce in 1958 (below). Without these two views to compare, it is difficult to see how the Church building was remodeled into the Chamber. The Free Street end of the building (at the right in these images) was completely replaced, and the brick walls are a different color.

Source: *Portland Evening Express,* May 31, 1958.



In addition to the exterior changes, the interior was remodeled. Although no architectural drawings have been located, the fenestration of the side walls suggests the north end of the building was divided into two floors, likely office space, while the south end was a double-height space. A "hard fuel" (coal) steam heating system was installed. During the sixty-five years the Chamber owned 142 Free Street, it continued to make small improvements and upgrades to the building. In 1941, an internal stair at the rear of the building that connected the first floor and basement was "floored over."[22]

In 1959, the Chamber remodeled the interior of the building.[23] In June of that year, the Chamber applied for a building permit to make $54,700 in alterations "as per plans." The contractor was Samuel Aceto & Co. Inc.[24] As part of the alterations, the coal-fired steam heating system was converted to oil.[25] In 1966, the Chamber completed a "brightening" of the exterior of 142 Free Street. The work included painting and repointing and cost $15,000.[26] In January, 1972 the Chamber applied for a building permit to complete $85,000 worth of renovation and alteration work "as per plan." The referenced plan has not survived.[27] The inspector noted steel beams were installed in the basement. As part of that project, the Chamber installed air-conditioning in the building.[28]

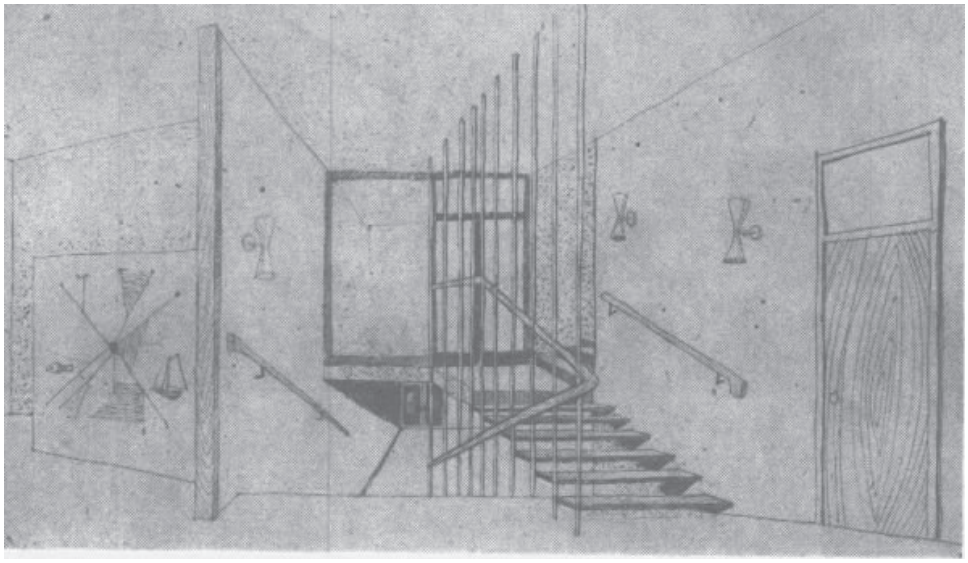

This rendering shows the interior design proposed for the Chamber of Commerce building in 1959. It is not known if the design was executed.

Source: *Portland Evening Express*, April 17, 1959.

22. Permitting and Inspections, Permit number 1919, dated December 9, 1941.
23. "Older than it Looks," *Evening Express* (14 January 1966) 7.
24. The referenced plans were not included with the building permit. Permitting and Inspections, Permit number 749, dated June 17, 1959.
25. Permitting and Inspections, Permit number 848, dated July 7, 1959.
26. "Older than it Looks," *Evening Express* (14 January 1966) 7.
27. Permitting and Inspections, Permit number 0112, dated January 21, 1972.
28. Permitting and Inspections, Permit number 0168, dated February 8, 1972.



142 Free Street (left) and the former WCTU building at 150 Free Street (right) on January 30, 1980. The WCTU building was torn down later that year.

Source: Portland Press Herald Still-Film Negatives Collection, Portland Public Library.

Throughout the 1980s, the Chamber reported financial difficulties. In October 1981, the Chamber of Commerce announced a "cash flow" problem of $100,000. Most of the shortfall was due to cuts in federal programs that had covered salaries for clerical staff.[29]

In June, 1982 the Chamber announced a deficit of $65,000. The shortage was to be covered by bank loans, with refinancing of the mortgage on 142 Free Street listed as a possible longer-term solution.[30] By 1990, the Chamber had decided to sell their building. Chamber President Bill Nugent said the building was too big for their needs, and had deteriorated over the years. He also noted that while the building had lowered ceilings, the original ceilings were about thirty feet high and "nicely decorated."[31] On October 31, 1991 the Chamber sold 142 Free Street to the Children's Museum of Maine.[32]

29. Frank Sleeper, "Chamber problem: $100,000," *Evening Express* (26 October, 1981) 1.
30. Frank Sleeper, "Chamber shows $65,000 Deficit," *Evening Express* 7 (May, 1982) 1
31. "Chamber Puts Building up for Sale," *Evening Express* (9 January, 1990) 16.
32. Cumberland County Registry of Deeds, Book 9770, page 254.

The Children's Museum of Maine (1991- 2019)

The next owner of 142 Free Street was The Children's Museum of Maine. As did prior owners, the Children's Museum made alterations to the building to accommodate their activities. The renovations were extensive and included complete demolition of the interior and alterations to the exterior.

The Children's Museum worked with architect Stephen Blatt, structural engineers Pinkham & Greer, and Wright-Ryan Construction to renovate the building. On his website, Stephen Blatt notes the Chamber of Commerce building was "…severely dilapidated…." prior to the renovations. The construction cost was 1.1 million.[33]

The primary, Free Street-facing facade saw few changes. The primary entry door and the transom over it were removed and replaced with a modern frame, transom, and door of metal. On the east facade, the fenestration was altered. During the Chamber of Commerce's ownership, the south end of the facade had three, double height window openings with wood sash. The northernmost window was removed, the opening was infilled with brick, and two, smaller windows



Left: Only one of the ca. 1926 double-height wood windows survives in the building. Below: the extant entry door and transom are late-twentieth century replacement.



33. City of Portland, Permitting and Inspections, Permit No. 923937, issued July 21, 1992.

installed in the infilled portion. A new, double-height window was installed between the surviving two windows at the south end.

An eight-sided cupola was placed on the ridge of the roof and a large, shed-roofed dormer and three skylights were installed on the east roof slope. The cornice south of the downspout was removed and replaced with a new cornice that was to match the existing (see diagram, following page).[34] Other changes to the exterior of the building included a new addition to the south facade for an egress stair.

The renovations for the future Children's Museum occurred in 1992, two years after Portland enacted its historic preservation ordinance. A 1997 building permit noted the building was "Not in District or Landmark" and "Does not Require Review."[35] Had the alterations been reviewed for compliance with historic preservation standards, it is likely that most of the exterior alterations, including the addition of a large cupola and a large dormer in locations so highly visible from a public way (Free Street); alteration of the fenestration on the east facade; and replacement of the ca. 1926 windows would have been denied.

The interior of the building was completely gutted in 1992. The demolition work included removing the existing wood roof trusses and replacing them with a steel roof frame. A steel "superstructure" was also added to the building. A new, interior stair enclosed in modern masonry walls was constructed in the northwest corner of the building. An elevator was added as well.

No historic floor, wall, or ceiling finishes survive today. It is likely that any that had survived were removed as part of the 1990s work. Records in the City of Portland's building permit files indicate concrete slabs were poured for the basement, first, and second floors.[36] As seen from the interior of the building, the existing floors are poured in modern, corrugated pans, confirming that all of the floor framing and flooring was replaced as well. A sprinkler system was installed throughout the building.[37]

In 2017, the Children's Museum and Theater of Maine announced its plans to relocate to a new, larger building at Thompson's Point in Portland. The new building was to include 30,000 square feet of space, while the building at 142 Free Street had only 18,000. On October 15, 2019, the Children's Museum sold the building at 142 Free Street to its neighbor, the Portland Museum of Art.

34. City of Portland, Permitting and Inspections, 142 Free Street file, undated elevation drawing.
35. City of Portland, Permitting and Inspections, Permit No. 971138, issued October 20, 1997.
36. City of Portland, Permitting and Inspections, 142 Free Street file, Con Test Lab, Inc. "Report of Compressive Strength…"
37. City of Portland, Permitting and Inspections, Permit 924219, Issued October 8, 1992. Letter, P. Samuel Hoffses to Sprinkler Systems Inc., October 8, 1992. Inspections Department.

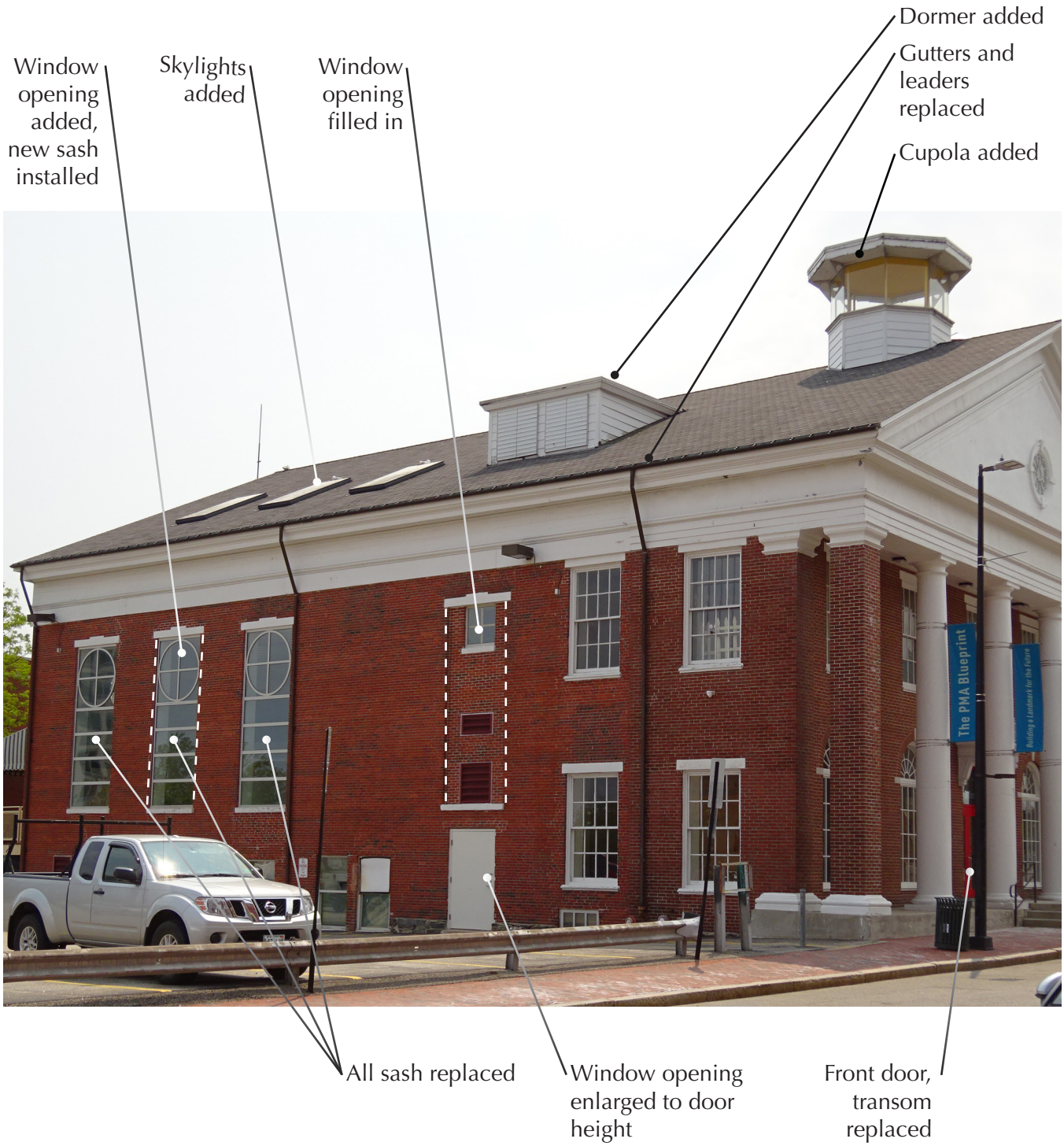

Exterior alterations to 142 Free Street made for the Children's Museum in the early 1990s.



Renovations made by the Children's Museum in the early 1990s included gutting the interior of the building. Today, no historic interior finishes remain. Note the modern steel framing and skylights in the image at right.



Free Street

The earliest section of Free Street, originally called Love Lane, was laid out in 1772. Initially, it extended only from Center Street to Middle Street – Free Street once ended where it now intersects Cross Street. In 1783, Free Street was extended westward to meet the intersection of Congress and High Streets, which became its western terminus. The newly built section, wider than the original part, was called Windmill Lane, after the windmill that once stood at the top of the hill. In 1788 the original portion of the road was widened to align with the newer section, and the entire street was renamed Free Street.[1] The intersection of Congress, High, and Free Streets is known as Congress Square.

By the early-nineteenth century, Congress Square was a wealthy residential neighborhood lined with some of Portland's finest homes. Noted residences here included the Cobb Mansion, a ca. 1801 Federal-style home designed by Alexander Parris at present-day 7 Congress Square. Further down High Street and on Spring Street were the twin mansions of Stephen McLellan (116 High Street, 1800) and Major Hugh McLellan (107 Spring Street, ca. 1801). The latter was designed by John Kimball, Sr. At the corner of High and Congress Streets was the ca. 1837 Nathaniel Warren mansion, a brick Greek Revival building with an angled facade and two-story porch on columns. As one moved eastward along Free Street, the houses were somewhat smaller, and typically built in a simpler versions of the Federal and Greek Revival styles. These residences were a mix of brick and frame construction, and some were freestanding, while others were duplexes or rowhouses. Both the north and south sides of Free Street were still largely residential as late as 1886 (see maps and images, following pages).



The south side of Free Street was once lined with brick homes such as this one that stood at 134 Free.

Source: Maine Historical Society. For study purposes only / not for publication.

1. "Free Street Dates Back to Before Revolution," *Portland Sunday Telegram* (16 December, 1917) 5.

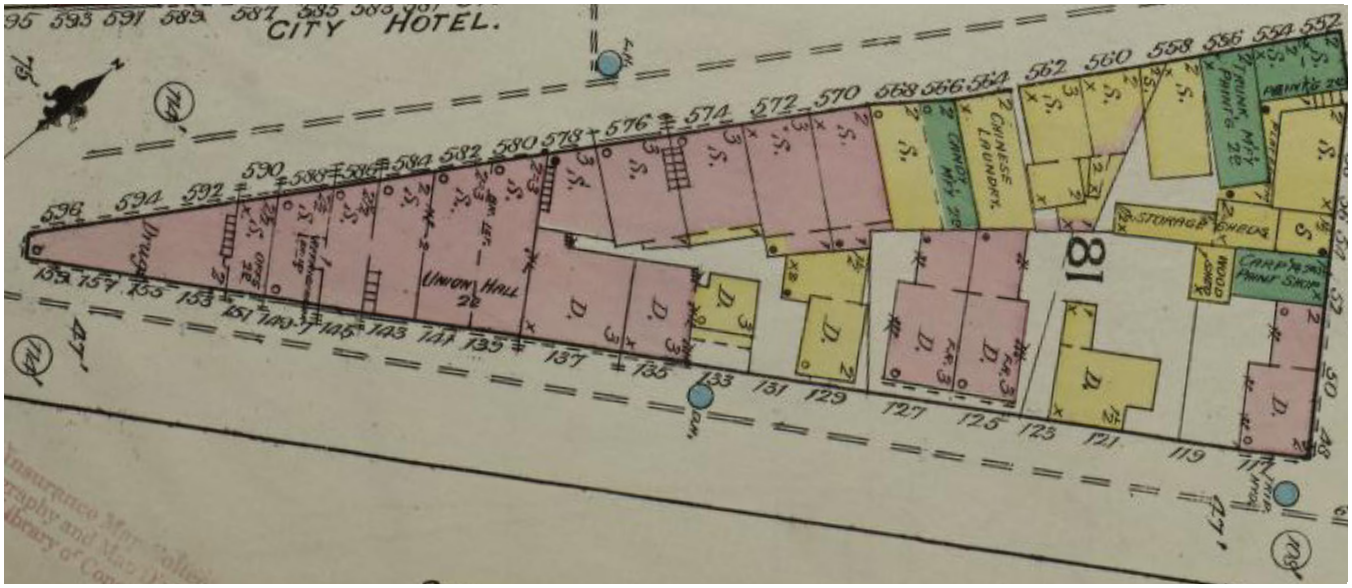

As seen in the Sanborn map of 1886, the north side of Free Street east of Congress Square was still largely residential as late as 1886. On the north side of the street (above) all of the structures east of the "Union Hall" were "dwellings" (labeled "D" on the map).

Source: *Sanborn Fire Insurance Map from Portland, Cumberland County, Maine,* Plate 12 (above) and Plate 24 (below). 1886.





Photograph of the area around Congress Square ca. 1885.

Source: Maine Historical Society. For study purposes only / not for publication.

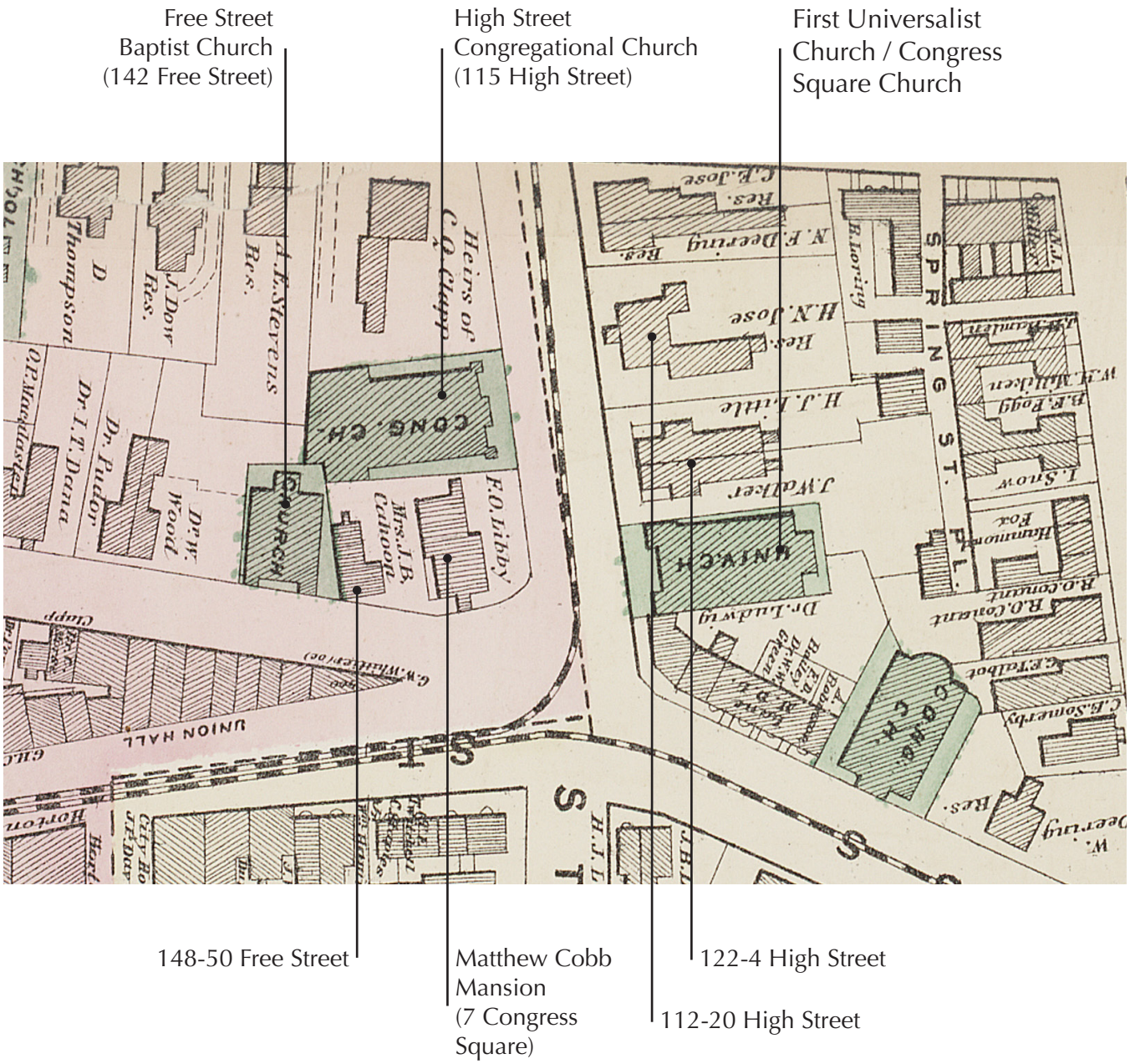

Map showing the area around Congress Square in 1871. Please note the map has been flipped to align with photograph on the previous page.

Source: Beer's Atlas of Cumberland County.

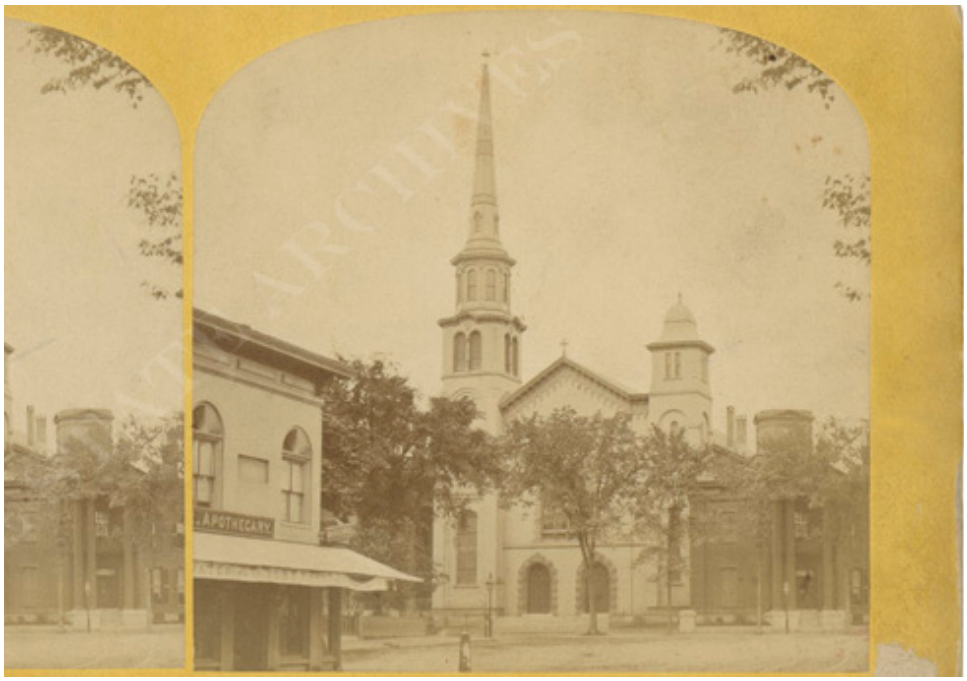

The former First Universalist Church / Congress Square Church on High Street and the Nathaniel Warren mansion to its right. The Hay Building is visible in the foreground.

Source: Stereoview Photograph Collection, Maine State Archives.

Large churches were built between the residences, including the High Street Congregational Church at 115 High Street (ca. 1831) and the Free Street Baptist Church, which took over and remodeled a former theater at 142 Free Street in 1836. The streets were lined with trees, and the overall feeling was one of prosperity and elegance. Commercial activities were found on nearby Congress Street, in small-scale buildings. The Hay Building (ca. 1922, third story added 1922) at 594 Congress Street is typical of the retail buildings that lined Congress Street during the early- to mid-nineteenth century.



An early view of Congress Street, immediately east of Congress Square. The street is lined with small-scale, two- and three-story commercial buildings.

Source: Stereoview Photograph Collection, Maine State Archives.

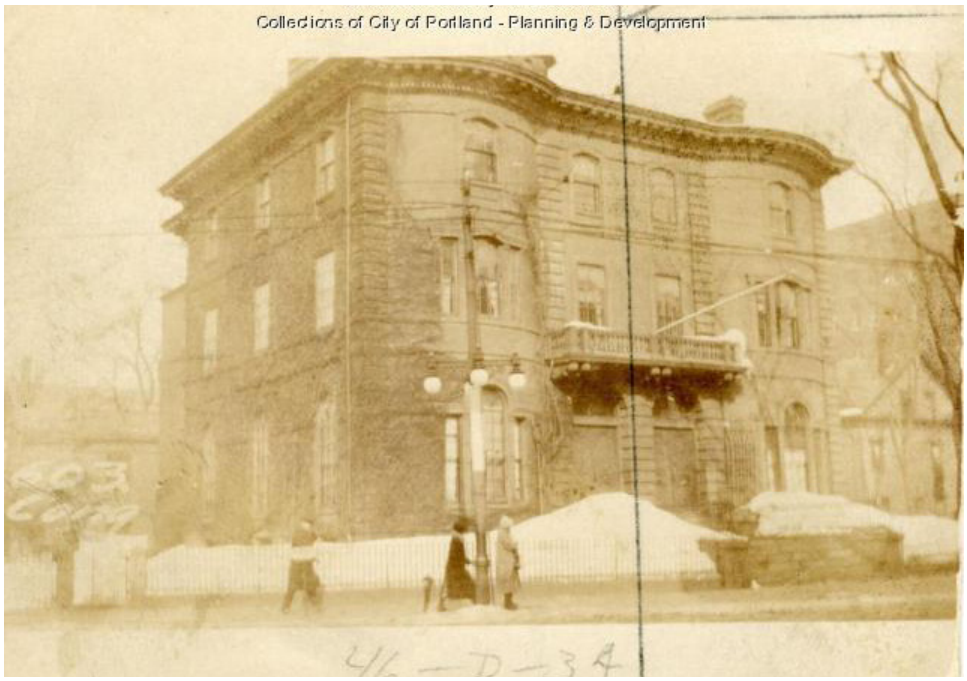

The Libby Mansion in 1924.

Source: City of Portland - Planning & Development Department.

As the nineteenth century progressed, the area remained fashionable and more large residences were built, in the Italianate, Second Empire, and Queen Anne styles. The Libby Mansion, at the northwest corner of Congress and High, was among the grandest. Designed in 1853 by architect Charles Alexander, it was actually a double house. 126 High Street was another double residence, this one in the Greek Revival Style. The brick house had a hipped roof that extended over engaged side porches, and was supported on two-story tall columns.

Existing churches were remodeled, and new ones constructed. The Baptists remodeled their Free Street church in 1859, adding a tall spire and Italianate facade over their existing building. The Universalists constructed a large church, known as the Congress Square Church, in 1865 at 1 Congress Square. The Congregational Church on High Street was updated to a Gothic Revival style in 1869.

Most of Free Street was spared by Portland's Great Fire of 1866. Only the eastern-most end, the commercial area at Middle Street, was lost. This block was quickly rebuilt after the fire, and today remains a well-preserved block of commercial buildings built in a range of architectural styles popular in the 1870s.

The late-nineteenth and early-twentieth century saw extensive changes to the formerly genteel and largely residential neighborhood around Congress Square. As the neighborhood became less fashionable, many of the mansions that lined Congress and High Streets were divided into apartments or converted for civic and charitable uses. Some of the homes were demolished and replaced by larger, commercial structures.



Congress Square after 1897. The Cobb Mansion that stood at the corner has been demolished and the YMCA/Libby Building constructed in its place. The brick Nathaniel Warren Mansion still stands at the right.

Source: Collection of the author.



Congress Square after 1920. The Nathaniel Warren mansion that stood at the corner has been demolished and the Shwartz Building constructed in its place. The postmark on the rear of the card is May 6, 1926.

Source: Collection of the author.



As the neighborhood around Congress Square became less fashionable, the once-grand homes were re-purposed. By 1924, this large duplex home at 126 High Street had an addition for retail spaces at street level and was divided into apartments at the upper floors.

Source: City of Portland - Planning & Development Department.

The 1886 Sanborn map recorded that the Cobb Mansion (7 Congress Square) was then home to the Cumberland Club. By 1890, the Cumberland Club had moved to the Stephen McLellan Mansion (116 High Street). The Cobb Mansion was demolished and replaced in 1897 by a five-story tall brick building for the Young Men's Christian Association (YMCA). In 1908, Margaret Mussey Sweat donated the Hugh McLellan Mansion (107 Spring Street) to the Portland Society of Art and it was converted into a museum. The Nathaniel Warren Mansion at 1 Congress Square was replaced by the Shwartz Building, a four-story brick commercial building with a round tower, in 1920. Across Congress Street, the Libby Mansion was demolished and replaced by the State Theater building.

While these changes marked a shift towards larger, commercial structures, the new buildings where typically executed in brick and granite with traditional styles and details. The area around Congress Square was no longer a wealthy residential neighborhood, and instead was transitioning into a vibrant, commercial area of hotels, theaters, restaurants, and shopping. This trend continued until the Great Depression halted nearly all development in Portland.

Congress Square Declines

After World War II, Portland, like many older cities, struggled to redefine itself and compete with suburban, automobile-based development. Civic leaders took on a number of efforts, including slum-clearing and redevelopment studies, plans, and projects intended to improve living conditions, modernize the city, and attract investment and redevelopment.

Among the most far reaching was "Patterns for Progress," an urban renewal plan written in 1967 that sought to create a ring of high-speed roads to move cars around the central core of the Portland peninsula. This resulted in the widening of Franklin and Spring Streets to create "arterials." Spring Street, which had previously ended at Center Street, was also extended to Middle Street. High and State Streets became one-way streets, increasing traffic speeds and affecting the character of these historic neighborhoods. Large areas on Cumberland Avenue and near Monument Square were razed to create open space for development. Some of these projects, such as One City Center, took decades to materialize. Others, such as the "Downtown Project No. 1," a proposed fifteen-story residential tower on Cumberland Avenue, never happened and that land is largely still a surface parking lot.

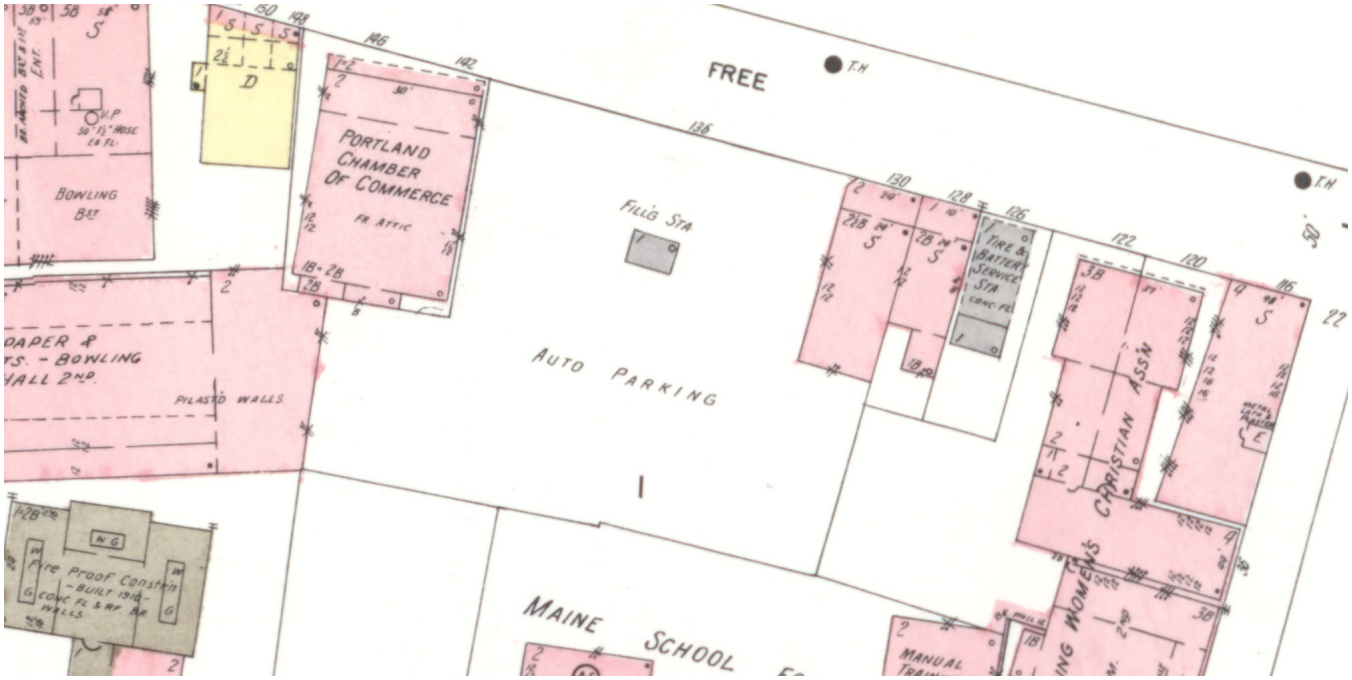

The south side of Free Street in 1954. Automobiles have arrived, and the residences at 126, 134, and 136 Free Street have been torn down for parking lots and auto-repair buildings. One-story additions for commercial uses have been added to the fronts of 128 and 130 Free Street and the former WCTU building at 150 Free Street.

Source: *Sanborn Fire Insurance Map from Portland, Cumberland County, Maine,* Plate 29. 1954.



Looking west on Free Street, 1924. The Jefferson Theater is in the foreground and the tower on the Free Street Baptist Church is visible in the background.

Source: City of Portland - Planning & Development Department.

Even before the official urban renewal efforts began, Free Street's streetscape near Congress Square was already being lost to modern development and the increased demand for parking. Portland's 1924 tax photographs record an intact streetscape along the south side of Free Street, from Oak Street to High Street. At the southeast corner of Free and Oak was the Jefferson Theater, a ca. 1897 five-story brick theater, while an early-twentieth century commercial building occupied the southwest corner (116 Free Street, extant). Between the commercial building and the Free Street Baptist Church was a row of seven two- and three-story tall brick residences dating to the mid-nineteenth century. An eighth house, a wood-framed building at 150 Free Street later owned by the Women' Christian Temperance Union (WCTU), stood between the Church and the YMCA.

The north side of Free Street, while more commercial, was also intact. This side was dominated by the elaborate brick and terracotta facade of the Baxter Memorial Building. Although this was actually the back of the building – the building's address was 562 Congress Street – the Free Street facade was nonetheless detailed with arches over the windows, belt courses, and swags, all of terracotta.

Shortly after 1924, Free Street began to change rapidly. In 1926, the Free Street Baptist Church was altered to its present, portico-front form. In 1933, the Jefferson Theater at the southeast corner of Free and Oak was torn down. In 1947, a modern, nearly windowless block of blonde brick – a Sears Roebuck store – was built on its site. Across the street, in 1954-5, all of the historic details were stripped off of the Congress Street and Free Street facades of the Baxter Memorial, and modern windows were installed.



The Jefferson Theater stood on the southeast corner of Free and Oak Streets. It was demolished in 1933.

Source: Collection of the author.

The south side of Free Street was also severely altered. The 1954 Sanborn map and an aerial photograph taken in 1960 (see photograph, page 30) records that only five of eight houses (120, 124, 128, 130, and 150 Free) remained on the south side of Free Street by that time. 126 Free Street had already been torn down and replaced with a concrete building used for "Tire and Battery" service. 130 Free and 150 Free were both heavily altered, with commercial additions on their primary facades. The rest of the block was an open parking lot with a filling station. Thus, much of this loss occurred prior to the implementation of official urban renewal projects in the area. Today, only a single, heavily altered former residence remains (128 Free Street).

Removal of historic buildings on Congress Square continued through the 1970s and 1980s. The former Universalist Church (128-32 High Street / 1 Congress Square) and the Greek Revival duplex next to it (126 High Street) were demolished to build a new studio building and parking lot for WCSH in 1977. In 1980, the former YMCA building at 7 Congress Square and the small, wood-framed building immediately east of the YMCA were torn down. In 1983, the Payson Wing of the Portland Museum of Art was built on those lots. On High Street, the former High Street Congregational Church appears to have been altered into a commercial building by 1924 before it was eventually demolished sometime before 1972. Today, none of the churches that once lined Congress Square remain.



This Sears Roebuck store was built on the site of the Jefferson Theater. This photograph was taken in 1947.

Source: Portland Press Herald Still-Film Negatives Collection, Portland Public Library.



The former Sears Roebuck store in 2023.



An aerial view of Congress Square taken in 1960. Much of the south side of Free Street is already a parking lot.

Source: Portland Press Herald Still-Film Negatives Collection, Portland Public Library.



An aerial view of Spring Street taken in 1972. Spring Street has been widened, and the Holiday Inn is visible. The rear walls of 142 Free Street and the Libby Building are visible at the left edge of the photograph. The building south of the Libby Building - originally a Congregational Church, later a recreation building - has been demolished. Much of the south side of Free Street remains an open parking lot.

Source: Portland Press Herald Still-Film Negatives Collection, Portland Public Library.

116 **128** **142**



Comparison of ca. 2022 aerial photograph of Free Street (middle image) with the 1914 Richards Standard Atlas of the City of Portland *reveals how few buildings remain on the south side (top image) of Free Street.*

South Side of Free Street in 1924

116 Free Street



120-24 Free Street
Demolished after 1960



126 Free Street
Demolished before 1954
128 Free Street
Extant; altered and non-contributing
130 Free Street
Demolished after 1975



134-6 Free Street
Demolished before 1960



142 Free Street

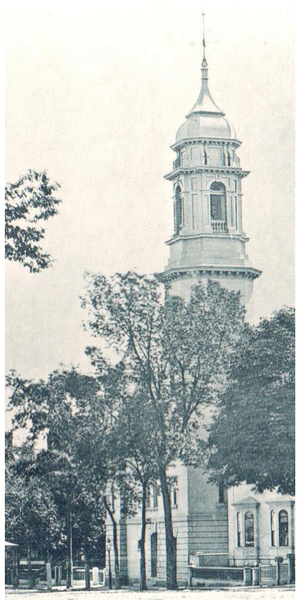

150 Free Street

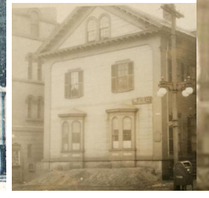

7 Congress Square





116 Free Street



120-24 Free Street
(parking lot)



126 Free Street
(parking lot)



128 Free Street
(extant; non-contributing)



134-6 Free Street
(parking lot)



142 Free Street



150 Free Street / 7 Congress Square

South Side of Free Street in 2023

This demolition did not occur without objection. The widening of Spring Street in 1970 and the loss of the historic houses on its south side were one of several events that led to the nomination of the Spring Street Historic District to the National Register in 1970 and passage of a Historic Preservation Ordinance by the City of Portland in 1990. Unfortunately, the damage to the portion of Free Street adjacent to Congress Square was already done. The Spring Street National Register District nomination acknowledged the loss in the Description section and noted "This is an active section of modern day Portland, yet this district retains the flavor and appearance of an older time. There are only a few modern structures and these front on streets such as Congress and Free which are commercial...an urban renewal project has leveled a section giving rise to the location of a new Sears-Roebuck store and parking area, on the eastern part of Spring Street. Some cleared land lies vacant. With the exceptions of the above the remaining district contains a great many old, but proud, structurally sound residences..."



142 Free Street, the former WCTU building at 150 Free Street, and the YMCA / Libby Building in 1978. The Libby Building and WCTU building were torn down in 1980.

Source: Portland Press Herald Still-Film Negatives Collection, Portland Public Library.

Illustrations



This 1836 map includes a line drawing showing the Free Street Baptist Church in 1836.

Source: "A Map of the City of Portland with its Latest Improvements including a view of the principal buildings engraved and published by John Cullum, Portland." Osher Map Library.

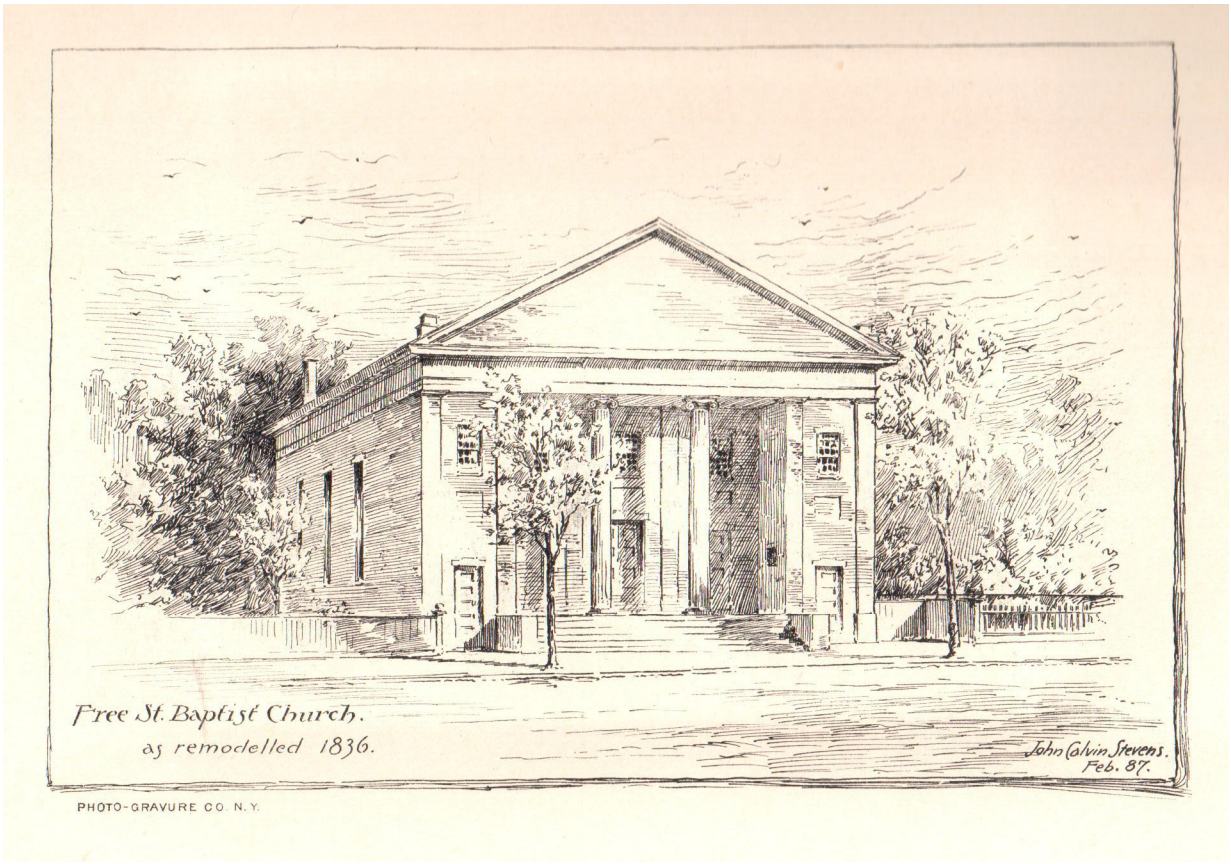

John Calvin Steven's sketch of the possible appearance of the Free Street Baptist Church prior to the 1856 remodeling campaign.

Source: *Free Street Baptist Church Semi-Centennial 1836-1886.* Collection of the author.



An early photograph of the Free Street Baptist Church - note the original, ca. 1856 steeple is still in place. The Hay Building is only two stories high.

Source: *Free Street Baptist Church Semi-Centennial 1836-1886.* Collection of the author.

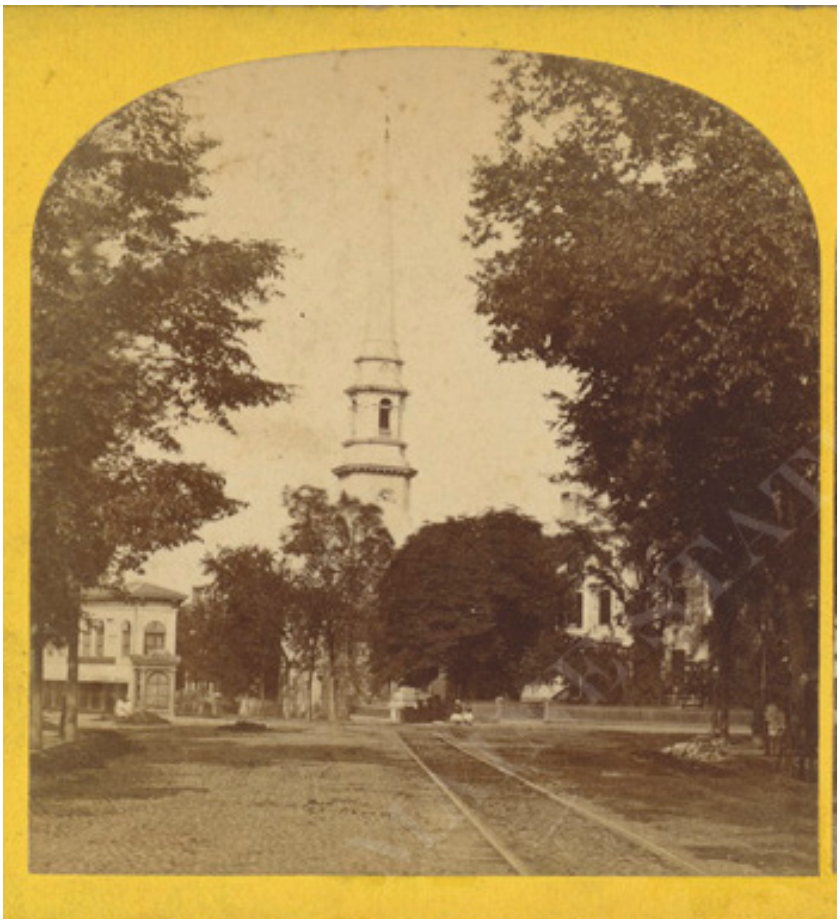

An early stereoview photograph of the Free Street Baptist Church. The original, ca. 1856 steeple is still in place.

Source: Stereoview Photograph Collection, Maine State Archives.



The Free Street Baptist Church, sometime after 1876.

Source: *Free Street Baptist Church Semi-Centennial 1836-1886*. Collection of the author.



An 1882 map of Congress Square.

Source: *Revaluation Plans City of Portland, 1882*. Plate 39. Portland Public Library.



Congress Square in the early-twentieth century, showing the ca. 1897 YMCA/Libby Building at the center, and the Free Street Baptist Church at the left. The spire of the High Street Congregational Church is visible at the right, behind the Libby Building. This image was published in 1908.

Source: *In and About Portland,* 1908. Library of Congress.

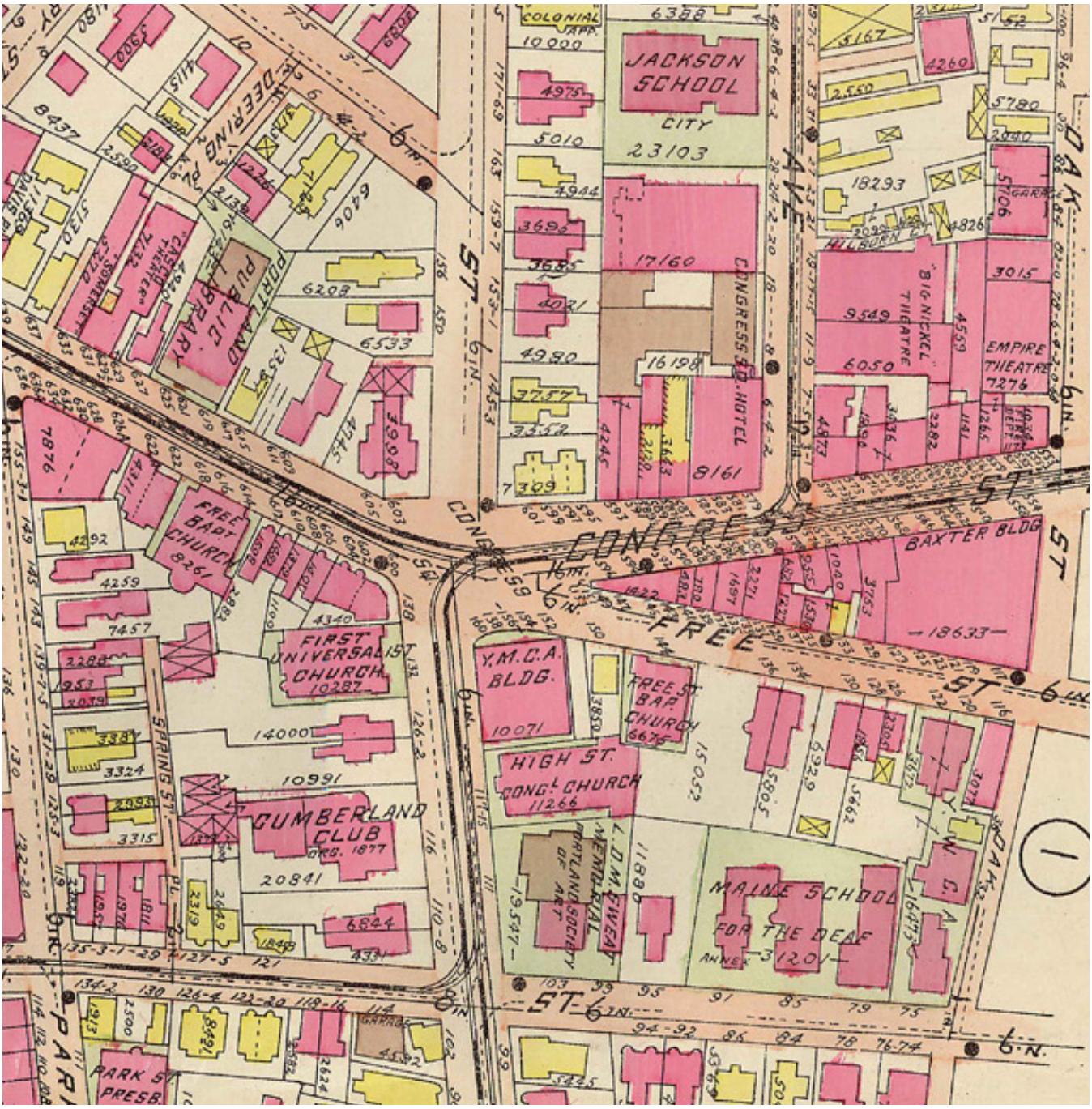

Congress Square in 1914. The wood-framed Matthew Cobb Mansion has been replaced by the YMCA / Libby Building. The Free Street Baptist Church at 142 Free Street retains its towers.

Source: *Richards Standard Atlas of the City of Portland…,* 1914. Portland Public Library.

Sources

Beckett, S. B. *Directory of Portland*. Portland, ME: A. W. Thayer, 1823-1881.

Briggs, John W. "National Register of Historic Places Inventory – Nomination Form Spring Street Historic District." 31 December, 1969.

City of Portland, Maine – Permitting and Inspections. Building Permits, 142 Free Street.

City of Portland – Planning & Development. *Portland Historic Resources Inventory*. 2009. https://content.civicplus.com/api/assets/5d37ff0d-67f7-4e9e-96da-71d65e84a517

City of Portland, Maine. *Portland Renewal : A Decade of Planning and Progress, 1951 - 1961*. Accessed via https://digitalcommons.portlandlibrary.com/citydocs_documents/10

Cumberland County Registry of Deeds.

Eastern Argus. 1831-34.

Ellwell, Edward H. *Portland and Vicinity*. Portland, ME: Loring, Short, & Harmon, 1876. https://archive.org/details/portlandvicinity00elwe/mode/2up

Free Street Baptist Church. *Free Street Baptist Church Semi-Centennial 1836-1886*. Portland, ME: Free Street Baptist Church, 1887.

Jerome , Stephen. "Richard Bond," *Biographical Dictionary of Architects in Maine* Volume V, No 2, 1988.

In and About Portland. Portland, ME: L. H. Nelson Co., 1908. Accessed via https://www.loc.gov/item/tmp92006263/

Larry, Julie. "Greater Portland Landmarks' Urban Renewal Roots." Greater Portland Landmarks. April 28, 2020. https://www.portlandlandmarks.org/blog/2020/4/28/historic-preservation-in-the-urban-renewal-era

Portland Advertiser. 1830.

Portland Daily Press. 1894.

Portland Evening Express. 1959 to 1990.

Portland Press Herald. 1926 to 1959.

Portland Sunday Telegram. 1903 to 1939.

Stephen Blatt Architects. (Website). "Children's Museum." http://www.sbarchitects.com/childrensMuseum.html#

Willis, William. *The History of Portland*. Somersworth NH: New Hampshire Publishing Company, 1972.

Writers' Program of the Work Projects Administration in the State of Maine. *Portland City Guide*. Portland, ME: Forest City Printing Company, 1940.

Atlases and Maps

Atlas of Cumberland County, Maine. From Actual Surveys by and under the Direction of F.W. Beers. New York: F.W. Beers & Co., 1871.

Bird's eye view of the City of Portland, Maine 1876. Madison, WI: J. J. Stoner, 1876. Accessed via the Library of Congress at https://www.loc.gov/resource/g3734p.pm002490/

City of Portland, Maine. *Revaluation Plans of the City of Portland*. Portland, ME : City Engineer, 1882

Cullum, John. *A Map of the City of Portland with its Latest Improvements including a view of the Principal Buildings*... Portland, ME: John Cullum, 1836. Accessed via the Osher Map Library at https://oshermaps.org/browse-maps?id=100798#?c=&m=&cv=&xywh=-3835%2C-1%2C16182%2C6349

Richards Standard Atlas of the City of Portland, Including the City of So. Portland, Maine… Springfield, MA: Richards Map Co., 1914.

Sanborn Fire Insurance Map from Portland, Cumberland County, Maine. Sanborn Map Company, 1886. Accessed via the Library of Congress at https://www.loc.gov/item/sanborn03527_001/

Sanborn Fire Insurance Map from Portland, Cumberland County, Maine. Sanborn Map Company, 1896. Accessed via the Library of Congress at https://www.loc.gov/item/sanborn03527_002/

Sanborn Fire Insurance Map from Portland, Cumberland County, Maine. Sanborn Map Company, 1909. Accessed via the Library of Congress at https://www.loc.gov/item/sanborn03527_003/

Sanborn Fire Insurance Map from Portland, Cumberland County, Maine, Vol. 1. Sanborn Map Company, Republished 1954. Accessed via the Library of Congress at https://www.loc.gov/item/sanborn03527_007/.

Photograph Collections

City of Portland – Planning & Development. "1924 Tax Collection." Accessed via mainememory.net

Maine Historical Society. "Photographs – Free Street."

Maine State Archives. "Stereoview Photograph Collection." Accessed via https://digitalmaine.com/arc_stereoview/

Portland Public Library Special Collections & Archives. *Portland Press Herald - Still Film Negatives Collection*. Accessed via https://digitalcommons.portlandlibrary.com/pphnegs/

The Economic Contribution and Impact of the Portland Museum of Art in Maine

A snapshot from a typical year before the PMA Blueprint facilities expansion and estimates post-expansion



Photo from the PMA website

Prepared for the Portland Museum Of Art

By the Maine Center for Business and Economic Research, University of Southern Maine

December 2022

PORTLAND MUSEUM of ART

MAINE CENTER FOR BUSINESS AND ECONOMIC RESEARCH
UNIVERSITY OF SOUTHERN MAINE

UNIVERSITY OF SOUTHERN MAINE

TABLE OF CONTENTS

1. Executive Summary
2. Introduction and Methods
    1. Economic Overview & Trends
    2. Ongoing Museum Operations
    3. Visitor Spending & Assumptions
3. Pre-Expansion Snapshot, 2019
    1. Economic Contribution of Museum Operations
    2. Economic Impact of Visitors to the Portland Museum of Art
    3. The Portland Museum of Art's Economic Contribution & Impact in Maine
    4. Tax Impacts
4. Post-Expansion Snapshot, 2027
    1. Economic Contribution of Museum Operations
    2. Economic Impact of Visitors to the Portland Museum of Art
    3. The Portland Museum of Art's Economic Contribution & Impact in Maine
    4. Tax Impacts
5. Five-Year Construction Impacts in the Maine Economy
6. Technical Appendices

Executive Summary

With a renewed commitment to diversity, equity, accessibility, and inclusion the Portland Museum of Art's (PMA) vision to become a central community gathering place and serve as a regional economic catalyst is being realized through its $100M multi-year redevelopment and construction project funded in part by an ongoing capital fundraising campaign. The following economic analysis – commissioned by the PMA and completed by the Center for Business and Economic Research (CBER) at the University of Southern Maine (USM) – quantifies the Museums ongoing contributions and impacts on the Maine economy in a typical year before the PMA Blueprint project (i.e., construction/expansion) and estimates the PMAs impact in a typical year after the expansion. Indirect and induced multiplier effects and some of the direct impacts are estimated by a Maine input-output model (IMPLAN, 2019 Data).

Pre-Expansion Snapshot, the PMA's annual economic contribution in 2019

The two major components of the PMA's economic contribution stem from museum spending and visitor spending. In 2019, the PMA welcomed over 170,000 patrons, an estimated 13% of which were from out of state and their trip to Maine was motivated by visiting the museum. These tourists spent an estimated $12.6 million directly on lodging, meals, shopping, transportation, etc. from outside of the museum. At the same time, the PMA paid $8M to maintain its ongoing operations, 69% of the direct operating costs were spent in Maine. Direct spending by out-of-state tourists supported an additional $8.1M in output (sales) – including both indirect and induced spending – and an additional 52 jobs. *For every $100 of tourists spending (sales), an additional $79 is generated elsewhere in the local economy.*

Including indirect and induced spending, the Museums direct operating activities supported an additional $5.7M in output (sales), and 37 jobs. *For every $100 of the PMA spending (sales), an additional $99 is generated elsewhere in the local economy.* Combine, in a typical year before the expansion the PMA supported:

- **Over 300 jobs.** Museum & visitor spending supported 309 jobs of which 220 were direct impacts and another 89 were supported through indirect and induced spending.
- **$12.9M labor income.** $8.7 million in direct labor income which supported an additional $4.2 million in indirect and induced impacts.
- **$29.8M output (sales).** Generated a total of $29.8 million in total output of which $16M were from the initial direct spending which supported another $13.8M in indirect and induced impacts.
- **$1.9 million in local and state taxes.** In 2019, $786,599 in local and $1.1 million in state taxes are estimated to result from the PMA's ongoing museum operations and by spending of tourists.

Post-Expansion Snapshot, the PMA's annual economic contribution in 2027

The PMA Blueprint project is expected to be complete in 2027 and the new facilities open to the public. The PMA will have more space to host events, display more and higher quality exhibits, and in turn attract more visitors to the state. The increased capacity and diversity could allow the museum to welcome up to 300,000 annual visitors. An estimated 16% of visitors from out of state may take a trip to Maine motivated by visiting the PMA and could spend an estimated $28M on direct tourism-related expenditures.

To support the additional capacity, the PMA's annual operating budget will nearly double from the pre-expansion snapshot and a greater portion will be spent in Maine (81%) to purchase goods and services from local businesses and pay museum employees. In total, the estimated contribution for 2027, the year *after* the expansion, includes:

Executive Summary

Post-Expansion Snapshot, the PMA's annual economic contribution in 2027

- **Over 600 jobs.** Museum & visitor spending supported 621 jobs of which 426 were direct and another 195 were supported through indirect and induced spending.
- **$28.1M labor income.** $18.8 million in direct labor income which supported an additional $9.3 million in indirect and induced impacts.
- **$65.3M output (sales).** Generated a total of $65.3 million in total output of which $35M were from the initial direct spending which supported another $30.2M in indirect and induced impacts.
- **$4.2 million in local and state taxes in 2027.** In 2027, $1.7 million in local and $2.5 million in state taxes are estimated to result from the PMA's ongoing museum operations and by spending of visitors.

Five-Year Construction Impacts in the Maine Economy

This analysis also estimated the economic impact from the capital expenditures on the proposed PMA Blueprint construction project under two local spending scenarios. In 2023 through 2027, the PMA estimates that it will cumulatively spend $52.1 million to construct the new 60,000 sq ft. building.

Under the first scenario, 50% of spending (i.e., $26.1M) is assumed to go to local construction companies. Including direct, indirect, and induced spending, the total impacts of the PMA's capital investment on new construction, include an estimated:

- 66 construction-related jobs per year (55 FTE)
- $17.4 million in associated labor income, and
- $49.5 million in total output (sales)

Under the second scenario, 60% of spending (i.e., $31.3M) is assumed to go to local construction companies. Including direct, indirect, and induced spending, the total impacts of the PMA's capital investment on new construction, include an estimated:

- 79 construction-related jobs per year (65 FTE)
- $20.8 million in associated labor income, and
- $59.4 million in total output (sales)

Importance of cultural amenities, community, and museum membership

Housing inventory – via the conversion of property from non-residential use to housing – is expanding in Southern Maine and downtown Portland, increasing residents and the pool of potential museum members.

The PMA's presence in downtown Portland in addition to the Blueprint project and other redevelopment and revitalization efforts underway improve the areas desirability and contribute to increased economic activity and population growth within the Portland and Greater Portland area.

Introduction & Methods

Introduction

Introduction & Methods

Situated near Congress Square in Portland Maine, the Portland Museum of Art (PMA) is part of the city's unique downtown Arts District that includes a mix of condos, apartment rentals, hotels, and local businesses. Not only does the PMA contribute to the local economy by generating sales and creating jobs, but it also contributes to the quality of life that Portland is known for as it serves the needs of residents, workers, and visitors, and invests money in redeveloping the area.

The PMA Blueprint is a $100M multi-year redevelopment and construction project funded in part under an ongoing capital fundraising campaign. Some of these investments will improve the existing structure and surrounding property and approximately $52M will be put towards the construction of a new 60,000 square foot building. By 2027, the PMA Blueprint project is expected to be complete, and the new facilities open to the public.

To quantify the Museums ongoing contributions and impacts resulting from its capital investments on new construction, the PMA commissioned the Center for Business and Economic Research (CBER) at the University of Southern Maine (USM) to conduct the following economic analysis.

The remaining section provides an overview of the economic trends shaping the region then describes estimation methods and data sources. The remaining report is structured into the following sections:

1) Pre-Expansion Snapshot (2019)
2) Post-Expansion Snapshot (2027)
3) Five-Year Construction Impacts in the Maine Economy
4) Technical Appendices

Map 1: The Portland Museum of Art located at 7 Congress Sq, Portland, ME



Image source: https://www.portlandmaine.com/explore-downtown/downtown-map/

Overview – *Economic and Demographic Trends*

Introduction & Methods

A general understanding of the underlying economic conditions and trends in a region provide important context when considering current and estimated impacts to the economy. Trends that impact consumer spending or influence a person's choice to visit or relocate to a city will have an impact on museum visitation and membership opportunities.

During the peak of the COVID-19 pandemic, stay at home orders and social distancing restrictions caused tourism-related spending to significantly drop. In 2020 and 2021, spending shifted from services to goods as travel, dining, and other indoor service activities halted. As of October 2022, expenditures on services have since increased to pre-pandemic levels. While this is good news, economic conditions in the short- and medium-term are highly uncertain, and there is an increased possibility of an economic slowdown in 2023.

Portland was listed as one of the 100 Best Places to Live in the US in 2022, based on a range of factors such as community amenities, education, sustainability, transportation, housing, and the economy. However, demographics and housing were among Portland's lowest ranking. Maine's aging demographic and resulting labor market conditions is a longstanding challenge, and the lack of housing stock and the high cost of existing housing is an ongoing concern.

Maine has the oldest population in the US by median age (44.7 years) and by percent of the population age 65+ (21.7%).[1] Over the next 10 years, the entire baby boomer cohort will surpass age 65 and reach retirement. It was typical for baby boomers to work beyond retirement age, but more have retired during the pandemic. At the same time there is a smaller population of youth and young adults in the state to replace them in the labor force and without higher rates of in-migration economic growth will be constrained. An older demographic will not negatively impact the number of people that visit the PMA, but labor force issues can impact both the museum and its local vender and supplier business operations. These issues can also impact the supply of local construction workers available to build the PMA's the new structure.

Recent population growth in Maine is ranked among the fastest in the nation. From 2020 to 2021 Maine's population increased by nearly 10,000 or 0.7%, for comparison, the US as a whole added around 400,000 people, an increase of 0.1%. Much of this growth was driven by in-migration that was strong enough to offset a natural decrease in population (i.e., when deaths outnumber births). In other words, more people moved to Maine during the pandemic. This was driven in part by an increase in remote work and people seeking locations that allow for work-life balance and access to outdoor recreation. The influx of people relocating to Maine is not a new trend but has increased since the pandemic. These trends are encouraging especially since the state needs more working-age people to sustain economic activity, but it is uncertain whether they will continue at the same rate in the future. There is opportunity for Maine to see continued increased in-migration in the coming years due to the latter trends, however housing – in addition to childcare and school availability for those with children – are possibly limiting factors.[2]

Housing costs have sharply increased over the past several years as demand far outpaced supply. Affordability is a particular concern as interest rates have spiked causing more potential buyers to be priced out of the market and make home mortgages more expensive. Higher home prices have contributed to higher rental prices; increases in the Portland and Greater Portland area have started to create a new 'high end' market especially in cities such as Westbrook, Biddeford, Gorham, Windham, Brunswick, and Lewiston. This trend was underway prior to the pandemic but demand has increased, and many higher end options are being purchased.

The need for more housing in general and more affordable options is a well-known issue in Portland and the Greater Portland area. From 2011 to 2020 the total number of housing units in Cumberland County increased by 5.7% (7,861) and in the Art District neighborhood where the PMA is located the number of housing units increased by 7% (142), but it is still not enough to keep up with demand.[3] The influx of people relocating to the state further constrains the housing supply and limits availability for ongoing migration.

[1] 2021 Population Estimates Program
[2] Maine State Economist
[3] Housing data from 2011-2015 American Community Survey (ACS) 5-Year and 2016-2020 ACS 5-Year Estimates.

Overview – *Downtown Redevelopment and Revitalization*

Introduction & Methods

Thriving and successful neighborhoods and downtowns provide a sense of place, a community. Cultivating community, as the PMA has done for over 140 years, impacts the economy as more people in the area results in improved business activity, increased property values, and expanded local tax base.

Think of quality of life as everything that makes a place worth calling home.

Within economic development, "quality of life" is measured with a complex balance of indicators such as infrastructure, jobs, education, healthcare, housing, and cultural amenities. A place, or a region with a high quality of life can provide its residents with everything they need and want to live and thrive. That is why improving quality of life increases desirability for a destination. It attracts and retains people, adds revenue, and boosts recognition and reputation.

Investments that contribute and improve quality of life and place can be more effective than traditional economic development tools such as business tax incentives to attract or retain employers or create a more "business-friendly" environment with lower taxes and labor costs. While traditional tools have value, community amenities such as recreational opportunities, cultural activities, and quality services may be larger contributors to a healthy local economy than traditional "business-friendly" measures.[4] Other quality of life factors such as good restaurants, access to open spaces and public spaces, good jobs, safety, and connection and mobility also attract (and retain) more people to an area to live, work, and play.

Housing & real estate development trends in Portland and the Greater Portland area

There are several housing developments and redevelopments currently under construction in Portland downtown, Bayside, and East Bayside neighborhoods in addition to revitalization projects. These projects will increase housing capacity and contribute to the quality of life the city has become known for, as well as have a positive impact on museum's membership opportunities.

Office building conversions in downtown Portland are bringing more housing inventory online as apartments, condos, and hotels. In 2021, at least two known buildings were sold in downtown Portland with plans to convert to residential, with two additional known for 2022, and more potential projects are under discussion.[5]

Housing-related redevelopment is underway in Portland to increase housing capacity, such as the updates to 50 Monument Square and the conversion of city's iconic Time & Temperature building to an 86-bed luxury hotel with a restaurant and rooftop bar, and meeting and retail spaces.

These are just a few examples of redevelopment projects in addition to the PMA Blueprint project and other revitalization efforts underway contributing to the areas increased desirability thus improving economic activity and population growth within the Portland and Greater Portland area.

[4] Ohio River Valley Institute. (2022) An Aggregate Approach to Estimating Quality of Life in Micropolitan Areas

[5] MEREDA 2022 Forecast Conference. Southern Maine Office Forecast, Nate Stevens, The Boulos Company

Estimation Methods & Data Sources

Introduction & Methods

The Portland Museum of Art (PMA) provided actual and projected annual operational data including payroll information and vendor/supplier spending, detailed visitation counts as well as portion of out-of-state visitors, and estimated construction spending for 2019 through to 2027. These data represent PMA's direct spending in the Maine economy and serve as inputs to estimate indirect and induced impacts statewide.

Data from the Maine Office of Tourism's (MOT) 2021 Economic Impact and Visitor Tracking Report and "Maine Museums: An Economic Impact Study, 2010" is used to develop trip assumptions, visitor segments, spending patterns, and estimate the portion of visitors that took a trip to Maine motivated by visiting the PMA. These data along with visitor counts provided by the PMA are used to estimate the total direct tourism-related expenditures (i.e., visitor purchases of goods and services including meals, hotels, transportation, etc. outside of the museum). Trip assumptions, visitor segments, and spending patterns for 2019 are used to estimate direct tourism-related expenditures for 2027. An estimated 25% of out-of-state museum visitors in 2019 took a trip to Maine motivated by visiting the PMA. In 2027, an estimated 35% of out-of-state museum visitors will take a trip to Maine motivated by visiting the PMA. These data reflect direct visitor spending and serve as inputs to estimate indirect, induced, and sometimes direct impacts (i.e., jobs and labor income) to the state.

The term "economic impact" and "economic contribution" are often used interchangeably but there are distinctions important for the reader to understand. The term "economic impact" of the PMA represents new spending in the economy, that is "but if not for" the PMA, the spending is assumed would not have occurred. On the other hand, "economic contribution" can be thought of as the entire footprint of the PMA to the Maine economy, it measures the support of the PMAs ongoing operations - that is money that is already circulating. The spending of tourists whose trip to Maine was motivated by visiting the PMA to browse its galleries, patronize a specific exhibition, or attend an event, and capital investments on new construction represent spending that would not have occurred but for the PMA.

Indirect and induced multiplier effects and some of the direct impacts are estimated by a Maine input-output model (IMPLAN, 2019 Data). IMPLAN is a regional economic analysis software application that is designed to estimate the impact or "ripple" effect of a given economic activity within a specific geographic area. For more information on the IMPLAN modeling process, visit IMPLAN.com. The impacts and contributions presented in this report are quantified and presented using common economic metrics including full-time equivalent employment (FTEs), workers, wages, total output (sales), and tax revenues. Only spending that takes place within Maine is included as stimulating the changes in economic activity. All economic impact and contribution figures are reported in current 2022 dollars.

A note on employment. Jobs or workers in IMPLAN represent average annual employment. To switch between FTE and IMPLAN jobs we use the 2020 546 FTE & Employee Compensation Conversion table. The factors used to switch between FTE to IMPLAN jobs and from IMPLAN jobs to FTE are as follows: 1 FTE is equal to 1.159 IMPLAN employees and 1 IMPLAN employee is equal to 0.831 FTE. Refer to the technical appendices for modeling output definitions and other key terminology used throughout the report.

Ongoing Museum Operations

Introduction & Methods

Since the onset of the COVID-19 pandemic in 2020, the PMA closed for several months due to emergency restrictions – involving state and local stay-at-home mandates coupled with physical distancing measures – enacted to limit the spread of the virus. In April and May of 2020 and January and February of 2021, the PMA was closed to visitors. During this time, the pandemic caused consumer spending to significantly contract as most people opted to stay home instead of going out and spending money on leisure activities. In particular, services that involved any kind face-to-face human interaction were affected the most. In 2019, over 170,000 individuals visited the PMA. When compared to visitation in 2019, levels were 67% lower in 2020 and 46% lower in 2021. The impacts of COVID-19 have lingered into 2022 but visitation has increased. As of September 2022, the PMA has welcomed over 97,000 visitors exceeding totals from 2020 and 2021. The number of museum visitors is expected to increase as more people continue to resume pre-pandemic activities. By 2027, the PMA estimates the number of museum visitors will nearly double from 2019 levels because of the increased capacity and attraction anticipated from its new facilities (Figure 1).

The COVID-related closures did not lead to a drop in the PMA operating expenses, in fact these costs slightly increased in 2020 and 2021 over 2019 levels. During this time, the Museum still needed to maintain its facilities and art collections and pay its employees. Many businesses had to layoff employees, but the PMA was able to retain and support its staff during these challenging times. Actual and projected operating costs, shown in Figure 2, include total personnel budget (with tax and benefits) and vendor/supplier spending. In 2019, approximately 69% of the operating budget was spent in Maine on local vender and supplier businesses and to pay workers' salaries, wages, and benefits. As the operating budget increases to support anticipated capacity so too will the PMA's share of local investments. By 2027, approximately 81% of the operating budget will be spent in Maine to purchase goods and services from local vendors/suppliers and pay employees.

Figure 1. Annual number of visitors (with future projections)

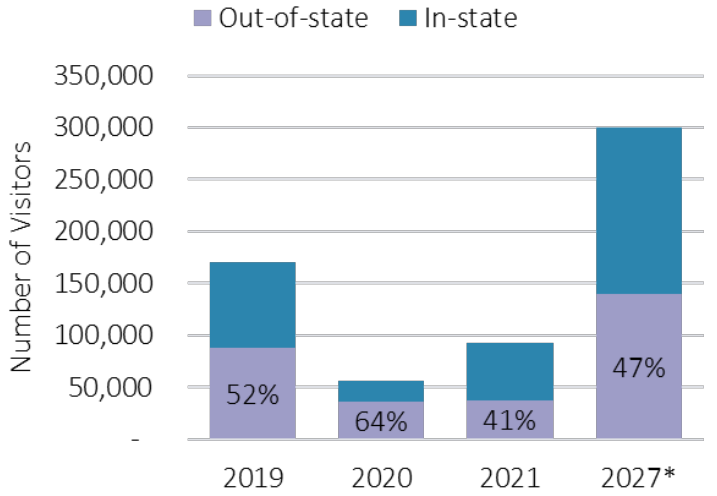

Figure 2. Annual operating costs (with future projections)

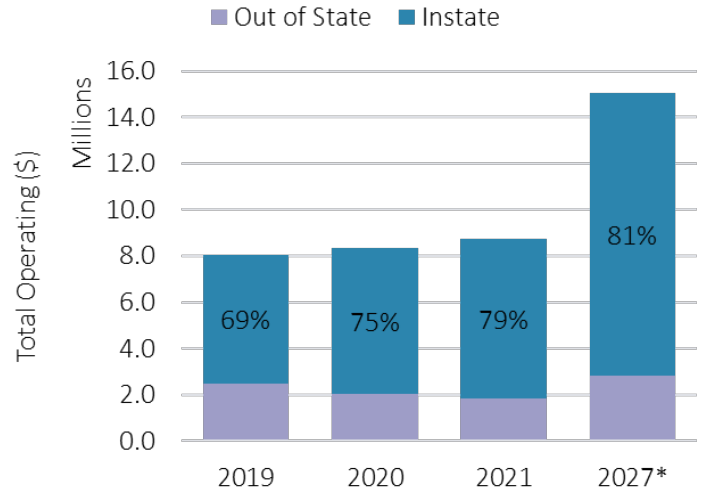

Note: Total operating cost includes personnel budget (with tax and benefits) and vendor/supplier spending.*Projections.

Visitor Estimates and Assumptions

Introduction & Methods

Number of Visitors. In 2019, the PMA welcomed over 170,000 visitors, 88,000 or 52% came from outside of Maine. Not all visitors came to Maine to specifically visit the PMA. An estimated 25% or 22,020 out-of-state visitors are estimated as museum-specific tourists whose trip to Maine was motivated by visiting the PMA to browse its galleries, patronize a specific exhibition, or attend an event (Table 1). By 2027, the PMA expects the facilities expansion to be complete and anticipates up to 300,000 annual visitors, 47% or 140,153 would come from out-of-state. Because the new facilities are expected to increase the museums physical capacity and draw new art attractions that in turn attract more visitors to the state, an estimated 35% of out-of-state visitors (i.e., 49,053) are estimated to be museum-specific tourists in 2027.

Table 1. Museum Visitors

	2019	2027
Total museum visitors	170,831	300,000
Tourists - trip to Maine motivated by visiting the PMA	22,020	49,053

Figure 3. Annual Museum Visitor Totals & Estimates

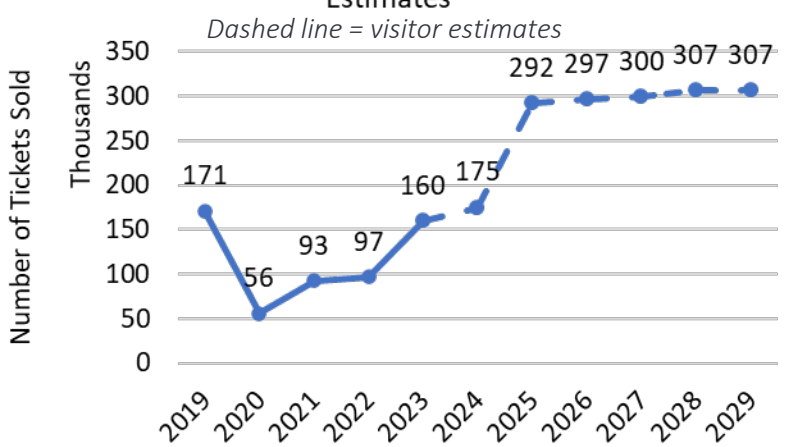

Visitor segments and trip assumptions. Not all visitors have the same spending patterns, some come for the day while others, for example, stay with friends and family or at a hotel. To account for these differences, out-of-state museum visitors – or museum tourists – are segmented into three groups. Two are based on the type of overnight accommodations, that is paid lodging (45%) and unpaid lodging (27%), and the third is day-trippers (28%) (Table 2). The average trip length for paid lodging visitors is 4 nights and non-paid overnight visitors is 5.7 nights. Visitor segments and trip assumptions are applied to both 2019 and 2027 museum tourist counts.

Table 2. Visitor Segments & Trip Assumptions

	Visitor Segments		
	Paid Overnight	Unpaid Overnight	Day
Average length of stay (nights)	4	5.7	0
Visitor segment (% of total)	45%	27%	28%

Visitor Spending and Assumptions

Introduction & Methods

Spending Patterns. Daily per person spending by visitor segment, shown in Table 3, is estimated from daily travel party spending figures reported by the MOT, and adjusted by findings from the Maine Museums report and the authors assumptions. Spending patterns in 2019 are comparable to those in 2021. Average travel party size, reported as 2.7, is used to convert daily travel party spending to daily per person spending. The average cost to purchase a ticket to the museum is assumed to be captured in the spending patterns shown in Table 3.

Direct tourism-related expenditures reflect visitor purchases of goods and services on meals, hotels, shopping, transportation, etc. from outside of the museum. To estimate the direct tourism-related spending of museum tourists, the average spending patterns by visitor segment, illustrated in Table 4, are multiplied by the number of visitors in each respective segment. Annual ticket sales estimated from these visitors of $178,512 in 2019 and $397,368 in 2027 are removed from total direct spending because this spending is technically captured within the museum effects. Since the number of out-of-state visitors is expected to increase from 88,078 in 2019 to 140,153 in 2027, a 59% increase, the assumption is that ticket sales will increase by approximately the same percentage.

Table 3. Daily Per Person Spending Patterns

	Visitor Segments		
Category	Paid Overnight	Unpaid Overnight	Day
Accommodations	$106	$0	$0
Food & beverage	$52	$56	$31
Recreation	$11	$13	$7
Retail shopping	$21	$36	$20
Transportation	$31	$17	$9
Total	**$221**	**$121**	**$67**

Table 4. Direct Tourism Spending

Category	2019	2027
Accommodations	$4,188,202	$9,330,144
Food & beverage	$4,171,069	$9,291,949
Recreation	$551,314	$1,228,475
Retail shopping	$1,832,872	$4,083,112
Transportation	$1,838,789	$4,096,300
Total	**$12,582,246**	**$28,029,981**

The Portland Museum of Art's Economic Contribution & Impact in Maine

Pre-Expansion Snapshot, 2019

This section reports the PMA's statewide economic contribution in 2019, a typical year before construction. The two major components of the economic contribution and impact stem from museum spending and visitor spending. The PMA pays its employees and spends money at local vendor/supplier businesses to maintain its ongoing operations while people from out-of-state who come to Maine to visit the Museum spend money on retail goods, meals, hotels, and other items outside of the museum. This constitutes the initial or direct spending. The local businesses use a portion of their revenues to purchase supplies, equipment, and employ workers. Employees of the PMA and its vendors, in turn, spend their earnings in the local economy on household consumption goods including food, entertainment, housing and other goods and services adding value along the way. This results in recurring rounds of local economic spending, this is referred to as the indirect and induced economic impacts, which are estimated by a Maine economic model (IMPLAN) and presented in the following section.

Museum Spending Effects in the Maine Economy

Pre-Expansion Snapshot, 2019

The PMA contributes to the Maine economy through three types of impacts: direct (initial sale or spending) and indirect and induced, which account for the ripple effects of multiple rounds of spending in the economy. These contributions are quantified and presented, in Table 5, using common economic metrics including workers/FTE, labor earnings, and total output.

In 2019, approximately 69% of the PMA's direct operating costs were spent in Maine on local vender and supplier businesses ($1,156,000) and to pay museum employees ($4,379,035). These operating activities are estimated to support an additional 8 indirect workers, $335,983 (in 2022 dollars) in indirect labor income, and $1.4 million in indirect output.

Including direct, indirect, and induced spending, the total impacts of the PMA's ongoing operational spending, include an estimated 129 jobs (i.e., 107 FTE), $6.3 million in associated labor income, and $11.5 million in total output (sales).

Table 5. Contribution of the Operation of PMA to the Maine Economy, 2019

in 2022 dollars

Impact	FTE	Labor Income	Output / Sales	Workers
Direct	76	$ 4,559,603	$ 5,763,270	92
Indirect	7	$ 335,983	$ 1,408,376	8
Induced	24	$ 1,369,320	$ 4,291,359	29
Total Impact	**107**	**$ 6,264,905**	**$ 11,463,004**	**129**

Note: The Portland Museum of Art (PMA) provided actual and projected operational spending data, including employee compensation and local business vendor/supplier spending. Full-time equivalent (FTE) values provided by PMA are converted to IMPLAN employment prior to using it as an input to the model. Results do not include impacts of construction or visitor spending. Figures are reported in current 2022 dollars. The multiplier is 1.99.

Assumptions: In 2019, 32% of total local venders/suppliers spending (i.e., $1,156,000) went to Maine businesses. This figure along with total employee compensation ($4,379,035) and number of employees (92) are used to estimate indirect and induced spending.

Visitor Spending Effects

Pre-Expansion Snapshot, 2019

In 2019, an estimated 22,020 tourists took a trip to Maine motivated by visiting the PMA, these tourists spent an estimated $12.6 million on lodging, meals, shopping, transportation, etc. from outside of the museum. This direct spending supports indirect and induced effects generated by sales to tourism-related businesses in the hospitality sectors that in turn purchase goods and services from other Maine businesses and pay their employees who then spend their wages on household goods and services in Maine. Indirect and induced activity support an additional 52 jobs, $2.5 million (in 2022 dollars) in labor income, and $8.1 million in output.

Including direct, indirect and induced spending, the total impacts of visitor spending, include an estimated 180 jobs (i.e., 150 FTE), $6.3 million in associated labor income, and $18.3 million in total output (Table 6).

Table 6. Economic Impact of Visitor Spending to the Maine Economy, 2019

in 2022 dollars

Impact	FTE	Labor Income	Output / Sales	Workers
Direct	106	$ 4,095,696	$ 10,192,076	128
Indirect	18	$ 1,084,347	$ 3,536,575	22
Induced	25	$ 1,453,745	$ 4,553,370	30
Total Impact	**150**	**$ 6,633,789**	**$ 18,282,021**	**180**

Note: Results do not include impacts of construction or museum spending. Figures are reported in current 2022 dollars. Estimated direct spending in narrative does not equal direct spending reported in table due to leakages resulting from the difference in the prices paid by the consumer and the actual price of the product purchased. For more information refer to the technical appendices. The multiplier is 1.79.

The Economic Contribution & Impact of the PMA in Maine

Pre-Expansion Snapshot, 2019

The total economic contribution of the PMA in 2019 is the sum of the business activity directly associated with operations of the PMA and the spending of tourists whose trip to Maine was motivated by visiting the PMA.

In 2019, museum and tourism spending supported:

- Over 300 jobs of which 220 were direct impacts and another 89 were supported through indirect and induced spending.
- $8.7 million in direct labor income which supported an additional $4.2 million in indirect and induced impacts.
- Generated a total of $29.8 million in total output of which $16M were from the initial direct spending which supported another $13.8M in indirect and induced impacts.

Table 7. Contribution of Museum & Visitor Spending, 2019

in 2022 dollars

Impact	FTE	Labor Income	Output / Sales	Workers
Direct	183	$ 8,655,299	$ 15,955,346	220
Indirect	25	$ 1,420,330	$ 4,944,950	30
Induced	49	$ 2,823,065	$ 8,844,728	59
Total Impact	**257**	**12,898,693**	**29,745,025**	**309**

Notes: Results include the impacts and contribution of visitor or museum spending.

Tax Impacts

Pre-Expansion Snapshot, 2019

The economic activity generated by the PMA's ongoing museum operations and by spending of visitors on retail goods, meals, hotels, and other taxable items support fiscal impacts in the form of tax revenues from income, sales, and other tax collections. These result from taxes on wages and salaries paid by the PMA and by tourism-related businesses, in addition to taxes on wages and salaries from the indirect and induced jobs. In 2019, these economic activities generated an estimated $1.9 million in local and state tax revenue in the Maine economy (Table 8).

Table 8. Fiscal Contribution of Museum & Visitor Spending, 2019

in 2022 dollars

Impact	Local	State	Total
Direct	$ 422,580	$ 626,876	$ 1,049,456
Indirect	$ 98,310	$ 136,414	$ 234,724
Induced	$ 265,709	$ 322,930	$ 588,639
Total Impact	**$ 786,599**	**$ 1,086,219**	**$ 1,872,819**

Notes:
Assumptions:

$1.9 million in local and state taxes in 2019

In 2019, $786,599 in local and $1.1 million in state taxes are estimated to result from the PMA's ongoing museum operations and by spending of visitors.

Five-Year Construction Impacts in the Maine Economy

The PMA Blueprint Project, 2023-2027

In 2023 through 2027, the PMA estimates that it will cumulatively spend $52.1 million on its new facilities expansion. This section reports the one-time economic impact from the PMA's capital expenditures on the proposed PMA Blueprint project in Maine under two local spending scenarios.

Five-Year Construction Impacts in the Maine Economy – 50/50

The PMA's Blueprint project, 2023-2027

In 2023 through 2027, the PMA estimates that it will cumulatively spend $52.1 million for (new) construction. Under the first scenario, 50% of spending (i.e., $26.1M) is assumed to go to local construction companies, construction activities for this period are estimated to support 37 total direct construction-related jobs per year (i.e., 31 FTEs) and $10 million (in 2022 dollars) in direct labor income.

Including direct, indirect and induced spending, the total impacts of the PMA's capital investment on new construction, include an estimated:

- 66 construction-related jobs per year (55 FTE)
- $17.4 million in associated labor income
- $49.5 million in total output (sales)

For every $100 of the PMA spends on new construction, an additional $90 is generated elsewhere in the local economy.

Labor income and output reported in Table 9 is the combination of the impacts across the five years, reported in 2022 dollars. The number of workers and FTEs is reported in terms of average annual jobs and FTEs (i.e., jobs/year and FTE/year) for the project. This is because the jobs on the construction site are not cumulative, in the same way that an employee working a job for 5 years is not viewed as 5 jobs.

Table 9. Economic Impact from New Construction Spending, 5-year period (50/50 Scenario)

in 2022 dollars

Impact	Average Annual FTE	Labor Income	Output / Sales	Average Annual Workers
Direct	**31**	**$ 9,998,223**	**$ 26,059,000**	**37**
Indirect & Induced	24	$ 7,351,350	$ 23,477,917	29
Total Impact	**55**	**$ 17,349,573**	**$ 49,536,917**	**66**

Notes: The Portland Museum of Art (PMA) provided construction cost estimates. Capital expenditures are analyzed independently from the PMA's business operations as these are one-time purchases. Results reflect total economic impact from spending on the one-time construction project that is expected to take place over a five-year period from 2023 to 2027. Figures reported in current 2022 dollars. The multiplier is 1.9.

Five-Year Construction Impacts in the Maine Economy – 60/40

The PMA's Blueprint project, 2023-2027

Under the second scenario, 60% of spending (i.e., $31.3M) is assumed to go to local construction companies, construction activities for this period are estimated to support 45 total direct construction-related jobs per year (i.e., 37 FTEs) and $12 million (in 2022 dollars) in direct labor income. Including direct, indirect and induced spending, the total impacts of the PMA's capital investment on new construction, include an estimated:

- 79 construction-related jobs per year (65 FTE)
- $20.8 million in associated labor income, and
- $59.4 million in total output (sales)

Labor income and output reported in Table 10 is the combination of the impacts across the five years, reported in 2022 dollars.

Table 10. Economic Impact from New Construction Spending, 5-year period (60/40 Scenario)

in 2022 dollars

Impact	Average Annual FTE	Labor Income	Output / Sales	Average Annual Workers
Direct	37	$ 11,997,868	$ 31,270,800	45
Indirect & Induced	28	$ 8,821,620	$ 28,173,500	34
Total Impact	**65**	**$ 20,819,487**	**$ 59,444,300**	**79**

Notes: The Portland Museum of Art (PMA) provided construction cost estimates and share of local spending estimates. Capital expenditures are analyzed independently from the PMA's business operations as these are one-time purchases. Results reflect total economic impact from spending on the one-time construction project that is expected to take place over a five-year period from 2023 to 2027. Figures reported in current 2022 dollars. The multiplier is 1.9

The Portland Museum of Art's Economic Contribution & Impact in Maine

Post Expansion Snapshot, 2027

By 2027, the multi-year redevelopment and construction project is expected to be complete, and the new facilities open to the public. The new facilities are anticipated to increase the PMAs physical capacity, it will have more space to host events, display more and higher quality exhibits and in turn attract more visitors. This section provides a snapshot of the PMA's economic contribution in 2027 as a result of the estimated increase in operational spending and increased visitor attraction and spending.

Museum Spending Effects in the Maine Economy

Post Expansion Snapshot, 2027

Approximately 81% of the PMA's direct operating costs will be spent in Maine on local vender and supplier businesses ($2,600,000) and to pay museum employees ($9,640,000), in 2027. These operating activities are estimated to support an additional 17 indirect jobs, $713,871 (in 2022 dollars) in indirect labor income, and $3.1 million (in 2022 dollars) in indirect output.

Including direct, indirect, and induced spending, the total impacts of the PMA's anticipated increase in operational spending, include an estimated 216 jobs (i.e., 180 FTE), $13.3 million in associated labor income, and $24.4 million in total output (sales).

Table 11. Contribution of the Operation of PMA to the Maine Economy, 2027

in 2022 dollars

Impact	FTE	Labor Income	Output / Sales	Workers
Direct	115	$ 9,640,000	$ 12,240,000	138
Indirect	14	$ 713,871	$ 3,051,006	17
Induced	51	$ 2,903,075	$ 9,098,032	61
Total Impact	**180**	**$ 13,256,946**	**$ 24,389,038**	**216**

Note: The Portland Museum of Art (PMA) provided actual and projected operational spending data, including employee compensation and local business vendor/supplier spending. Full-time equivalent (FTE) values provided by PMA are converted to IMPLAN employment prior to using it as an input to the model. Results do not include impacts of construction or visitor spending. Figures are reported in current 2022 dollars.

Assumptions: By 2027, the PMA estimates that 48% of total venders/suppliers spending (i.e., $2,600,000) will go to Maine businesses. This figure along with projected employee compensation ($9,640,000) and number of employees (138) are used as model indirect and induced spending.

Visitor Spending Effects

Post Expansion Snapshot, 2027

In 2027, an estimated 49,053 tourists will take a trip to Maine motivated by visiting the PMA. These visitors will spend an estimated $28 million for lodging, meals, shopping, transportation, etc. from outside of the museum. Indirect and induced impacts are estimated to support an additional 117 jobs, $5.7 million (in 2022 dollars) in labor income, and $18.1 million in output.

Including direct, indirect, and induced spending, the total impacts of visitor spending, include an estimated 405 jobs (i.e., 336 FTE), $14.9 million in associated labor income, and $40.9 million in total output (sales).

Table 12. Economic Impact of Visitor Spending to the Maine Economy, 2027

in 2022 dollars

Impact	FTE	Labor Income	Output / Sales	Workers
Direct	239	$ 9,174,087	$ 22,805,766	288
Indirect	40	$ 2,421,710	$ 7,898,630	48
Induced	57	$ 3,254,228	$ 10,192,750	68
Total Impact	**336**	**$ 14,850,025**	**$ 40,897,146**	**405**

Note: Estimated direct spending in narrative does not equal direct spending reported in table due to leakages resulting from the difference in the prices paid by the consumer and the actual price of the product purchased. For more information refer to the technical appendices. Results do not include impacts of construction or museum spending. Figures are reported in current 2022 dollars.

The Economic Contribution & Impact of the PMA in Maine

Post Expansion Snapshot, 2027

The total economic contribution is the sum of the museum spending effects and visitor spending effects previously reported. In 2027, the estimated museum and tourism spending will support:

- Over 600 jobs of which 426 were direct impacts and another 195 were supported through indirect and induced spending.
- $18.8 million in direct labor income which supported an additional $9.3 million in indirect and induced impacts.
- Generated a total of $65.3 million in total output of which $35M were from the initial direct spending which supported another $30.2M in indirect and induced impacts.

Table 13. Estimated Contribution of Museum & Visitor Spending, 2027

in 2022 dollars

Impact	FTE	Labor Income	Output / Sales	Workers
Direct	354	$ 18,814,087	$ 35,045,766	426
Indirect	55	$ 3,135,581	$ 10,949,636	66
Induced	107	$ 6,157,303	$ 19,290,782	129
Total Impact	**516**	**28,106,971**	**65,286,184**	**621**

Notes: Results include the impacts and contribution of visitor or museum spending.

Tax Impacts

Pre and post expansion

By 2027, the economic activity supported by the PMA's ongoing museum operations and by spending of museum tourists is estimated to generate $4.2 million in local and state tax revenues (Table 14).

Table 14. Fiscal Contribution of Museum & Visitor Spending, 2027

in 2022 dollars

Impact	Local	State	Total
Direct	$ 948,844	$ 1,423,457	$ 2,372,301
Indirect	$ 218,499	$ 325,349	$ 543,848
Induced	$ 579,512	$ 747,096	$ 1,326,607
Total Impact	**$ 1,746,855**	**$ 2,495,901**	**$ 4,242,757**

Notes:
Assumptions:

$4.2 million in local and state taxes in 2027

In 2027, $1.7 million in local and $2.5 million in state taxes are estimated to result from the PMA's ongoing museum operations and by spending of visitors.

Technical Appendices

Definitions of Modeling Outputs & Other Key Terms

Technical Appendices

Key word	Definition
Direct effects	The expenditures or initial production changes associated with an industry or sector in the study area which are entered into the Input-Output analysis.
Economic contribution	Economic 'contribution' measures the support of an existing business, event or policy that is money that is already circulating, it is the gross change in economic activity associated with a business, event, or policy in an existing regional economy.
Economic impacts	Economic 'impacts' are to the local economy by exits or entry-related events, "but if not for", is the net changes in new economic activity associated with an industry, event, or policy in an existing regional economy.
Employee compensation	Total payroll cost of an employee, inclusive of wages, salaries, payroll taxes, and benefits such as health insurance and retirement.
Employment	The number of full-time, part-time, and seasonal jobs associated with a specific industry.
Full-time equivalent employment (FTEs)	Full-time equivalent employment (FTEs) is the number of full-time equivalent jobs, defined as total hours worked divided by average annual hours worked in full-time jobs.
Indirect effects	The economic impact of local industries purchasing goods and services from other industries along supply chains.
Induced effects	The economic impact of household spending of labor income following deductions from taxes, savings, and income for commuting.
Labor income	The sum of employee compensation and proprietor income.
Multipiliers	The measure of an industry's connection to the economy of Maine in terms of purchases, payments of wages and taxes, and other transactions.
Output	The value in dollars of production within Maine. It equates to the total of sales and net inventory change.
Total effects	The sum of direct, indirect, and induced effects.
Workers	Employment or workers is the total number of full-time, part-time, and seasonal jobs

END

The PMA Blueprint

Building a Landmark for the Future

A once-in-a-lifetime museum expansion and unification that will forever change Maine and New England. Through The PMA Blueprint, we will redefine our region, unite our communities, and sustain our economy for generations to come.

In a region traditionally renowned for its natural beauty and cuisine, the PMA has a new vision defined by arts, culture, belonging, and sustainability. To get there will require innovative thinking that goes "beyond the brick," and into the very nature of what a museum can be.

We believe the museum can transcend convention and redefine the quintessential Maine experience. **We understand** that the PMA, through investment in art and the facilities that bring that art to the public, can initiate a transformative new chapter for our region, one defined by growth and prosperity. **And we know** the time is now to embark on this profound and permanent shift forward.







THE CHALLENGE

For the last half decade, we've sustained double-digit increases in attendance, reaching a record high in 2019 with nearly 177,000 visitors. Our campus is at its limit, with attendance already at 2x the planned capacity of the Payson building. **In just 5 years, we will exceed 3x the planned capacity of our campus.** We need to build up, as we are being forced to make tough choices around reducing exhibition size, relocating programs, and restricting capacity due to the physical limitations of our campus.

Our collection has also grown exponentially, and **in the last decade alone has diversified deliberately and more quickly than at any point in our 140-year history**. Significant gifts from Judy Glickman Lauder, the Alex Katz Foundation, Barbara Goodbody, Richard Estes, Bruce Brown, David and Eva Bradford, the Berger Collection Educational Trust, and many more are transforming the PMA collection and expanding the narratives we can tell. Recently acquired works by Laura Aguilar, Rackstraw Downes, Nan Goldin, Philip Guston, Reggie Burrows Hodges, Carrie Mae Weems, Kara Walker, and others deserve space to store, care for, and present them–yet our existing facilities are insufficient and inadequate by modern standards.

And our communities have changed as well. We must do more to create opportunity–on our walls, in our galleries, through our programs, on our board, and within our staff–to ensure the PMA experience reflects the experiences, lifestyles, and values of the myriad people who call our region home and visit from around the world. We must platform individuals and communities that have been excluded from museums and "the art world". We must ensure our artwork, exhibitions, programs, and didactics are created by and in partnership with our BIPOC communities, immigrants and new Mainers, LGBTQIA2S+ neighbors, our elders, youth, and other communities across Maine. We must be at the center of our communities, which requires dialogue, trust, and transparency. And we must ensure we are championing a more diverse, inclusive, and sustainable region. **We must become a community institution that is rooted in *belonging*.**



A LEADER IN OUR REGION, KEYSTONE IN OUR COMMUNITIES, AND CATALYST FOR OUR ECONOMY

From the museum's founding in 1882 by artists and community leaders, to Charles Shipman Payson's gift of 17 works by Winslow Homer and the opening of our Payson building 40 years ago, to our present-day status as a cultural leader, the PMA's impact is greatest when we open doors for audience engagement, identify opportunities to grow our collection and unify our campus, and create space to come together.

Nearly a decade ago, the PMA prioritized diversity, equity, accessibility, and inclusion throughout our exhibitions, programs, events, and culture of philanthropy. In the years since, we have cultivated a broader, more detailed, and nuanced understanding of what these ideas mean, dedicating ourselves to the concepts of belonging, sustainability, our mission–*Art for All*–and values of courage, equity, service, sustainability, and trust.

In October 2019, the PMA took a big step toward a bold future, purchasing 142 Free Street, a building directly adjacent to the museum's Charles Shipman Payson Building. In a rapidly evolving city, this purchase provides the museum with a footprint for future opportunities and enables the PMA to define Portland as a national center for arts and culture.

With the opportunities of 142 Free Street, the development of Congress Square (a major, underdeveloped urban park at the main entrance of the museum) and the domino effects of renewal across our campus at sites like the Payson Building, Spring Street lot, and more, now is the time to unify the campus and thoughtfully plan the museum's future. We envision our campus as an environmentally sustainable gathering place where a strong artistic vision drives conversation, creativity, and cultural vibrancy.

This investment will embody our *Art for All* and sustainability values, with 142 Free Street being the first sustainable and green public building in Portland and just the fourth green public museum building in the country. The mass timber structure will include flexible and open-ended spaces, including classrooms to learn and get messy, workshops, artist residencies, performance spaces, and many more versatile areas for collaborations, partnerships, and connection. This is all in addition to innovative galleries and ways to present art that are at the heart of a museum.

This new, iconic, and architecturally significant center will be the hallmark of a unified and renewed campus–enhancing the PMA's mission, welcoming visitors from around the corner and across the world, and encouraging meaningful connections with artworks, programs, and events.

LEVER ARCHITECTURE & THE CONCEPT

In January, the Portland Museum of Art announced LEVER Architecture (Portland, OR and Los Angeles, CA) to lead the design team for ***The PMA Blueprint***. LEVER Architecture's winning concept imagines the PMA campus unified through a stunning and sustainable building that connects directly to the PMA's Postmodern-style Charles Shipman Payson Building (1983), Beaux-arts style Lorenzo De Medici Sweat Memorial Galleries (1911), Federalist-style McLellan House (1801), and Greek revival Clapp House (1832.) The design–proposed primarily from sustainable mass timber, one of LEVER's defining characteristics–reflects LEVER's understanding of the PMA's values and goals, as well as the history and future of Portland, of Maine, and of the region.

LEVER envisions a new building at the site of 142 Free Street made from mass timber, terracotta, and glass, and includes nods to Maine communities, history, and culture. The curved roofline is designed to frame the sun as it rises and sets, in honor of Maine's Wabanaki communities (Abenaki, Maliseet, Micmac, Passamaquoddy, and Penobscot Nations) and the land they call Wabanaki, or Dawnland. The timber used in LEVER's design speaks to the state's lumber industry heritage while reimagining its future as a hallmark of environmental stewardship, much in the same way the PMA's other buildings embody their time and place and reflect other aspects of Maine's history. Other sustainable building materials and practices, such as geothermal energy, will be explored as the project moves into future phases.

LEVER Architecture and their team of Simons Architects and Unknown Studio, Chris Newell-Akomawt Educational Initiative, Openbox, Once-Future Office, Atelier Ten, and Studio Pacifica were selected through a juried international design competition that attracted submissions from 104 teams representing 20 countries, including Australia, Belgium, China, Denmark, Finland, Japan, Mexico, Spain, South Korea, United Arab Emirates, the United Kingdom, and more. In total, more than 250 firms participated as part of the 104 submitting teams, with 46% of all lead firm submissions owned or founded by people of color or women.

Additionally, the Jury considered feedback from the public, who submitted more than 2,000 ideas, questions, and comments to the PMA during the concept gallery display November 18–December 31. Opportunities for community feedback have been critical to the PMA throughout its campus planning and ***The PMA Blueprint*** process, and in addition to the public comment period this winter have included focus groups, listening sessions, and surveys to ensure the future development of the museum's campus is defined by and rooted within the communities it serves.

In the months since the announcement, the LEVER team has frequently been to Maine to meet with, interview, and learn from our communities. These pre-planning moments with visitors, staff, and stakeholders are the initial steps to refine the concepts that will ultimately become the final design for the new PMA.

DOUBLING OUR ECONOMIC IMPACT

The Portland Museum of Art's contributions to Maine's economy are already significant, with $29.8 million in total output, $8.7 million in direct labor income supporting an additional $4.2 million in indirect and induced impacts, and $12 million in direct tourism-related expenditures. In 2022, The Maine Center for Business and Economic Research at The University of Southern Maine (USM) found that ***The PMA Blueprint*** could effectively double its impact at the completion of the project.

This is because investments that contribute to and improve quality of life can be more effective economic development tools than traditional strategies such as business tax incentives. Community amenities including recreational opportunities and cultural activities may be larger contributors to a healthy local economy than more narrowly focused "business-friendly" measures. A range of easily accessible open spaces and public gathering spots that promote community connections, restaurants, jobs, and safety have proven to attract–and retain–newcomers to an area to live, work, and play.

USM's analysis also estimated the economic impact from the capital expenditures on the proposed PMA Blueprint construction project. Between 2023 through 2027, the PMA estimates that it will cumulatively spend more than $60 million to construct the new building. Including direct, indirect, and induced spending, the total impacts of the PMA's capital investment on new construction, include an estimated: 66 - 79 construction-related jobs per year, $17.4 - $20.8 million in associated labor income, and $49.5 - $59.4 million in total output (sales).

MASS TIMBER'S POTENTIAL FOR MAINE

The Portland Museum of Art sees even more potential for economic development beyond Portland, extending throughout Maine's rural and urban communities, invigorating local economies, revitalizing communities, and sparking new industries and revenue streams.

This spring, the Portland Museum of Art was the sole arts institution at the International Mass Timber Conference in Portland, Oregon, among 3,000 attendees from 20 countries. Yet, we were welcomed with open arms and told time and again that ***The PMA Blueprint*** is the bellwether this emerging industry has been waiting for. That's because our project can demonstrate the benefits of mass timber beyond raw materials and processes.

One of the key benefits of mass timber construction is its ability to sequester carbon, retaining it in the building rather than being released back into the atmosphere through decomposition or burning. When wood that is used for mass timber construction is obtained from sustainably managed forests, the resulting materials have a much lower life-cycle carbon footprint than steel and concrete, delivering a 26.5% reduction in global warming potential, according to University of Washington researchers. That is incredibly significant, as the building sector produces an extraordinary 40% of global carbon emissions annually. The most common forms of mass timber include cross-laminated timber (CLT), Glue Laminated beams, Structural Round Timber (SRT), and laminated veneer lumber (LVL). No matter the type, all mass timber is incredibly strong, climate safe, and sustainable.

Maine almost had a CLT plant in 2018 but lost the bid to a site in the south that is now a profitable economic driver in Alabama. In our preplanning for our building, we're discovering a shared desire and drive for a CLT plant in Maine by our policymakers at all levels, the University of Maine, Indigenous leaders, landowners, forestry advocates, businesses, and more. Why? Because mass timber in Maine just makes sense. We're the most forested state in the country–with nearly 90% of the land covered in forests, the potential to revitalize and reimagine our state is real. This is a rare and unique opportunity to bring rural and urban communities, companies, and governments together through clean industries that make the world better and support Maine jobs.

The time is now to incentivize mass timber as a go-to building material to maximize long-lasting and positive outcomes for our economies and environment. We are excited to partner with LEVER Architecture and lead by example through our new, landmark building, but we need others to embrace regenerative, climate-safe wood products and processes as well. Together, we can support a better future, one that leads sustainably while fostering the people, communities, and industries that could revitalize and reimagine our state and New England as a whole.

JOIN US

Beginning today, we can renew, revitalize, and redefine a museum's role within our society.

With your partnership and support, we can manifest a model for all museums: one defined by leadership, courage, sustainability, and belonging.

The PMA you help to establish will strengthen our societal fabric and affirm that museums are critical to the health of our communities in all ways.

Together, we can realize the true potential of museums for all people.

MUSEUMS NEED A PARADIGM SHIFT THAT DELIVERS ON THE PROMISE OF *ART FOR ALL.*

Art reflects culture defines community **centers** region attracts visitors create energy galvanizes support activates vision inspires giving diversifies collections display beauty sparks imagination spurs conversation poses ideas foster growth requires capacity unifies campus welcomes **community** defines culture reflects art. **Art** reflects culture defines community **centers** region attracts visitors create energy galvanizes support activates vision inspires giving diversifies collections display beauty sparks imagination spurs conversation poses ideas foster growth requires capacity unifies campus welcomes **community** defines culture reflects art. **Art** reflects culture defines community **centers** region attracts visitors create energy galvanizes support activates vision inspires giving diversifies collections display beauty sparks imagination spurs conversation poses ideas foster growth requires capacity unifies campus welcomes **community** defines culture reflects art. **Art** reflects culture defines community **centers** region attracts visitors create energy galvanizes support activates vision inspires giving diversifies collections display beauty sparks **imagination** spurs conversation poses ideas foster growth requires capacity unifies campus welcomes **community** defines culture reflects art. **Art** reflects culture defines community **centers** region attracts visitors create energy galvanizes support activates vision inspires giving diversifies collections display beauty sparks **imagination** spurs conversation poses ideas foster growth requires capacity unifies campus welcomes **community** defines culture reflects art. **Art** reflects culture defines community **centers** region attracts visitors create energy galvanizes support activates vision inspires giving diversifies collections display beauty sparks imagination spurs conversation poses ideas foster growth requires capacity unifies campus welcomes **community** defines culture reflects art. **Art** reflects **culture** defines community **centers** region attracts visitors create energy galvanizes support activates vision inspires giving diversifies collections display beauty sparks imagination spurs conversation poses ideas foster growth requires capacity unifies campus welcomes **community** defines culture reflects art. **Art** reflects culture defines community **centers** region attracts visitors create energy galvanizes support activates vision inspires giving diversifies collections display beauty sparks imagination spurs conversation poses ideas foster growth requires capacity unifies campus welcomes **community** defines culture reflects art. **Art** reflects culture defines community **centers** region attracts visitors create energy galvanizes support activates vision inspires giving diversifies collections display **beauty** sparks imagination spurs conversation poses ideas foster growth requires capacity unifies campus welcomes **community** defines culture reflects art. **Art** reflects culture defines community **centers** region attracts visitors create energy galvanizes support activates vision inspires giving diversifies collections display beauty sparks imagination spurs conversation poses ideas foster growth requires capacity unifies campus welcomes **community** defines culture reflects art. **Art** reflects culture defines community **centers** region attracts visitors create energy galvanizes support activates vision inspires giving diversifies collections display beauty sparks imagination spurs conversation poses ideas foster growth requires capacity unifies campus welcomes **community** defines culture reflects art. **Art** reflects culture defines community **centers** region attracts visitors create energy galvanizes support activates vision inspires giving diversifies collections display beauty sparks imagination spurs conversation poses

This paradigm shift enables the PMA to be a leader of our region, a keystone for our communities, and a catalyst for our economy.

Art reflects culture defines community **centers** region attracts visitors create energy galvanizes support activates vision inspires giving diversifies collections display beauty sparks imagination spurs conversation poses ideas foster growth requires capacity unifies campus welcomes **community** defines culture reflects art. **Art** reflects culture defines community **centers** region attracts visitors create energy galvanizes support activates vision inspires giving diversifies collections display beauty sparks imagination spurs conversation poses ideas foster growth requires capacity unifies campus welcomes **community** defines culture reflects art. **Art** reflects culture defines community **centers** region attracts visitors create energy galvanizes support activates vision inspires giving diversifies collections display beauty sparks imagination spurs conversation poses ideas foster growth requires capacity unifies campus welcomes **community** defines culture reflects art. **Art** reflects culture defines community **centers** region attracts visitors create energy galvanizes support activates vision inspires giving diversifies collections display beauty sparks **imagination** spurs conversation poses ideas foster growth requires capacity unifies campus welcomes **community** defines culture reflects art. **Art** reflects culture defines community **centers** region attracts visitors create energy galvanizes support activates vision inspires giving diversifies collections display beauty sparks **imagination** spurs conversation poses ideas foster growth requires capacity unifies campus welcomes **community** defines culture reflects art. **Art** reflects culture defines community **centers** region attracts visitors create energy galvanizes support activates vision inspires giving diversifies collections display beauty sparks imagination

BEYOND THE BRICK

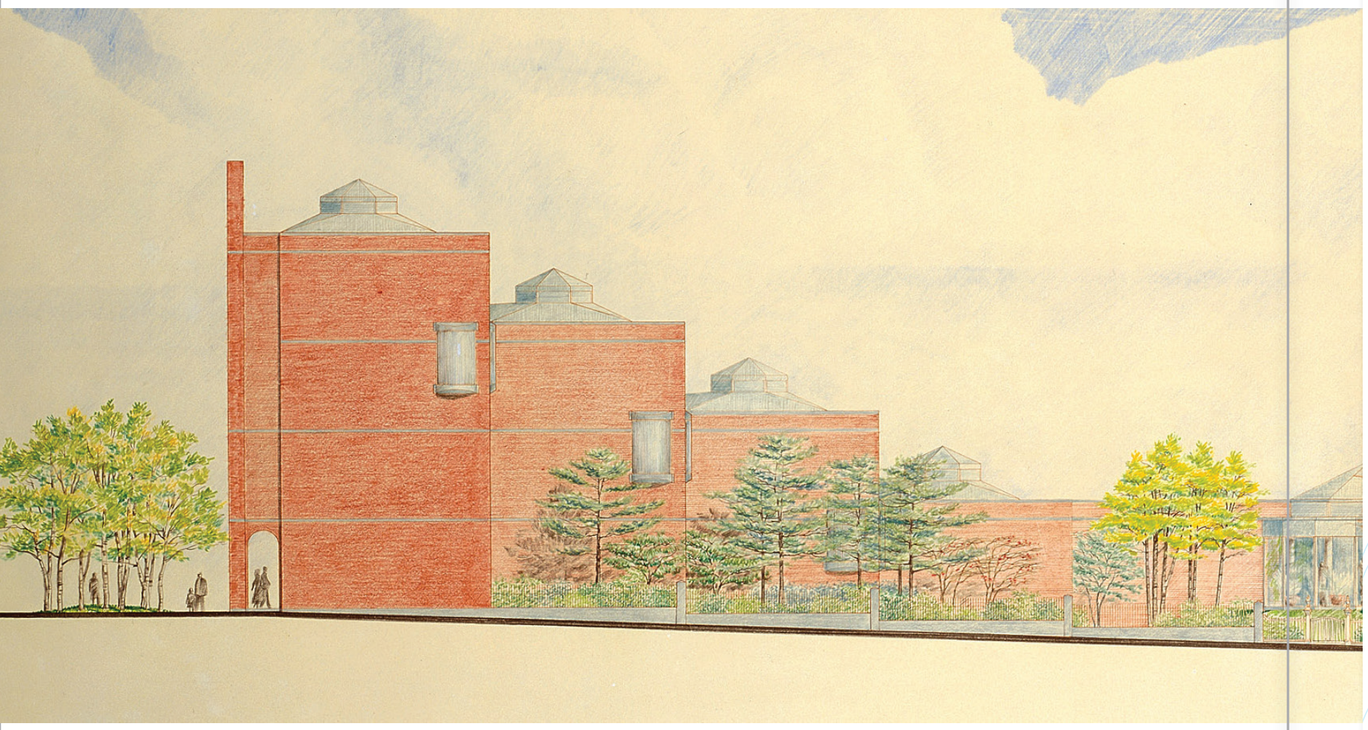

CONTENTS:

History	8
Collections	16
Needs	20
Solutions	22
Campus	24

The PMA's impact is greatest when we open doors for audience engagement and identify opportunities to grow our collection and unify our campus.

The Portland Museum of Art is defined by three pillars: community, collection, and campus. Working in tandem, these pillars have been the foundation of every milestone of the museum's incredible history. From the museum's founding in 1882 by artists and community leaders, to Charles Shipman Payson's gift of 17 works by Winslow Homer, to the opening of its Payson building one hundred years later, and to its present-day status as a cultural leader, the PMA's success has been grounded by one of these three pillars.

Now, sparked by the current growth and diversification of the collection, record attendance and community feedback, and new opportunities to expand and unify its campus, the Portland Museum of Art stands ready to embark on what will be its most ambitious and pioneering era yet. ***This era will be defined by the additions of new, renowned collections, the development of iconic buildings in which to present them, and an innovative relationship with the communities we serve.***

Mark H.C. Bessire
Judy and Leonard Lauder Director

COMMUNITY, COLLECTION, CAMPUS; UNIFIED

PORTLAND MUSEUM *of* ART Seven Congress Square, Portland, Maine 04101 PH: 207 / 775-6418 FAX: 207 / 773-7324 portlandmuseum.org

and prosperity. ***And we know*** the time is now to embark on this profound and permanent shift forward.

BEYOND THE BRICK

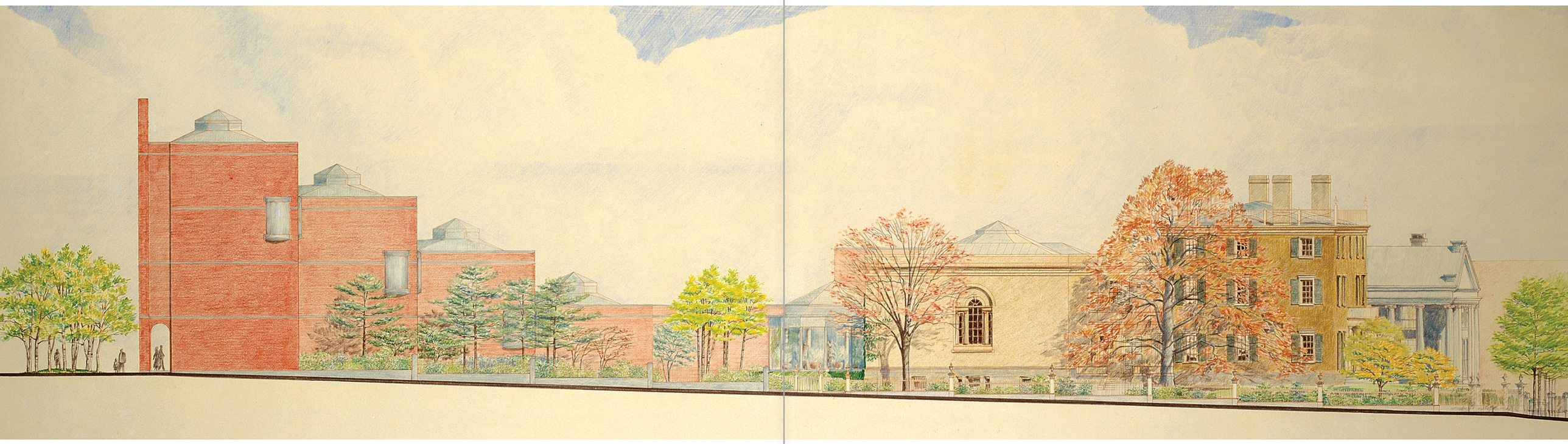

CONTENTS:

History	8
Collections	16
Needs	20
Solutions	22
Campus	24

The Portland Museum of Art is about to fundamentally change Maine. In a region traditionally renowned for its natural beauty and cuisine, the PMA has a new vision defined by arts, culture, equity, and sustainability. To get there will require innovative thinking that goes "beyond the brick," and into the very nature of what a museum can be.

We believe the museum can transcend convention and redefine the quintessential Maine experience. ***We understand*** that the PMA, through investment in art and the facilities that bring that art to the public, can initiate a transformative new chapter for our region, one defined by growth and prosperity. ***And we know*** the time is now to embark on this profound and permanent shift forward.



It's time to envision the next great era in PMA history, one sparked through new, world-famous collections and an architecturally innovative and unified campus that serves as an epicenter for conversation, connection, and community.

– MARK H.C. BESSIRE,
JUDY AND LEONARD
LAUDER DIRECTOR


OUR HISTORY

AT 140 YEARS OLD, THE PMA IS AMONG THE OLDEST ART MUSEUMS IN THE COUNTRY, AND PREDATES X-RAYS, THE EIFFEL TOWER, AND THE BOSTON RED SOX.

THE FIRST 100

Although the museum was founded in 1882, the PMA story really begins with the legacy of its first benefactor, Margaret Jane Mussey Sweat. In 1908, Sweat bequeathed the McLellan House and necessary funds to build the L. D. M. Sweat Memorial Galleries in memory of her late husband. Margaret Jane Mussey Sweat's belief in the museum would set the precedent for future generations of philanthropy and provide the visionary foundation of what the Portland Museum of Art could be.

1882
The Portland Society of Art is founded by artists.

1888
COLLECTION
Benjamin Paul Akers' *The Dead Pearl Diver* becomes the museum's very first acquisition, marked by a group donation model.

1908
CAMPUS
Sweat bequeaths the McLellan House, an 1801 federal-style three-story mansion designed by John Kimball, Sr., to found the museum. Sweat foresees the need for future growth, and includes the necessary funds to build the L. D. M. Sweat Memorial Galleries.

1911
CAMPUS
L.D.M. Sweat Memorial Galleries open in a Beaux-arts style building designed by John Calvin Stevens: 7,500 sq. ft., with 4,000 sq. ft. of exhibition space.

CREATING THE PMA, 1976–2006

When Charles Shipman Payson gave the museum 17 artworks by Winslow Homer in 1976, it served as a catalyst for a group of visionary leaders to expand the campus, attract the museum's first significant collections and long-term loans, and establish the downtown footprint that remains to this day.

1976
COLLECTION
Maine native Charles Shipman Payson promises the museum his collection of 17 paintings by Winslow Homer.

CAMPUS
Critically, Payson identifies the museum's physical limitations and generously gives $8 million toward the construction of a new building.

1979
COLLECTION
In direct response to the Payson gift, the Hamilton Easter Field Art Foundation Collection adds more than 50 paintings, sculptures, and works on paper by American modernists to the PMA collection.

1980
COLLECTION
Edward Hopper's *Pemaquid Light*, which continues to be the PMA's most requested artwork by visitors, joins the collection.

1981
CAMPUS
The museum breaks ground on the Charles Shipman Payson Building.

1983
CAMPUS
Designed by Henry Nichols Cobb of Pei Cobb Freed & Partners, the new heart of the PMA opens with 20,000 sq. ft. of exhibition space.

1983
COLLECTION
The Friends of the Collection is founded by a group of enterprising women to bring greater diversity and equity to the PMA through the acquisition, conservation, and care for the collection and related programming.

FUN FACT | Artworks by Ahmed Alsoudani, David C. Driskell, Edward Hopper, Louise Nevelson, Isamu Noguchi, Marguerite Zorach, and many more have been acquired by the Friends of the Collection.

1988
COLLECTION
Winslow Homer's masterpiece, *Weatherbeaten*, sparks a new era of major growth of the collection.

1991
COLLECTION
The Joan Whitney Payson Collection of 20 impressionist and post-impressionist works of art is given to the museum on permanent loan. Pierre-Auguste Renoir's *Confidences (Secrets)* is among the highlights of the collection.

1996
COLLECTION
Elizabeth B. Noyce bequeaths 66 works of American art, which at the time stands as the most extensive and diverse gift of American art ever given to the museum.

2002
CAMPUS
After a successful $12.3 million capital campaign, the PMA meticulously renovates the McLellan House, restoring it to its original condition and reopening it to the public in 2002.

For more than 40 years, there have been no increases in galleries, visitor amenities, or capacity.

ENSURING FLEXIBILITY, 2006 – 2016

The first 10 years of the 21st century proved to be a pivotal decade in Portland, and as its cultural renaissance took hold, the PMA moved to secure the museum's future flexibility by securing three strategic properties: 87 Spring Street, the Charles Quincy Clapp House, and the Winslow Homer Studio.

2006
CAMPUS
The PMA purchases the Winslow Homer Studio and begins restoration project.

2007
CAMPUS
The Charles Quincy Clapp House, one of Maine's important early examples of high style Greek Revival architecture built in 1832, is purchased.

FUN FACT | Acquired by the Portland Society of Art in 1914, with ownership transferring in 1982 to Maine College of Art when the Portland Society of Art separated into the PMA and MECA.

Board votes to purchase 87 Spring Street in 2007 for $2.35 million.

2012
COMMUNITY
The exhibition *Weatherbeaten* breaks attendance records and sets a new precedent as to what the museum could do if it unified exhibition strategy, audience development, and brand equity in the years to come.

CAMPUS
The Winslow Homer Studio opens to the public.

2013
COLLECTION
CAMPUS
COMMUNITY
The PMA begins planning a four year, cross-departmental accessibility initiative, *Your Museum, Reimagined,* to reinstall the collection, digitize the collection, improve physical accessibility, and create more ways to remove financial means as a barrier to the museum.

FUN FACT | Director Mark Bessire often said, "the PMA built a building without a building."

2014
CAMPUS
The museum purchases the land surrounding the Winslow Homer Studio to be preserved in perpetuity through an $11.8 million capital campaign for restorations, land, and building the endowment.

COLLECTION
Robert Indiana's *SEVEN* is installed in Congress Square, simultaneously adding an iconic public work of art in Portland while underscoring the PMA's physical address at 7 Congress Square.

2015
COLLECTION
Andrew Wyeth's *River Cove*, which the New York Times said, "may be Wyeth's best painting" and is regularly identified by art historians as among his most important and impressive artworks, joins the collection.

THE *ART FOR ALL* GENERATION, 2016 - PRESENT

The path the PMA is about to take was made possible through several successful projects and initiatives that ensured artworks and audiences came together to move the museum forward.

In 2015 the PMA announced its commitment to a multiyear, cross-departmental collections and accessibility initiative, *Your Museum, Reimagined*. By its completion in 2017, the PMA had reinstalled the collection, digitized the collection, improved physical accessibility, and created more ways to remove financial barriers to the museum.

2016
COMMUNITY
A sustained multiyear increase in attendance begins, growing beyond the previous five-year average of 130,000, jumping 7%.

2017
COMMUNITY
The PMA launches *Your Museum, Reimagined*, immediately attracting 20,000 more visitors than the year before while establishing a new baseline for annual attendance.

The David E. Shaw Family Sculpture Park opens as a free space to the public for the first time in nearly 35 years.

Recent additions by John Bisbee, Jonathan Borofsky, Isamu Noguchi, and William Zorach have joined works by Anthony Caro and Celeste Roberge.

20,000 more visitors come to the museum.

COLLECTION
A substantial collection of photographs by Nan Goldin joins the collection.

2018
COMMUNITY
11% increase in attendance over 2016.

Through the generosity of Susie Konkel, the PMA introduces free admission for everyone ages 21 and under.

The museum launches multivocal didactic materials in exhibitions, which–alongside community advisory committees–improve the range of perspectives and educational opportunities available in the galleries.

Since that time, the PMA has aimed to build on the new wave of energy and support at the museum. This has been marked by a deep commitment to Diversity, Equity, Accessibility, and Inclusivity [DEAI] through exhibitions and programs that reflect the region's diverse communities and experiences with art that brings people together. We call it *Art for All*.

2019
COMMUNITY
Record Attendance: 176,464 visitors to the museum with a 10% increase over 2018 plus a 16% over previous half decade.

COLLECTION
Kara Walker's *Occupation of Alexandria*, David C. Driskell's *Ghetto Wall #2*, and Jeffrey Gibson's *PEOPLE LIKE US* immediately become collection highlights.

FUN FACT | 290 artworks added to the collection since 2016.

CAMPUS
The museum purchases 142 Free Street building, directly adjacent to the museum's Charles Shipman Payson Building. The purchase provides the museum with flexibility for future opportunities and enables the PMA to secure the area around Congress Square as a center for arts and culture.

2020
COMMUNITY
Attendance goal is set for 220,000.

As the pandemic takes hold, the PMA pivots to a digital-first museum, creating hundreds of types of content across all departments, and sets new record with 3.53 million people engaging with the museum online.

369% increase in web traffic from previous year.

Throughout the PMA's history, there have been flash points where circumstance, positioning, and support have come together to move the museum forward. Reflecting on these cycles is critical to understanding the unique and promising moment the PMA is embracing.



IT'S TIME

to envision the next great era in PMA history, one sparked through new, world-famous collections and an architecturally innovative and unified campus that serves as an epicenter for conversation, connection, and community.

ATTRACTING COLLECTIONS

Our dedication to the collection has never been stronger. We're committed to highlighting the strengths of our existing collection and the long-term loans that have attracted local and global audiences for decades. Simultaneously, we're expanding the collection dramatically through additions by artists such as Jeffrey Gibson, Daniel Minter, Tim Rollins & K.O.S., Clifford Ross, Theresa Secord, and Kara Walker. Lastly, we're reinforcing holdings of landmark works by Maine artists, including Lois Dodd, David Driskell, Winslow Homer, John Marin, and Andrew Wyeth.

The museum is now about to move light-years forward, with the addition of several major, internationally renowned and incredibly valuable collections that will transform everything. This expansion of the collection is the most extensive and diverse in the institution's history, and immediately centers the PMA as one of the most important museums in the Northeast.

But the opportunity and challenge ahead is clear: to present these collections at all, let alone meaningfully and in line with our values, we need to increase capacity to provide welcoming spaces for all through the growth and unification of our campus.



GROWING OUR COLLECTION

Beginning with our first acquisition in 1888 of Benjamin Paul Akers' *The Dead Pearl Diver*, the PMA has amassed a permanent collection of morethan 18,000 objects, with roughly 75 percent arriving as gifts from more than 10,000 donors.



ALEX KATZ FOUNDATION GIFTS

Over the last decade, the Alex Katz Foundation has generously provided the PMA with a collection of nationally and internationally renowned artworks by Katherine Bradford, Emily Brown, Lois Dodd, Misaki Kawai, Chris Martin, Julian Opie, and more. The foundation has contributed more than 45 artworks to the PMA collection since 2011.



JUDY GLICKMAN LAUDER PHOTOGRAPHY COLLECTION

Anchored by works from some of the most beloved and influential photographers of the 20th century, including Berenice Abbott, Diane Arbus, Richard Avedon, Margaret Bourke-White, Danny Lyon, Sally Mann, Gordon Parks, and James Van Der Zee, the collection will become the center of a photographic collection at the Portland Museum of Art that will thrill audiences from around the world. The collection also includes photographs by critical contributors to the medium's history, such as Irving Bennett Ellis, Lotte Jacobi, Alma Lavenson, Ben Shahn, Graciela Iturbide, and Glickman Lauder, the collector herself.



BARBARA GOODBODY COLLECTION

Over the last half decade, the PMA has worked to prioritize artworks and perspectives from our Wabanaki communities, presenting contemporary artworks in our Biennial series, featuring leaders in our marquee public programs, and partnering with artists and community members on inclusive, direct, and honest didactic materials in order to dismantle systemic racism and art historical blind spots. Wabanaki baskets, given generously by Barbara Goodbody in 2021, include stunning works by David Moses Bridges, Martin Dana, Jeremy Frey, Theresa Secord, Sarah Sockbeson, Geo Soctomah Neptune, and more.



WALTER B. AND MARCIA F. GOLDFARB COLLECTION

Assembled by PMA Trustee and patron Dr. Walter Goldfarb and his wife, Marcia, the Goldfarb collection focuses on three primary categories of painting: ship portraits, landscapes in the tradition of the Hudson River School, and trompe l'oeil still life. Featured artists include Sanford R. Gifford, John Haberle, William Michael Harnett, and John Frederick Peto. The Goldfarb Collection offers strong resonance with existing PMA works by Charles Codman, Fitz Henry Lane, Eastman Johnson, and others, providing visitors a coherent narrative of 19th-century American art.



RICHARD ESTES COLLECTION

The Richard Estes Collection and Archive has been promised to the Portland Museum of Art. This transformational collection contains paintings and extensive archival material, forming a significant body of work that will provide breadth to the museum's collection of American art. The Richard Estes Collection will help chart the reinvigoration of realist and figurative American painting in the decades after World War II, when numerous artists of Estes' generation were seeking a fresh approach to painting. Many of these artists eventually found Maine, or places like Maine–rural environments where their interest in the natural world became intertwined with their artistic visions.



BERGER COLLECTION EDUCATIONAL TRUST

A major gift of works by American icon Winslow Homer strengthens the Portland Museum of Art's position as one of the leading institutions in the world to experience the art and legacy of Winslow Homer. Highlights of the gift from the Berger Collection Educational Trust include paintings *Returning from the Spring,* 1874, and *Young Farmers (Study for Weaning the Calf),* 1873-1874, as well as nearly a dozen other works made by Homer during his career.



DAVID AND EVA BRADFORD COLLECTION

German expressionist works that powerfully blend issues of history, politics, art, and national identity, provoking questions about who we are and what we value in ways that are as pertinent today as they were a century ago. The works, gifts to the PMA from David and Eva Bradford, add context to the social and artistic expression of the era and are equally probing in their evaluation of German society and national identity. Highlights include works by Max Beckmann, Otto Dix, and Käthe Kollwitz.

THE PMA'S SUCCESS IS NOW OUR BIGGEST CHALLENGE

In the last two years, our audiences have made it clear that they have big expectations, and we do too. **We've sustained double-digit increases in attendance for the last half decade, reaching a record high in 2019 with more than 175,494 visitors.** As we look to the future, it's easy to see how the constraints of our campus will soon hinder our goals and our communities' needs.



We already welcome nearly

2x

the planned capacity of the Payson building.

In just five years of our current pace of growth, we will exceed

3x

the planned capacity of our campus.

4x

as many visitors than peer museums with similar exhibition square footage.

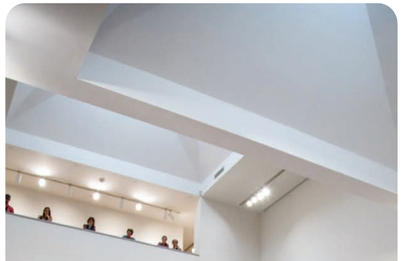

WE NEED TO BUILD UP

We are being forced to reduce exhibition size, relocate marquee programs and events, and restrict capacity due to limits of our campus.





OUR NEEDS IN CONTEXT

Compared to peer institutions*, the PMA...

has **170-515%** **MORE VISITORS** than similar sized campuses.

has **130-370%** **MORE VISITORS** than equivalent member households.

has **140-585%** **MORE VISITORS** than comparable collection sizes.

is **one of only 13** **MUSEUMS IN THE UNITED STATES** with 100% of its collection online and accessible digitally.

has the **4th most open hours** **IN THE ENTIRE COUNTRY.**

leads **every other museum but one** **IN FREE ADMISSION** by age.

serves **more school districts** **THAN BROOKLYN MUSEUM AND NATIONAL GALLERY OF ART.**

* According to the American Association of Museum Directors (AAMD) 2019 report, which represents the most recent data. AAMD did not conduct reports for 2020. Data rounded to nearest fifth.

OUR PARADIGM SHIFT IS DEFINED BY EQUITY, SUSTAINABILITY, AND FLEXIBILITY.

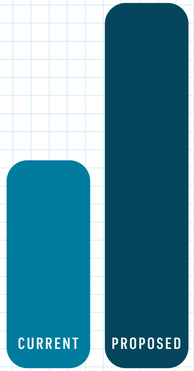

21,556 SF 38,070 SF

+ 77%

Space for Art

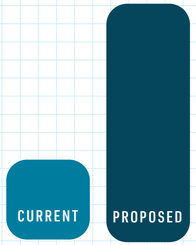

8,276 SF 25,214 SF

+ 205%

Space for Community

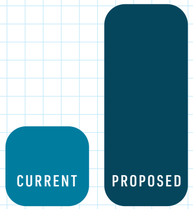

8,478 SF 21,163 SF

+ 150%

Space for Operations

By adding

60,000 SF

we can easily welcome

300,000-500,000

visitors per year.

In October 2019, the PMA took a big step toward a bold future, purchasing 142 Free Street building directly adjacent to the museum's Charles Shipman Payson Building. In a rapidly evolving city, this purchase provides the museum with a footprint for future opportunities and enables the PMA to define Portland as a national center for arts and culture.

With the opportunities of 142 Free Street, the development of Congress Square (a major, underdeveloped urban park at the main entrance of the museum) and the domino effects of renewal across our campus at sites like the Payson Building, Spring Street lot, and more, **now is the time to unify the campus and thoughtfully plan the museum's future.** We envision our campus as an environmentally sustainable gathering place where a strong artistic vision drives conversation, creativity, and cultural vibrancy.

This investment will embody our *Art for All* and Sustainability values, with 142 Free Street being the first sustainable and green public building in Portland and just the fourth green public museum building in the country. Planned across a six- or seven-story building, the ground floor is a **community gathering space** with a gallery, classrooms, and versatile areas for collaborations, partnerships, and communal food sharing. The lower level is a large **flexible auditorium**, and one floor would be **dedicated to housing local nonprofit organizations,** which would operate in the building and become crucial to the **education and outreach** programs of the PMA. One floor would include an all ages Makers Space, classrooms, and a Photography Center. One floor would be dedicated to **traveling exhibitions** as our current space of 4,500 square feet is too small for us to collaborate with our peer museums; another floor would hold offices. The rooftop would provide a **meeting area, restaurant, and a sculpture park as well as an opportunity for earned revenue.**

A key component of the new PMA building at 142 Free Street will be **home to a photography study center** that teaches and inspires our youth, partners with seasoned photographers, and analyzes the historical and contemporary fields of photography. This dedicated space could fully support the field of photography for all generations by creating a new model that is so needed today, as museums struggle with their past. It could be housed on a floor that provides full-service photography, from darkrooms, classrooms, and galleries, to a study center in partnership with other cultural organizations, making it an active and accessible space for all. It could also include a dedicated permanent gallery, with exhibitions changing annually so that visitors to the PMA can build over time their knowledge of the art of photography.

It's time to create the next great PMA experience, adding a new, iconic, and architecturally significant center to our historic campus. A unified and renewed campus will enhance the mission, welcome visitors from around the corner and across the world, and encourage meaningful connections with artworks, programs, and events.



IT'S TIME.

EXISTING SITE PLAN

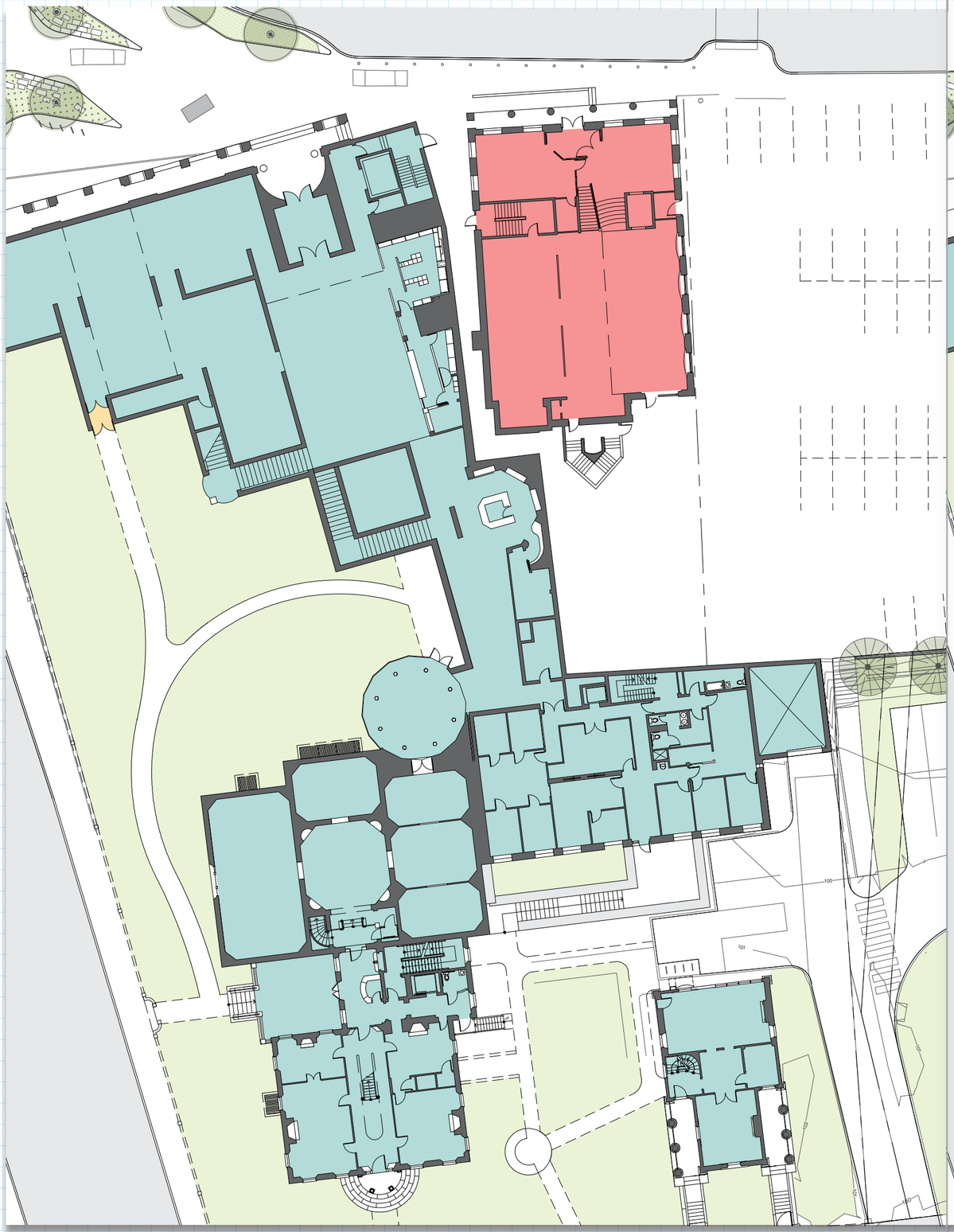

POTENTIAL DEVELOPABLE SPACE PLAN

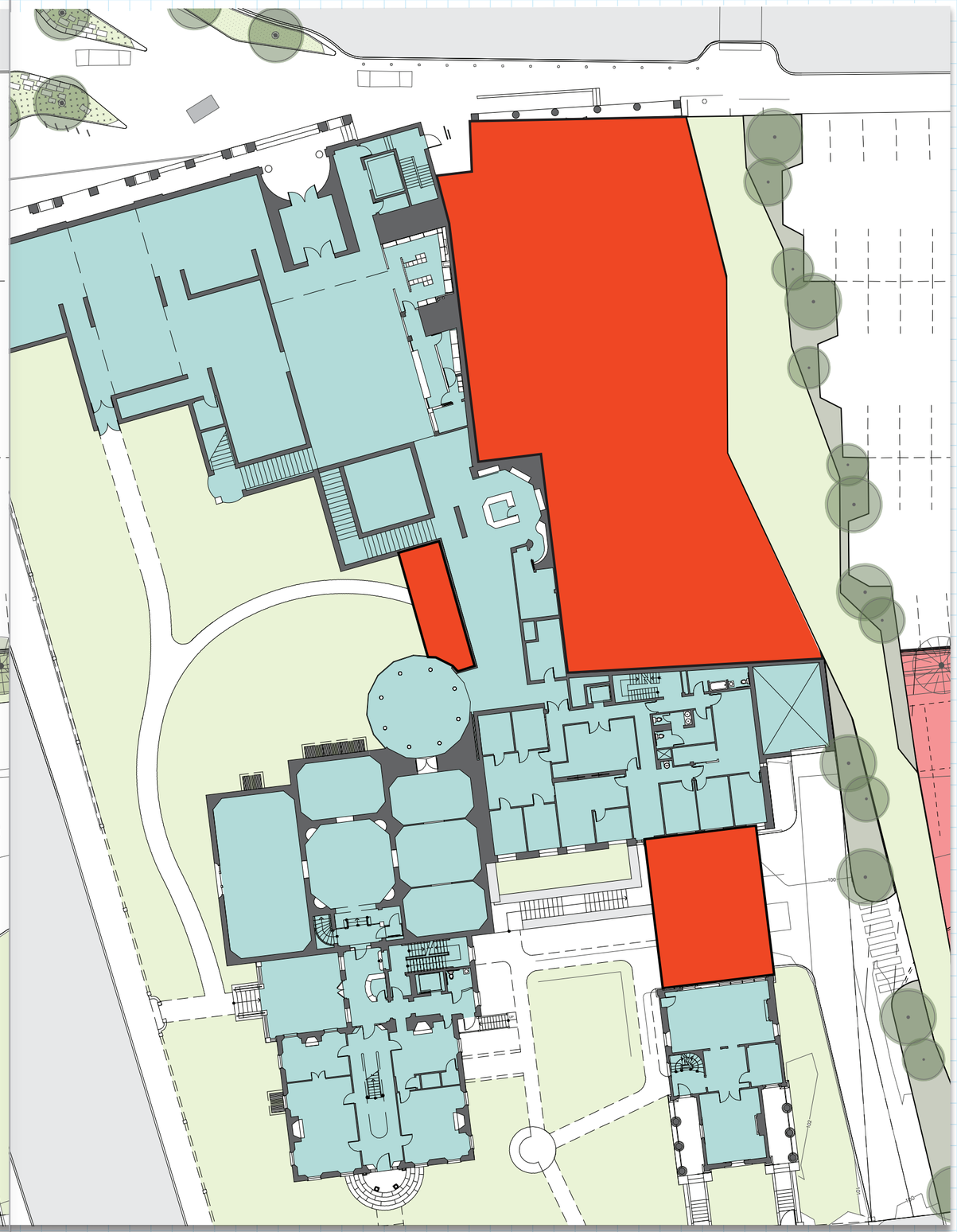

ART IS THE HEART

At every step along our 140-year history, we have been supported, guided, and sustained by our visionary partners who understand art's unique capacity to connect, inspire, and transform.

Beginning today, we can renew, revitalize, and redefine a museum's role within our society–but we can't do it alone.

With your partnership and support, we can manifest a model for all museums: one defined by leadership, courage, sustainability, and inclusivity. The PMA that you will help establish will strengthen our societal fabric and affirm that museums are critical to the health of our communities.

Together, we can realize the true potential of museums for all people.





What we leave as proof of our being here will not necessarily be in the sciences, in politics, in economics, but will manifest itself through the arts.

– DAVID C. DRISKELL

We're committed to connecting the art and ideas inside our walls with the world and people outside of them, and our vision for the museum will demonstrate that **the PMA is a different kind of arts institution:** one that platforms its communities, promotes its region, and elevates our shared future.

...Museums have an opportunity to not become community centers, but to ***be at the center of their community...***

– LONNIE G. BUNCH III, 14TH SECRETARY
OF THE SMITHSONIAN AND PMA'S 2018
NELSON SOCIAL JUSTICE KEYNOTE SPEAKER

Page 3: Jeffrey Gibson (United States, born 1972), *PEOPLE LIKE US*, 2018, glass and plastic beads, tin, copper and gold-finished jingles, artificial sinew, quartz crystal, silver-coated copper wire, druzy crystal, nylon thread, nylon fringe, acrylic felt, acrylic paint, repurposed wool blanket, recycled jersey stuffing, rawhide, 60 1/2 x 24 1/2 x 14 inches. Gift of Crewe Foundation and Family, 2019.13. © Courtesy of the artist and Robert Projects, Los Angeles, California; Photo Peter Mauney

Page 4: Architectural rendering of the Payson Building by I. M. Pei & Partners.

Page 12: Winslow Homer (United States, 1836–1910), *Weatherbeaten*, 1894, oil on canvas, 28 1/2 x 48 3/8 inches. Bequest of Charles Shipman Payson, 1988.55.1. Image courtesy of Luc Demers

Page 13: Katherine Bradford (United States, born 1942), *Woman Flying*, 1999, oil on canvas dropcloth, 84 x 72 inches. Museum purchase with support from the Friends of the Collection, 2012.14. Image courtesy of Pillar Digital Imaging. © Katherine Bradford

Page 17: Pierre-Auguste Renoir (France, 1841–1919), *Confidences (Secrets)*, circa 1874, oil on canvas, 32 x 23 3/4 inches. The Joan Whitney Payson Collection at the Portland Museum of Art, Maine. Gift of John Whitney Payson, 1991.62. Image courtesy of Pillar Digital Imaging

Pages 18 / 19, left to right: Elizabeth Hazan (United States, born 1965), *The Forest at 2:00am*, 2019, oil on linen, 50 x 47 inches. Gift of the Alex Katz Foundation, 2019.26.2. Image courtesy of Cary Whittier. © Elizabeth Hazan. Gordon Parks (United States, 1912–2006), *American Gothic, Washington, DC*, 1942, gelatin silver print, 13 x 10 1/4 inches. Promised Gift from the Judy Glickman Lauder Collection. Image courtesy of Luc Demers. Courtesy of and copyright The Gordon Parks Foundation. Theresa Secord (Penobscot, born 1958), *Trinket basket*, 2014, birch bark, spruce rooblack ash, sweetgrass, cedar bark, dye, 5 1/2 x 4 1/2 x 4 1/2 inches. Gift of Barbara M. Goodbody, 2021.19.12a,b. Image courtesy of Luc Demers. © Theresa Secord. John Frederick Peto (United States, 1854-1907), *Office Board for Christian Faser*, 1881, oil on canvas, 20 x 16 inches. Collection of Walter B. and Marcia F. Goldfarb. Richard Estes (United States, born 1932), *Kentucky Fried Chicken*, 2007, screenprint, 24 x 16 inches. Private collection. Image courtesy of Luc Demers. © Richard Estes. Winslow Homer (United States, 1836–1910), *Returning from the Spring*, 1874,oil on panel, 7 7/8 x 5 3/4 inches, Gift from the Berger Collection Educational Trust in honor of the preservation of the Winslow Homer Studio, 2018.9.1. Image courtesy of Luc Demers. Ernst Ludwig Kirchner (Germany, 1880-1938), *Striding Bathers in the Woods (In der Walde Schreitende Badens)*, 1910, etching on wove paper, 9 3/4 x 7 3/4 inches. Gift of David and Eva Bradford, 2003.34.2. Image courtesy of Luc Demers

Page 28: David C. Driskell (United States, 1931–2020), *Ghetto Wall #2*, 1970, oil, acrylic, and collage on linen, 60 x 50 inches. Museum purchase with support from the Friends of the Collection, including Anonymous (2), Charlton and Eleanor Ames, Eileen Gillespie and Timothy Fahey, Cyrus Hagge, Patricia Hille Dodd Hagge, Alison and Horace Hildreth, Douglas and Sharyn Howell, Harry W. Konkel, Judy and Leonard Lauder, Marian Hoyt Morgan and Christopher Hawley Corbett, Anne and Vince Oliviero, D. Suzi Osher, Christina F. Petra, Karen and Stuart Watson, Michael and Nina Zilkha, and with support from the Freddie and Regina Homburger Endowment for Acquisitions, and the Emily Eaton Moore and Family Fund for the Collection, 2019.16. © Estate of David C. Driskell. Courtesy DC Moore Gallery, New York

HOW WE GOT HERE:

Diversity, Equity, Accessibility, and Inclusion (DEAI) Roadmap

Equity Strategic Action Plan (ESAP)

Listening Sessions

Staff Workshops

Community Focus Group

Feasability Study

Strategic Plan

WHAT'S NEXT:

PHASE 1 | 142 Free Street Development
Begins with an *Architect Selection Process* and culminates with breaking ground on a new building.

Phase 2 | Further Campus Unification
Optimize and integrate existing facilities.

Phase 3 | Land Investment
Spring Street property transformation to serve the future of the PMA and our communities.

JOIN US

Mark H.C. Bessire
Judy and Leonard Lauder Director
Direct: (207) 699-4061
mbessire@portlandmuseum.org

Elizabeth Jones
Senior Deputy Director
Advancement and Sustainability
Direct: (207) 699-4543
Cell: (207) 831-8566
ejones@portlandmuseum.org

Ashleigh Hill
Director of Philanthropy
Direct: (207) 494-5346
PH: (207) 775-6148, ext. 3212
ahill@portlandmuseum.org

Lane Brenner
Director of Major Gifts
Cell: (315) 243-3379
lbrenner@portlandmuseum.org

Alicia Coll
Philanthropy and Campaign Administrator
Direct: (207) 699-4065
acoll@portlandmuseum.org

...Museums have an opportunity to not become community centers, but to ***be at the center of their community...***

– LONNIE G. BUNCH III, 14TH SECRETARY OF THE SMITHSONIAN AND PMA'S 2018 NELSON SOCIAL JUSTICE KEYNOTE SPEAKER



The PMA Blueprint

Building a Landmark for the Future

The Portland Museum of Art is defined by three pillars: community, collection, and campus.

...Museums have an opportunity to not become community centers, but to ***be at the center of their community...***

– LONNIE G. BUNCH III, 14TH SECRETARY OF THE SMITHSONIAN AND PMA'S 2018 NELSON SOCIAL JUSTICE KEYNOTE SPEAKER



ideas foster growth requires capacity unifies campus welcomes **community** defines culture reflects art. **Art** reflects culture defines community **centers** region attracts visitors create energy galvanizes support activates vision inspires giving diversifies collections display beauty sparks imagination spurs conversation poses ideas foster growth requires capacity unifies campus welcomes **community** defines culture reflects art. **Art** reflects culture defines community **centers** region attracts visitors create energy galvanizes support activates vision inspires giving diversifies collections display beauty sparks imagination spurs conversation poses ideas foster growth requires capacity unifies campus welcomes **community** defines culture reflects art. **Art** reflects culture defines community **centers** region attracts visitors create energy galvanizes support activates vision inspires giving diversifies collections display **beauty** sparks imagination spurs conversation poses ideas foster growth requires capacity unifies campus welcomes **community** defines culture reflects art. **Art** reflects culture defines community **centers** region attracts visitors create energy galvanizes support activates vision **inspires** giving diversifies collections display beauty sparks imagination spurs conversation poses ideas foster growth requires capacity unifies campus welcomes **community** defines culture reflects art. **Art** reflects **culture** defines community **centers** region attracts visitors create energy galvanizes support activates vision inspires giving diversifies collections display **beauty** sparks imagination spurs conversation poses ideas foster growth requires capacity unifies campus welcomes **community** defines culture reflects art. **Art** reflects culture defines community **centers** region attracts visitors create energy galvanizes support activates vision inspires giving diversifies collections display beauty sparks imagination spurs conversation poses ideas foster growth requires capacity unifies campus welcomes **community** defines culture reflects art. **Art** reflects culture defines community **centers** region attracts visitors create energy galvanizes support activates vision inspires giving diversifies collections display beauty sparks imagination spurs conversation poses ideas foster growth requires capacity unifies campus welcomes **community** defines culture reflects **art. The Portland Museum of Art is defined by three pillars: community, collection, and campus.**



17 HISTORIC PRESERVATION

17.1 PURPOSE

The purpose of this article is to promote the educational, cultural, economic, and general welfare of the City of Portland by:

A. Creating a mechanism to identify, preserve and enhance distinctive areas, sites, structures, and objects that have historic, cultural, architectural, and archaeological significance.

B. Providing a resource of information and expertise to help those interested in rehabilitation or new construction in a district or restoring a landmark.

C. Applying review standards in a reasonable and flexible manner to prevent the unnecessary loss of the community's historical features and to ensure compatible new construction and rehabilitation in historic districts while not stifling change and development or forcing modern recreations of historic styles.

D. Fostering civic pride in the city's history and development patterns as represented in such distinctive areas, sites, structures, and objects.

E. Protecting and enhancing neighborhood character.

F. Stabilizing and improving the values of designated properties and areas.

G. Protecting and enhancing the attractiveness of the city to its home buyers, home owners, residents, tourists, visitors, businesses and shoppers.

H. Fostering and encouraging preservation, restoration, and rehabilitation that respects the historic, cultural, architectural, and archaeological significance of distinctive areas, sites, structures, and objects.

17.2 DEFINITIONS

Alteration. Any act or process requiring a building permit and any other act or process not requiring a building permit but specifically listed in this article as a reviewable action, including without limitation the repair, reconstruction, demolition, or relocation of any structure or object, or any part of a structure or object.

Certificate of Appropriateness. A certificate issued by the Planning Authority evidencing approval of specific plans for alteration of a structure, site, or designated historic landscape or new construction on a site in accordance with this article.

Certificate of Economic Hardship. A certificate issued by the Planning Authority evidencing a hardship variance approved by the Zoning Board of Appeals in accordance with Article 2.

Certificate of Non-Applicability. A certificate issued by the Planning Authority evidencing a determination that specific plans for alteration of a structure, site, or designated historic landscape or new construction on a site do not require approval under this Article.

Contributing. A classification applied to a site, structure, or object within a historic district signifying that it contributes generally to the qualities that give the historic district cultural, historic, architectural, or archaeological significance as embodied in the criteria for designating a historic district.

Demolition. Any act or process that partially or totally destroys a structure or object.

District. A historic district or historic landscape district.

Historic district. A geographically definable area possessing a significant concentration, linkage, or continuity of sites, buildings, structures, or objects united historically or by past events or aesthetically by plan or physical development. A district may also comprise individual elements separated geographically but linked by association or history.

Historic landscape district. A geographically definable area possessing a significant concentration, linkage, or continuity of landscape components which are united by human use and past events or aesthetically by design, plan or physical development.

Historic Resources Design Manual. A manual including guidelines for meeting historic preservation ordinance review standards and other information.

Landmark. Any property, site, structure, or object of particular historic, architectural, or archaeological significance to Portland, the State of Maine and/or the United States relating to its cultural, social, economic, political, or architectural heritage, or which is associated with historic persons, important events or themes in local, state, or national history.

New construction. The adding to a structure by an addition, the erection or placement of any new structure on a lot or property, or the comprehensive redesign/renovation of an existing structure.

Noncontributing. A classification applied to a site, structure, object, or portion thereof, within a historic district signifying that: 1) it does not contribute generally to the qualities that give the historic district cultural, historic, architectural, or archaeological significance as embodied in the criteria for designating a historic district; 2) was built within 50 years of the date of district designation unless otherwise designated in the historic resources inventory; or 3) where the location, design, setting, materials, workmanship, and association have been so altered or have so deteriorated that the overall integrity of the site, structure, or object has been irretrievably lost. A portion of an otherwise contributing or landmark structure may be determined by the Historic Preservation Board to be non-contributing if it meets one or more of the above conditions.

Object. Anything constructed, fabricated, or created, the use of which does not require permanent or semi-permanent location on or in the ground.

Ordinary maintenance. Acts of maintenance or repair which do not include a change in the design, material, or outer appearance of a structure, including without limitation repainting, replacement of materials or windows of the same scale, texture and color, and landscaping other than within an historic landscape district.

Preservation. The act or process of applying measures necessary to sustain the existing form, integrity, and materials of an historic property. Work, including preliminary measures to protect and stabilize the property, generally focuses upon the ongoing maintenance and repair of historic

materials and features rather than the extensive replacement and new construction.

Rehabilitation. The act or process of returning a property to a state of utility through repair or alteration which makes possible an efficient contemporary use while preserving those portions or features of the property which are significant to its historical, architectural, and cultural value.

Relocation. Any removal or relocation of a structure on its site or to another site.

Restoration. The act or process of accurately depicting the form, features, and character of the property as it appeared at a particular period of time by means of the removal of features from other period in its history and reconstruction of missing features from the restoration period.

Site. The location of a significant event, an archaeological site, a landscape or traditional cultural property, or a building or structure, whether standing, ruined or vanished, where the location itself maintains historical or archaeological value regardless of the value of any existing structure.

17.3 ADMINISTRATIVE PROCEDURES

17.3.1 Costs

A. Any project may be subject to fees as established by the City Council to cover administrative costs and the costs of Historic Preservation Board review. Applicants shall also pay a fee to cover the professional and administrative costs for analysis associated with project review, including but not limited to planning, legal, or other services. The fee shall be based on the hours of review and processing time and prevailing hourly rate for reimbursement of City costs. The City shall periodically invoice the applicant for such costs incurred by the City, which invoice shall be paid promptly by the applicant.

B. Every applicant shall bear the entire expense of giving notice by mail and publication in accordance with this article.

C. No Certificate of Appropriateness, building, demolition, or other permit shall issue until all current charges due under this article have been paid. The balance of any remaining review and administrative costs invoiced or incurred after a permit has been issued shall be paid in full by the developer prior the issuance of any temporary or permanent certificate of occupancy.

17.3.2 Notice of public meeting

A. For all Certificate of Appropriateness applications that are subject to Historic Preservation Board review, the applicant shall be responsible for posting a notice of public meeting sign on the property where the development is to occur. The dimensions, construction, and content of the sign shall be in accordance with standards established by the Planning Authority.

B. The sign shall be posted at least 10 days prior to the public workshop or hearing date, and shall be removed from the site no more than three days following the date of the meeting.

C. Once the required notice of public meeting signage is posted, the applicant shall submit a completed certification of posting form to the Planning Authority.

D. In the event that a required notice of public meeting sign is knocked over or made illegible, it shall be the responsibility of the applicant to promptly reset or replace the sign, though failure to do so shall not invalidate the review.

17.3.3 Notices and public comment

A. Except as provided in Subsection 17.7.5, notice of proceedings upon any application for a Certificate of Appropriateness shall be given only when the proposed activity otherwise constitutes major site plan. Notice of such proceedings also shall be furnished to any persons interested in historic preservation who have registered with the Planning Authority, and to the Historic Preservation Board and/or the Planning Board when the proceeding is pending before a different body. The failure to give any notice required by this article shall not affect the validity of any action taken.

B. The Historic Preservation Board, the Planning Board, the Board of Appeals, and the City Council shall each invite public comment at a public meeting in accordance with their respective rules, prior to any final action being taken under this article.

C. The Planning Authority shall advise the Historic Preservation Board and the Planning Board of any demolition permit application received by the Planning Authority as to structures or objects that have been classified as noncontributing within nominated or designated districts, but there shall be no Historic Preservation Board review of such permit applications.

17.4 CATEGORIES AND CRITERIA FOR DESIGNATION

17.4.1 Minimum criteria for designation

A. The Historic Preservation Board shall limit its consideration to the following criteria in making a determination on a proposed nomination of an area, site, structure, or object for designation by ordinance as a landmark or district:

1. Its value as a significant example of the cultural, historic, architectural, archaeological, or related aspect of the heritage of the City of Portland, State of Maine, New England region, or the United States.
2. Its location as a site of a significant historic or prehistoric event or activity which may have taken place within or which involved the use of any existing structure on the property.
3. Its identification with a person or persons who significantly contributed to the cultural, historic, architectural, archaeological, or related aspect of the development of the City of Portland, State of Maine, New England region, or the United States.
4. Its exemplification of a significant architectural type, style, or design distinguished by innovation, rarity, uniqueness, or overall quality of design, detail, materials, or craftsmanship.
5. Its identification as the work of an architect, designer, engineer, or builder whose individual work is significant in the history or development of the City of Portland, the State of Maine, the New England region, or the United States.

6. Its representation of a significant cultural, historic, architectural, archaeological, or related theme expressed through distinctive areas, sites, structures, or objects that may or may not be contiguous.

B. In the case of a nominated historic district, the Historic Preservation Board shall also determine whether there is an interrelationship of resources within it which creates an identifiable entity, even if composed of a wide variety of resources. A district must convey a visual sense of the overall historic environment or be a grouping of historically or functionally related properties. A historic district can comprise both individually distinctive historic resources and historic resources that may lack individual distinction but which contribute to the significance and visual character of the district as a whole.

C. In the case of a nominated historic landscape district, the Historic Preservation Board shall also consider its significance as a geological, natural, or designed landscape associated with the development, heritage, or culture of the City of Portland, State of Maine, New England region, or the United States.

D. The Planning Board and City Council shall apply the criteria of (A), (B), and (C) above as well as historic preservation goals included in the Comprehensive Plan, but shall also consider the effect of such designation on other aspects of the Comprehensive Plan of the City.

17.4.2 Integrity of landmarks and historic districts

Any area, structure, or object that meets the criteria in Section 17.4.1 must also have sufficient integrity of location, design, condition, materials, and workmanship to make it worthy of preservation or restoration.

17.4.3 Designation of historic landscape districts

An historic landscape district may be nominated and considered for designation only if the entire area of the district is owned by a unit of federal, state, or local government, or any combination of such ownership.

17.5 NOMINATION, CONSIDERATION AND DESIGNATION

17.5.1 Procedure

The provisions of this section shall govern the nomination, consideration, and designation of landmarks and districts.

17.5.2 Initiation of nomination

A. Nomination of an area, site, structure, or object for consideration of designation as a landmark, historic district, or historic landscape district shall be submitted to the Planning Authority by the following:

1. Any two members of the Historic Preservation Board on their own initiative, by written notice to the Planning Authority, or
2. By written petition of any owner, in the case of a landmark, or
3. By written petition of one or more owners of affected property in the case of a district, provided two members of the Historic Preservation Board must sponsor the petition.

B. A nomination shall be completed and filed with the Planning Authority with all required signatures for the nomination to be pending.

C. Upon nomination, the Planning Authority shall notify the owner or owners of the nomination and shall transmit the nomination to the Historic Preservation Board for its preliminary consideration at a scheduled meeting, which in no event shall be held later than 60 days following nomination.

D. If documentation and analysis that is necessary for the consideration of a given designation has not been provided at the time of nomination, such documentation shall be completed prior to further consideration by the Historic Preservation Board of the nominated landmark, district, or historic landscape.

E. At any time after a complete nomination is filed for an historic district, the owner of a structure who seeks a permit for demolition may apply to the Historic Preservation Board for a determination that the structure to be demolished is noncontributing and eligible for a demolition permit. The determination of the Historic Preservation Board that the structure is eligible for a permit shall be conclusive.

17.5.3 Notification of nomination and public hearing

A. A public hearing on the nomination shall be held by the Historic Preservation Board following one or more preliminary workshops of the Historic Preservation Board.

B. The hearing shall be conducted in accordance with procedures adopted by the Historic Preservation Board. The Historic Preservation Board shall consider all testimony or evidence relating to the designation criteria in Section 17.4 from any person who makes written submissions or appears at the public hearing. The owner of a nominated landmark or of property within a nominated district shall be allowed reasonable opportunity to present testimony or evidence concerning the applicability of the designation criteria in Section 17.4.

17.5.4 Recommendation by Historic Preservation Board

A. Within 45 days following the close of the public hearing, the Historic Preservation Board shall make recommendation to the City Council in the case of a landmark, or to the Planning Board in the case of a district, upon the evidence as to whether the nominated landmark or district meets the criteria for designation in Section 17.4. Such recommendation shall be approved by at least four members of the Historic Preservation Board and shall be accompanied by a report to the City Council and/or Planning Board containing the following information:

1. Explanation of the significance or lack of significance of the nominated landmark or district as it relates to the criteria for designation.
2. Explanation of the integrity or lack of integrity of a nominated landmark or historic district.
3. Proposed design guidelines for review of alteration or construction may be recommended. The specific design guidelines may provide explanation by text and/or schematic examples of visual compatibility for purposes of complying with Section 17.8.
4. Relationship of the nominated landmark or district to the ongoing effort by the Historic Preservation Board to identify and

nominate areas, sites, structures, and objects that meet the criteria for designation.

5. A map showing the location of the nominated landmark and/or the boundaries of the nominated district.
6. A list, including the address, of every site, structure, and object in each nominated historic district indicating their degree of cultural, historic, architectural, or archaeological significance by classification as a landmark, contributing, or noncontributing,

B. Where a motion either in favor of a recommendation or in opposition to a recommendation results in a vote of fewer than four members, the item shall automatically be tabled to the next regularly scheduled meeting.

17.5.5 Notification of Historic Preservation Board recommendation

A. The recommendation of the Historic Preservation Board, including a copy of the report, shall be transmitted to the City Council in the case of a landmark and to the Planning Board in the case of a district. Notice of the recommendation shall be sent by mail to the owner of a nominated landmark and to all owners within a nominated district within 14 days following adoption of the recommendation and report.

B. If the recommendation of the Historic Preservation Board is that the property or district not be designated, the nomination process shall terminate and no new nomination shall be submitted for the identical property or area for a period of one year from the date of termination, except upon a showing of substantial and material newly discovered information.

17.5.6 Determination by Planning Board

A. The Planning Board, upon receipt of a recommendation and a report from the Historic Preservation Board concerning nomination of a district, may hold one or more workshops pursuant to the provisions of Article 2. After review of the Historic Preservation Board recommendation and report, the Planning Board shall hold a public hearing.

B. All meetings, hearings, and deliberations of the Planning Board to consider the recommendation and report of the Historic Preservation Board shall be held in conformity with Article 2.

C. The Planning Board may request the chair of the Historic Preservation Board, or a member designated by the chair, to appear at any meeting, hearing or deliberation to explain any recommendation or report.

D. A public hearing shall be scheduled within 30 days of the Planning Board's final workshop. At the conclusion of the public hearing, the Planning Board shall make its final determination including written findings as to whether the nominated district meets the criteria for designation in Section 17.4. A copy of the determination of the Planning Board shall be sent by regular mail to all owners within a nominated district within 14 days following the determination.

17.5.7 Planning Board recommendation to City Council

The recommendation of the Planning Board regarding a nominated district shall be filed with the

City Clerk within 14 days. It shall be accompanied by a copy of the report and recommendation of the Historic Preservation Board, including any specific proposed design guidelines applicable to the nominated landmark or district. The recommendation of the Planning Board may include proposed changes in other City ordinances, policies, infrastructure, or recommendations with respect to the Comprehensive Plan of the City relating to the proposed designation.

17.5.8 Action by City Council

A. Within 60 days after the filing of a Planning Board recommendation, or Historic Preservation Board recommendation in the case of a landmark, on the nomination with the City Clerk pursuant to Section 17.5.6, the City Council shall designate the landmark or district or reject designation. Any designation may include specific design guidelines for the designated landmark or district.

B. Designation of a district shall be accompanied by a list, including the address, of every site, structure and object in the district. Every site, structure, or object shall be assigned a classification of landmark, contributing, or noncontributing, indicating their degree of cultural, historic, architectural, or archaeological significance. This list may be amended thereafter by the City Council upon recommendation from the Historic Preservation Board and Planning Board under the same procedures as set forth above. Where there are no express findings by the City Council in the designation ordinance, there shall be a presumption that the City Council found that all requirements of Section 17.4 were met.

C. Notice of the proposed action of the City Council shall be provided by mail to the nominator and the owner of the nominated landmark and/or of all properties adjacent thereto prior to City Council action.

D. Notice of City Council action to the same persons shall be sent within 14 days following the City Council action. A copy of each designation and any design guidelines shall be sent to the Planning Board, the Historic Preservation Board, and the Planning Authority.

E. A complete schedule of all landmarks and districts, including design guidelines and a listing of landmark and contributing structures, shall be maintained by the Planning Authority and shall be available online or for public inspection and copying during ordinary business hours.

17.5.9 Amendment or rescission of designation

Amendment or rescission of any designation shall be upon the request of a person or persons authorized to nominate the property or properties affected, or upon request of the City Council, and shall follow the procedure set forth in Section 17.5 for designation. The City Council may rescind or amend a designation only after all of these procedures have been followed. The standards for rescission or amendment applied by the Historic Preservation Board, Planning Board, and City Council shall be limited to those provided in Subsections 17.4.1(A) and (B) and Subsection 17.4.2. Amendments may include reclassification of a portion of a contributing property to noncontributing status, refinement or correction of design guidelines, maps, and other parts of any designation.

STAFF MEMORANDUM
HISTORIC PRESERVATION PROGRAM
PLANNING AND URBAN DEVELOPMENT

TO: Chair O'Brien and Members of the Historic Preservation Board
FROM: Evan R. Schueckler, Historic Preservation Program Manager
DATE: September 1, 2023
RE: 76 Congress Street – Public Hearing – Revised Design Proposal for Performing Arts Center Addition
PROJECT ID: HPBR-002025-2022
MEETING: September 6, 2023

Owner: Friends of St. Lawrence Church/The Hill Arts (Formerly St. Lawrence Arts)
Architect: David Lloyd, Archetype Architects

A sign announcing the Historic Preservation Board's meeting on September 6, 2023 was posted at the property on August 24, 2023. A legal ad was published in the Portland Press Herald on August 25, 2023 and August 26, 2023, and 333 notices were sent to neighboring property owners within 100 feet of the subject property.

PROJECT SCOPE

Construct four-story addition with partial basement to historic Parish Hall of former St. Lawrence Church. Addition to contain 400-seat theatre along with 200-person capacity "Promenade Room" and supporting spaces such as a lobby, bar, and back-stage. The structure is proposed to be clad in granite, backlit perforated metal screen, and glazing. The new theatre will have its main entrance off of Congress Street through an open porch, with a significant frontage along Munjoy Street including the back-stage loading entrance. The addition will connect with the historic Parish Hall in the same area of the former, now demolished, sanctuary.

SUMMARY OF HISTORIC CONTEXT

The St. Lawrence Congregational Church Sanctuary and Parish Hall were constructed in 1897 in a blend of the Romanesque Revival and Queen Anne Styles, following the designs of New York architect, Arthur B. Jennings. The complex was constructed out of primarily rough-faced grey granite accented by a similarly-finished pink granite at string courses and around windows. Above the granite walls, the structures featured large areas of slate wall and roof trimmed in elaborate wood moldings. The window openings were large and filled with stained-glass set-in Romanesque wooden tracery. Both structures featured complex massings with a proliferation of gables, finials, and two prominent

round towers at the corner of Congress and Munjoy Streets.



Figure 1: The now demolished St. Lawrence Church at 76 Congress Street around 1897, the year of dedication. Image from Maine Memory Network.

The complex was listed on the National Register of Historic Places in 1979 by members of the dwindling congregation; however, in 1986 the complex was deconsecrated and sold into private ownership. In 1990, the complex was designated as a local individual Landmark. Shortly thereafter in 1993, the property was purchased by Deirdre Nice with the vision of rehabilitating the Sanctuary and Parish Hall into a performing arts and community center. In 1996, Friends of St. Lawrence Church, the current owners, was established and took ownership of the property beginning rehabilitation of the Parish Hall. Rehabilitation work continued into the early 2000s with the first production being held in the Parish Hall theatre in May 2001.

In 2006, the Friends of St. Lawrence Church turned their attention to the Sanctuary; however, as plans were being developed for its rehabilitation into a theatre space, it was determined that the structure had deteriorated so severely over the prior decades that it could not be salvaged. In 2008, the condition of the Sanctuary was reviewed by the Historic Preservation Board and the structure was approved for demolition, which took place that year.

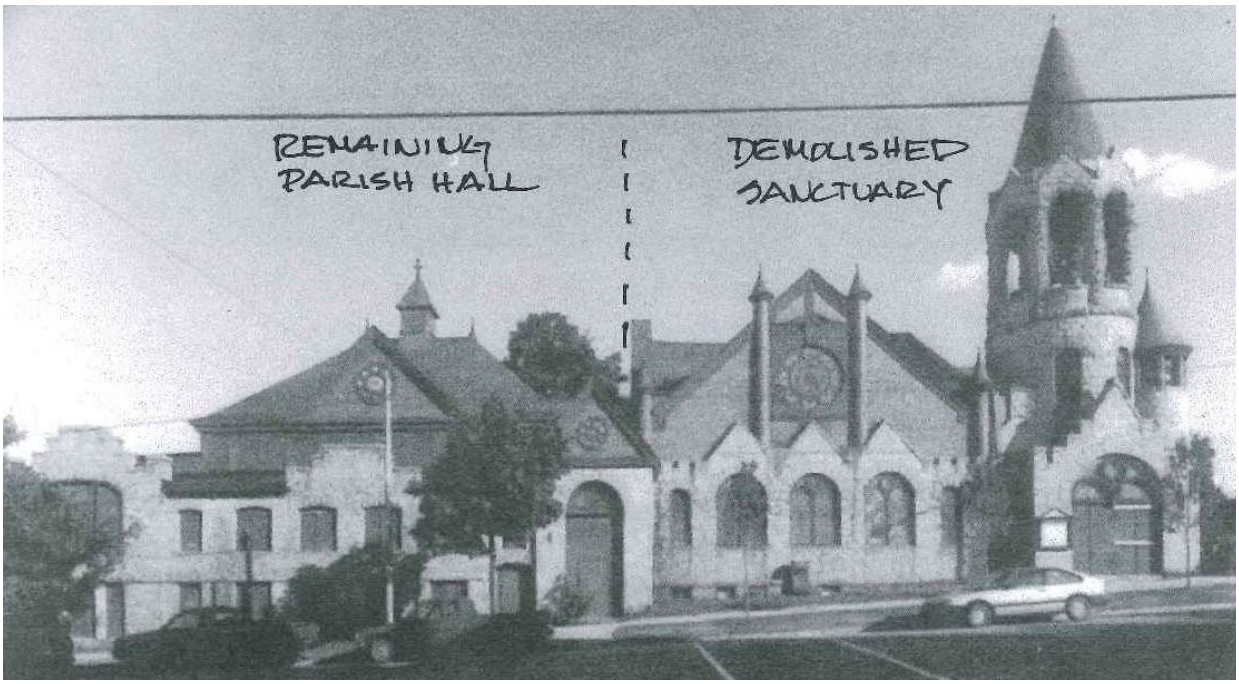

Figure 2: St. Lawrence Church showing the Sanctuary (demolished in 2008) and area of the Parish Hall (extant), now St. Lawrence Arts. Image from December 5, 2012 Historic Preservation Board Packet (attachment 2).

In 2010, the Friends of St. Lawrence moved forward with plans to reconstruct the Sanctuary around a modern theatre with review and approval by the Historic Preservation Board. However, as the project was further developed, it was determined that reconstruction of the Sanctuary would be prohibitively expensive. The decision was made by the Friends of St. Lawrence to instead pursue construction of a new theatre structure on the site of the Sanctuary with a contemporary design. Between 2012 and 2014, the Historic Preservation Board held four workshops for the project.

In 2010 the Friends of St. Lawrence received approval of a Conditional Zone Agreement from City Council, later amended in 2014 and valid for a period of ten years. In 2017 they received approval of a Major Site Plan from the Planning Board. The original Site Plan Approval had expired; however, on May 9, 2023 the Planning Board reapproved the Site Plan application.

Since 2014, the site has also been incorporated into the Munjoy Hill Historic District, which was designated in 2021, while retaining its Individual Landmark designation. As can be seen in the map below, the entirety of the Munjoy Street elevation, the whole side elevation off of Munjoy Street, and a portion of the Congress Street elevation follow the district boundary. About half of the Congress Street elevation of the new structure, the side elevation off of Congress Street, and the entirety of the Parish Hall are contained within the Munjoy Hill Historic District Boundary.

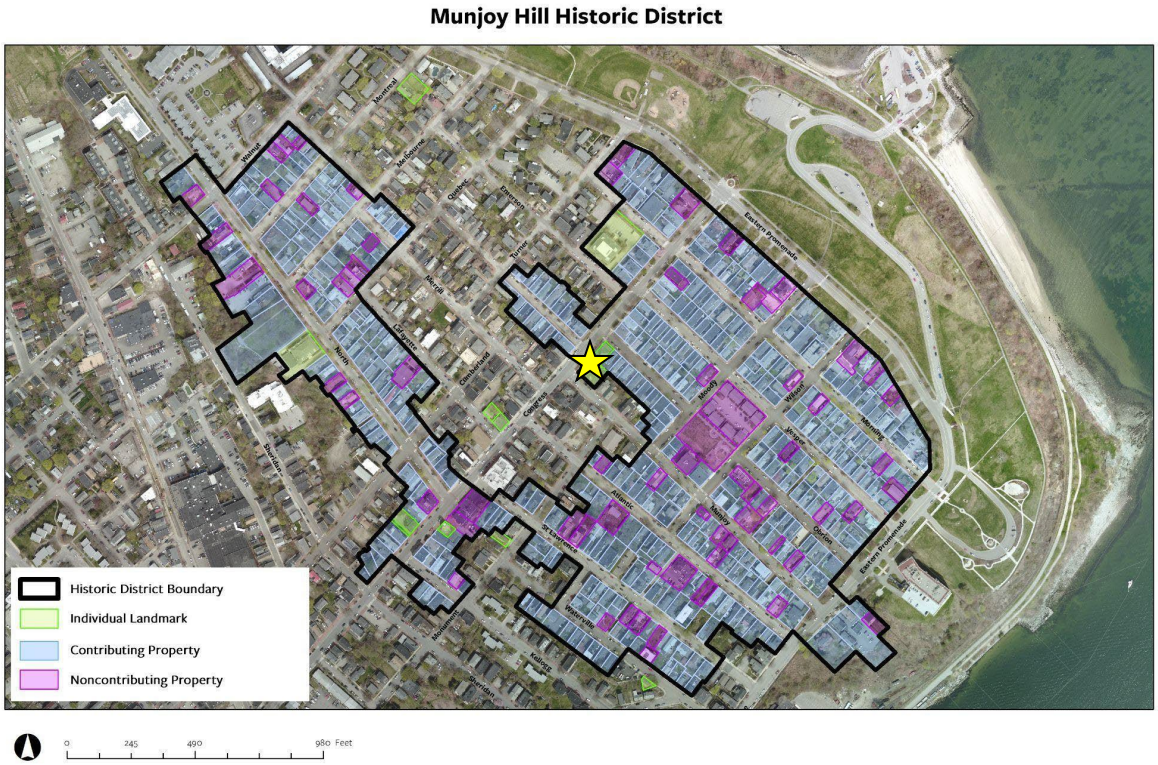

Figure 3: Map of the Munjoy Hill Historic District showing location of 76 Congress Street with a yellow star.

While it is worth noting the creation of the historic district around the St. Lawrence Church site, it should have minimal impact on the Board's review. Given the site's designation as an Individual Landmark, the proposed structure is considered an addition to the historic structure of the Parish Hall. Previous staff comments and Board deliberations generally looked to the Parish Hall and the now-demolished Sanctuary as the source material for compatibility. While typically additions to historic structures would want to be more deferential in respecting the scale of the historic structure, the Board had discussed some special allowances for the scale of the proposed addition in this case. Given its proposed programming and that it is a replacement structure for the Sanctuary, which was the primary structure of the historic church complex, the Board had not found that the scale of the new theatre addition should exactly match that of the Parish hall. The Board provided early recommendations that the overall scale and form of the structure could be reduced to show respect for the surrounding residential character, recommendations which were incorporated into the design.

PREVIOUS REVIEWS BY HISTORIC PRESERVATION BOARD

As has been mentioned above, the Board should note that this project went through four prior Workshops between December 5, 2012 & November 5, 2014. After a long gap, the project returned to the Board for a workshop on September 7, 2022, and again on April 19, 2023:

April 19, 2023, Workshop:

During the April 19 workshop, the Board continued to provided generally favorable feedback towards the proposal, though there were questions about the connection to the Historic Parish Hall, the materiality of the perforated metal cladding, and the lighting.

Regarding the connection to the Historic Parish House, Board members had questions about how the addition would interface with the existing architecture, noting that at present, the area of the former church is covered with corrugated metal. The applicant responded that the addition would connect at the basement and first floor, and then above that, there would be a gap between the existing and proposed building. The applicant also stated that the wall of the existing building would be re-clad in a new break metal where the sanctuary used to connect and the interior masonry would otherwise be exposed.

Board members also raised questions about the proposed perforated metal cladding material. The applicant had changed the proposed material from a gray/greenish color to a redish/rust color. Several Board members expressed reservations at how this color palette would relate to the historic structure. Several Board members also requested that renderings be provided so that the appropriateness of the proposed color could be assessed.

Finally, several Board members also posed questions about the proposed lighting scheme, expressing concerns that the backlighting of the perforated metal might not be compatible with the context if it were too intense. Some members suggested creating a mock-up of the lighting, but the applicant stated that might be challenging to achieve at a reasonable scale. At minimum, Board members requested additional nighttime renderings to show the design intent of the lighting.

STAFF COMMENTS ON CURRENT PROPOSAL



Figure 4: Daytime rendering of September 6, 2023 proposal looking from across Congress and Munjoy Street.



Figure 5: Nighttime rendering of September 6, 2023 proposal looking from across Congress and Munjoy Street.

Since the April 19 workshop, the applicant has made a few adjustments to the design, including a change in the connection between the existing and proposed buildings, and a change in the color of the perforated metal cladding. The applicant has also provided some additional information including more nighttime renderings and on granite cleaning.

The connection between the existing parish house and the proposed addition has been adjusted to eliminate the gap between them at above the first floor. Instead, the applicant is now showing a recessed connecting element on the addition that extends to above the ridge of the existing parish house. While this change does increase the physical connection between the buildings, in some ways it simplifies the design by allowing the addition to cover over the area where the sanctuary

used to connect, eliminating the need for a separate cladding material at the parish hall to cover interior masonry and protect the structure from the elements. The design does still retain a recess helping to delineate the old and new, and allowing the more decorative elements of the parish hall, including an stained glass arched window at the first floor, to remain visible.

The applicant has also revised the color of the perforated metal cladding from a reddish/rust color to a green. As shown in the renderings, this color appears to be more compatible with the greys and greens of the slate and copper gables and roof of the parish hall, while retaining a contrast to the gray of the lower, granite-clad portions of the addition.

Regarding the Board's questions about lighting, the applicant has responded that they did not feel that a lighting mock-up would accurately portray the final product and has therefore declined to produce a mock-up. Instead they have provided additional nighttime views and the lighting details provide by their lighting designer. These renderings generally show that they intend the lighting to simply create a modest glow. It should also be reiterated that the lighting will need to comply with city standards as reviewed through the Site Plan process.

Finally, the applicant has completed a mock-up cleaning of the granite on the Parish House. They have provided images of the cleaned granite next to the existing conditions, an image of the cleaned granite next to the sample of the granite proposed for the addition, and information on the cleaning product used during the test.

ANALYSIS OF APPLICABLE REVIEW STANDARDS

Standards for Review of New Construction, 17.8.3:

Standard A. Scale and Form	
1. Height The proposed height shall be visually compatible with surrounding structures when viewed from any street or open space and in compliance with any design guidelines.	
Standard Met?	**Staff Comments**
Yes	The proposed structure will be taller than the historic Parish hall, and taller than most structures found within the Munjoy Hill Historic District. However, its overall scale in relationship to the former Sanctuary and some of the larger structures throughout the district (such as the former Emerson School or some four-story mixed-use structures) is not outside of historic precedents.

2. Width The width of a building shall be visually compatible with surrounding structures when viewed from any street or open space and in compliance with any design guidelines.	
Standard Met?	Staff Comments
Yes	The width of the proposed structure is greater than typical of most residential buildings in the Munjoy Hill District. However, this is not a residential building nor is it expected to have the form of one, and the width is compatible with/even slightly less than the width of the historic Parish Hall.
3. Proportion of principal facades The relationship of the width to the height of the principal elevations shall be visually compatible with structures, public ways, and open spaces to which it is visually related.	
Standard Met?	Staff Comments
Yes	The proposed structure is wider and more horizontal than typical structures found throughout the Munjoy Hill Historic District, but as noted above, this structure is not expected to be designed as a residential structure. Its horizontality is compatible with the Parish Hall. The vertical corner element is also compatible with the form of the demolished sanctuary.
4. Roof shapes The roof shape of a structure shall be visually compatible with the structures to which it is visually related.	
Standard Met?	Staff Comments
Yes	The proposed structure will have a flat roof, which is quite distinct from the sloped hip and gable roofs of the Parish Hall. However, the structure does have a more complicated and broken up massing which relates visually to the more complicated massing and multiple roofs of the Parish hall. Additionally, flat roofs are quite common throughout the Munjoy Hill Historic District.
5. Scale of a structure The size and mass of structures in relation to open spaces, windows, door openings, porches, and balconies shall be visually compatible with the structures, public ways, and places to which they are visually related.	
Standard Met?	Staff Comments
Yes	The overall scale and broken-up massing of the proposed structure, as well as its use of punched openings and use of a large, open entrance are visually compatible with the historic Parish Hall and demolished Sanctuary.

Standard B. Composition of Principle Facades	
1. Proportion of openings The relationship of the width to height of windows and doors shall be visually compatible with structures, public ways, and places to which the building is visually related.	
Standard Met?	Staff Comments
Yes	Openings on the proposed structure have a generally vertical orientation with some larger groupings of openings at the first floor, as is also seen on the Parish Hall.
2. Rhythm of solids to voids in facades The relationship of solids to voids in the façade of a structure shall be visually compatible with structures, public ways, and places to which it is visually related.	
Standard Met?	Staff Comments
Yes	While the overall façade of the structure is much more solid than the parish Hall, the articulation at the masonry portions of the façade provides a strong visual reference to the Parish hall and Sanctuary.
3. Rhythm of entrance porch and other projections The relationship of entrances and other projections to sidewalks shall be visually compatible with the structures, public ways, and places to which they are visually related.	
Standard Met?	Staff Comments
Yes	The rhythm of the entrance porch along Congress Street, vertical corner tower, and broken-up projections along Munjoy Street relate the adjacent structures, providing a compatible relationship to neighboring structures.
4. Relationship of materials The relationship of the color and texture of materials (other than paint color) of the facade shall be visually compatible with the predominant materials used in the structures to which they are visually related.	
Standard Met?	Staff Comments
Yes	The proposed use of granite at the lower levels of the proposed structure provides a strong connection to the historic Parish Hall and the color of the proposed metal screen provides a reference to the slate and copper of the gables and roof of the Parish Hall.
5. Signs Any new sign, and any change in the appearance of an existing sign located on a landmark, within a historic district, or within an historic landscape district, which is readily visible from any street or open space shall not be incongruous to the historic character of the landmark or district and shall comply with the criteria and guidelines specified in the Historic Resources Design Manual.	
Standard Met?	Staff Comments
Yes	While integrated signage, such as is proposed here, is not typical within the Munjoy Hill Historic District, it is something seen on cultural and institutional buildings.

Standard C. Relationship to Street	
1. Walls of continuity Facades and site structures, such as masonry walls, fences, and landscape masses, shall, when it is a characteristic of the area, form cohesive walls of enclosure along a street to ensure visual compatibility with the structures, public ways, and places to which such elements are visually related.	
Standard Met?	Staff Comments
Yes	The proposed structure will help to re-enclose Congress Street, recreating the section of street wall left missing by demolition of the Sanctuary. The proposed structure also continues the pattern of a fairly solid, but not uninterrupted street wall with recesses and projections that break up and add relief along Congress Street.
2. Rhythm of spacing and structures on streets The relationship of a structure or object to the open space between it and adjoining structures or objects shall be visually compatible with the structures, objects, public ways, and places to which it is visually related	
Standard Met?	Staff Comments
Yes	The proposed structure reinforces a pattern of a semi-solid street wall along congress street through its large façade, broken up by projections and recesses allowing points of relief between buildings.
3. Directional expression of principal elevation A structure shall be visually compatible with the structures, public ways, and places to which it is visually related in its directional character, whether this be vertical character, horizontal character, or nondirectional character.	
Standard Met?	Staff Comments
Yes	The proposed structure is more horizontal than typical of the surrounding context. However, its horizontality is also seen on the historic Parish hall and is accentuated by the proposed corner element.

Standard D. Other Standards	
1. Compatible use Every reasonable effort shall be made to provide a compatible use for a property which requires minimal alteration to the character defining features of the structure, object, or site and its environment or to use a property for its originally intended purpose.	
Standard Met?	Staff Comments
Yes	The historic Sanctuary and Parish Hall were constructed for community assembly uses and the proposed theatre will continue that use.

2. Distinguishing original character The distinguishing original qualities or character of a structure, object, or site and its environment shall not be destroyed. The alteration of any historic material or distinctive architectural features should be avoided when possible.	
Standard Met?	Staff Comments
Yes	The proposed addition will not destroy the distinguishing original character of the historic Parish Hall.
4. Contemporary design Contemporary design for additions to existing properties shall not be discouraged when such alterations and additions do not destroy significant cultural, historical, architectural, or archaeological materials that characterize the property. The new work shall be differentiated from the old and shall be compatible with the size, scale, material, and character of the property, neighborhood and environment.	
Standard Met?	Staff Comments
Yes	The proposed addition is clearly contemporary and clearly differentiated from the historic Parish Hall Structure.
5. Additions Wherever possible, new additions to structures and objects shall be undertaken in such a manner that, if such additions were to be removed in the future, the essential form and integrity of the structure would be unimpaired.	
Standard Met?	Staff Comments
Yes	The applicant has provided details showing that the proposed addition will be attached in a sensitive way that would retain the form and integrity of the structure if ever removed.

MOTION FOR CONSIDERATION

I move to APPROVE application HPBR-002025-2022 for an addition at 76 Congress Street on the basis of submitted documentation, plans, and specifications; information provided in the staff memo; and findings by the Historic Preservation Board that the project meets Standards for Review of New Construction 17.8.3- A.1-5, B.1-5, C.1-3, D.1-2, & D.4-5.

ATTACHMENTS

1. Project Summary & Drawings
2. Lighting Summary, Drawings, & Products
3. Granite Cleaning Information

ARCHETYPE ARCHITECTS

48 Union Wharf, Portland Maine 04101

207.772.6022

June 29, 2023

Evan Schueckler
Historic Preservations Program Manager
Portland City Hall
389 Congress Street
Portland, Maine 04101

RE: The Hill Arts

Dear Evan,

We are pleased to resubmit designs for The Hill Arts, formally called Saint Lawrence Arts . Following are adjustments made since our last meeting.

1. We looked into doing a mock up for the perforated metal and lighting but in talking this over with the lighting designer it was decided that the best way to show what effects the lighting will have was to develop nighttime renderings. The lighting designer has written a narrative and please keep in mind that the lighting is on a dimmer and of course all lighting must conform to the City of Portland's lighting ordinance.
2. In reviewing the renderings with different color options for the perforated metal we have changed the color to a light green.
3. A comment was made to bring some of the architecture from the original church into the new addition. While we feel this undermines the integrity of the addition, we have found some original pink granite including a stone stating St Lawrence Congregational Church which we will embed in the new porch, we have included a picture.
4. We have reincorporated renderings in neighborhood context.
5. In studying the connection from existing to new ,we are redesigning the open slot, to be closed in.
6. The material over the overhead door has been changed to match the door itself.
7. We are now fully approved by the planning board.

Thank you for your input and we would be glad to meet if you think it will help.

Respectfully,



David Lloyd
Maine Licensed Architect #936
Consultant to Archetype Architects


THE HILL ARTS
118
FIRE STATION
OBSERVATORY

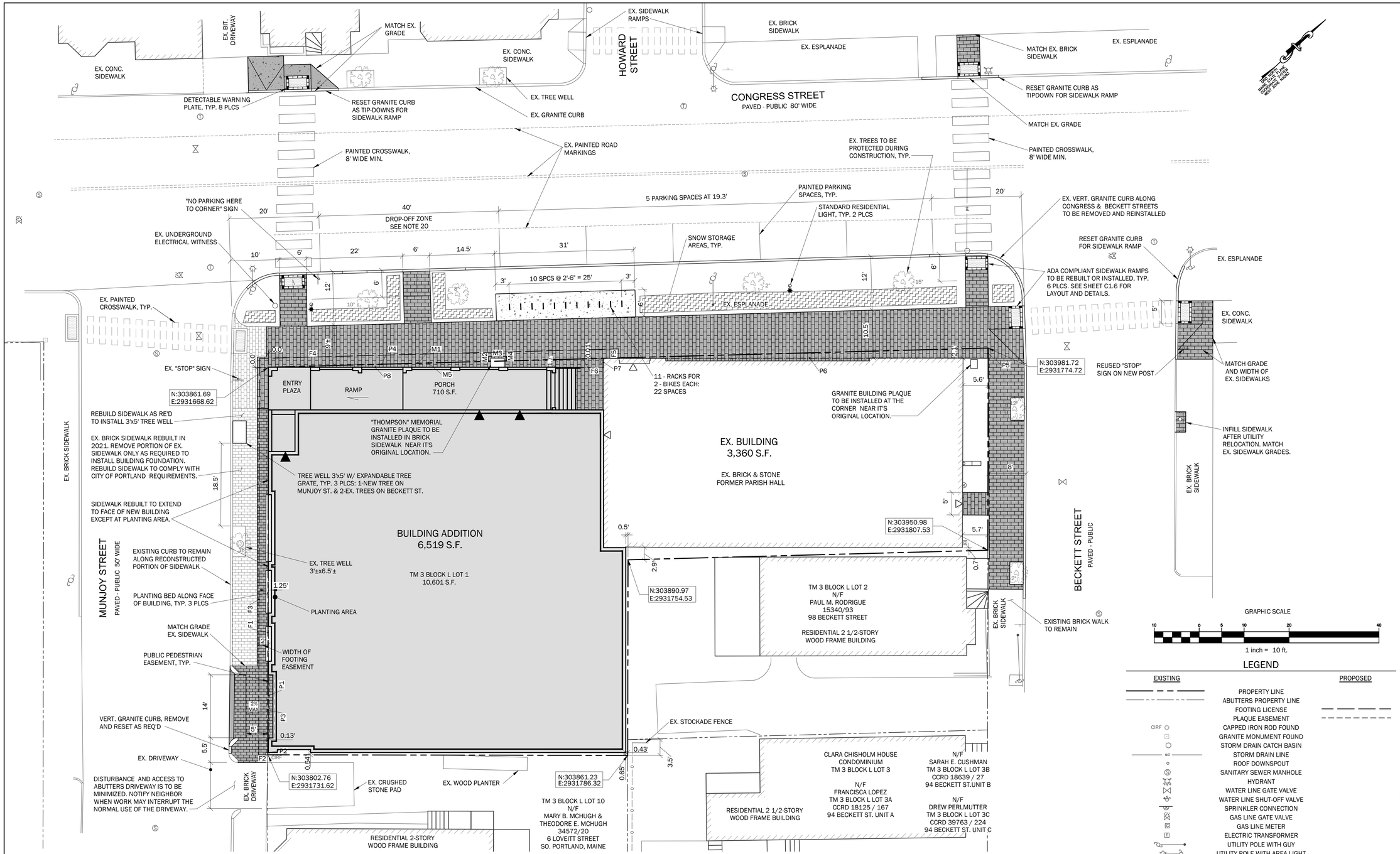

EASEMENTS & LICENSES:

1. PROPOSED TEMPORARY EASEMENT: CONSTRUCTION EASEMENT FROM CITY OF PORTLAND TO THE FRIENDS OF ST. LAWRENCE CHURCH.
2. PROPOSED LICENSE: FROM THE CITY OF PORTLAND TO THE FRIENDS OF ST. LAWRENCE CHURCH FOR BUILDING FOOTINGS.
3. PROPOSED LICENSE: FROM THE CITY OF PORTLAND TO THE FRIENDS OF ST. LAWRENCE CHURCH FOR "THOMPSON" MEMORIAL PLAQUE PLACEMENT.

FOOTING LICENSE

LINE	BEARING	DISTANCE
F1	S 46°54'30" E	86.27'
F2	S 43°05'30" W	2.00'
F3	N 46°54'30" W	88.21'
F4	N 41°28'30" E	79.94'
F5	S 48°31'30" E	2.00'
F6	S 41°28'30" W	78.00'

MEMORIAL PLAQUE LICENSE

LINE	BEARING	DISTANCE
M1	N 41°28'30" E	49.00'
M2	N 46°59'46" W	1.11'
M3	N 43°00'14" E	4.00'
M4	S 46°59'46" E	1.00'
M5	S 41°28'30" W	4.00'

PUBLIC PEDESTRIAN EASEMENT - MUNJOY STREET

LINE	BEARING	DISTANCE
P1	S 46°59'00" E	83.48'
P2	S 43°05'03" W	0.13'
P3	N 46°54'30" W	83.48'

PUBLIC PEDESTRIAN EASEMENT - CONGRESS STREET

LINE	BEARING	DISTANCE
P4	N 41°28'30" E	160.20'
P5	S 46°54'41" E	2.25'
P6	S 42°58'23" W	85.55'
P7	S 47°00'00" E	1.98'
P8	S 43°00'00" W	74.59'

FOR ZONING, CITY NOTES, GENERAL NOTES AND LAYOUT, MATERIALS & UTILITY NOTES SEE SHEET C1.0

LEGEND

EXISTING		PROPOSED
	PROPERTY LINE	
	ABUTTERS PROPERTY LINE	
	FOOTING LICENSE	
	PLAQUE EASEMENT	
CIRF	CAPPED IRON ROD FOUND	
	GRANITE MONUMENT FOUND	
	STORM DRAIN CATCH BASIN	
sd	STORM DRAIN LINE	
	ROOF DOWNSPOUT	
S	SANITARY SEWER MANHOLE	
	HYDRANT	
	WATER LINE GATE VALVE	
	WATER LINE SHUT-OFF VALVE	
	SPRINKLER CONNECTION	
	GAS LINE GATE VALVE	
G	GAS LINE METER	
T	ELECTRIC TRANSFORMER	
	UTILITY POLE WITH GUY	
	UTILITY POLE WITH AREA LIGHT	
	STANDARD RESIDENTIAL LIGHT POLE	
T	TELEPHONE OR ELECTRICAL MANHOLE	
	BUILDING	
	BUILDING ENTRANCE	
	STOCKADE FENCE	
	SIGN	
	PLANTER / RETAINING WALL	
	BICYCLE RACK	
	BITUMINOUS PAVEMENT	
	CONCRETE PAD OR SIDEWALK	
	BRICK SIDEWALK	
	DETECTABLE WARNING	
	VERTICAL GRANITE CURB	
	GRANITE CURB "BUG"	
	TREE	
	SNOW STORAGE	

WALSH
ENGINEERING ASSOCIATES, INC.
One Karen Dr., Suite 2A | Westbrook, Maine 04092
ph: 207.553.9898 | www.walsh-eng.com

Copyright © 2023

ST. LAWRENCE ARTS, PERFORMANCE ARTS HALL

OWNER / APPLICANT:
FRIENDS OF THE ST. LAWRENCE CHURCH
76 CONGRESS STREET
PORTLAND, MAINE 04101

OWNER / APPLICANT:
76 CONGRESS STREET
PORTLAND, MAINE 04101

PROGRESS SET 6/5/2023 - NOT FOR CONSTRUCTION

Rev.	Date	Description	Drawn	Check

Sheet Title:
SITE PLAN

TAX MAP 3 / BLOCK L / LOT 1

Job No.:	777
Date:	DEC. 27, 2022
Scale:	AS SHOWN
Drawn:	JDC
Checked:	WRW

Sheet No.: C1.1



THE HILL ARTS

76 CONGRESS STREET PORTLAND, MAINE 04101

ARCHETYPE ARCHITECTS

48 Union Wharf Portland, Maine 04101


THE HILL ARTS
MURRAY



THE HILL ARTS

76 CONGRESS STREET PORTLAND, MAINE 04101

ARCHETYPE ARCHITECTS

48 Union Wharf Portland, Maine 04101


THE HILL ARTS
ONE WAY
HOWARD ST
SILVERADO


STOP

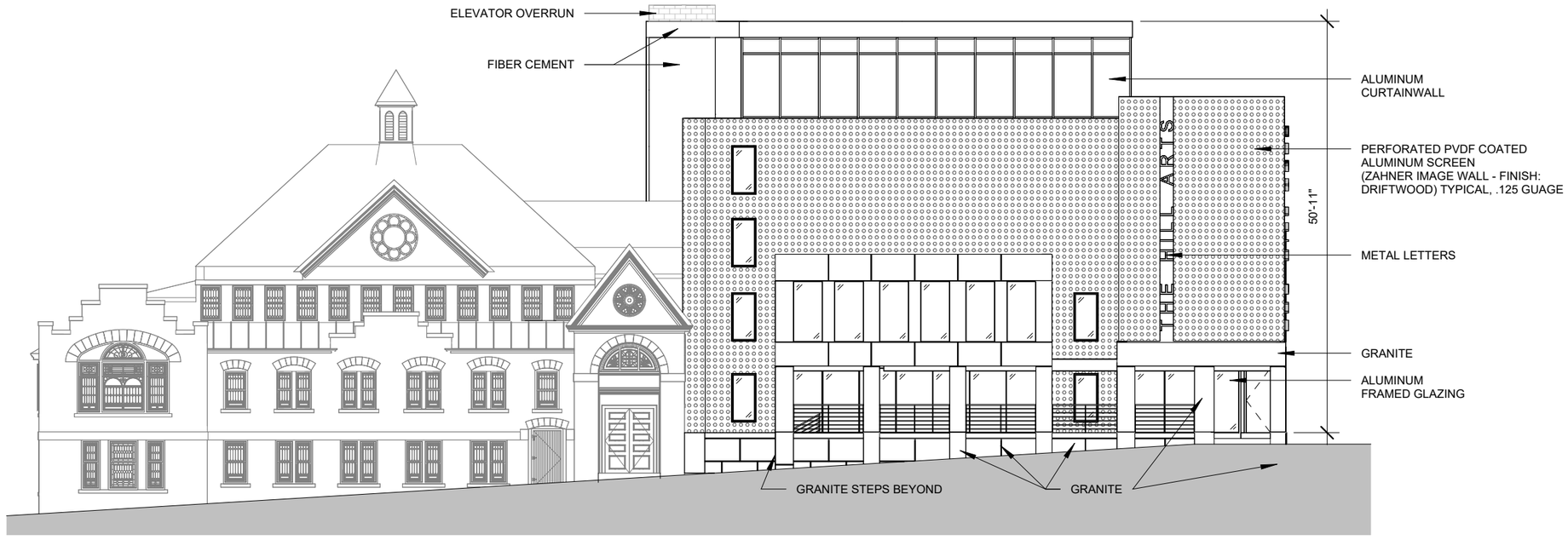

NORTH ELEVATION MATERIALS

1/16" = 1'-0"

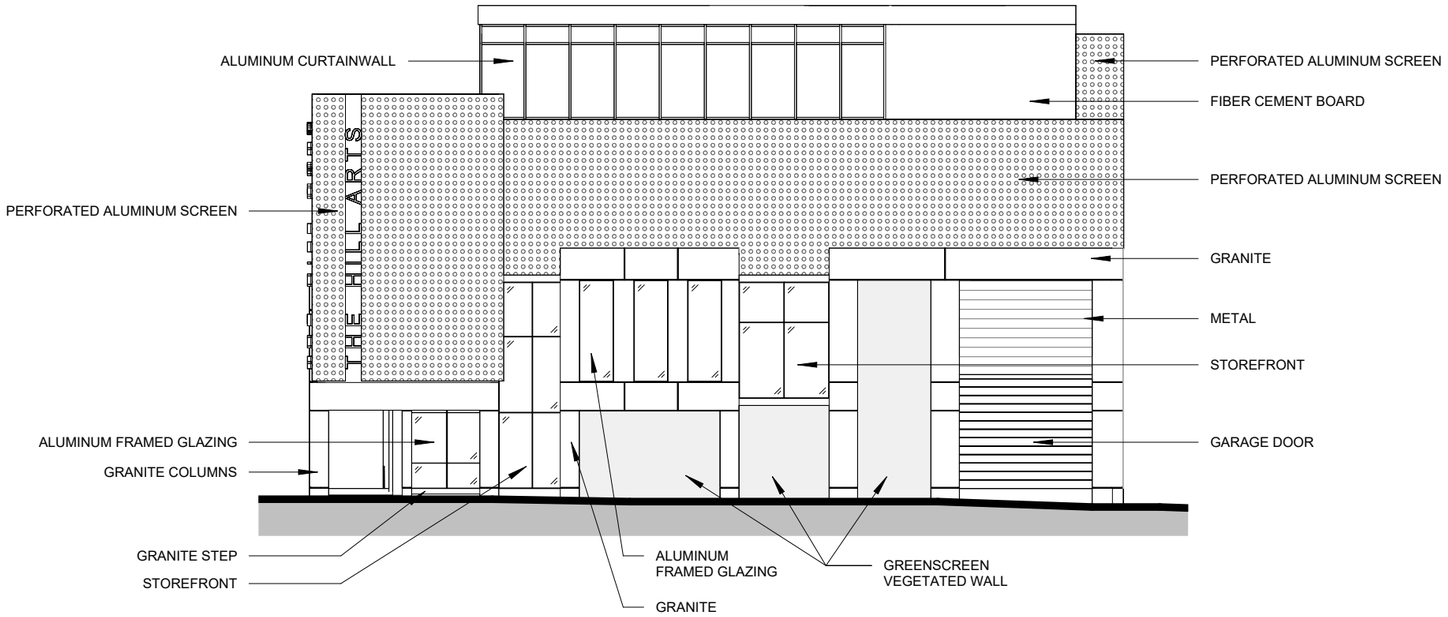

WEST ELEVATION MATERIALS

1/16" = 1'-0"

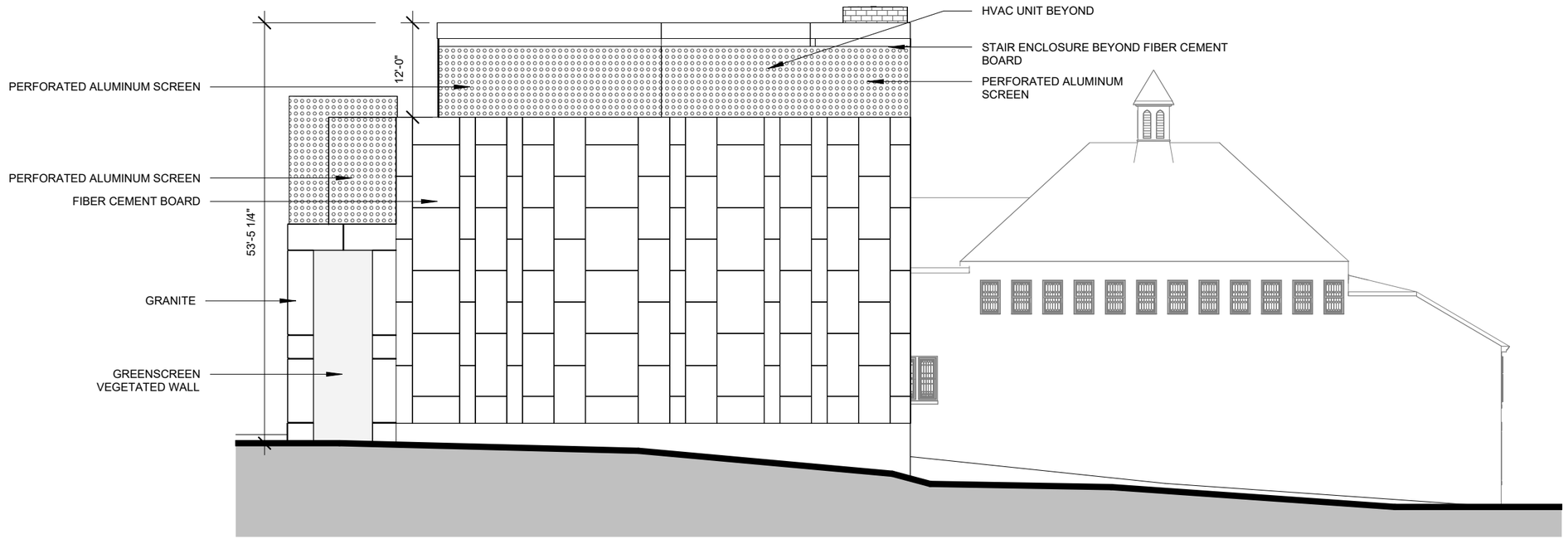

SOUTH ELEVATION MATERIALS

1/16" = 1'-0"



EAST ELEVATION MATERIALS

1/16" = 1'-0"

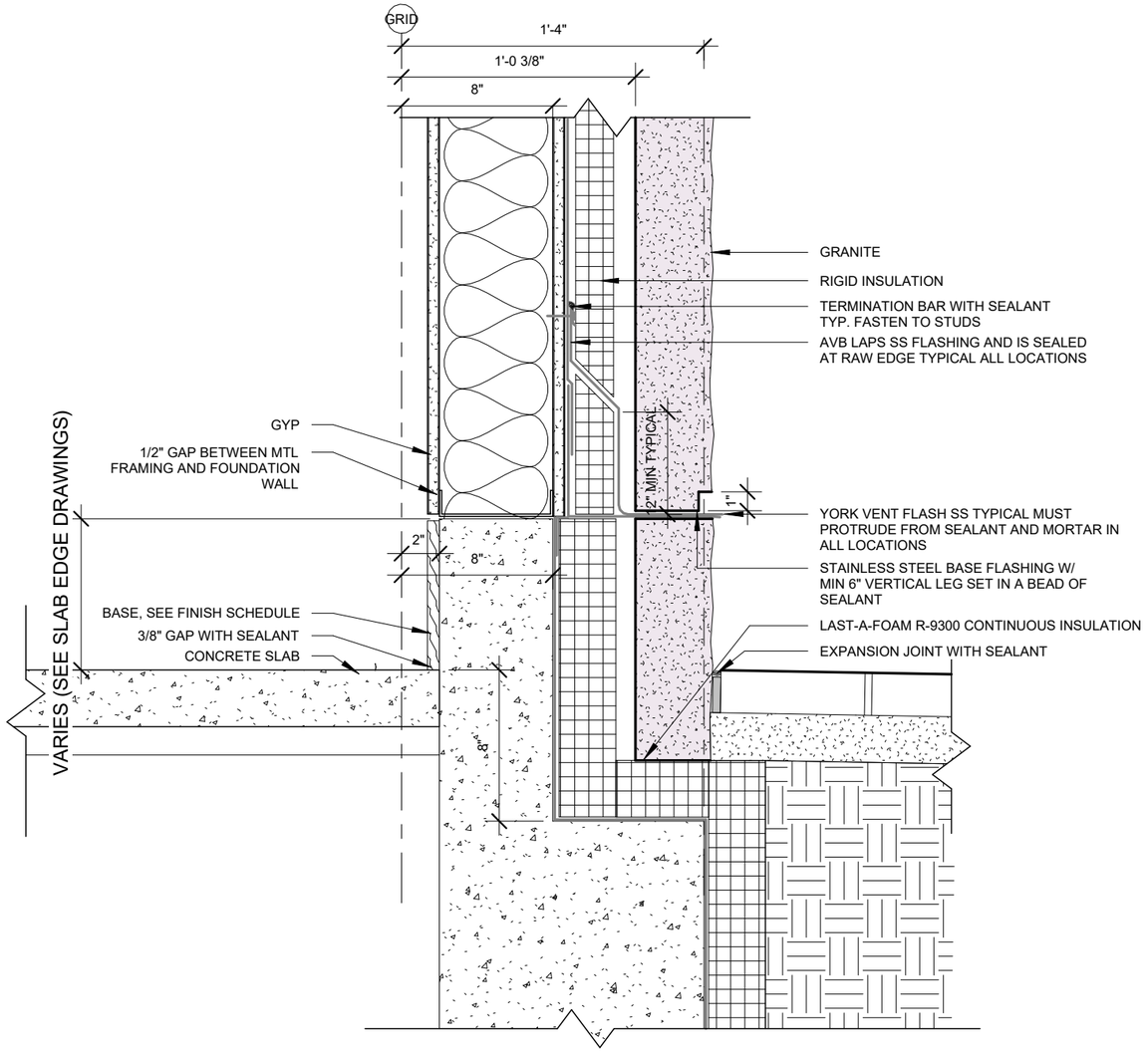

1 BASE OF WALL DETAIL AT GRANITE
1 1/2" = 1'-0"

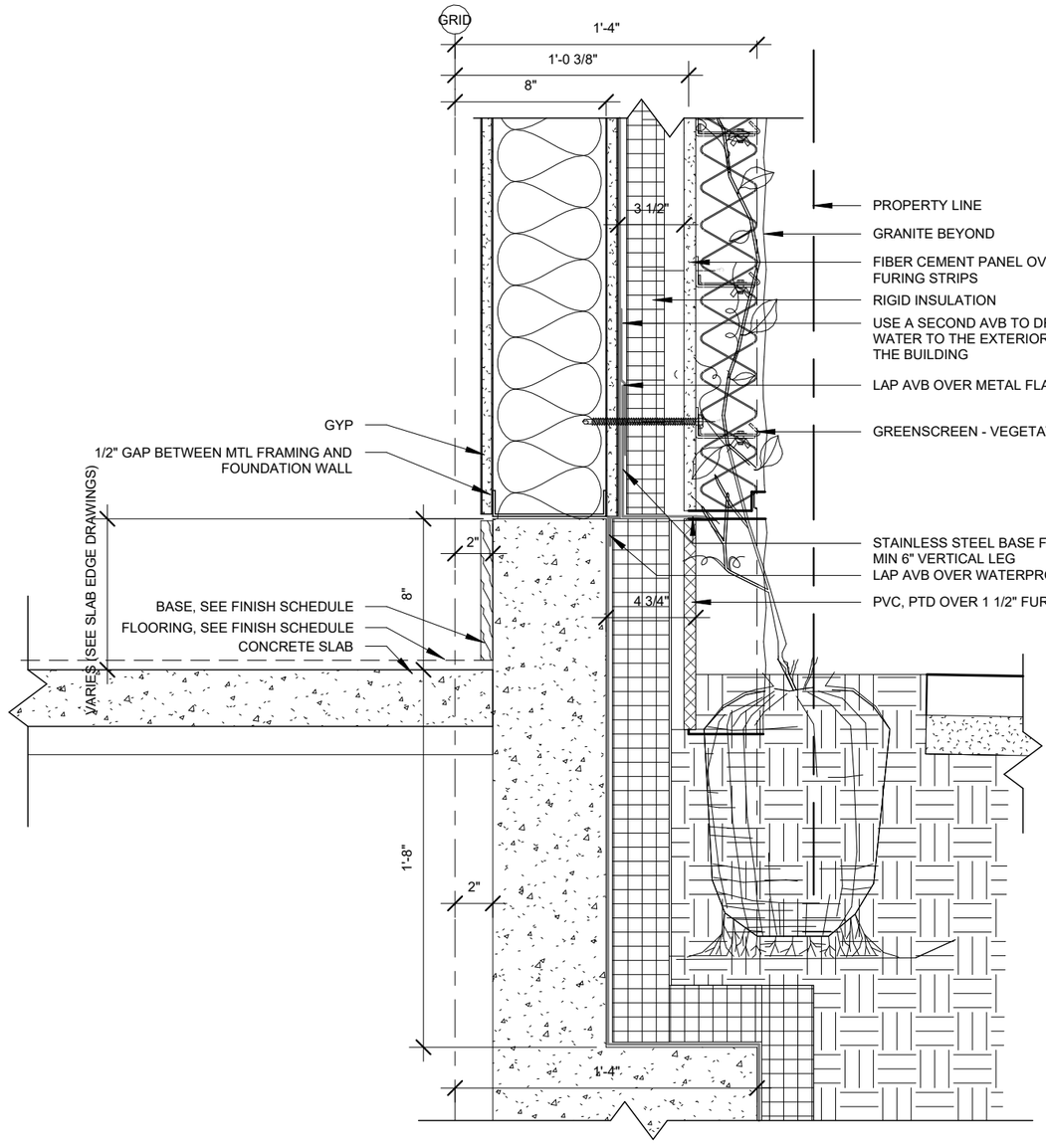

2 BASE OF WALL DETAIL AT GREENSCREEN
1 1/2" = 1'-0"

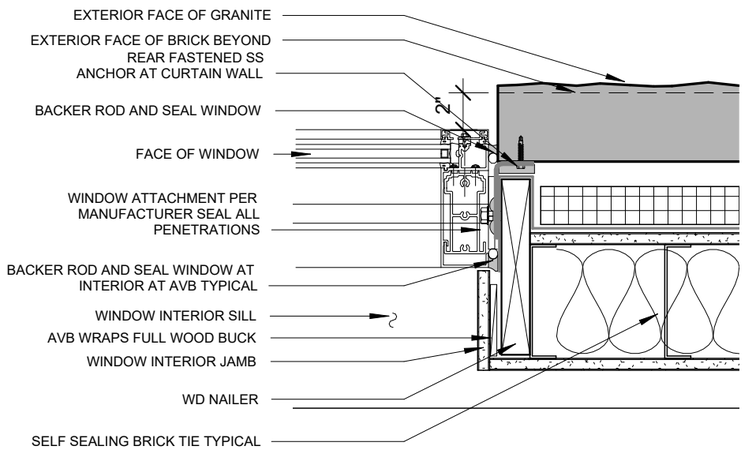

1 TYPICAL WINDOW DETAIL AT GRANITE
1 1/2" = 1'-0"

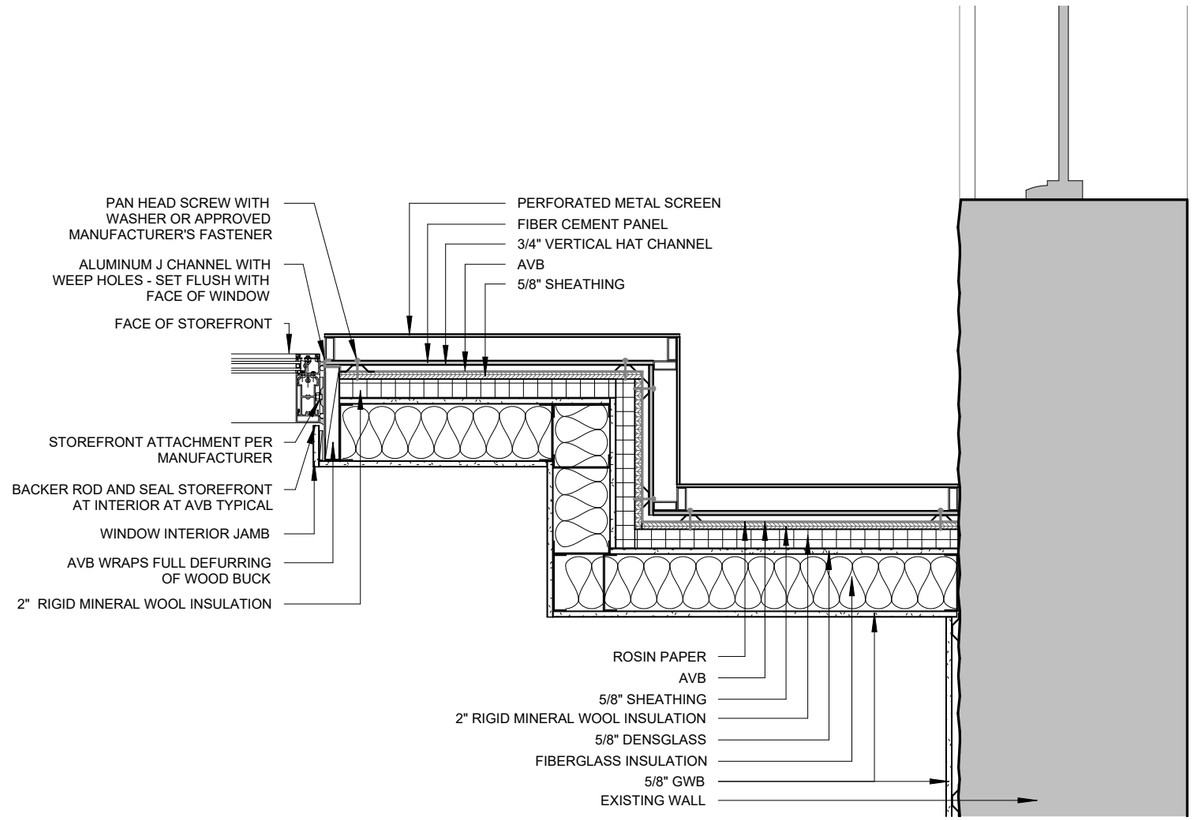

2 PLAN DETAIL - WALL INTERSECTION
3/4" = 1'-0"



SAMPLE OF SCREEN CLADDING AT NIGHT

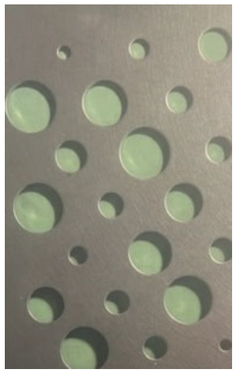

PROPOSED METAL SCREEN PATTERN



PROPOSED METAL SCREEN COLOR



EXISTING GRANITE FACADE



PROPOSED NEW GRANITE CLADDING AT ADDITION

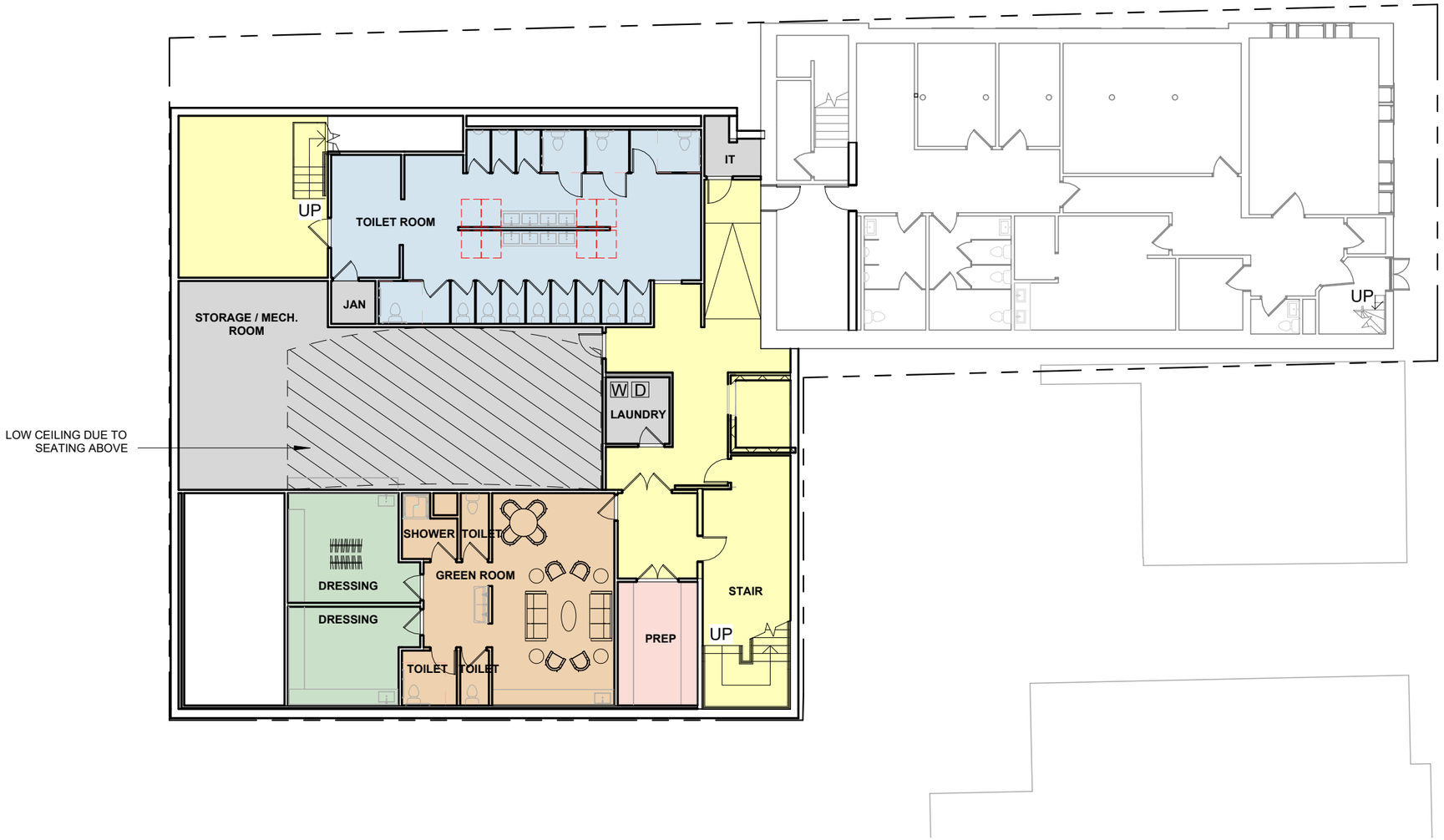

BASEMENT PLAN

1/16" = 1'-0"

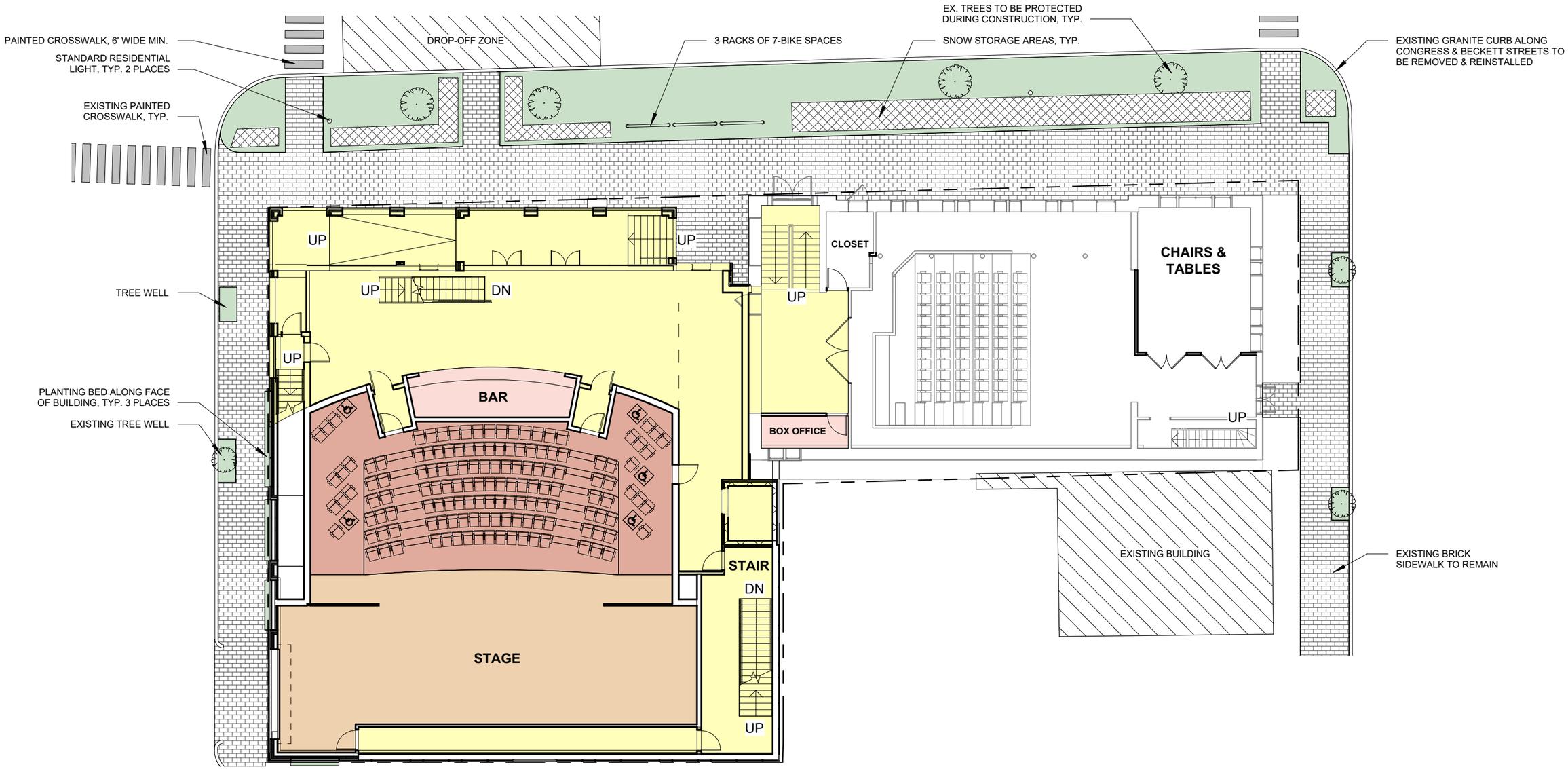

1ST FLOOR CONTEXT
1/16" = 1'-0"

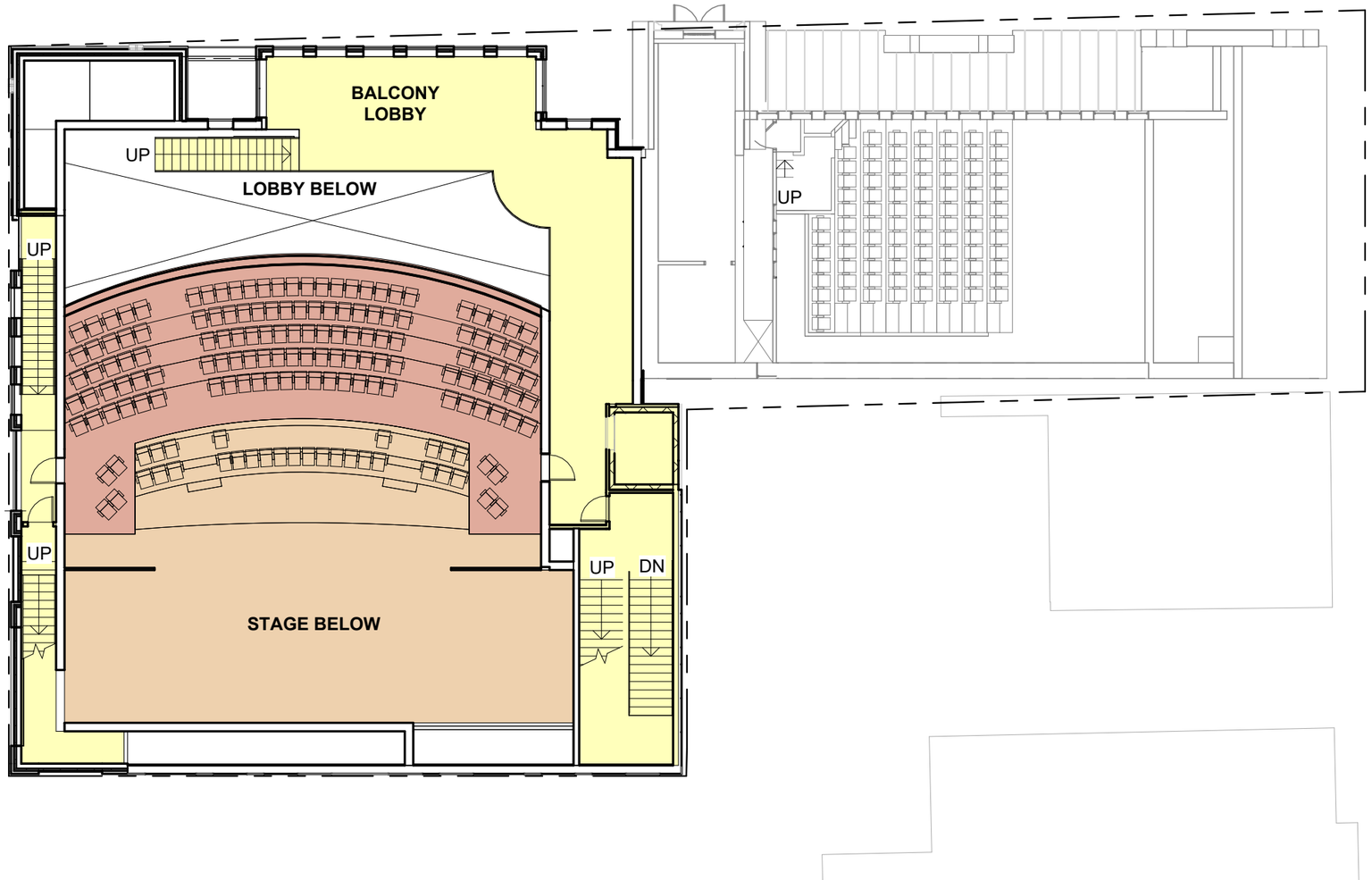

UPPER LOBBY LEVEL PLAN
1/16" = 1'-0"

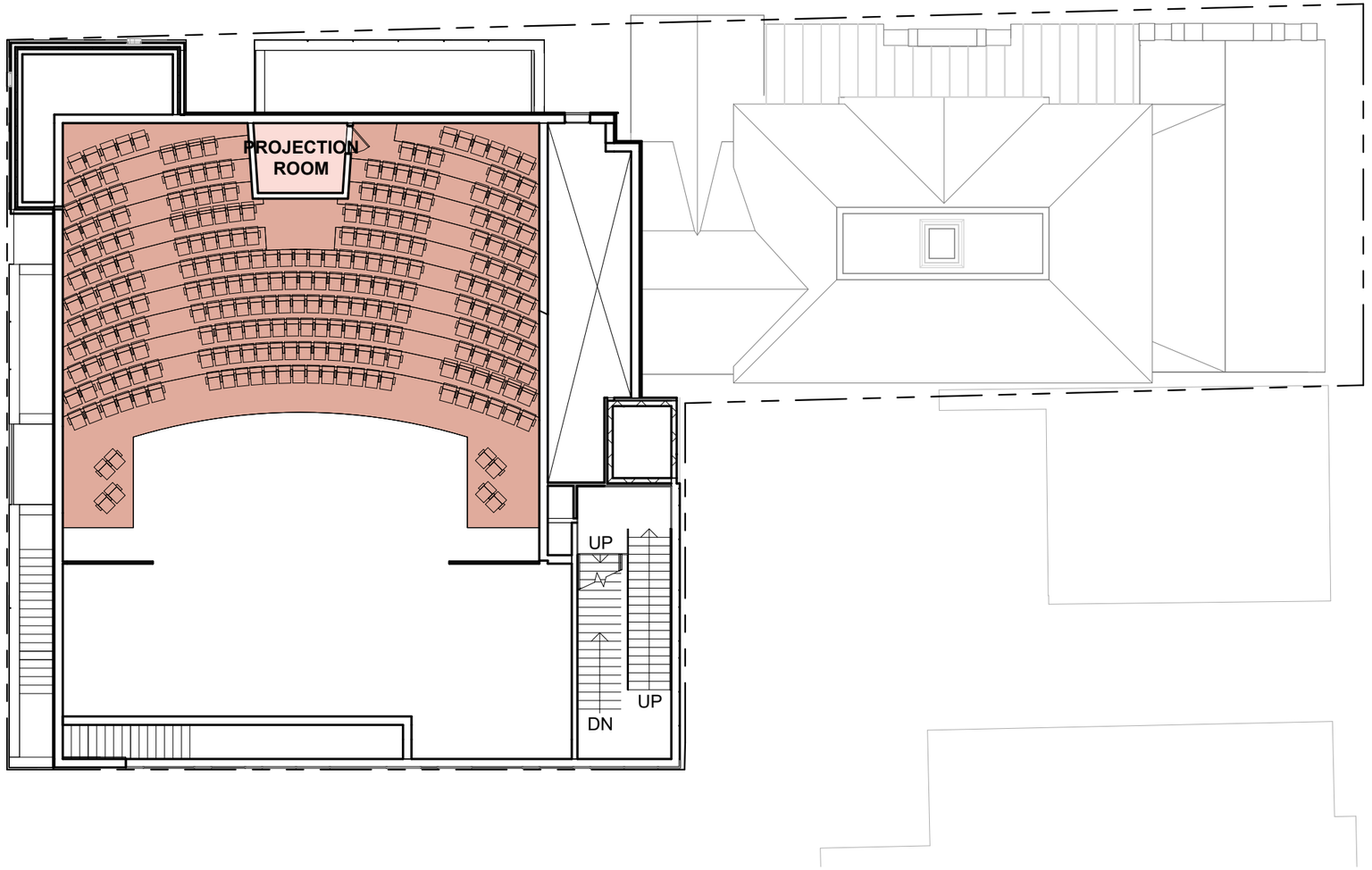

PROJECTION BOOTH PLAN

1/16" = 1'-0"

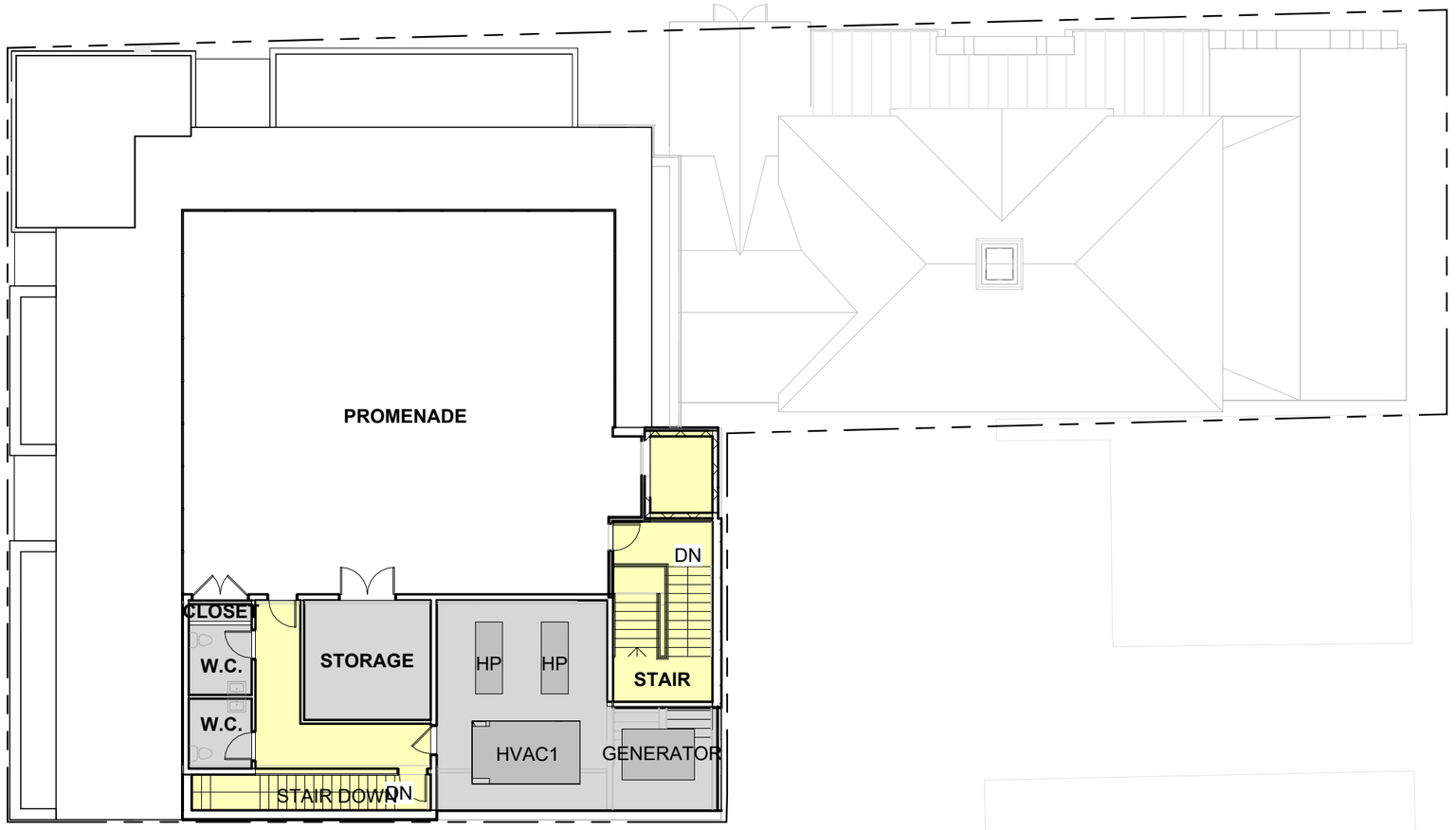

PROMENADE PLAN
1/16" = 1'-0"

Greg Day Lighting

1155 High Street Bath, Maine 04530 207.671.5551 gregdaylighting.com

ST LAWRENCE ARTS CENTER - EXTERIOR LIGHTING INTENT

Our plan is to evenly graze internal matte white walls with light that will be visible through holes in the perforated metal façade panels at the northwest corner (sign corner) of the building. This will be visible in a subtle way coming from both directions on Congress Street. Also, the edges of the perforations will catch the light and reflect interesting, sparkling light (note: this will also happen with sun light during the day).

The standard light color will be warm white, 2700 kelvin. In addition, the lights can be programmed to emit any color to celebrate special events or holidays, or to represent the current production within the theater. These lights will be off during appropriate times for a residential neighborhood.

The intention is to provide10 footcandles minimum and 20 footcandle maximum on the horizontal surface of the enclosed Entry walkway, ramp, and steps, with a minimum uniformity ratio of 3:1. There will be approximately an average of 1.25 footcandles (5.0fc max.) of spill light onto the adjacent sidewalks with no measurable light at adjacent properties.

There will also be a soft grazing light shining down on the vegetated wall segments on the Munjoy Street façade. These can be programmed to turn off when there is no vegetation if desired. These lights will also provide approximately an average of 1.25 footcandles (5.0fc max.) of light on the sidewalks with no measurable light at adjacent properties. These lights will also be off during appropriate times for a residential neighborhood.

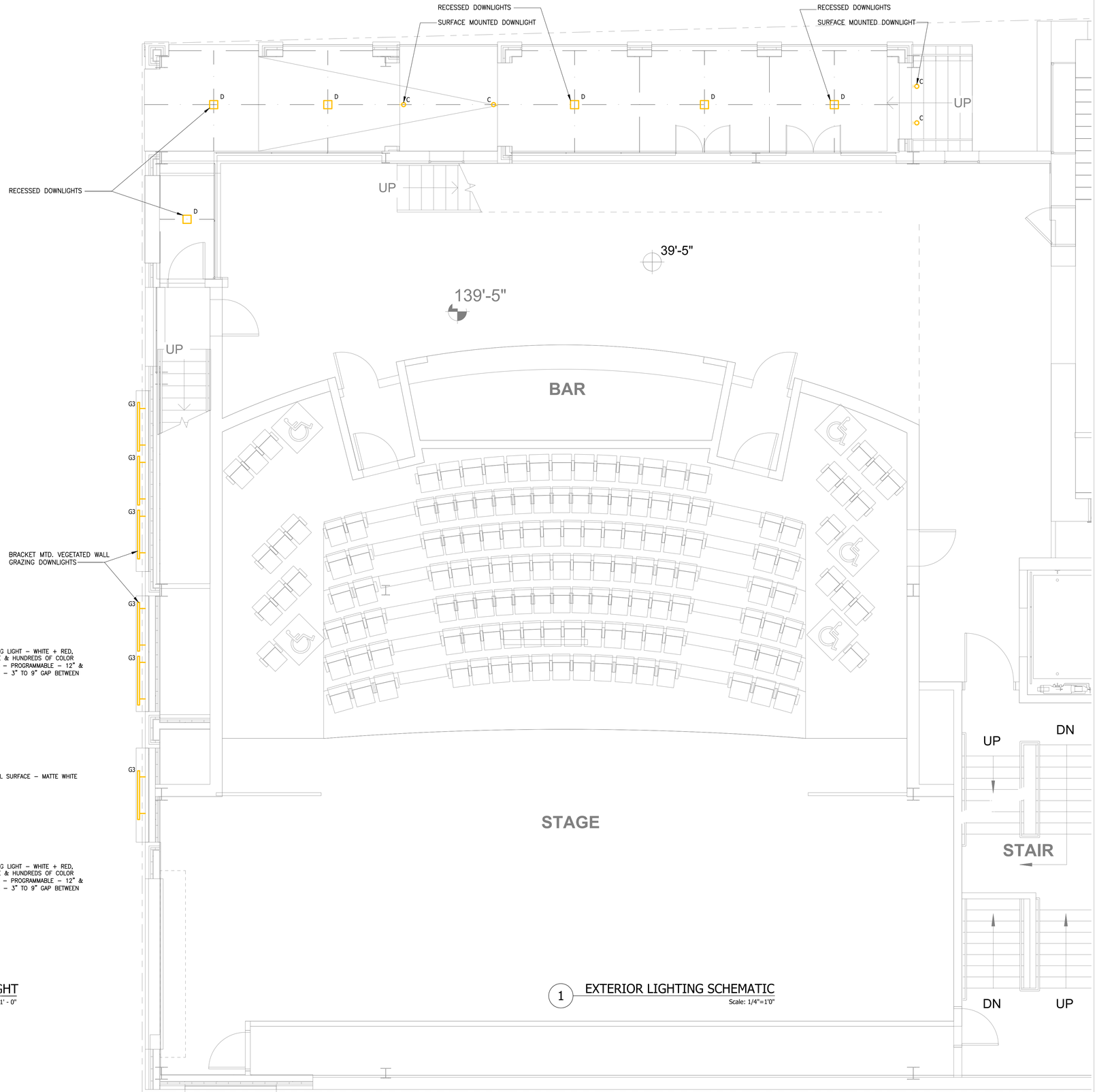

1 EXTERIOR LIGHTING SCHEMATIC
Scale: 1/4"=1'0"

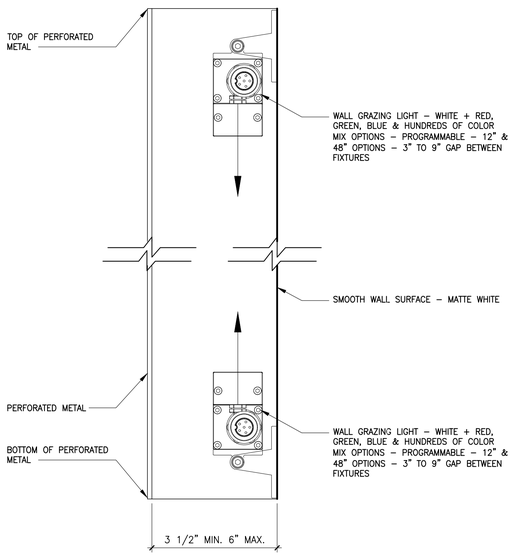

2 EXTERIOR WALL GRAZING LIGHT
Scale: 6" = 1' - 0"

ARCHETYPE
ARCHITECTS

Greg Day Lighting

Architectural Lighting Design

Bath Me US
New York US
London UK

info@gregdaylighting.com

Revisions

St Lawrence Arts

Portland, Maine

22 February 2023
Scale: As Noted

Drawing Title:
Lighting Plan

LT.1
Not For Construction

Copyright Greg Day Lighting, Inc

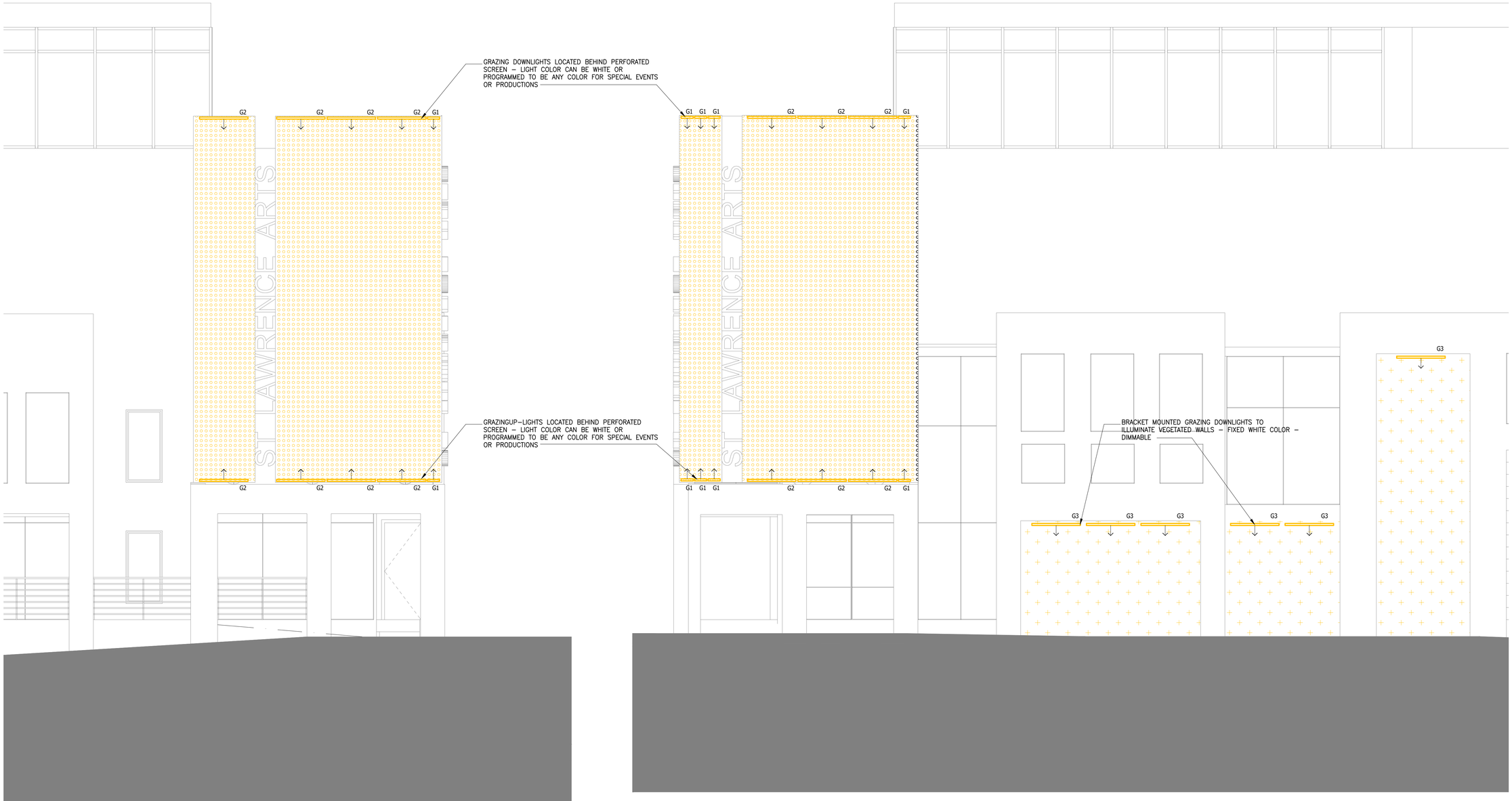

2 NORTH SCHEMATIC LIGHTING ELEVATION
Scale: 1/4"=1'0"

1 WEST SCHEMATIC LIGHTING ELEVATION
Scale: 1/4"=1'0"

ARCHETYPE
ARCHITECTS

Greg Day Lighting

Architectural Lighting Design

Bath Me US
New York US
London UK

info@gregdaylighting.com

Revisions

St Lawrence Arts

Portland, Maine

22 February 2023
Scale: As Noted

Drawing Title:
Lighting Plan

LT.2
Not For Construction

Copyright Greg Day Lighting, Inc

LED wall luminaire - shielded with forward throw **BEGA**

Application
This wall mounted LED luminaire features a forward throw light distribution and is designed for the general illumination of pathways and walkways from various mounting heights. Downlight applications only.

Materials
Luminaire housing constructed of die-cast marine grade, copper free (≤0.3% copper content) A360.0 aluminum alloy
Clear safety glass with optical texture
High temperature silicone gasket
Mechanically captive stainless steel fasteners

NRTL listed to North American Standards, suitable for wet locations
Protection class IP64
Weight: 3.7 lbs

Electrical

Operating voltage	120-277V AC
Minimum start temperature	-30° C
LED module wattage	13.9 W
System wattage	17 W
Controllability	0-10V dimmable
Color rendering index	Ra > 80
Luminaire lumens	1659 lumens (3000K)
Lifetime at Ta = 15° C	>500,000 h (L70)
Lifetime at Ta = 50° C	101,000 h (L70)

LED color temperature

☐ 4000K - Product number + **K4**
○ 3500K - Product number + **K35**
○ 3000K - Product number + **K3**
○ 2700K - Product number + **K27**

BEGA can supply you with suitable LED replacement modules for up to 20 years after the purchase of LED luminaires - see website for details

Finish
All BEGA standard finishes are matte, textured polyester powder coat with minimum 3 mil thickness.

Available colors ☐ Black (BLK) ○ White (WHT) ○ RAL:
○ Bronze (BRZ) ○ Silver (SLV) ○ CUS:

Type:
BEGA Product:
Project:
Modified:





LED wall luminaire · shielded with forward throw

	LED	A	B	C
33817	13.9 W	5 1/8	9 1/8	5 3/8

BEGA 1000 BEGA Way, Carpinteria, CA 93013 (805) 684-0533 info@bega-us.com

Due to the dynamic nature of lighting products and the associated technologies, luminaire data on this sheet is subject to change at the discretion of BEGA North America. For the most current technical data, please refer to bega-us.com
© copyright BEGA 2018
Updated 09/10/18

LED recessed ceiling downlight - vortex reflector - narrow beam **BEGA**

Type:
BEGA Product:
Project:
Modified:

Application
LED recessed ceiling luminaire with symmetric narrow beam light distribution. The patent pending 'vortex reflector' rotates a parabolic reflector around the vertical axis to form a complex vortex shape. This vortex balances maximum efficiency with optimal glare control while eliminating shadows and artifacts in a uniquely sharp square distribution.

Materials
Luminaire housing and faceplate constructed of die-cast marine grade, copper free (≤ 0.3% copper content) A360.0 aluminum alloy
Clear safety glass
Reflector surface made of pure anodized aluminum
Silicone applied robotically to casting, plasma treated for increased adhesion
High temperature silicone gasket
Mechanically captive stainless steel fasteners
Stainless steel screw clamps
Galvanized steel rough in ceiling pan with through wiring box

NRTL listed to North American Standards, suitable for wet locations
Protection class IP 65
Weight: 1.8 lbs

Electrical

Operating voltage	120-277 V AC
Minimum start temperature	-20° C
LED module wattage	17.8 W
System wattage	22 W
Controllability	0-10V dimmable
Color rendering index	Ra > 85
Luminaire lumens	1295 lumens (3000K)
Lifetime at Ta = 15° C	172,000 h (L70)
Lifetime at Ta = 30° C	73,000 h (L70)

LED color temperature

○ 4000K - Product number + **K4**
○ 3500K - Product number + **K35**
○ 3000K - Product number + **K3**
○ 2700K - Product number + **K27**

BEGA can supply you with suitable LED replacement modules for up to 20 years after the purchase of LED luminaires - see website for details

Finish
All BEGA standard finishes are matte, textured polyester powder coat with minimum 3 mil thickness.

Available colors ○ Black (BLK) ○ White (WHT) ○ RAL:
○ Bronze (BRZ) ○ Silver (SLV) ○ CUS:



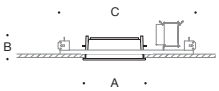

LED recessed ceiling downlight · vortex reflector · symmetric narrow beam

	LED	β	A	B	C
24 802	17.8 W	28°	6 ⅛	4 ½	20 ½

β = Beam angle

BEGA 1000 BEGA Way, Carpinteria, CA 93013 (805) 684-0533 info@bega-us.com

Due to the dynamic nature of lighting products and the associated technologies, luminaire data on this sheet is subject to change at the discretion of BEGA North America. For the most current technical data, please refer to bega-us.com
© copyright BEGA 2018
Updated 10/30/18

AL GRAZE AC™

ACCLAIM LIGHTING

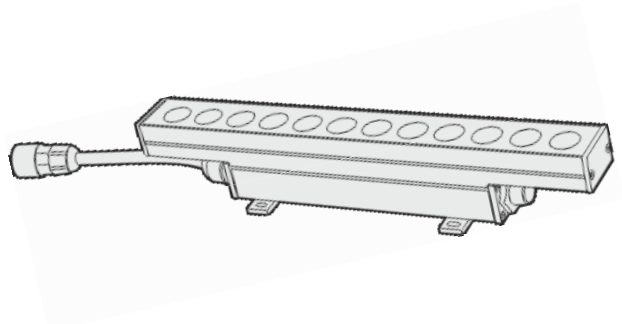

Client:	
Project:	
Type:	
Order Code:	
Quantity:	

The **AL Graze AC** is a high power, low profile, outdoor linear LED fixture.
Featuring a robust IP66 housing, on-board AC + DMX driver, and linkable cable system, it is the perfect option for any structure that calls for indoor or outdoor linear grazing.

SPECIFICATIONS

Color	2700K, 3000K, 3500K, 4000K, RGB, RGBW, RGBA, DW (2400K-5500K)
Beam Angle	10º x 60º, 30º x 60º, 10º x 10º, 60º x 60º, 20º Asymmetric Wall Wash
Max Fixtures In Series	50' @ 120V, 100' @ 230-277VAC
Total Lumens	419 per foot (4000K, 30º x 60º 1')
Control	DMX-512 (internal), 0-10V (via external UDM)
Mounting	30º Swivel Mount and Fixed Flat Mount Included
Power Consumption	9W per linear foot
Operating Voltage	100-277VAC
Lumen Maintenance	L70 @ 150,000 Hours (25º C)
Finish	Silver, Anodized Aluminum
Housing Material	Aluminum body; Glass Top Lens
Operating Temperature	-4°F to 123°F (-20°C to 50°C)
IP Rating	IP66, Wet or Dry Location
Fixture Connectors	Multipin IP66 Connectors, End to end jumpers attached to each fixture
Warranty	5 Years
Weight	**1'** - 1.25 lbs / 0.6 kg, **4'** - 5 lbs / 2.3 kg
Dimensions	See dimensions section on page 2 for options
Certifications	

AL GRAZE AC™

ACCLAIM LIGHTING

ORDER CODES

* Indicates Special Order

Model		Control	Housing Color	Glass Cover		Length	Beam	Color	Input voltage
AGH	-	2	4	1	-	#	#	#	N

Input Voltage:
N = Normal (100-277VAC)

Color:
A = 2700K
B = 3000K
D = 3500K
E = 4000K
H = RGB
L = RGBW *(W=6000K)*
Q = RGBW *(W=4000K)*
J = RGBA
M = DW *(2400K-5500K)*

Beam:
B = 10° x 10°*
K = 60° x 60°*
P = 10° x 60°
Q = 30° x 60°
S = 20°
Asymm.

Length:
A = 12"
D = 48"

Lens Cover:
1 = Clear

Housing Color:
4 =Finsihed Aluminum (silver)

Control:
2 = Internal DMX

DIMENSIONS

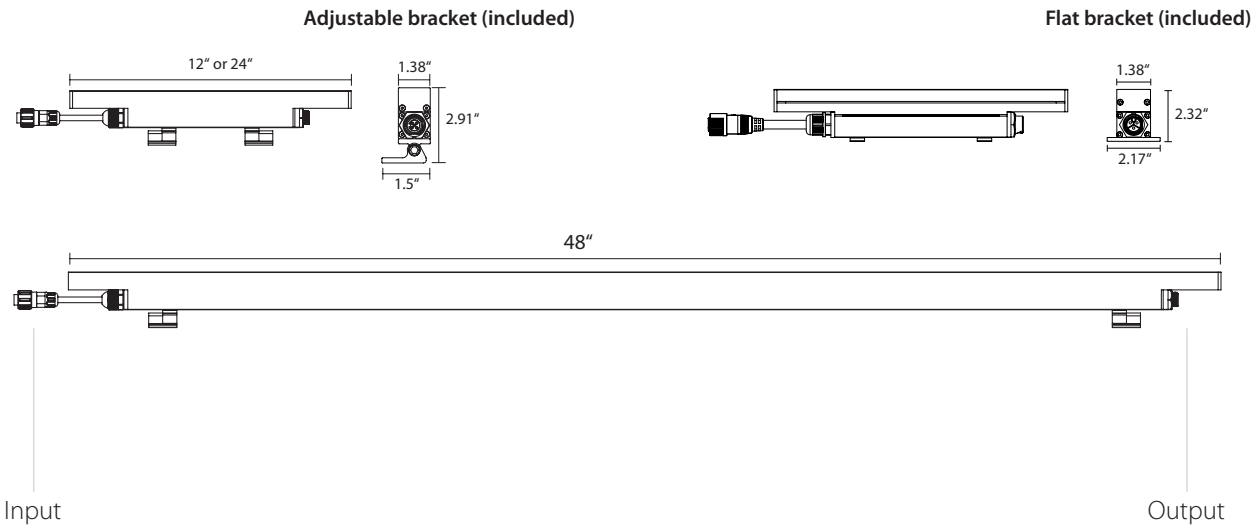

RELATED COMPONENTS

Connection Cables

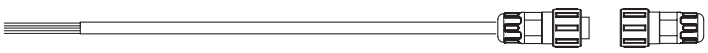

H6FC10
10' Feed Cable For AL Graze AC + End Cap
Powers up to 50'@ 120VAC

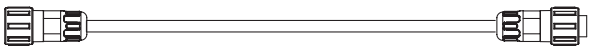

H6LC1
1' Link Cable for AL Graze AC

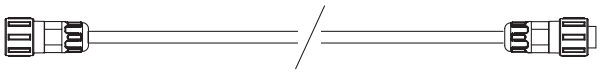

H6LC5
5' Link Cable for AL Graze AC

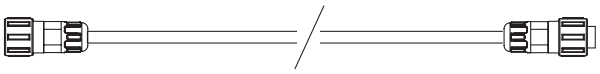

H6LC10
10' Link Cable for AL Graze AC



H6EC
End Cap for AL Graze AC

Mounting Accessories

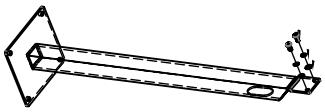

AGEB6
AL Graze Extender Bar 6"

AGEB12
AL Graze Extender Bar 12"

AGEB18
AL Graze Extender Bar 18"

AGEB24
AL Graze Extender Bar 24"

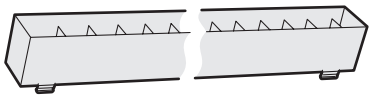

AGLV12
12" Louver for AL Graze AC

AGLV48
48" Louver for AL Graze AC

AG90MB
90 Degree Mounting Bracket for AL Graze AC



AGS1
12" Single Sided Glare Shield for AL Graze AC



AGS4
48" Single Sided Glare Shield for AL Graze AC

Fixture Setup Accessories

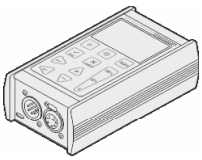

XMT350
DMX + RDM Addressing and Testing Tool

AL GRAZE AC™

ACCLAIM LIGHTING

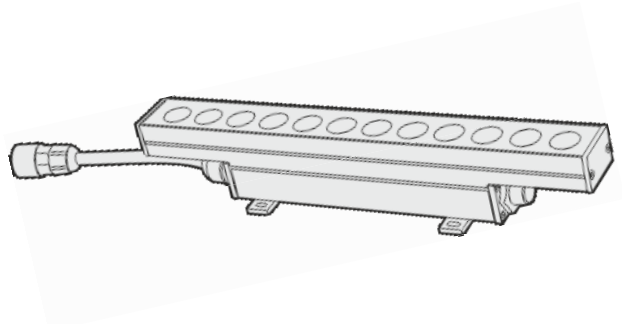

Client:	
Project:	
Type:	
Order Code:	
Quantity:	

The **AL Graze AC** is a high power, low profile, outdoor linear LED fixture.
Featuring a robust IP66 housing, on-board AC + DMX driver, and linkable cable system, it is the perfect option for any structure that calls for indoor or outdoor linear grazing.

SPECIFICATIONS

Color	2700K, 3000K, 3500K, 4000K, RGB, RGBW, RGBA, DW (2400K-5500K)
Beam Angle	10º x 60º, 30º x 60º, 10º x 10º, 60º x 60º, 20º Asymmetric Wall Wash
Max Fixtures In Series	50' @ 120V, 100' @ 230-277VAC
Total Lumens	419 per foot (4000K, 30º x 60º 1')
Control	DMX-512 (internal), 0-10V (via external UDM)
Mounting	30º Swivel Mount and Fixed Flat Mount Included
Power Consumption	9W per linear foot
Operating Voltage	100-277VAC
Lumen Maintenance	L70 @ 150,000 Hours (25º C)
Finish	Silver, Anodized Aluminum
Housing Material	Aluminum body; Glass Top Lens
Operating Temperature	-4°F to 123°F (-20°C to 50°C)
IP Rating	IP66, Wet or Dry Location
Fixture Connectors	Multipin IP66 Connectors, End to end jumpers attached to each fixture
Warranty	5 Years
Weight	**1'** - 1.25 lbs / 0.6 kg, **4'** - 5 lbs / 2.3 kg
Dimensions	See dimensions section on page 2 for options
Certifications	

AL GRAZE AC™

ACCLAIM LIGHTING

ORDER CODES

* Indicates Special Order

Model	Control	Housing Color	Glass Cover	Length	Beam	Color	Input voltage
AGH -	2	4	1 -	#	#	#	N

Control:
2 = Internal DMX

Housing Color:
4 =Finsihed Aluminum (silver)

Lens Cover:
1 = Clear

Length:
A = 12"
D = 48"

Beam:
B = 10° x 10°*
K = 60° x 60°*
P = 10° x 60°
Q = 30° x 60°
S = 20°
Asymm.

Color:
A = 2700K
B = 3000K
D = 3500K
E = 4000K
H = RGB
L = RGBW *(W=6000K)*
Q = RGBW *(W=4000K)*
J = RGBA
M = DW *(2400K-5500K)*

Input Voltage:
N = Normal (100-277VAC)

DIMENSIONS

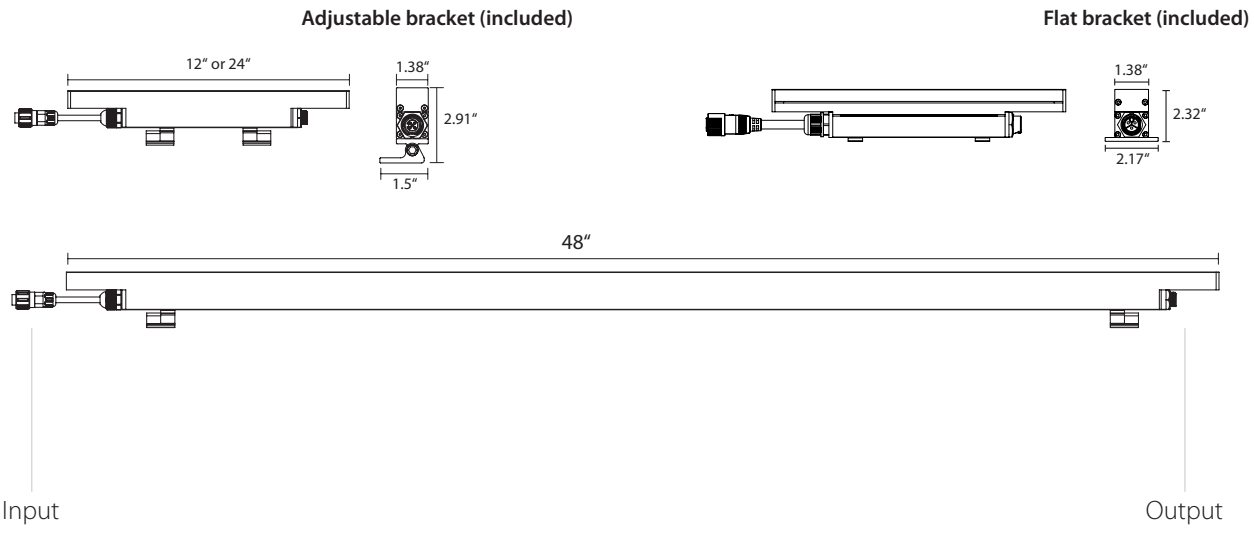

RELATED COMPONENTS

Connection Cables

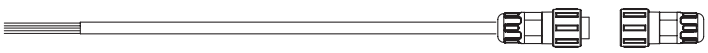

H6FC10
10' Feed Cable For AL Graze AC + End Cap
Powers up to 50'@ 120VAC

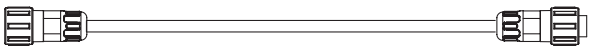

H6LC1
1' Link Cable for AL Graze AC

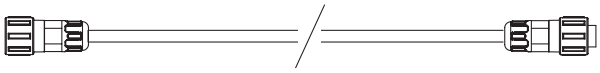

H6LC5
5' Link Cable for AL Graze AC

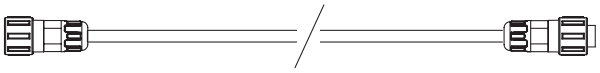

H6LC10
10' Link Cable for AL Graze AC



H6EC
End Cap for AL Graze AC

Mounting Accessories

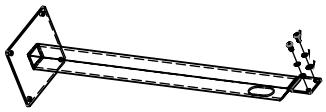

AGEB6
AL Graze Extender Bar 6"

AGEB12
AL Graze Extender Bar 12"
Type G3

AGEB18
AL Graze Extender Bar 18"

AGEB24
AL Graze Extender Bar 24"

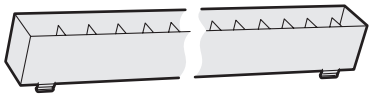

AGLV12
12" Louver for AL Graze AC

AGLV48
48" Louver for AL Graze AC
Type G3

AG90MB
90 Degree Mounting Bracket for AL Graze AC



AGS1
12" Single Sided Glare Shield for AL Graze AC



AGS4
48" Single Sided Glare Shield for AL Graze AC

Fixture Setup Accessories

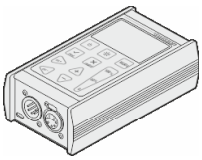

XMT350
DMX + RDM Addressing and Testing Tool

PROSOCO®

Sure Klean®

CLEANING & PROTECTIVE TREATMENTS

Restoration Cleaner

Sure Klean® Restoration Cleaner is a concentrated compound formulated as a carbon solubilizer. Used properly, it cleans brick, granite, sandstone, terra cotta, many exposed aggregate surfaces and other masonry except limestone, marble or concrete. This product has been safely and effectively used to clean historic structures throughout the United States and Canada.

When properly used, Sure Klean® Restoration Cleaner is safer and less expensive than sandblasting or steam cleaning. Application to masonry surfaces loosens and dissolves dirt, paint oxidation, carbon buildup and other atmospheric pollutants. A simple cold-water rinse removes unsightly stains.

ADVANTAGES

- **Proven effective for cleaning dirty and heavily carboned buildings.**
- **Safer than sandblasting. Will not pit or damage the masonry when properly applied.**

Limitations

- May etch window glass.
- Not suitable for cleaning of limestone, concrete or marble surfaces. See Sure Klean® Limestone Restorer or Sure Klean® 766 Limestone & Masonry Prewash literature for these applications.
- Not recommended for interior use. Contact PROSOCO's Customer Care (800-255-4255) for recommendations for the most appropriate Sure Klean® or Enviro Klean® interior cleaning system.

REGULATORY COMPLIANCE

VOC Compliance

Sure Klean® Restoration Cleaner is compliant with all national, state and district VOC regulations.

TYPICAL TECHNICAL DATA

FORM	Clear, colorless liquid
SPECIFIC GRAVITY	1.050
pH	2.2 @ 1:3 dilution
WT/GAL	8.75 lbs
ACTIVE CONTENT	not applicable
TOTAL SOLIDS	not applicable
VOC CONTENT	not applicable
FLASH POINT	not applicable
FREEZE POINT	no data
SHELF LIFE	3 years in tightly sealed, unopened container

SAFETY INFORMATION

Always read full label and SDS for precautionary instructions before use. Use appropriate safety equipment and job site controls during application and handling.

24-Hour Emergency Information:
INFOTRAC at 800-535-5053

PREPARATION

Protect people, vehicles, property, plants, metal, and all non masonry and acid-sensitive surfaces from contact with cleaner, rinse residue, fumes and wind drift. Protect/divert auto and foot traffic. Clean when traffic is at a minimum.

Maintain sufficient ventilation to avoid buildup of potentially damaging fumes. Avoid exposing building occupants to fumes. On occupied buildings, cover all windows, air intakes and exterior air conditioning vents. Shut down air handling equipment during cleaning and until surfaces are thoroughly dry. Fumes attack glass, metal and all other acid-sensitive surfaces.

Clean masonry before installing windows, doors, finished flooring, metal fixtures, hardware, light fixtures, roofing materials and other non masonry items. If already installed, protect with Sure Klean® Strippable Masking or polyethylene before application.

Recommended for these substrates. Always test. Coverage is in sq.ft./m. per gallon of concentrate.

Substrate	*Type*	*Use?*	*Coverage*
Architectural Concrete Block	Burnished Smooth Split-faced Ribbed	no no no no	N/A
Concrete	Brick Tile Precast Panels Pavers Cast-in-place	no no no no no	N/A
Fired Clay	Brick Tile Terra Cotta Pavers	**yes** **yes** **yes** **yes**	125–400 sq.ft. 12–37 sq.m.
Marble, Travertine, Limestone	Polished	no	N/A
	Unpolished	no	N/A
Granite	Polished	no	N/A
	Unpolished	**yes**	200–500 sq.ft. 19–47 sq.m.
Sandstone	Unpolished	**yes**	125–400 sq.ft. 12–37 sq.m.
Slate	Unpolished	**yes**	200–500 sq.ft. 19–47 sq.m.

Always test to ensure desired results. Coverage estimates depend on surface texture and porosity.

All caulking and sealant materials should be in place and thoroughly cured before cleaning.

Restoration Cleaner is corrosive, etches glass and architectural aluminum and is harmful to wood, painted surfaces and foliage. Inspect glazed terra cotta and tile carefully. Where glaze has been partially weathered away or etched, cleaning may cause additional loss of glaze.

Surface and Air Temperatures

Best cleaning temperatures are 40° F (4° C) or above for air and masonry. Cleaning when temperatures are below freezing or will be overnight may harm masonry. If freezing conditions have existed, let the masonry thaw before cleaning.

Equipment

Apply using low pressure (50 psi max) spray, roller or densely filled (tampico) masonry washing brush. Do not apply with high pressure spray. This drives the chemicals deep into the surface, making rinse difficult. Discoloration may result.

Rinse with enough water and pressure to flush spent cleaner and dissolved soiling from the masonry surface and surface pores without damage. Inadequate rinsing leaves residues which may stain the cleaned surface.

Masonry-washing equipment generating 400–1000 psi with a water flow rate of 6–8 gallons per minute is the best water/pressure combination for rinsing porous masonry. Use a 15–45° fan spray tip. Heated water (150–180° F; 65–82° C) may improve cleaning efficiency. Use adjustable equipment for reducing water flow-rates and rinsing pressure as needed for sensitive surfaces.

Rinsing pressures greater than 1000 psi and fan spray tips smaller than 15° may permanently damage sensitive masonry. Water flow-rates less than 6 gallons per minute may reduce cleaning productivity and contribute to uneven cleaning results.

Storage and Handling

Store in a cool, dry place with adequate ventilation. Always seal container after dispensing. Do not alter or mix with other chemicals. Published shelf life assumes upright storage of factory-sealed containers in a dry place. Maintain temperature of 45–100° F (7–38° C). Do not double stack pallets. Dispose of unused product and container in accordance with local, state and federal regulations.

APPLICATION

Read "Preparation" and the Safety Data Sheet before use.

ALWAYS TEST a small area of each surface to confirm suitability and desired results before beginning overall application. Test each type of masonry and each type of stain. Test with the same equipment, recommended surface preparation and application procedures planned for general application. Let test area dry 3–7 days before inspection and approval. Make the test panel available for comparison throughout the cleaning project.

Dilution

Always pour water into empty bucket first, then carefully add concentrate. Handle in polypropylene or polyethylene buckets only. Acidic liquids and fumes attack metal.

Porous Masonry: Use concentrate during initial testing. If concentrate cleans effectively, run tests with diluted solutions of up to 3 parts water to 1 part concentrate. Use the mildest effective solution based on test results.

Nonporous Masonry (glazed brick & terra cotta): Dilute with 1 to 3 parts water to 1 part product concentrate, depending on test results. Sure Klean® Restoration Cleaner is an acidic product and may etch polished and glazed surfaces. Etching can be controlled by dilution.

Application Instructions

1. After protecting all non masonry surfaces, thoroughly prewet the area to be cleaned with fresh water, working from the bottom to the top.
2. Apply the cleaning solution liberally.
3. Leave the cleaning solution on the surface for 3–5 minutes. Reapply. Light scrubbing improves cleaning results especially if high-pressure rinsing equipment isn't available. Keep people away from treated surfaces. Do not let the cleaning solution "dry in" to the masonry – bleaching may occur.
4. Water rinse with low-pressure, flood rinse to remove initial acidic residue with minimum risk of wind drift. Then rinse the treated area thoroughly with high-pressure spray. Rinse from the bottom to the top. Flush each section of the surface with a concentrated stream of water. Keep the wall below wet and rinsed free of cleaner and residues to avoid streaks.

On severely stained horizontal surfaces under window sills, eaves, etc., pretreating with Sure Klean® 766 Limestone & Masonry Prewash may prove effective. Read and follow product procedures and recommendations. Pressure rinse, then "afterwash" with Sure Klean® Restoration Cleaner followed by water rinse.

Cleanup

Clean tools and equipment using fresh water.

Maintenance

A breathable water repellent makes the cleaned surface less likely to stain and keeps the surface clean longer. It also makes future cleaning operations faster and easier. For more information about water repellents for masonry, contact PROSOCO's Customer Care (800-255-4255) regarding Sure Klean® Weather Seal products.

BEST PRACTICES

Restoration Cleaner is corrosive, etches glass and architectural aluminum and is harmful to wood, painted surfaces and foliage. Inspect glazed terra cotta and tile carefully. Where glaze has been partially weathered away or etched, cleaning may cause additional loss of glaze.

On severely stained horizontal surfaces, under window sills, eaves, etc., pretreatment with Sure Klean® 766 Limestone & Masonry Prewash may prove effective. Read and follow product procedures and recommendations.

When diluting, always pour water into empty bucket first, then carefully add product concentrate. Use the mildest effective solution based on test results.

Apply using low pressure spray, 50 psi maximum. Do not apply with high pressure spray. This drives the chemicals deep into the surface, making rinse difficult. Discoloration may result.

A breathable water repellent makes the cleaned surface less likely to stain and keeps the surface clean longer. For more information about water repellents for masonry, contact PROSOCO's Customer Care at 800-255-4255.

Never go it alone. For problems or questions, contact your local PROSOCO distributor or field representative. Or call PROSOCO technical Customer Care toll-free at 800-255-4255.

WARRANTY

The information and recommendations made are based on our own research and the research of others, and are believed to be accurate. However, no guarantee of their accuracy is made because we cannot cover every possible application of our products, nor anticipate every variation encountered in masonry surfaces, job conditions and methods used. The purchasers shall make their own tests to determine the suitability of such products for a particular purpose.

PROSOCO, Inc. warrants this product to be free from defects. **Where permitted by law, PROSOCO makes no other warranties with respect to this product, express or implied, including without limitation the implied warranties of merchantability or fitness for particular purpose**. The purchaser shall be responsible to make his own tests to determine the suitability of this product for his particular purpose. PROSOCO's liability shall be limited in all events to supplying sufficient product to re-treat the specific areas to which defective product has been applied. Acceptance and use of this product absolves PROSOCO from any other liability, from whatever source, including liability for incidental, consequential or resultant damages whether due to breach of warranty, negligence or strict liability. This warranty may not be modified or extended by representatives of PROSOCO, its distributors or dealers.

CUSTOMER CARE

Factory personnel are available for product, environment and job-safety assistance with no obligation. Call 800-255-4255 and ask for Customer Care – technical support.

Factory-trained representatives are established in principal cities throughout the continental United States. Call Customer Care at 800-255-4255, or visit our web site at www.prosoco.com, for the name of the PROSOCO representative in your area.

Sure Klean® Restoration Cleaner Cleaning Specification

Specifier Note: The information provided below is intended to guide the Architect in developing specifications for products manufactured by PROSOCO, Inc. and should not be viewed as a complete source of information about the product(s). The Architect should always refer to the Product Data Sheet and MSDS for additional recommendations and for safety information

Specifier Note: Paragraph below is for PART 1 GENERAL, Quality Assurance.

Test Area
Test a minimum 4 ft. by 4 ft. area on each type of masonry. Use manufacturer's application instructions. Let the test panel dry 3 to 7 days before inspection. Keep test panels available for comparison throughout the cleaning project.

Specifier Note: Paragraphs below are for PART 2 PRODUCTS, Manufacturers and Products.

Manufacturer: PROSOCO, Inc., 3741 Greenway Circle, Lawrence, KS 66046. Phone: (800) 255-4255; Fax: (785) 830-9797. E-mail: CustomerCare@prosoco.com

Product Description
Sure Klean® Restoration Cleaner is a concentrated compound formulated as a "carbon solubilizer." Used properly, it cleans brick, granite, sandstone, terra cotta, many exposed aggregate surfaces and other masonry except limestone, marble or concrete.

Restoration Cleaner, when properly used, is safer and less expensive than sandblasting or steam cleaning. Application to masonry surfaces loosens and dissolves dirt, paint oxidation, carbon buildup and other atmospheric pollutants. A simple cold-water rinse then removes these unsightly stains.

Technical Data
FORM: Clear liquid
SPECIFIC GRAVITY: 1.050
pH: 2.2 (@ 1:3 dilution)
WT./GAL.: 8.75 lbs.
FLASH POINT: N/A
FREEZE POINT: N/D

Limitations
- Not suitable for cleaning of limestone, concrete or marble surfaces. See Sure Klean® Limestone Restorer or Sure Klean® 766 Limestone & Masonry Prewash/Afterwash literature for these applications.
- Not recommended for interior use. Contact PROSOCO's Customer Care (800-255-4255) for recommendations for the most appropriate Sure Klean® interior cleaning system.
- May etch window glass.

Specifier Note: Paragraphs below are for PART 3 EXECUTION, Installation.

Application
Before applying, read "Preparation" and "Safety Information" sections in the Manufacturer's Product Data Sheet for Restoration Cleaner. Use Restoration Cleaner in concentrate or dilute with 1-3 parts water. Refer to Product Data Sheet for recommended dilution for intended use.

1. After protecting all nonmasonry surfaces, thoroughly prewet the area to be cleaned with fresh water.

2. Apply the cleaning solution liberally using low-pressure spray (50 psi), roller or densely filled (tampico) masonry washing brush.
3. Leave the cleaning solution on the surface for 3-5 minutes. Reapply. Light scrubbing improves cleaning results especially if high-pressure rinsing equipment isn't available. Keep people away from treated surfaces.
4. Water rinse with low-pressure flood rinse to remove initial acidic residue with minimum risk of wind drift. Then rinse the treated area thoroughly with high-pressure spray. Rinse from the bottom to the top. Flush each section of the surface with a concentrated stream of water. Keep the wall below wet and rinsed free of cleaner and residues to avoid streaks. The best combination of rinsing pressure and water volume is provided by masonry washing equipment generating 400-1000 psi with a water flow rate of 6-8 gallons per minute delivered through a 15-45 degree fan spray tip. Equipment should be adjustable to reduce water flow rate and rinsing pressure as required for controlled cleaning of more sensitive surfaces. See also "Equipment" section of the Product Data Sheet

Note: Do not let the cleaning solution "dry in" to the masonry—bleaching may occur.


RELIABLE
SPRINKLER ALARM
Portland
Recycles


RELIABLE
SPRINKLER ALARM
AUTO SPKR



STAFF MEMORANDUM
HISTORIC PRESERVATION PROGRAM
PLANNING AND URBAN DEVELOPMENT

TO: Chair O'Brien and Members of the Historic Preservation Board
FROM: Rob Wiener, Historic Preservation Compliance Coordinator
DATE: September 1, 2023
RE: 73 Newbury Street (Abyssinian Meeting House) – Addition & Site Alterations (Second Workshop)
PROJECT ID: HPBR-002369-2023
MEETING: September 6, 2023

Owner: Committee to Restore the Abyssinian
Architect: CWS Architects
Engineer: Eric Dube, Trillium Engineering Group

A sign announcing the Historic Preservation Board's meeting on 9/1/2023 was posted at the property on 8/30/23. A legal ad was published in the Portland Press Herald on 8/25/23 and 8/26/23, and 34 notices were sent to neighboring property owners within 100 feet of the subject property.

PROJECT SCOPE

As part of the ongoing rehabilitation of the Abyssinian Meeting House so it can serve as an assembly hall and museum, plans call for reconfiguring the front and west side landscape to permit accessible entry to the front doors. Also proposed is an addition to the rear of the meeting hall that will include a second egress, an elevator, and restrooms; all are required to meet building and life safety codes that are quite stringent for an assembly space.

Dimensions – Rear Addition:

Overall Height: 33'-6" (Approximately)
Footprint: 13'-8" x 32'-6" (444 s.f.)

Material Specifications:

Foundation	Existing: Brick, added concrete at base Addition: concrete? – finish unknown
Siding	Existing; Wood clapboard, painted Addition: painted wood clapboard?
Trim	Existing: Painted wood Addition: painted wood?
Roofing	Existing: Asphalt shingle Addition:
Windows	Existing: Wood, multi-light Addition: multi-light, different pattern; material?
Doors	Existing: Wood Addition: material?

SUMMARY OF HISTORIC CONTEXT

Dating from 1828, the subject property is the third oldest Black Meeting House in the country; it is a local and state landmark and is on the National Register of Historic Places. Mr. Dube's cover letter provides a summary of the history and importance of the Meeting House and its past and future uses (see Attachment 1.) Built in a transitional Federal and Greek Revival style, the early appearance is documented only by a few 19th Century drawings. No photographs are known showing the Abyssinian prior to the 1920's. The church was active until 1916, and around 1920 (prior to 1924) the building was divided into multiple tenements; it then continued to decline into disrepair late in the 20th Century.

The block of Newbury Street between Hancock and Mountfort Streets is outside of the India Street Historic District. While most of the neighboring buildings on the north side of the block are historic and once housed a number of locally prominent Black families, they are much altered. On the south side of the block, a mixed-use / industrial site has been redeveloped with a large contemporary office building at the east end, and the Seadog Brewery continues to occupy the west end. In between are several smaller multi-unit residential buildings, both existing and planned.

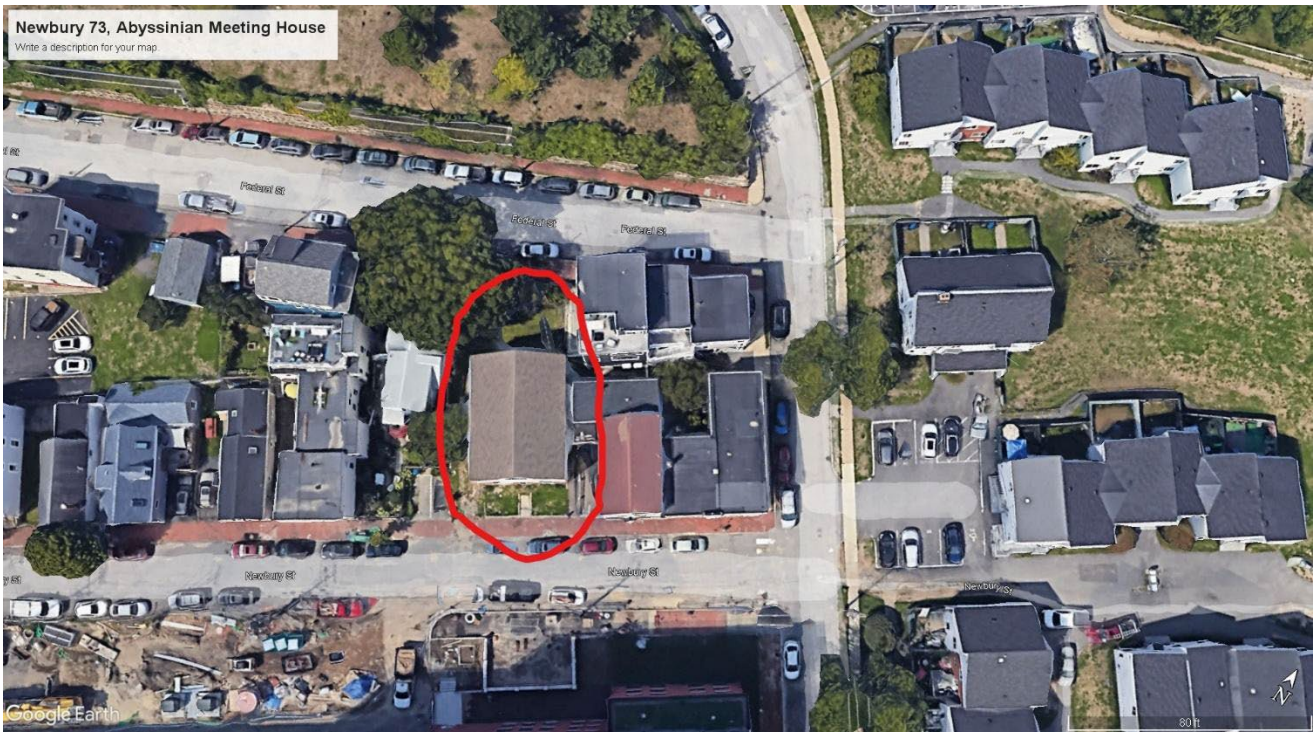

Figure 1: Google Satellite image of Portland showing location of the Abyssinian Meeting House At the top of the photo is the Eastern Cemetery; east of Mountfort Street is the Munjoy South housing complex. The entire area slopes toward the southeast (bottom of photo.)



Figure 2: Charles Goodhue drawing from 1900, showing the appearance of the Meeting House before the Civil War

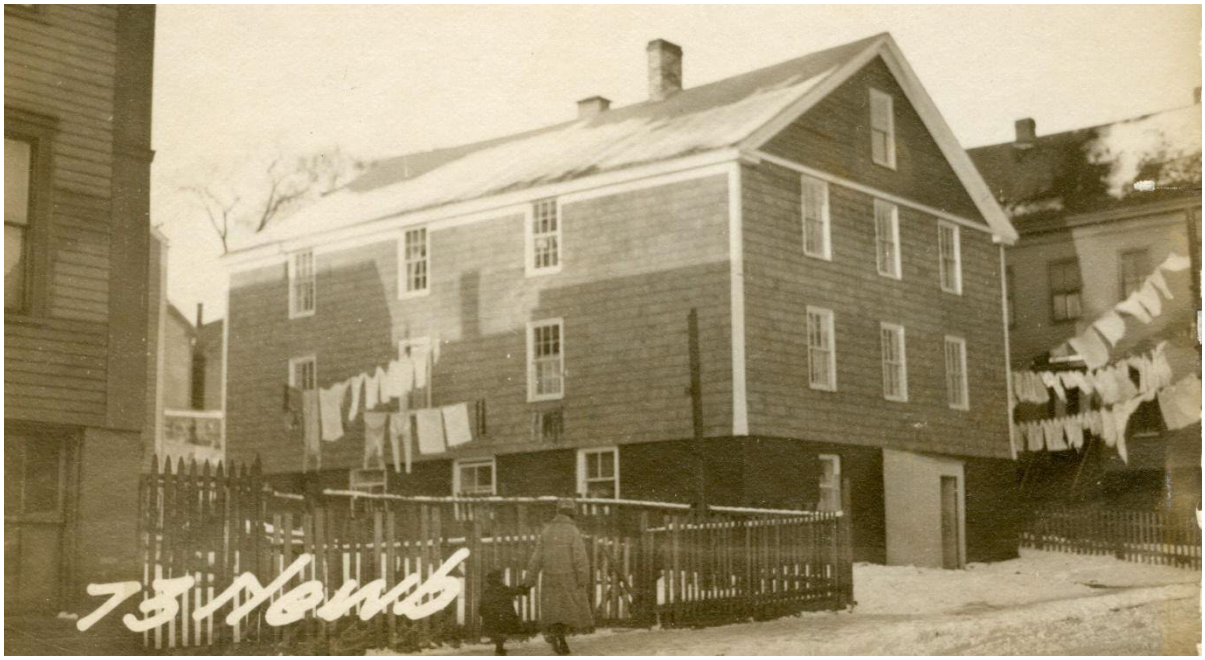

Figure 3: 1924 tax photo



Figure 4: Appearance in 2019, prior to masonry and door work on the ground floor



Figure 5: Existing Conditions, 2/16/2023



The back yard is sunken below Federal Street, with a retaining wall that will (at a minimum) need some repairs. Some storm water management measures will probably be needed, and an old wood stockade fence along the Federal Street sidewalk is to be replaced, possibly by a metal fence.

Figure 6: Existing Conditions (rear,) 2/16/2023

PREVIOUS REVIEW BY HISTORIC PRESERVATION BOARD

Historic Preservation staff have had a number of discussions with the design team and code reviewers during the last several years regarding the next stages of the restoration and adaptation, but the process began before 2009 with staff review of interior demolition of the early 20th Century tenement alterations. In 2009 the Board reviewed the replacement of the roof system, based on careful study of available documentation, including building design books from the early 1800's.

In the last decade additional work was reviewed by staff, including gutting and reconstruction of interior floors and stairs, and reconstruction of windows and doors. All work has also been and

will continue to be reviewed by the Maine Historic Preservation Commission; having provided several grants for the rehabilitation, the Commission holds a stewardship easement until 2071. If the total of disturbed areas on the site exceeds 1000 square feet, the project will likely need a minor site plan review by the Planning Department (a staff level review.)

A first workshop on the proposed improvements was held on March 1, 2023, with essentially the same scope as submitted for the upcoming September 6 workshop. Some changes to the design approach are noted, particularly in the location of the ramp that is to make the western front door accessible, changes to lighting, and some of the fenestration on the addition. Board members who could not attend the March 1 workshop are urged to review the recorded meeting in order to fully participate on September 6.

PROPOSED PROJECTS, 2023

- Add a paved ramp and stairs to access the front of building6; low curbs and plantings to retain and soften
- Improve storm water management on east and west sides and rear of building
- Add a walk and steps on southwest side, providing access to side and rear of the Meeting House
- Address the various walls at sides and rear of property – removal of concrete remnant at the rear of the west side; repair or replacement of walls at rear and rear of east side; possible creation of new retaining wall on SW; new fence at rear, along Federal Street
- Construct a two-floor rear addition (444 s.f. footprint) with stairs, elevator, rest rooms, and a door to the exterior

Workshop, March 1, 2023

At the first workshop on March 1, 2023, Board members were very supportive of the efforts of the Committee and their team to sensitively restore the meeting house, with the necessary updating to give it new life and uses in this era. Among the topics raised and discussed were:

- Review and construction timeframe: with substantial federal funding having been appropriated for part of the total cost of completing the full project, the applicants hope to start as soon as possible. Contractors have not yet been chosen.
- Board members discussed a desire to "minimize the impact of the front ramp and the grade changes on the site," in the words of one. This included questions about the height of granite retaining walls at the front, landscaping and grading treatments, railings, and stairs.
- Both the Board and the design team desire plantings that are low-in-height and low-maintenance, to soften the needed ramp and walls. (It was noted that the historic front landscape was low and informal.)
- It was suggested that perhaps lighting could be incorporated into site work, instead of attaching multiple fixtures to the building.
- In terms of materials, some Board members commented that the compatible materials for new work should perhaps also be subtly differentiated.
- Staff and some Board members suggested further exploration of the fenestration on the

west wall of the proposed addition, for a different balance of window-to-wall. Mr. Turk the architect mentioned that it was hoped that generous amounts of windows would visually lighten the addition.

- The applicants were asked about programming of the back yard of the Meeting House lot, but no details are available yet. Envisioned is a small, informal, contemplative garden; the addition will reduce the amount of useable area. There were also related mentions of a possible desire to improve security on the lot with one or more gates, if unsanctioned foot traffic becomes problematic; no proposals or details were discussed.

REVISED PROPOSAL, SEPTEMBER 6, 2023 WORKSHOP

Mr. Dube has provided the following list of the primary design changes made since the March, 2023 workshop. (Note also that the project architects have changed since the March workshop.)

1. We revised the ADA ramp design from the East side to the West side alleyway as requested by the client. This design also revised the access pathway to the proposed rear addition egress door and added a stairway to the rear yard.
2. We revised the building and pathway lighting as requested at our HP staff review meeting.
3. We revised the proposed addition rear and side windows as requested at our HP staff review meeting. We added in windows in the proposed bathrooms as requested.

STAFF COMMENTS

It is important that the Abyssinian Meeting House receive the upgrades necessary to not only restore its historic character, but also to safely open to the public for community gatherings and education. The Committee to Restore the Abyssinian and its consultants have invested many hours, as have staff at the City and Maine Historic Preservation Commission, to discuss proposals to add essential modern elements that are as sensitive to the historic identity of the resource as possible. Ultimately, proposed alterations must balance ensuring modern accessibility and safety standards are met, and the need to meet standards for historic preservation review.

The proposed rear addition design has not changed significantly since March of this year, except for the shortening of one of three windows on the west wall, making the three all the same height. Small rear windows were also added for the bathrooms, resulting is less blank wall on the rear face. Staff believes the Meeting House can accommodate a subtly differentiated, quietly compatible addition. Some additional details and discussion are warranted as details are finalized. Staff notes that Board input would be helpful on design details that are not fully defined:

- Windows depicted in the elevations of the addition have clearly differentiated configurations, which staff supports; detailed specifications can be reviewed when plans are more fully developed.
- The west wall of the addition is proposed with three double-hung windows that are all the same size.
- Siding on the addition appears the same as on the Meeting House – apparently wood clapboards.
- It is not clear if the trim package on the addition is proposed to mimic the Meeting House, or be subtly different. Staff suggests avoiding exact replication of the existing building trim.

- It is not yet clear how the surface of the exposed foundation of the addition will be treated.
- Staff agrees with the move to meet lighting needs for paths, ramps, and stairs by incorporating illumination into landscape features, rather than adding multiple fixtures to the building walls.
- Doors will likely require lighting fixtures, possibly building-mounted. Staff suggests that the Board discuss what type and character of fixtures would be most appropriate

Most notable of the changes made for the September 6 submission is the location of the ramp for accessibility on the west side of the meeting house, instead of the front. The design team has created a side ramp with a switchback leading to the western front door. This allows one front door to be accessible, and the space between the stairs can contain sloping landscape with low plantings. The 8" thick granite curb will be 4" higher than landings and stairs, following the slope of the stairs down toward the sidewalk.

Staff endorses the proposed compromise of moving the ramp to the side while ensuring that a front entrance is accessible. Given the uses and vision for the building, adding welcoming accessibility at the front is important; the topography that slopes from east to west in front, and slopes up towards the rear of the building along the sides makes this a design challenge.

The proposed path up the west side leads to an entrance into the rear addition, and stairs up to the small back yard. A presumably original side door on the west side of the meeting house is to be maintained, though not directly accessed by a path, because of the constraints posed by walkway and ramp needs, combined with grade changes.

Given the historically simple, low, and informal front landscape, the desire to keep the front interventions as low and informal in character is somewhat challenging with the need for access. Railings may warrant further discussion; it is hoped that they will only be included where necessary. Some examples of railings are included with the submission package.

Landscape architect Tony Cowles has pointed out that small grassy areas similar to the existing and past appearance would be difficult to maintain and keep green. At the March 1 workshop the character of the plantings was discussed as being low and informal, more similar to ground cover than to foundation plantings.

ANALYSIS OF APPLICABLE REVIEW STANDARDS

Standards for Review of Alterations, 17.8.2:

Standard 1
Every reasonable effort shall be made to provide a compatible use for a property which requires minimal alteration to the character defining features of the structure, object, or site and its environment or to use a property for its originally intended purpose.

Standard Met?	Staff Comments
Yes; worthy of Board discussion	The proposed uses for the building are compatible and appropriate; the challenge is to make the uses possible while making minimal changes to the character of the site and building. Adding accessibility to the front door with a side ramp may well be the best of the available options, despite changing the character of the approach and the appearance of the front.

Standard 2	
The distinguishing original qualities or character of a structure, object, or site and its environment shall not be destroyed. The removal or alteration of any historic material or distinctive architectural features should be avoided when possible.	
Standard Met?	Staff Comments
Yes	Plans appear to maintain the integrity of historic openings, stone thresholds, and other masonry. The rear face of the original building is quite plain, and the addition adds a simple geometric form while obscuring little of significance.

Standard 3	
All sites, structures, and objects shall be recognized as products of their own time, place, and use. Alterations that have no historical basis or create a false sense of historical development, such as adding conjectural features or elements from other properties, shall be discouraged.	
Standard Met?	Staff Comments
Yes; deserves more discussion	Proposed site changes and rear addition should be recognizable as modern necessities added to enhance compatible use of the historic resource. Rear addition demands quiet compatibility with subtle differentiation.

Standard 4	
Changes which may have taken place in the course of time are evidence of the history and development of a structure, object, or site and its environment. Changes that have acquired significance in their own right shall not be destroyed.	
Standard Met?	Staff Comments
Yes	

Standard 5	
Distinctive features, finishes, and construction techniques or examples of skilled craftsmanship which characterize a structure, object, or site shall be treated with sensitivity.	
Standard Met?	Staff Comments
Yes	

Standard 6
Deteriorated historic features shall be repaired rather than replaced wherever feasible. Where the severity of deterioration requires replacement of a distinctive feature, the new feature

should match the feature being replaced in composition, design, texture, and other visual qualities and, where possible, materials. Repair or replacement of missing historic features should be based on accurate duplications of features, substantiated by documentary, physical, or pictorial evidence rather than on conjectural designs or the availability of different architectural elements from other structures or objects.	
Standard Met?	Staff Comments
Yes	Previously reviewed and completed exterior work has been extensively reviewed and carefully executed.

Standard 7	
The surface cleaning of structures and objects, if appropriate, shall be undertaken with the gentlest means possible. Chemical or physical treatments, such as sandblasting, that cause damage to historic materials shall not be undertaken.	
Standard Met?	Staff Comments
Yes; possible condition	If additional masonry work or cleaning is necessary, methods and materials must be reviewed by staff.

Standard 8	
Every reasonable effort shall be made to protect and preserve significant archaeological resources affected by or adjacent to any project. If resources must be disturbed, mitigation measures shall be undertaken.	
Standard Met?	Staff Comments
Yes; possible condition	Before any disturbance occurs for sitework or the addition, a plan must be in place to survey and safeguard any possible archeological resources in the work area.

Standard 9	
Contemporary design for alterations and additions to existing properties shall not be discouraged when such alterations and additions do not destroy significant cultural, historical, architectural, or archaeological materials that characterize the property. The new work shall be differentiated from the old and shall be compatible with the size, scale, color, material, and character of the property, neighborhood or environment.	
Standard Met?	Staff Comments
Yes	The addition and site alterations will need to be recognizable as a product of the present time, while maintaining compatibility.

Standard 10	
Wherever possible, new additions or alterations to structures and objects shall be undertaken in such a manner that, if such additions or alterations were to be removed in the future, the essential form and integrity of the historic property would be unimpaired.	
Standard Met?	Staff Comments
Yes	Presumably both the addition and the front landscape alterations could be

	removed if necessary, without damaging the original structure.

Standards for Review of New Construction, 17.8.3:

Standard A. Scale and Form	
1. Height The proposed height shall be visually compatible with surrounding structures when viewed from any street or open space and in compliance with any design guidelines.	
Standard Met?	Staff Comments
Yes	Proposed addition appears to be a compatible form that is secondary in stature and no higher than necessary to achieve the program.
2. Width The width of a building shall be visually compatible with surrounding structures when viewed from any street or open space and in compliance with any design guidelines.	
Standard Met?	Staff Comments
Yes	Addition is slightly narrower than the rear wall of the Meeting House; the setbacks at the corners are desirable to maintain the original form. It is doubtful the needed program could be achieved if the addition were any smaller.
3. Proportion of principal facades The relationship of the width to the height of the principal elevations shall be visually compatible with structures, public ways, and open spaces to which it is visually related.	
Standard Met?	Staff Comments
Yes	
4. Roof shapes The roof shape of a structure shall be visually compatible with the structures to which it is visually related.	
Standard Met?	Staff Comments
Yes	
5. Scale of a structure The size and mass of structures in relation to open spaces, windows, door openings, porches, and balconies shall be visually compatible with the structures, public ways, and places to which they are visually related.	
Standard Met?	Staff Comments
Yes	

Standard B. Composition of Principle Facades
1. Proportion of openings

The relationship of the width to height of windows and doors shall be visually compatible with structures, public ways, and places to which the building is visually related.	
Standard Met?	Staff Comments
Yes	Addition windows are vertically proportioned
2. Rhythm of solids to voids in facades The relationship of solids to voids in the façade of a structure shall be visually compatible with structures, public ways, and places to which it is visually related.	
Standard Met?	Staff Comments
Yes	Staff has questioned the number of windows (3) on the west side of the proposed addition. Eliminating one would increase the amount of wall on the elevation, improving the ratio of solids to voids. Nonetheless, a different ratio of solids to walls might be seen as distinguishing the modern addition.
3. Rhythm of entrance porch and other projections The relationship of entrances and other projections to sidewalks shall be visually compatible with the structures, public ways, and places to which they are visually related.	
Standard Met?	Staff Comments
Yes, subject to Board discussion	Staff supports the location of the ramp on the side, with the front entrance accessible. Otherwise, if additional softening of the front landscape and walls is possible, it should be explored.
4. Relationship of materials The relationship of the color and texture of materials (other than paint color) of the facade shall be visually compatible with the predominant materials used in the structures to which they are visually related.	
Standard Met?	Staff Comments
Yes, subject to Board discussion	As more detailed plans are developed, attention must be paid to material choices that are compatible but differentiated where appropriate.
5. Signs Any new sign, and any change in the appearance of an existing sign located on a landmark, within a historic district, or within an historic landscape district, which is readily visible from any street or open space shall not be incongruous to the historic character of the landmark or district and shall comply with the criteria and guidelines specified in the Historic Resources Design Manual.	
Standard Met?	Staff Comments
TBD	Signage has not been discussed. Current banner must be temporary.

Standard C. Relationship to Street	
3. Directional expression of principal elevation A structure shall be visually compatible with the structures, public ways, and places to which it is visually related in its directional character, whether this be vertical character, horizontal character, or nondirectional character.	
Standard Met?	Staff Comments
Yes	Form of the proposed addition is visually related to the Meeting House.
4. Streetscape, pedestrian improvements Streetscape and pedestrian improvements and any change in the appearance thereof located adjacent to or on a landmark, within a historic district, or within a historic landscape district which is readily visible from any street or open space shall not be incongruous to the historic character of the landmark or district and shall comply with the criteria and guidelines specified in the Historic Resources Design Manual.	
Standard Met?	Staff Comments
Subject to Board discussion	Accessibility site improvements will change the relationship of the building's front face to the street and sidewalk. Interference with the appearance of the primary façade and relationship to street and sidewalk should be minimized.

Standard D. Other Standards	
2. Distinguishing original character The distinguishing original qualities or character of a structure, object, or site and its environment shall not be destroyed. The alteration of any historic material or distinctive architectural features should be avoided when possible.	
Standard Met?	Staff Comments
Yes – subject to Board discussion	The character of the original structure is being maintained, though the character of the site is proposed to be altered, with a less open and more formal, structured approach to the main entrance.

ATTACHMENTS

1. Cover letter
2. Architecture and site plans
3. Landscaping plan
4. Railing examples
5. Lighting examples
6. March 1, 2023 elevations
7. March 1, 2023 landscape plans



Trillium Engineering Group
189 Main Street
Yarmouth, Maine 04096

4 August, 2023

Evan Schueckler, Historic Preservation Program Manager
Robert O'Brien, Chair Historic Preservation Board
Portland City Hall, 4th Floor
Portland, ME 04101

RE: The Abyssinian Meeting House
73 Newbury Street
Chart, Block, Lot: 020 B005001

Dear Evan and Robert

On behalf of the Committee to Restore the Abyssinian (CRA) and Trillium Engineering Group, I am requesting an initial workshop to review proposed exterior alterations at the historic church. The Abyssinian Meeting House was built in 1828 by the Fourth Parish Congregation to serve the local black community as a church, school and meeting hall and is a local, statewide, and national landmark. This recognition is based upon the story the building communicates including religious, educational, and cultural activities of its congregants during the 19th century. The site is specifically associated with Abolitionist activity prior to and during the Civil War. Finally, the property is identified as significant as an undisturbed archaeological site.

The CRA purchased the property at auction in 1998 and has since been working on phased restoration to transition the building from a condemned tenement to a modern assembly occupancy. Work completed to date includes restoration of the building envelope to replicate its simple Federal style, 19th century appearance. The interior has also been gutted of its c. 1916 tenement configuration and new structural, plumbing and storm water mitigation has been introduced. All construction to date has been reviewed and approved by the Maine Historic Preservation Commission.

The CRA is presently planning a full build-out of the building and site to rehabilitate the property into a modern assembly hall and support spaces. The build-out will include a wood framed rear addition to house the required elevator and bathrooms for the facility. This effort requires balancing modern life safety, handicap access, mechanical, plumbing and electrical needs with historic preservation requirements. Ultimately, the site needs to express the cultural and architectural language of its period of significance and serve as a hub to tell the story of Portland's black community's past. The rehabilitated site will both tell this story to local, national, and world-wide visitors and will provide a venue for other community activities.

Sincerely,

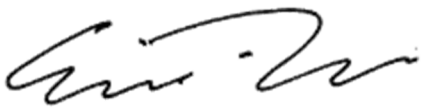

Eric Dube, PE
Trillium Engineering Group

HISTORIC PRESERVATION WORKSHOP



NEWBURY STREET



81/77

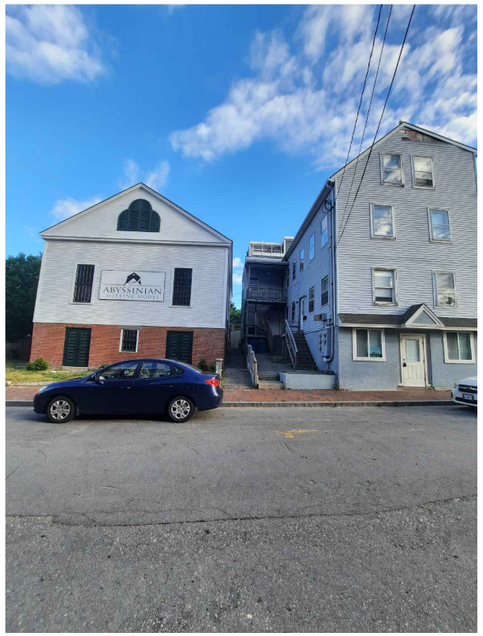

73/75 69

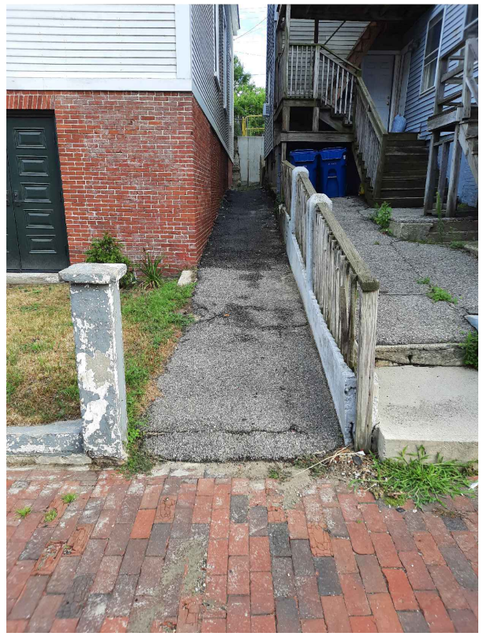

73/75 69

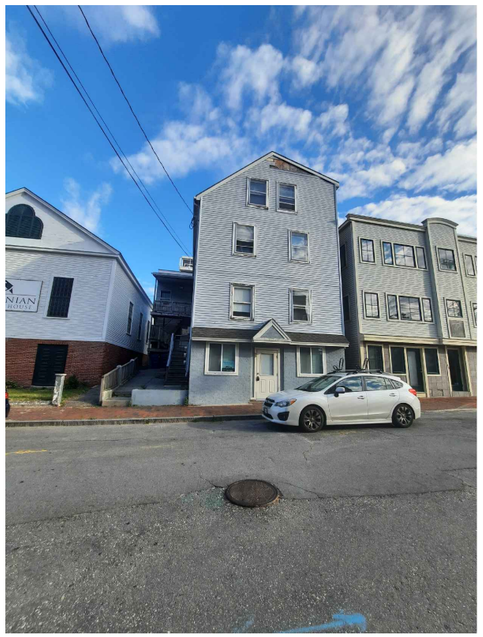

73/75 69 65

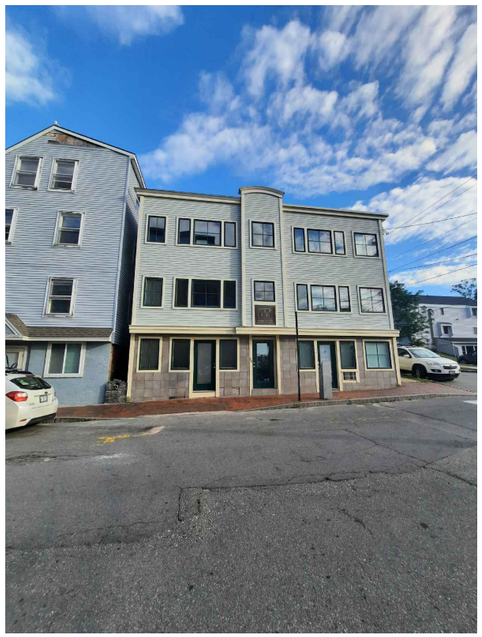

69 65

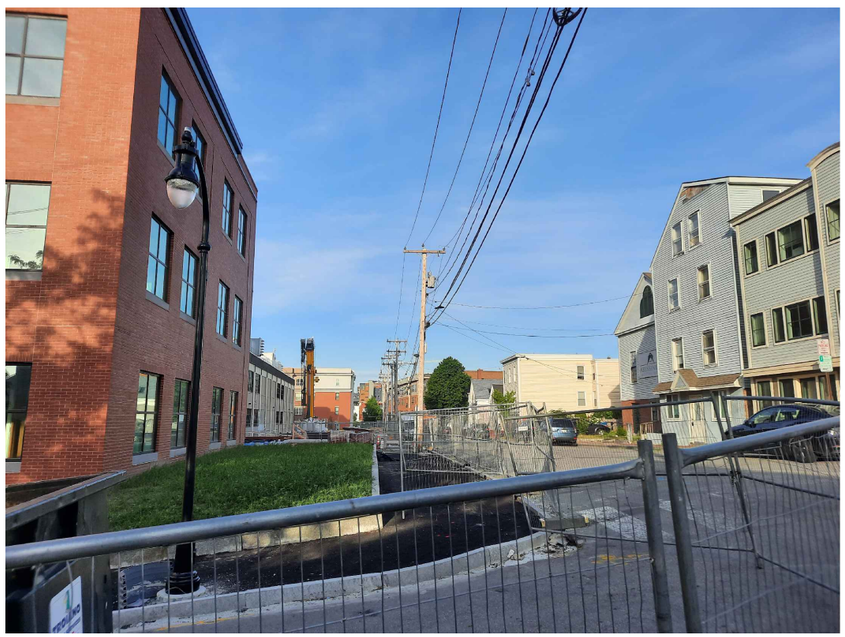

VIEW FROM MOUNTFORT LOOKING WEST

TRILLIUM ENGINEERING GROUP

TRILLIUM Engineering Group
Yarmouth, Maine 04096
www: trilliumengineeringgroup.com

CWS Architects
264 US-1 Unit 2A
Scarborough, ME 04074
www: turk-architecture.com

HISTORIC PRESERVATION
Application for Review of the
ABYSSINIAN MEETING HOUSE

OWNER:
Committee to Restore the
ABYSSINIAN MEETING HOUSE

WORKSHOP DATE:
JULY, 2023

PROJECT NO.:
21-067

EX-0

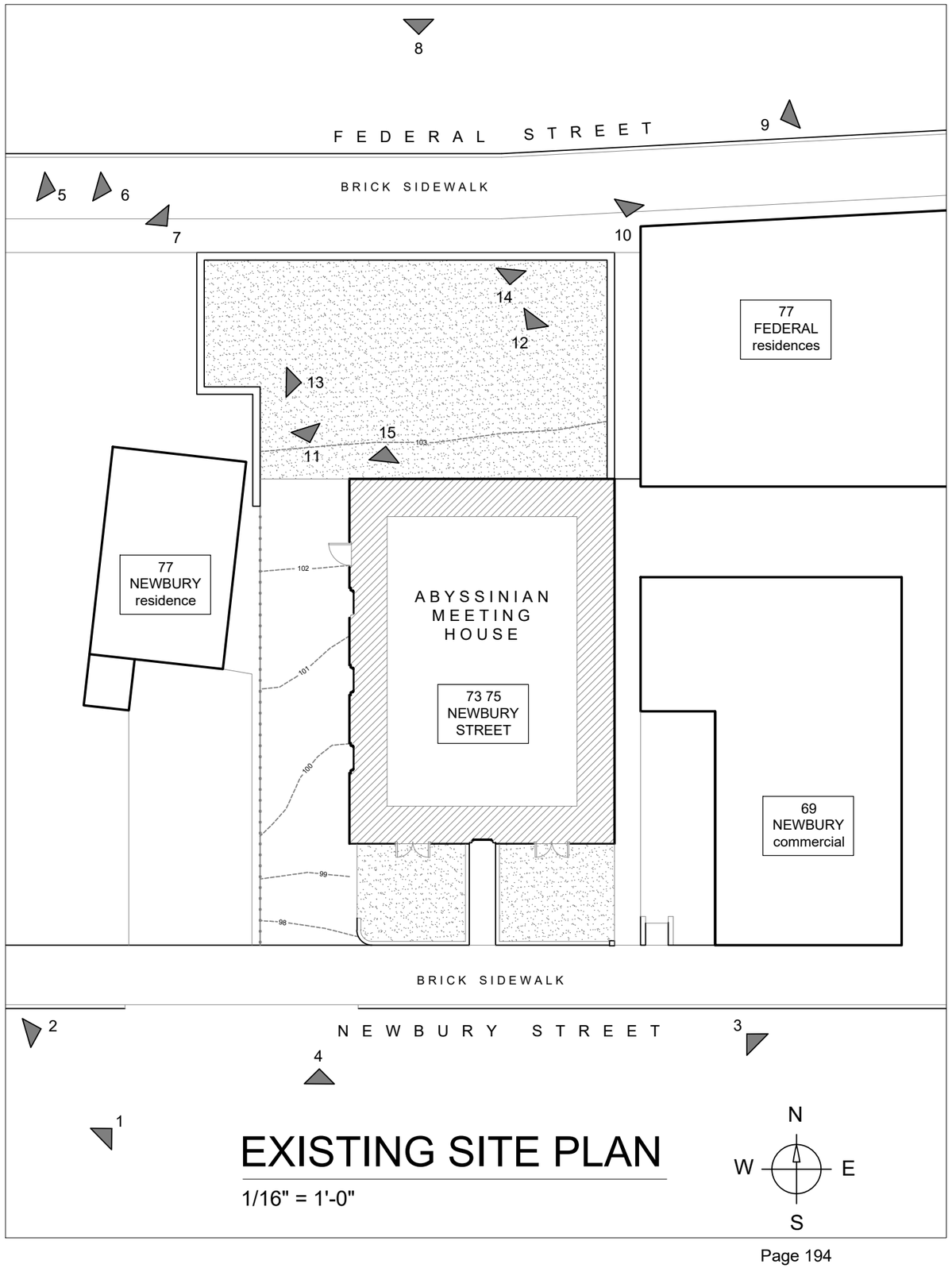

EXISTING SITE PLAN

1/16" = 1'-0"

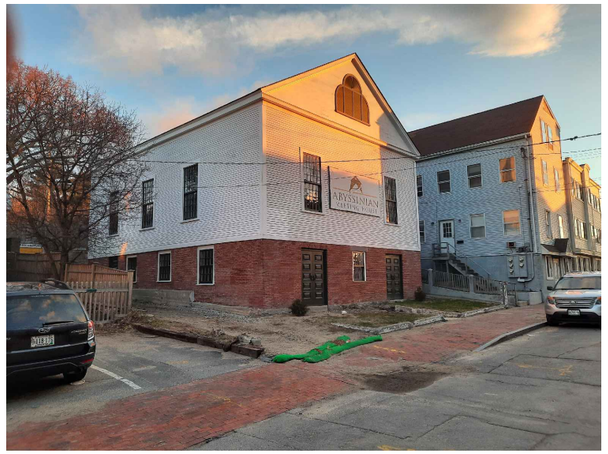

1. NEWBURY STREET



2. NEWBURY STREET



3. NEWBURY STREET

TRILLIUM
ENGINEERING GROUP

TRILLIUM
Engineering Group
Yarmouth, Maine 04096
www: trilliumengineeringgroup.com

CWS Architects
264 US-1 Unit 2A
Scarborough, ME 04074
www: turk-architecture.com

HISTORIC PRESERVATION
Application for Review of the
ABYSSINIAN MEETING HOUSE

OWNER:
Committee to Restore the
ABYSSINIAN MEETING HOUSE

WORKSHOP DATE:
JULY, 2023

PROJECT NO.:
21-067

EX-1



4. NEWBURY STREET

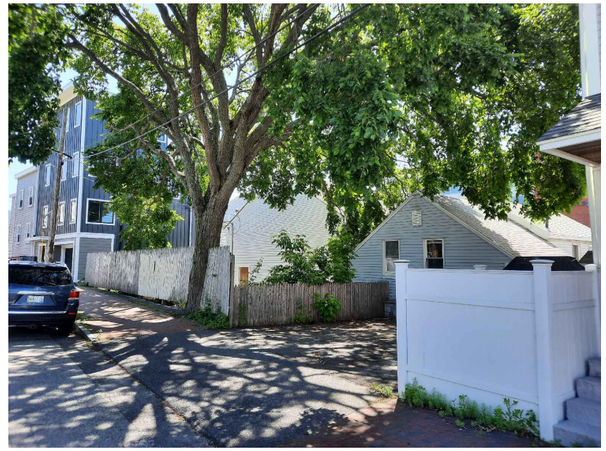

5. FEDERAL STREET

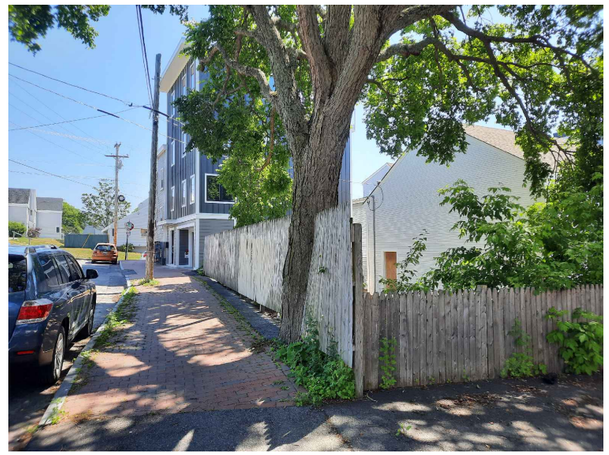

6. FEDERAL STREET

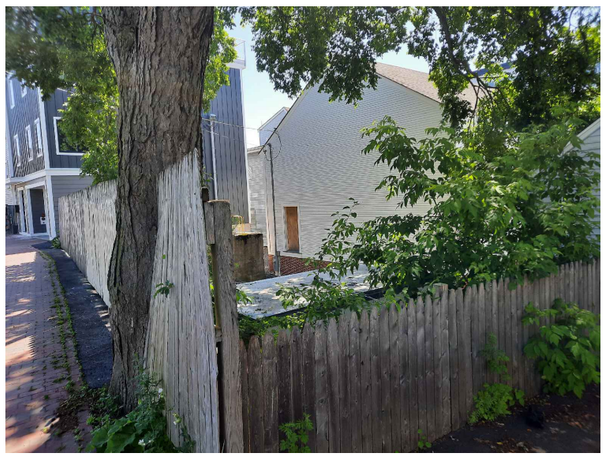

7. FEDERAL STREET



8. FEDERAL STREET



9. FEDERAL STREET

TRILLIUM
ENGINEERING GROUP

TRILLIUM
Engineering Group
Yarmouth, Maine 04096
www: trilliumengineeringgroup.com

CWS Architects
264 US-1 Unit 2A
Scarborough, ME 04074
www: turk-architecture.com

HISTORIC PRESERVATION
Application for Review of the
ABYSSINIAN MEETING HOUSE

OWNER:
Committee to Restore the
ABYSSINIAN MEETING HOUSE

WORKSHOP DATE:
JULY, 2023

PROJECT NO.:
21-067

EX-2



10. VIEW FROM FEDERAL STREET SIDEWALK



11. REAR VIEW Looking South



12. REAR VIEW Looking SW

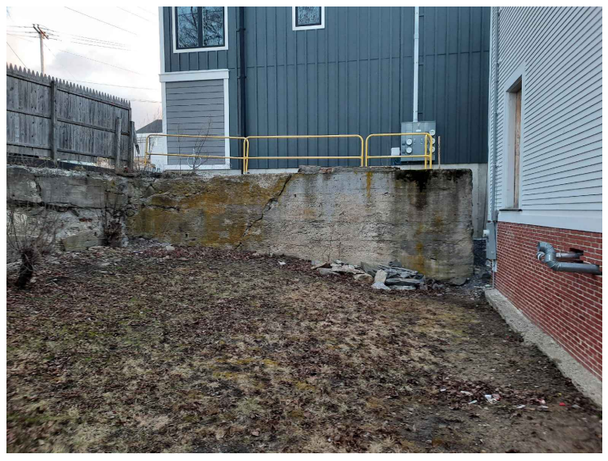

13. REAR VIEW Looking West

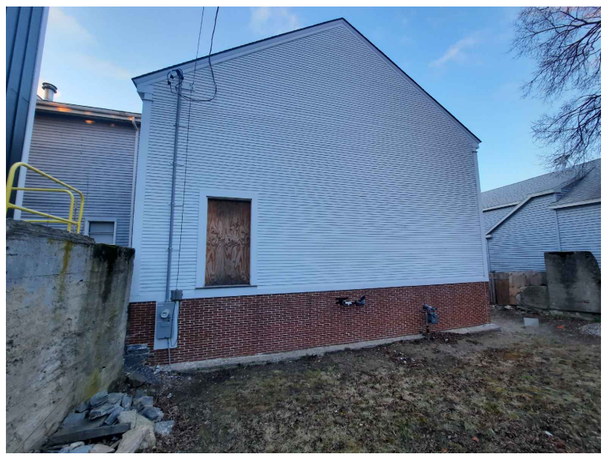

14. REAR VIEW Looking SW



15. REAR VIEW Looking North

TRILLIUM ENGINEERING GROUP

TRILLIUM Engineering Group
Yarmouth, Maine 04096
www: trilliumengineeringgroup.com

CWS Architects
264 US-1 Unit 2A
Scarborough, ME 04074
www: turk-architecture.com

HISTORIC PRESERVATION
Application for Review of the
ABYSSINIAN MEETING HOUSE

OWNER:
Committee to Restore the
ABYSSINIAN MEETING HOUSE

WORKSHOP DATE:
JULY, 2023

PROJECT NO.:
21-067

EX-3

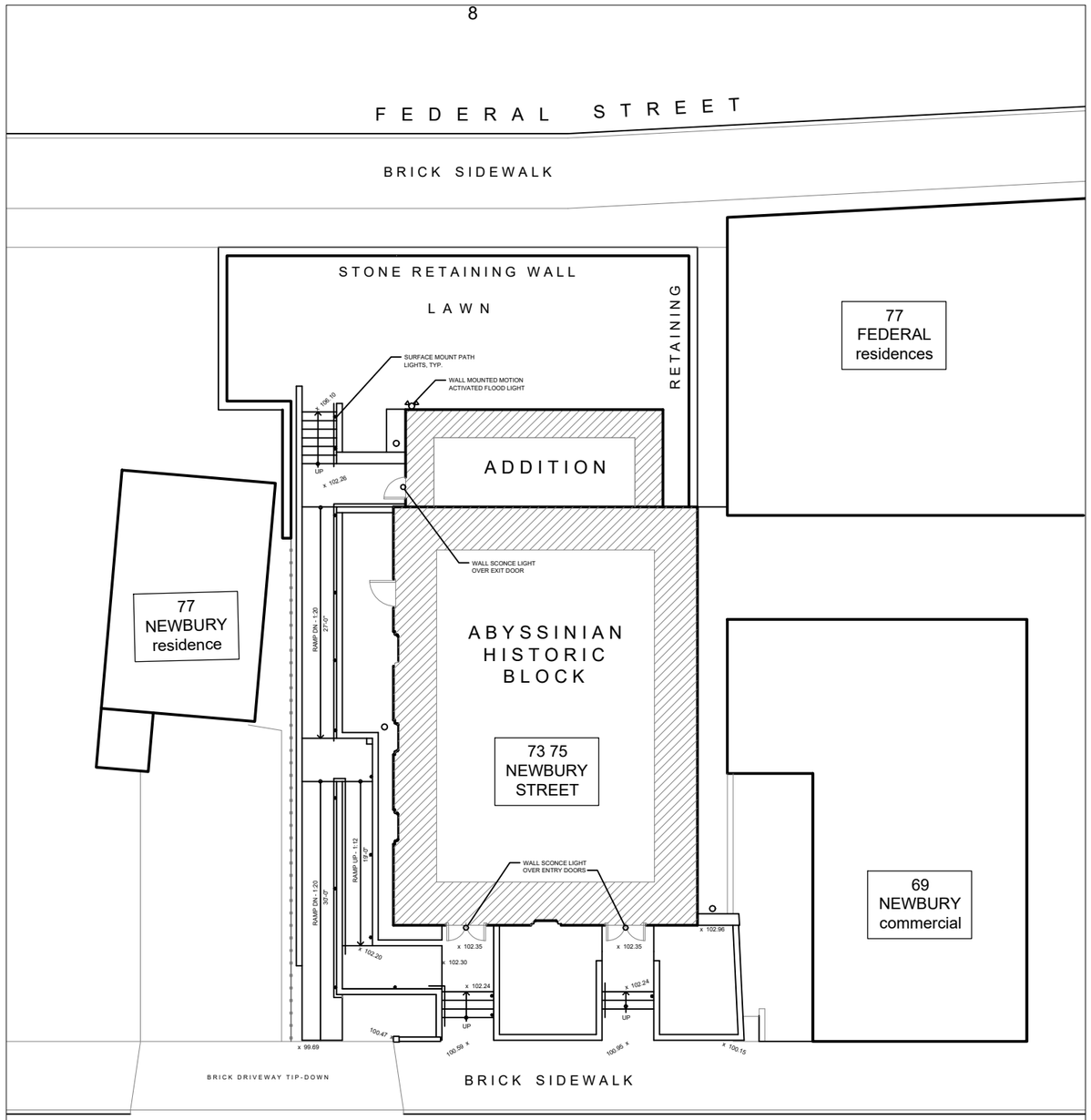

PROPOSED SITE PLAN

1/16" = 1'-0"

N
W E
S

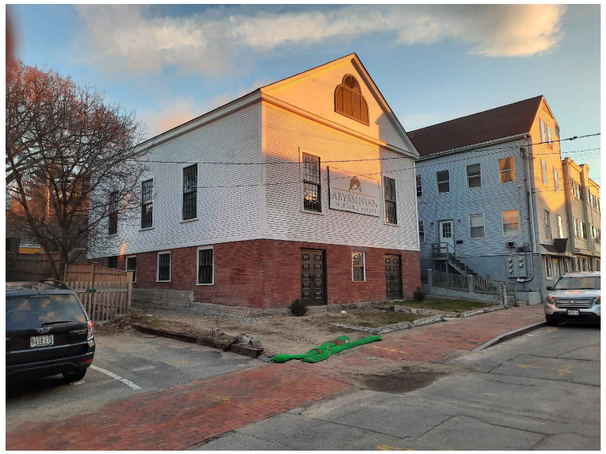

1. NEWBURY STREET



2. NEWBURY STREET



3. NEWBURY STREET

TRILLIUM
ENGINEERING GROUP

TRILLIUM
Engineering Group
Yarmouth, Maine 04096
www: trilliumengineeringgroup.com

CWS Architects
264 US-1 Unit 2A
Scarborough, ME 04074
www: turk-architecture.com

HISTORIC PRESERVATION
Application for Review of the
ABYSSINIAN MEETING HOUSE

OWNER:
Committee to Restore the
ABYSSINIAN MEETING HOUSE

WORKSHOP DATE:
JULY, 2023

PROJECT NO.:
21-067

A-1

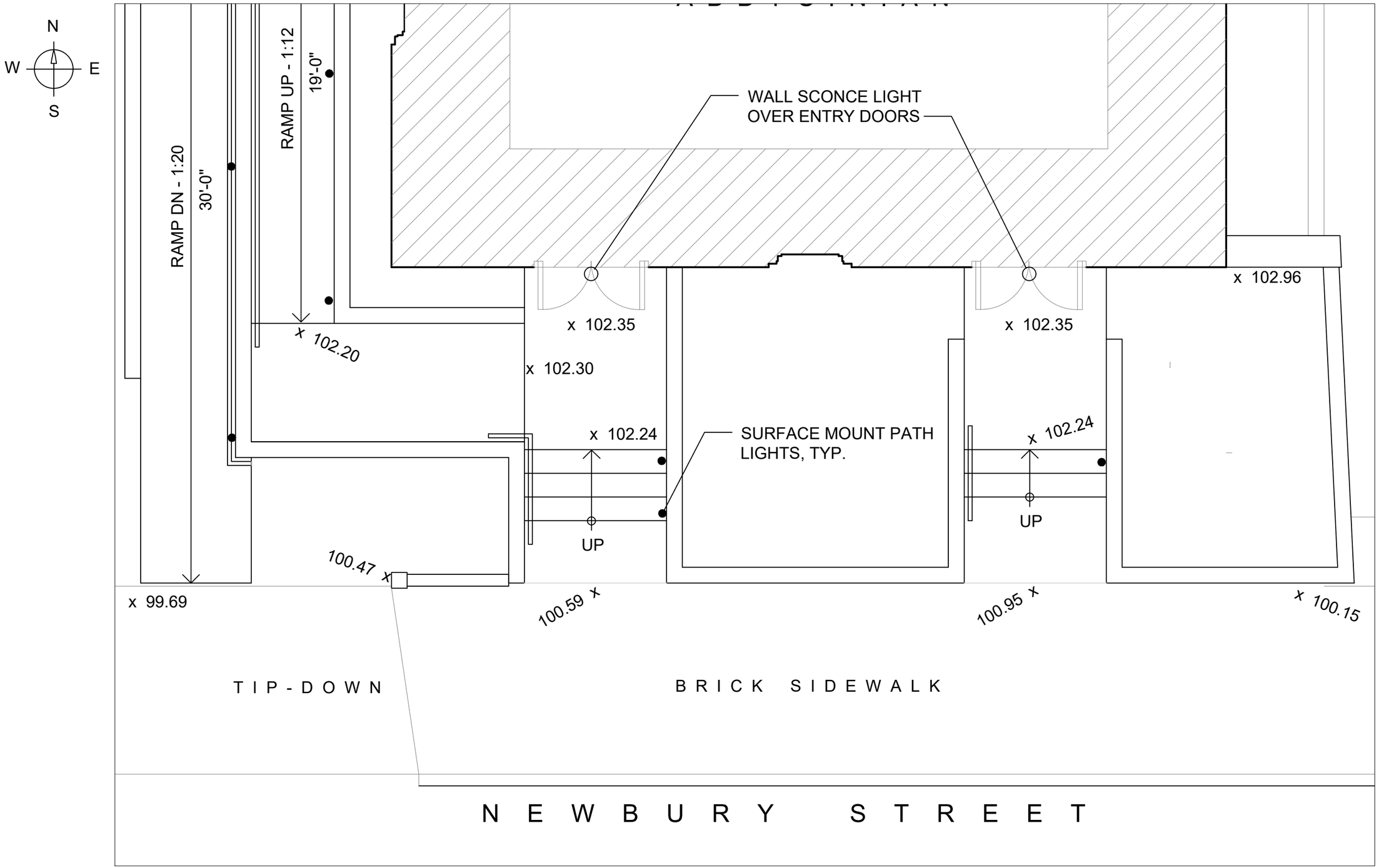

ENLARGED RAMP PLAN

1/4" = 1'-0"

TRILLIUM ENGINEERING GROUP

TRILLIUM
Engineering Group
Yarmouth, Maine 04096
www: trilliumengineeringgroup.com

CWS Architects
264 US-1 Unit 2A
Scarborough, ME 04074
www: turk-architecture.com

HISTORIC PRESERVATION
Application for Review of the
ABYSSINIAN MEETING HOUSE

OWNER:
Committee to Restore the
ABYSSINIAN MEETING HOUSE

PROGRESS DATE:
JULY, 2023

PROJECT NO.:
21-067

A-2

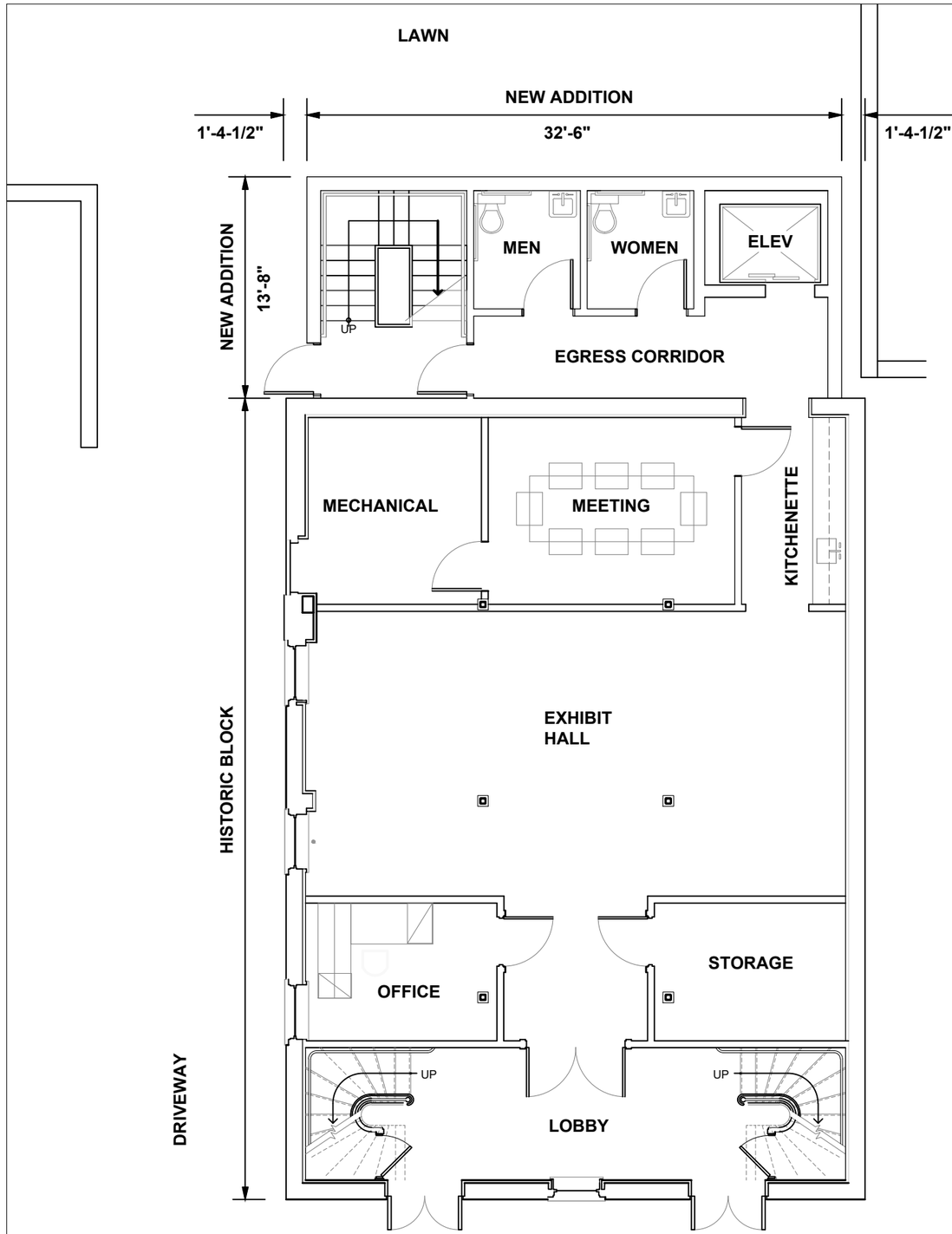

GROUND LEVEL FLOOR PLAN

1/8" = 1'-0"

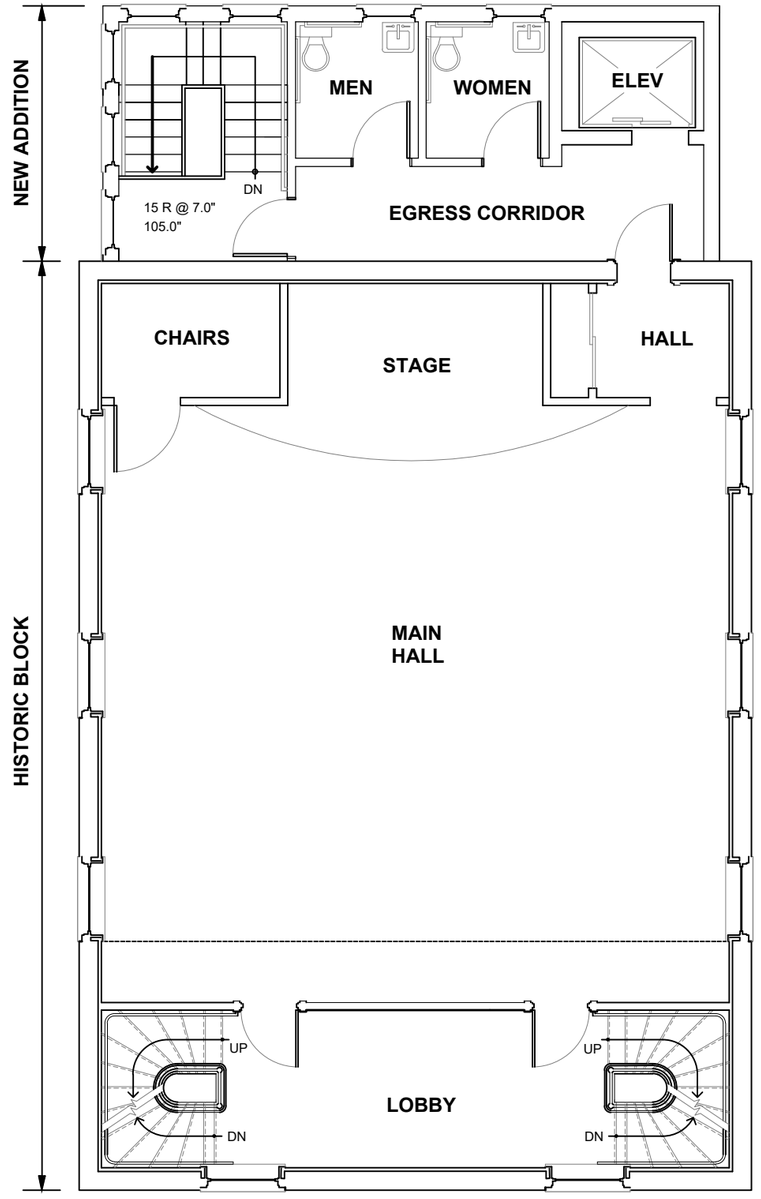

MAIN LEVEL FLOOR PLAN

1/8" = 1'-0"

TRILLIUM ENGINEERING GROUP

TRILLIUM
Engineering Group
Yarmouth, Maine 04096
www: trilliumengineeringgroup.com

CWS Architects
264 US-1 Unit 2A
Scarborough, ME 04074
www: turk-architecture.com

HISTORIC PRESERVATION
Application for Review of the
ABYSSINIAN MEETING HOUSE

OWNER:
Committee to Restore the
ABYSSINIAN MEETING HOUSE

PROGRESS DATE:
JULY, 2023

PROJECT NO.:
21-067

A-3

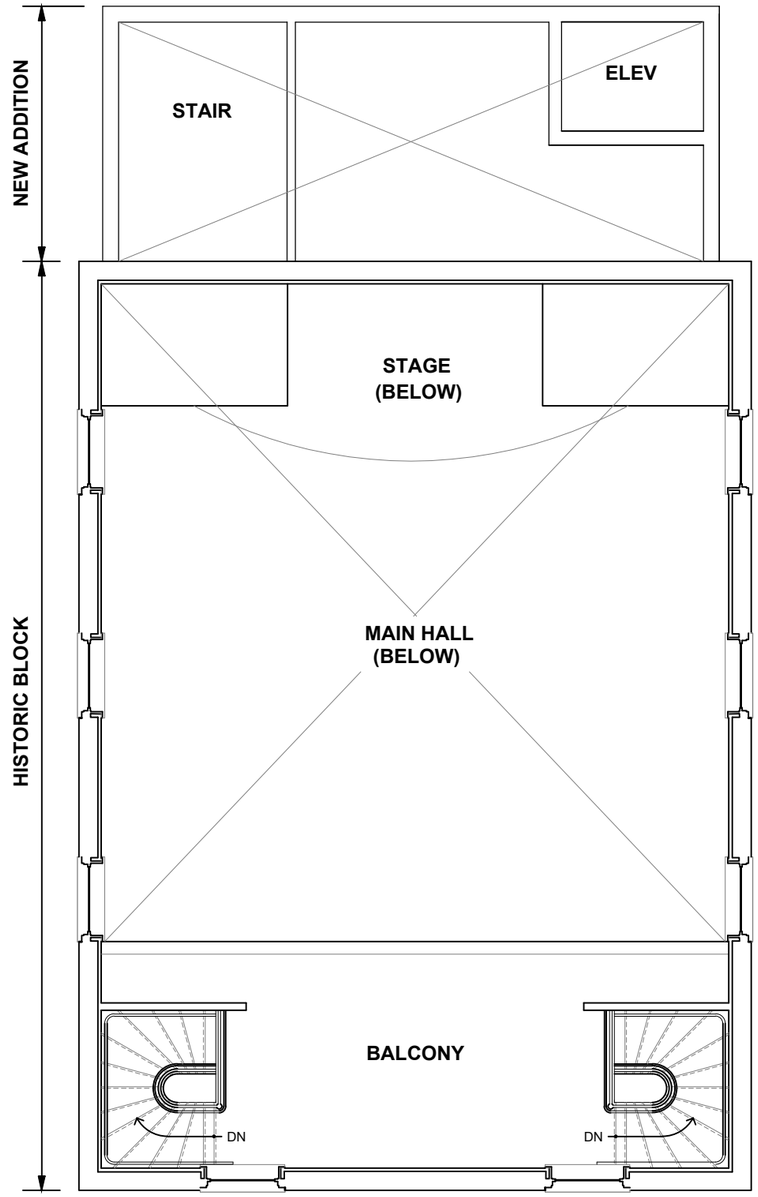

BALCONY FLOOR PLAN

1/8" = 1'-0"

TRILLIUM
ENGINEERING GROUP

TRILLIUM
Engineering Group
Yarmouth, Maine 04096
www: trilliumengineeringgroup.com

HISTORIC PRESERVATION
Application for Review of the
ABYSSINIAN MEETING HOUSE

OWNER:
Committee to Restore the
ABYSSINIAN MEETING HOUSE

WORKSHOP DATE:
JULY, 2023

PROJECT NO.:
21-067

A-4

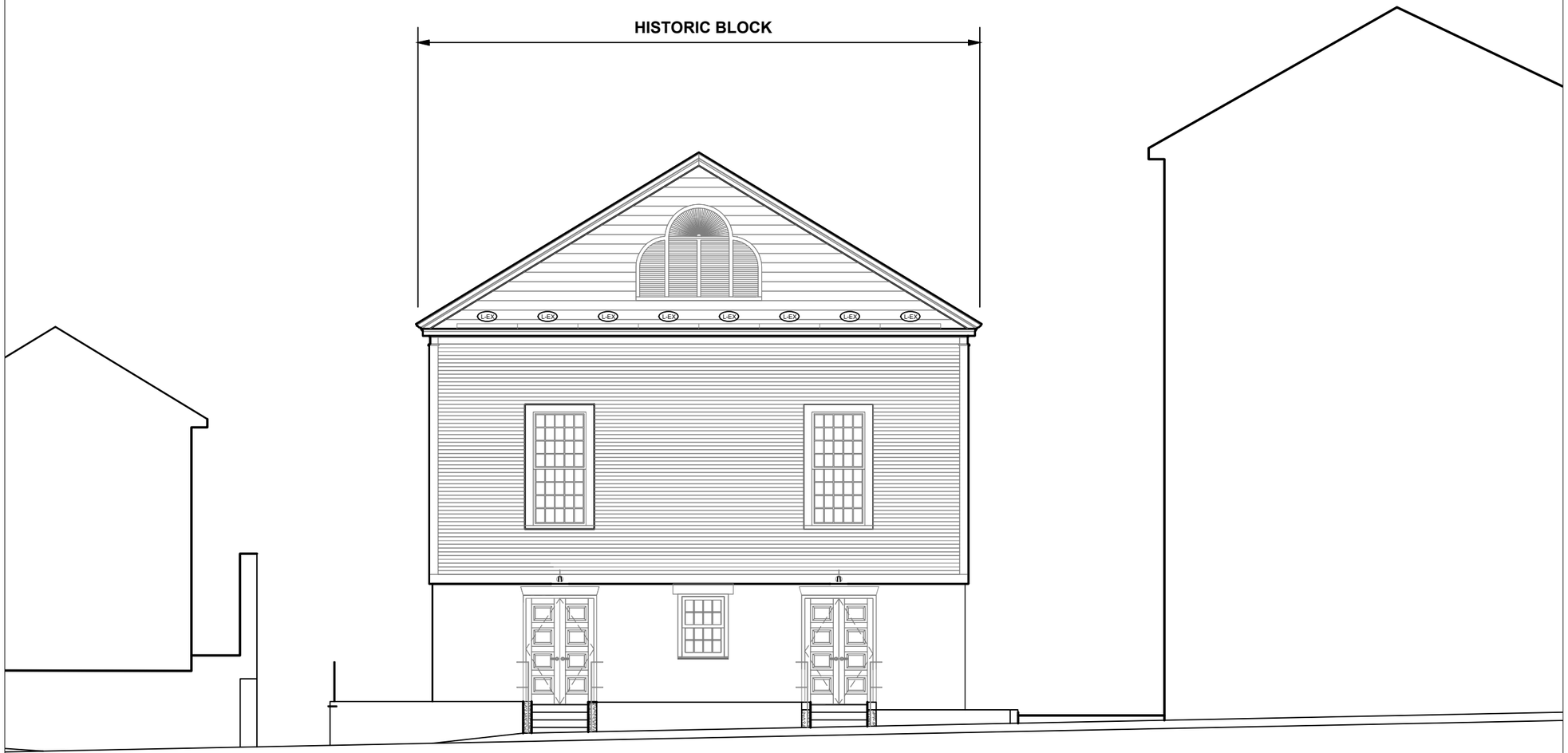

SOUTH ELEVATION

1/8" = 1'-0"

TRILLIUM
ENGINEERING GROUP

TRILLIUM
Engineering Group
Yarmouth, Maine 04096
www: trilliumengineeringgroup.com

CWS Architects
264 US-1 Unit 2A
Scarborough, ME 04074
www: turk-architecture.com

HISTORIC PRESERVATION
Application for Review of the
ABYSSINIAN MEETING HOUSE

OWNER:
Committee to Restore the
ABYSSINIAN MEETING HOUSE

WORKSHOP DATE:
JULY, 2023

PROJECT NO.:
21-067

A-5

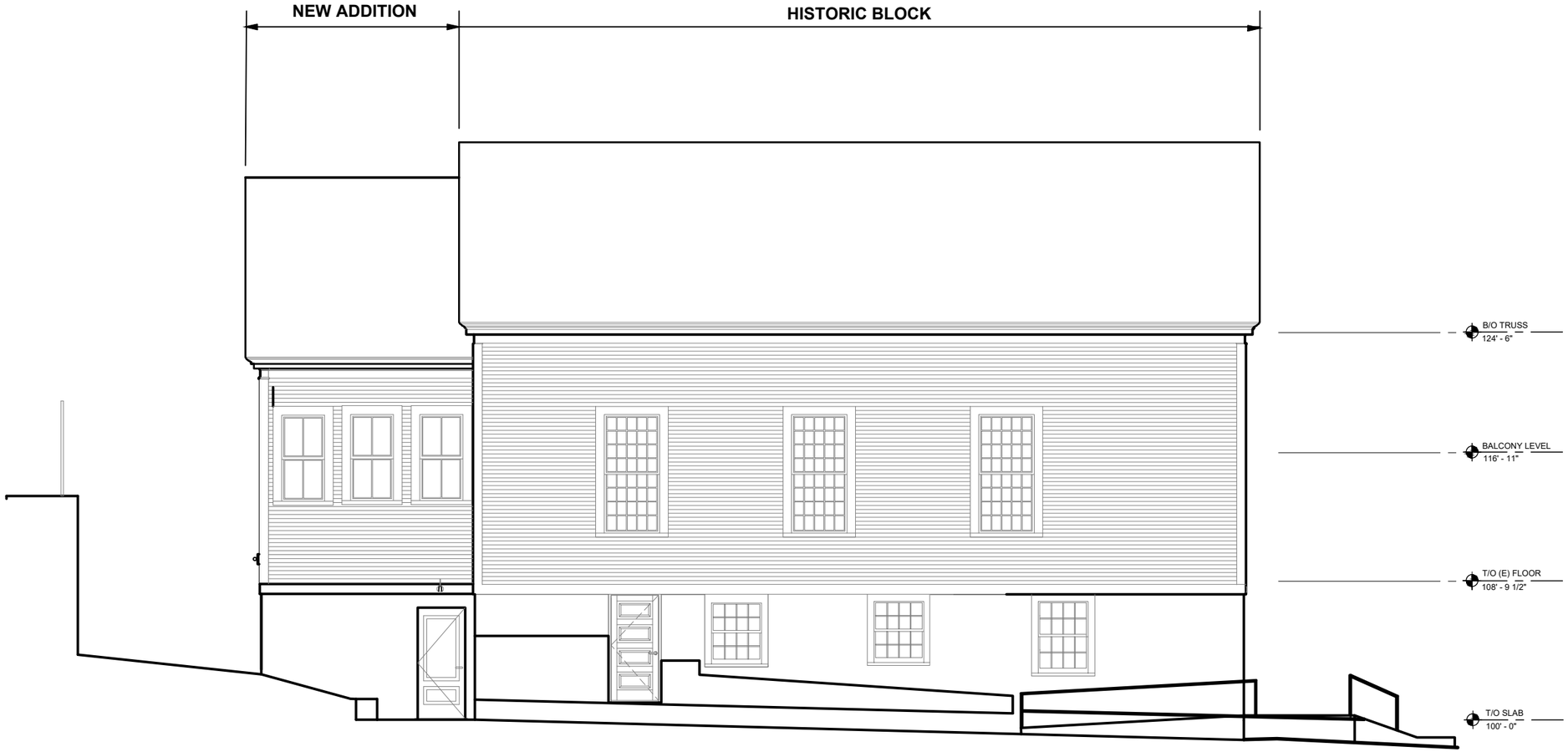

WEST ELEVATION

1/8" = 1'-0"

TRILLIUM
ENGINEERING GROUP

TRILLIUM
Engineering Group
Yarmouth, Maine 04096
www: trilliumengineeringgroup.com

CWS Architects
264 US-1 Unit 2A
Scarborough, ME 04074
www: turk-architecture.com

HISTORIC PRESERVATION
Application for Review of the
ABYSSINIAN MEETING HOUSE

OWNER:
Committee to Restore the
ABYSSINIAN MEETING HOUSE

WORKSHOP DATE:
JULY, 2023

PROJECT NO.:
21-067

A-6

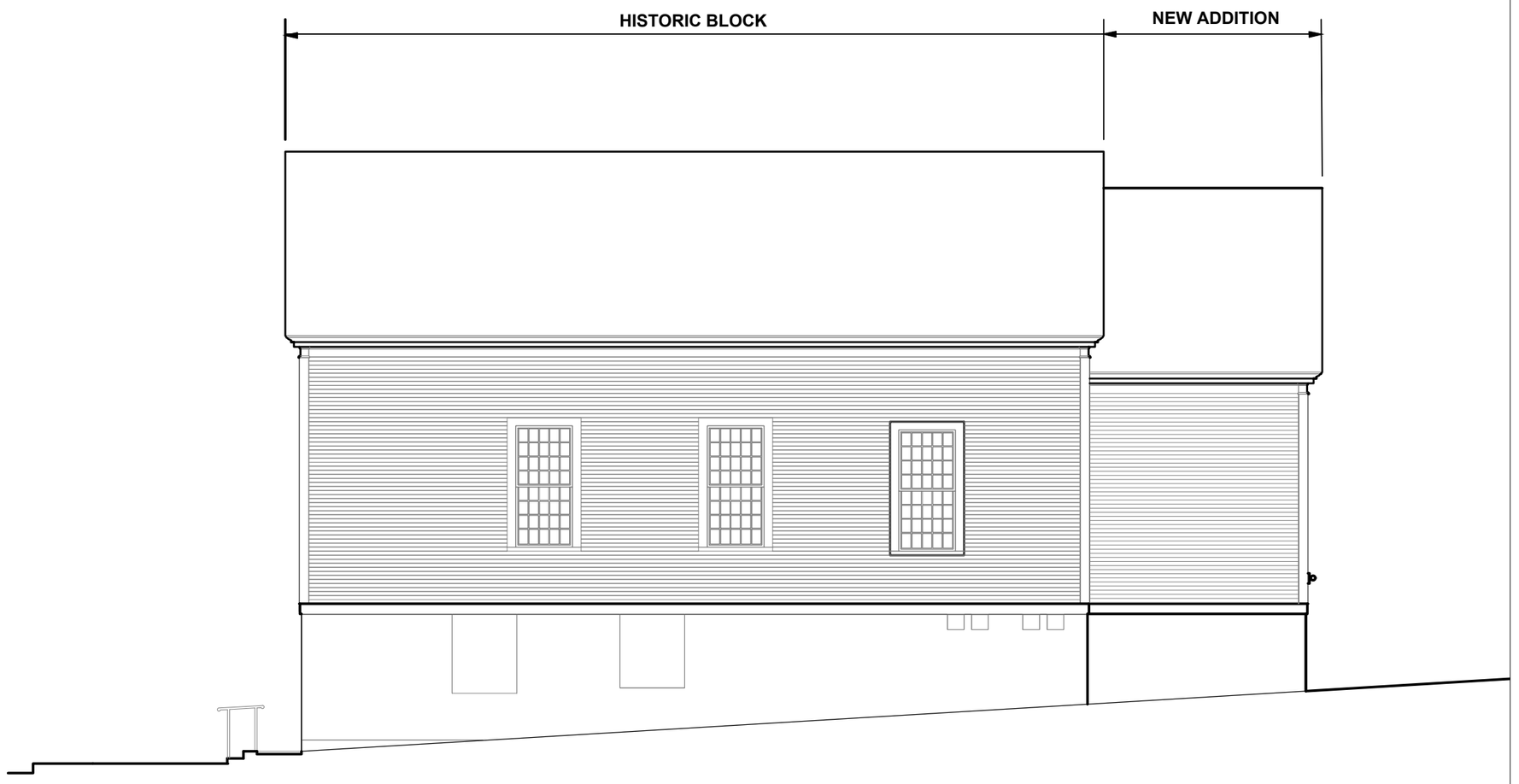

EAST ELEVATION

1/8" = 1'-0"

TRILLIUM
ENGINEERING GROUP

TRILLIUM
Engineering Group
Yarmouth, Maine 04096
www: trilliumengineeringgroup.com

CWS Architects
264 US-1 Unit 2A
Scarborough, ME 04074
www: turk-architecture.com

HISTORIC PRESERVATION
Application for Review of the
ABYSSINIAN MEETING HOUSE

OWNER:
Committee to Restore the
ABYSSINIAN MEETING HOUSE

WORKSHOP DATE:
JULY, 2023

PROJECT NO.:
21-067

A-7

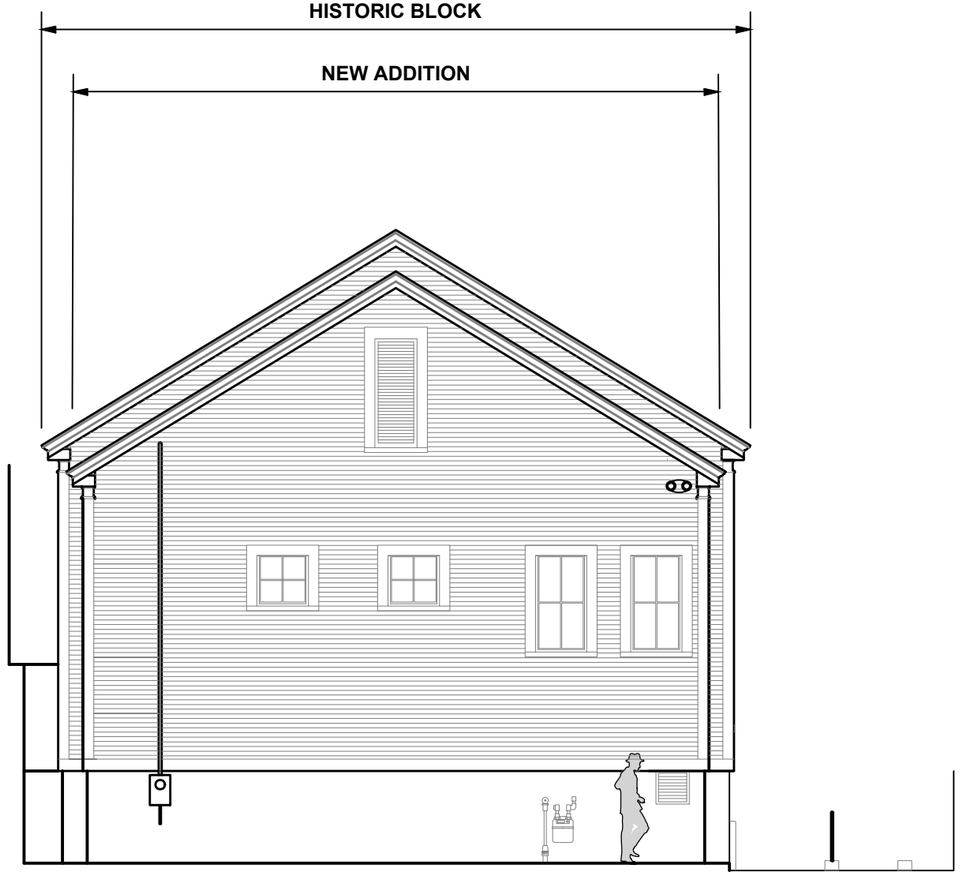

NORTH ELEVATION

1/8" = 1'-0"

TRILLIUM ENGINEERING GROUP

TRILLIUM
Engineering Group
Yarmouth, Maine 04096
www: trilliumengineeringgroup.com

CWS Architects
264 US-1 Unit 2A
Scarborough, ME 04074
www: turk-architecture.com

HISTORIC PRESERVATION
Application for Review of the
ABYSSINIAN MEETING HOUSE

OWNER:
Committee to Restore the
ABYSSINIAN MEETING HOUSE

WORKSHOP DATE:
JULY, 2023

PROJECT NO.:
21-067

A-8

PRINTED: Aug 07, 2023

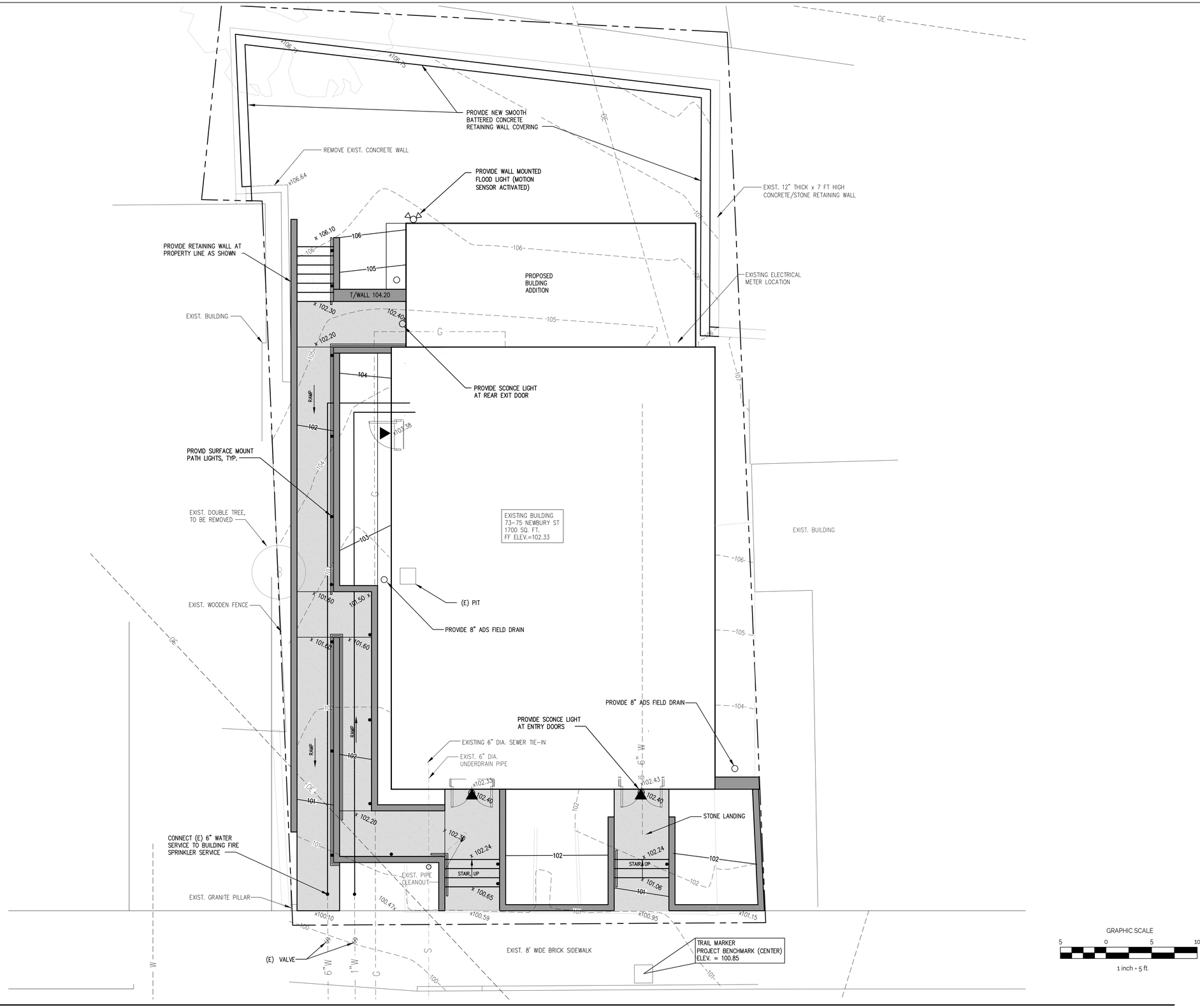

1 PROPOSED SITE PLAN

1" = 5'-0"

TRILLIUM
ENGINEERING GROUP
189 MAIN STREET SUITE 200
YARMOUTH, ME 04096

TURK architecture
63 Washburn Avenue
SUITE 213
PORTLAND, MAINE 04102

207.761.9662
turkarchitecture@gmail.com

PRELIMINARY
NOT FOR CONSTRUCTION

ABYSSINIAN MEETING HOUSE

75 NEWBURY STREET, PORTLAND, ME 04101

RESTORATION

ISSUED

No.	DESCRIPTION	DR. BY	CKD BY	DATE
A	ISSUED FOR REVIEW	ED	ED	4-19-23
B	ISSUED FOR HP REVIEW	ED	ED	8-3-23

SHEET TITLE:

PROPOSED SITE PLAN

DESIGNED:	XX
DRAWN:	XX
DATE:	07-15-2021
PROJECT NUMBER:	21-067

C3

Abyssinian Meeting House

COWLES STUDIO | LANDSCAPE ARCHITECTURE

site | landscape concept

04.05.2023

05.30.2023

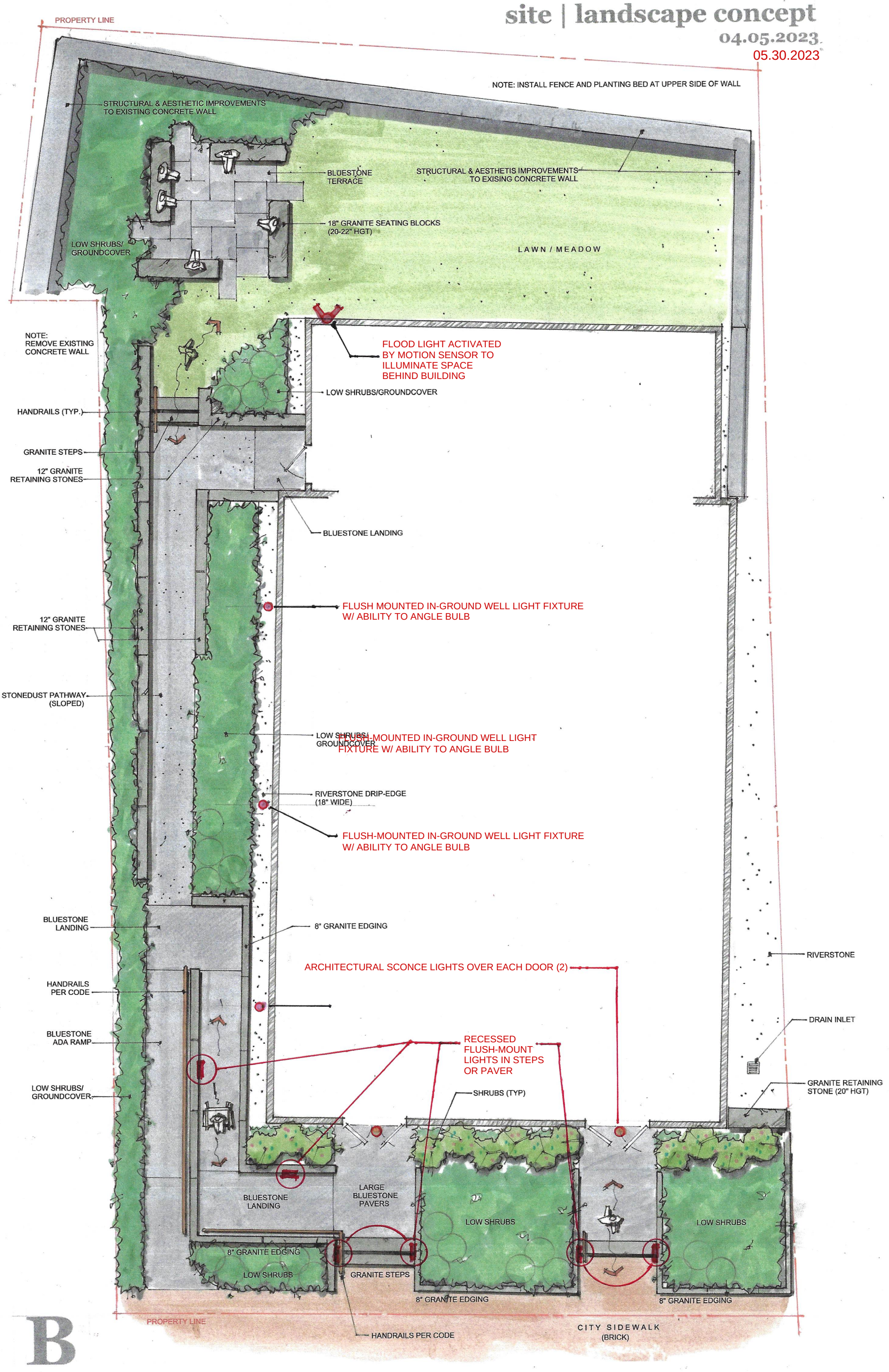

B

Handrail Precedents


A



B



C


D

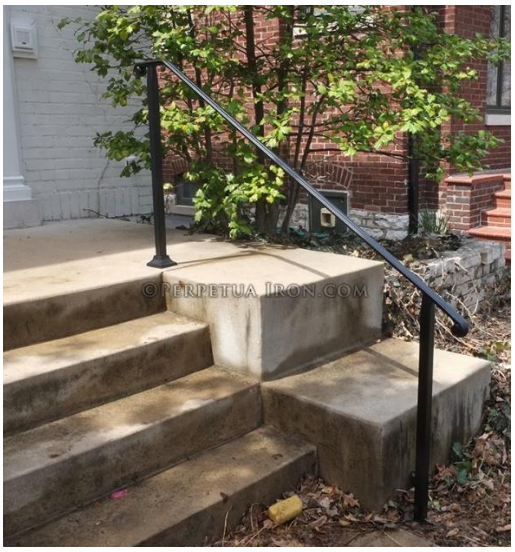

E


F

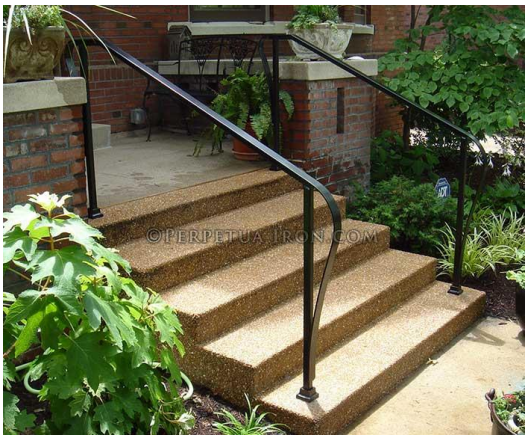

G



J



H



K



I



L

Bellevue Brooklyn 2 Light 13" Tall Outdoor Wall Sconce

Model:**VXWS81646ORBG**



Dimensions

- Height: 13"
- Width: 7-1/2"
- Extension: 4-1/4"
- Product Weight: 3.48 lbs
- Shade Height: 7"
- Shade Width: 4-3/4"
- Backplate Height: 9-1/16"
- Backplate Width: 6-7/16"
- Backplate Depth: 1/2"

Electrical Specifications

- Number of Bulbs: 2
- Max Watts Per Bulb: 60 watts
- Bulb Base: Candelabra (E12)
- Bulb Shape: B10
- Bulb Type: Incandescent
- Bulbs Included: No

Characteristics and Features

Bulb Base	Candelabra (E12)
Bulb Shape	B10
Bulb Type	Incandescent
Bulb Visible	Yes
Dimmable	Yes
Full Backplate	Yes
Glass Features	Clear Glass
LED	No
Light Direction	Ambient Lighting
Material	Steel
Number of Bulbs	2
Number of Light Source(s)	2

Electrical and Operational Information

Power Source	Hardwired
Voltage	120
Voltage Type	Line Voltage (110-120V)
Wattage	120
Watts Per Bulb	60

Features

- Wet rated; ideal for your porch, entryway, garage, or any other area of your home
- Constructed of steel
- Includes a clear glass shade
- (2) 60 watt maximum candelabra (E12) Incandescent bulbs required
- Dimmable with compatible dimming bulbs
- Recommended for use with Vintage Edison bulbs
- Intended for outdoor use
- ETL rated for wet locations
- Covered under a manufacturer 1 year limited warranty

ELK LIGHTING

PRODUCT SPECIFICATION SHEET



ITEM #:	45200/LED
UPC	748119099552
Description	Newcastle LED Outdoor Wall Lamp in Textured Matte Black
Finish	Textured Matte Black
Materials	Glass, Metal
Brand	ELK Lighting
Collection	Newcastle
Category	Outdoor Lighting
Type	Sconce

ITEM DIMENSIONS	
Width	7 inches
Depth	7 inches
Height	13 inches
Weight	5 pounds

ADDITIONAL DIMENSIONS	
Backplate/Canopy	5x7
HCWO	N/A
Min. Extension	N/A
Max. Extension	N/A

OVERALL HEIGHT			
Min.	N/A	**Max.**	N/A

EXTENSION ROD(S)
N/A

RATINGS & SPECIFICATIONS			
Safety Rating	UL	**Certification**	N/A
ADA Compliant	N/A	**Voltage**	N/A

INTEGRATED LED			
Wattage	6 watts	**Total Lumens**	N/A
CRI	N/A	**Color Temperature**	2700K
Other	N/A		

CHAIN / CORD INFORMATION			
Chain	N/A	**Cord**	N/A

SHADE / GLASS DETAILS			
Shade/Glass Description	Water Glass		
Width	N/A	**Height**	N/A
Width at Top	N/A	**Width at Bottom**	N/A

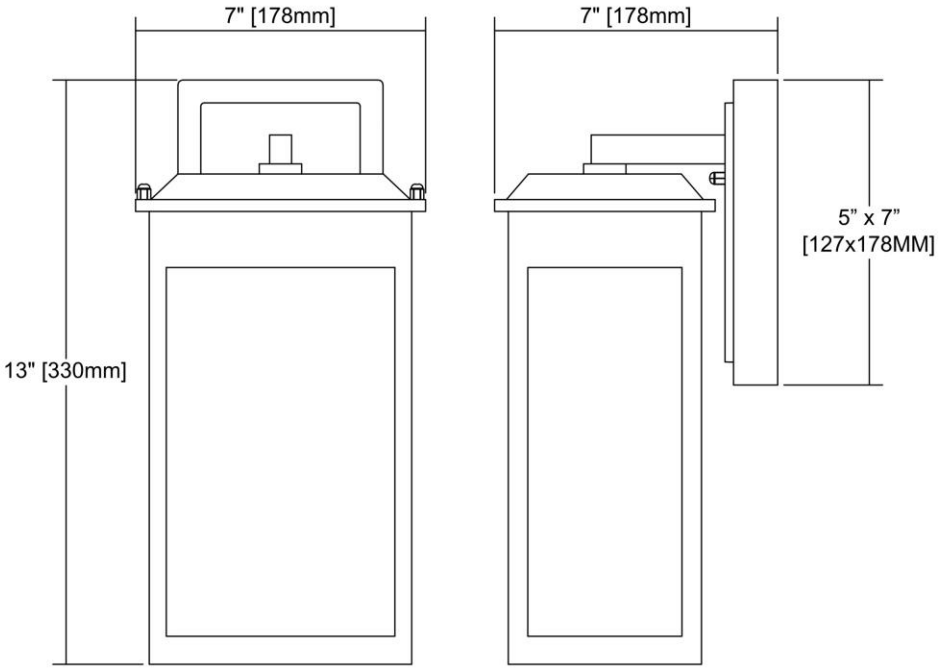

Rev. 5/9/2019

OPEN AIR™
collection



ALFORD PLACE

2560MB-LL

SMALL WALL MOUNT LANTERN

The clean and classic design of Alford Place features a precision die-cast frame, hanging arm and top loop, paired with a sealed glass roof, providing excellent illumination from all sides.

DETAILS	
FINISH:	Museum Black
MATERIAL:	Aluminum
GLASS:	Clear

DIMENSIONS	
WIDTH:	8"
HEIGHT:	14"
WEIGHT:	5.5 lbs.
BACK PLATE:	4.75"W X 5.5"H
EXTENSION:	9"
TOP TO OUTLET:	7"

LIGHT SOURCE	
LIGHT SOURCE:	LED Lamp Included
LED NAME:	E12LED-5
WATTAGE:	2-5w Cand. LED *Included
VOLTAGE:	120v
COLOR TEMP:	2700.0000k
LUMENS:	700
CRI:	80
INCANDESCENT EQUIVALENCY:	2-40w
DIMMABLE:	Yes, on any Incandescent, MLV, ELV, or C-L dimmer.

SHIPPING	
CARTON LENGTH:	11.5"
CARTON WIDTH:	10.5"
CARTON HEIGHT:	17"
CARTON WEIGHT:	6.5 lbs.

PRODUCT DETAILS:

- Suitable for use in wet (interior direct splash and outdoor direct rain or sprinkler) locations as defined by NEC and CEC. Meets United States UL Underwriters Laboratories & CSA Canadian Standards Association Product Safety Standards
- Classic lines and heritage details complement traditional architecture
- Striking black finish enhances design

OPEN AIR™
collection



ALFORD PLACE

2566MB-LL

EXTRA SMALL WALL MOUNT LANTERN

The clean and classic design of Alford Place features a precision die-cast frame, hanging arm and top loop, paired with a sealed glass roof, providing excellent illumination from all sides.

DETAILS	
FINISH:	Museum Black
MATERIAL:	Aluminum
GLASS:	Clear

DIMENSIONS	
WIDTH:	6.5"
HEIGHT:	11.3"
WEIGHT:	9.5 lbs.
BACK PLATE:	5"W X 7.25"H
EXTENSION:	5.3"
TOP TO OUTLET:	6.5"

LIGHT SOURCE	
LIGHT SOURCE:	LED Lamp Included
LED NAME:	E12LED-5
WATTAGE:	1-5w Cand. LED *Included
VOLTAGE:	120v
COLOR TEMP:	2700.0000k
CRI:	80
DIMMABLE:	Yes, on any Incandescent, MLV, ELV, or C-L dimmer.

SHIPPING	
CARTON LENGTH:	12.5"
CARTON WIDTH:	12.5"
CARTON HEIGHT:	23.5"
CARTON WEIGHT:	12 lbs.

PRODUCT DETAILS:

- Mounting hardware is hidden on the backplate to ensure a clean silhouette.
- Suitable for use in wet (interior direct splash and outdoor direct rain or sprinkler) locations as defined by NEC and CEC. Meets United States UL Underwriters Laboratories & CSA Canadian Standards Association Product Safety Standards
- 2 year finish warranty
- Classic lines and heritage details complement traditional architecture
- Striking black finish enhances design

HUNZA™

SURFACE MOUNT



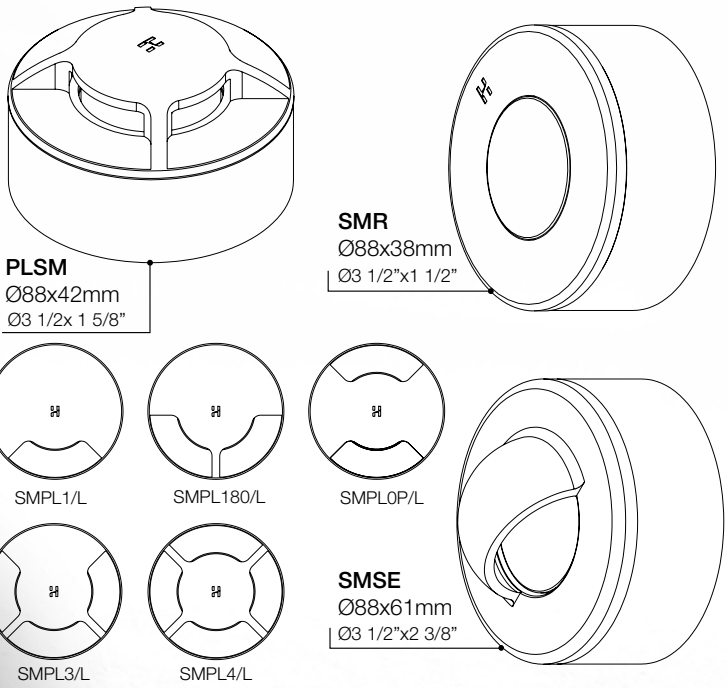

Materials



Natural Copper



316 Stainless Steel

Colour Temperatures

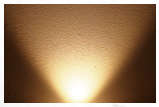

2700K Warm White

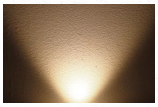

3000K Warm White

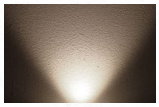

4000K Neutral White

Power Options

Constant Current 350mA	60 Lumens @ 1 Watt
Constant Current 700mA	120 Lumens @ 2 Watts
24VDC	120 Lumens @ 2 Watts

Available Fixtures

Surface Mount Round Light, Surface Mount Solid Eyelid Light and Surface Mount Path Light (flange options: 180 facet, 4 facet 3 facet, 2 facet and 2 facet opposite)

CE c UL us LISTED IP66

BLACK LABEL WARRANTY ★★★★★

HUNZA 10 YEAR WARRANTY* Solid Copper

HUNZA 10 YEAR WARRANTY* Stainless Steel

HUNZA 5 YEAR WARRANTY* Electronics & LED Chips

*T&C's apply. See website for details: hunzalighting.com/warranty

NEW ZEALAND

MADE IN NEW ZEALAND

Contact your Hunza™ Lighting Consultant to arrange training and to learn more.

+64 9 528 9471 **www.hunzalighting.com**

AU Mar 2022 V1

HUNZA™ SLIM



SLIM Path Light

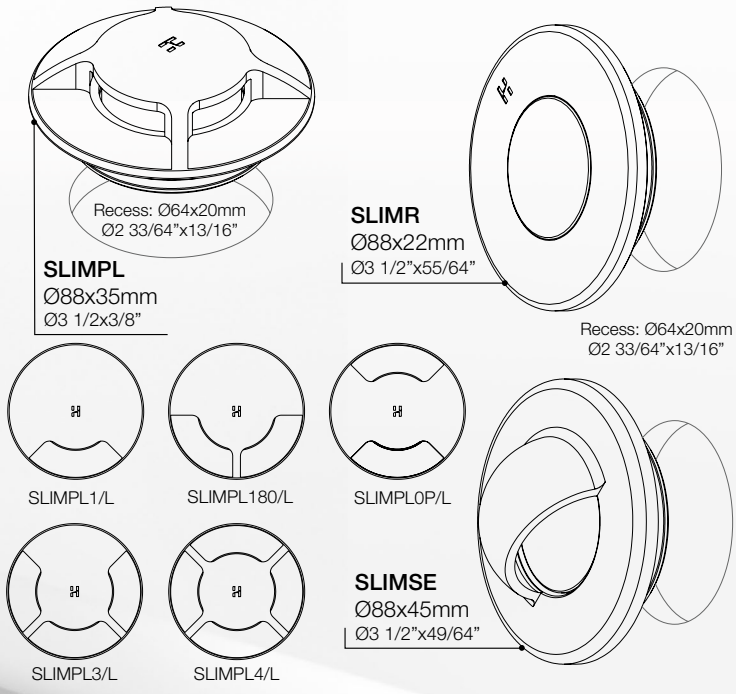

2CM 25/32" SLIM-FIT INSTALL

Easy 2cm deep recess installation, simply drill a hole and snug fit the fixture into a 64mm wide by 20mm (2 33/64" x 13/16") deep recess.

Perfect for deck mounting and exterior mounting.



SLIM Round Light



SLIM Solid Eyelid Light

Materials



Natural Copper



316 Stainless Steel

Colour Temperatures

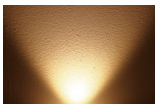

2700K Warm White

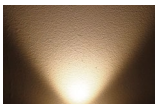

3000K Warm White

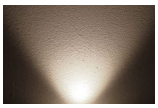

4000K Neutral White

Power Options

Constant Current 350mA	60 Lumens @ 1 Watt
Constant Current 700mA	120 Lumens @ 2 Watts
24VDC	120 Lumens @ 2 Watts

Available Fixtures

Surface Mount Round Light, Surface Mount Solid Eyelid Light and Surface Mount Path Light (flange options: 180 facet, 4 facet 3 facet, 2 facet and 2 facet opposite)

CE c UL us LISTED IP66



*T&C's apply. See website for details: hunzalighting.com/warranty

NEW ZEALAND **MADE IN NEW ZEALAND**

Contact your Hunza™ Lighting Consultant to arrange training and to learn more.

+64 9 528 9471 **www.hunzalighting.com**

AU Mar 2022 V1

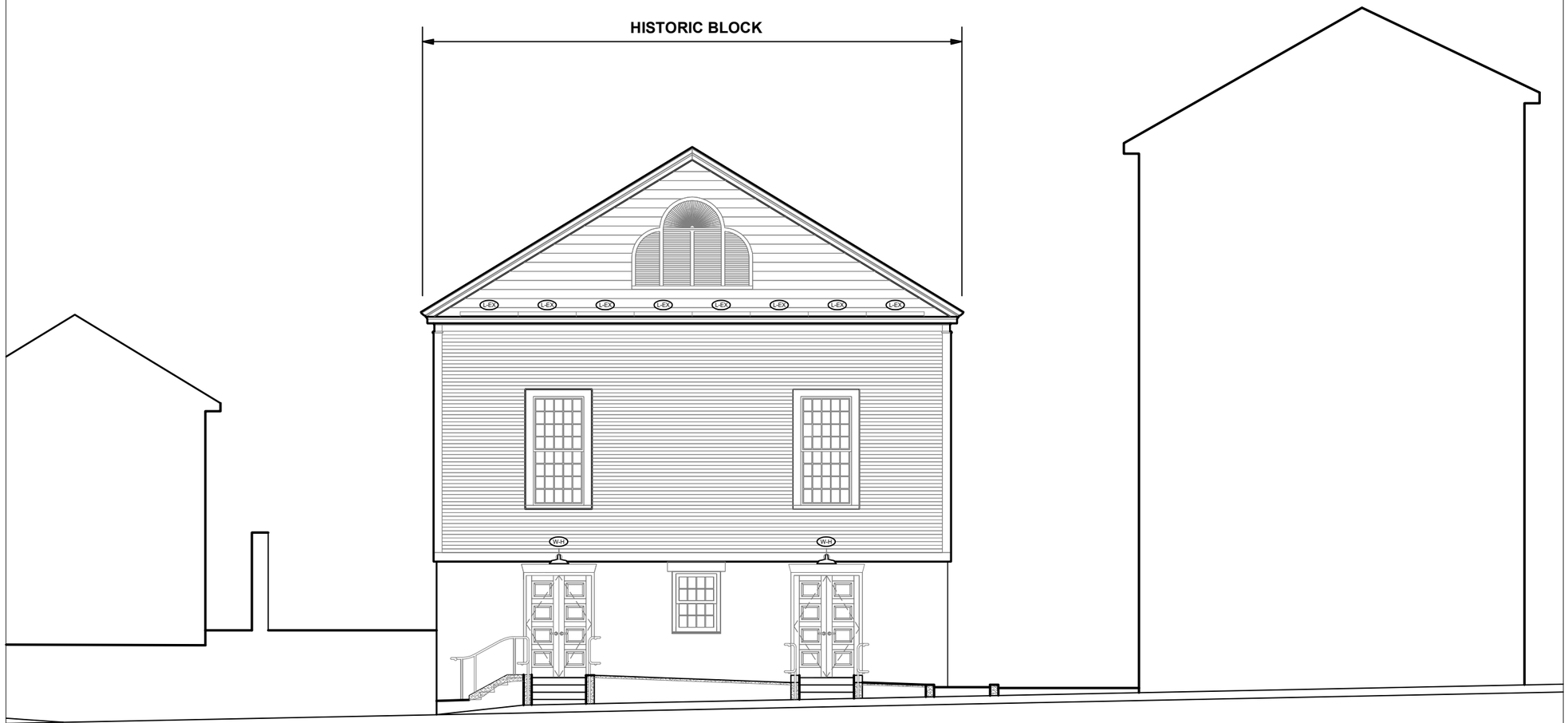

SOUTH ELEVATION

1/8" = 1'-0"

PROGRESS 3 FEBRUARY 2023

TRILLIUM
Engineering Group
Yarmouth, Maine 04096
www.trilliumengineeringgroup.com

TURK architecture
63 Washburn Avenue
Portland, Maine 04102
www. turk-architecture.com

HISTORIC PRESERVATION
Application for Review of the
ABYSSINIAN MEETING HOUSE

OWNER:
Committee to Restore the
ABYSSINIAN MEETING HOUSE

WORKSHOP DATE:
1 MARCH 2023

PROJECT NO.:
202106

A-5

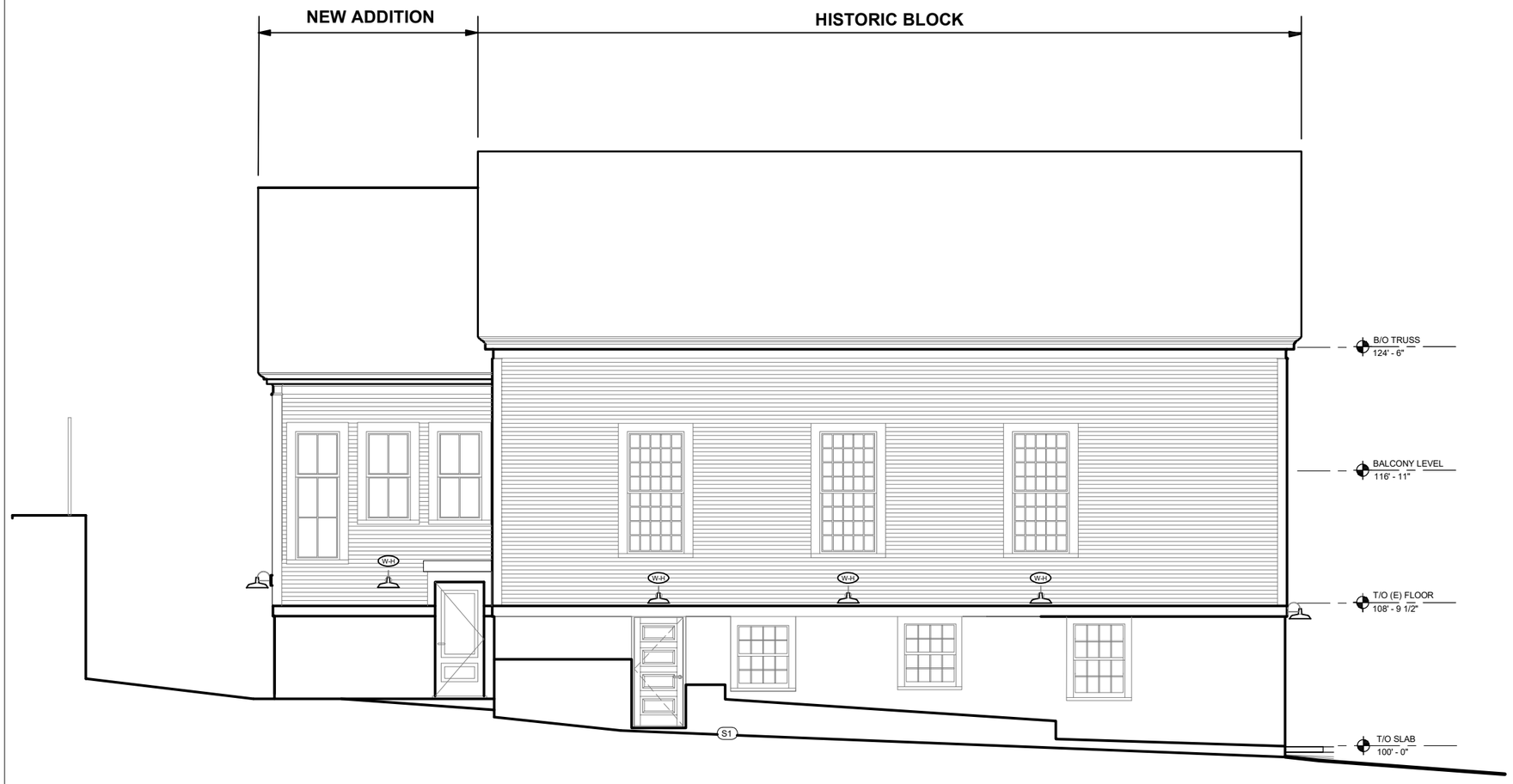

WEST ELEVATION

1/8" = 1'-0"

PROGRESS 3 FEBRUARY 2023

TRILLIUM Engineering Group
Yarmouth, Maine 04096
www: trilliumengineeringgroup.com

TURK architecture
63 Washburn Avenue
Portland, Maine 04102
www: turk-architecture.com

HISTORIC PRESERVATION
Application for Review of the
ABYSSINIAN MEETING HOUSE

OWNER:
Committee to Restore the
ABYSSINIAN MEETING HOUSE

WORKSHOP DATE:
1 MARCH 2023

PROJECT NO.:
202106

A-6

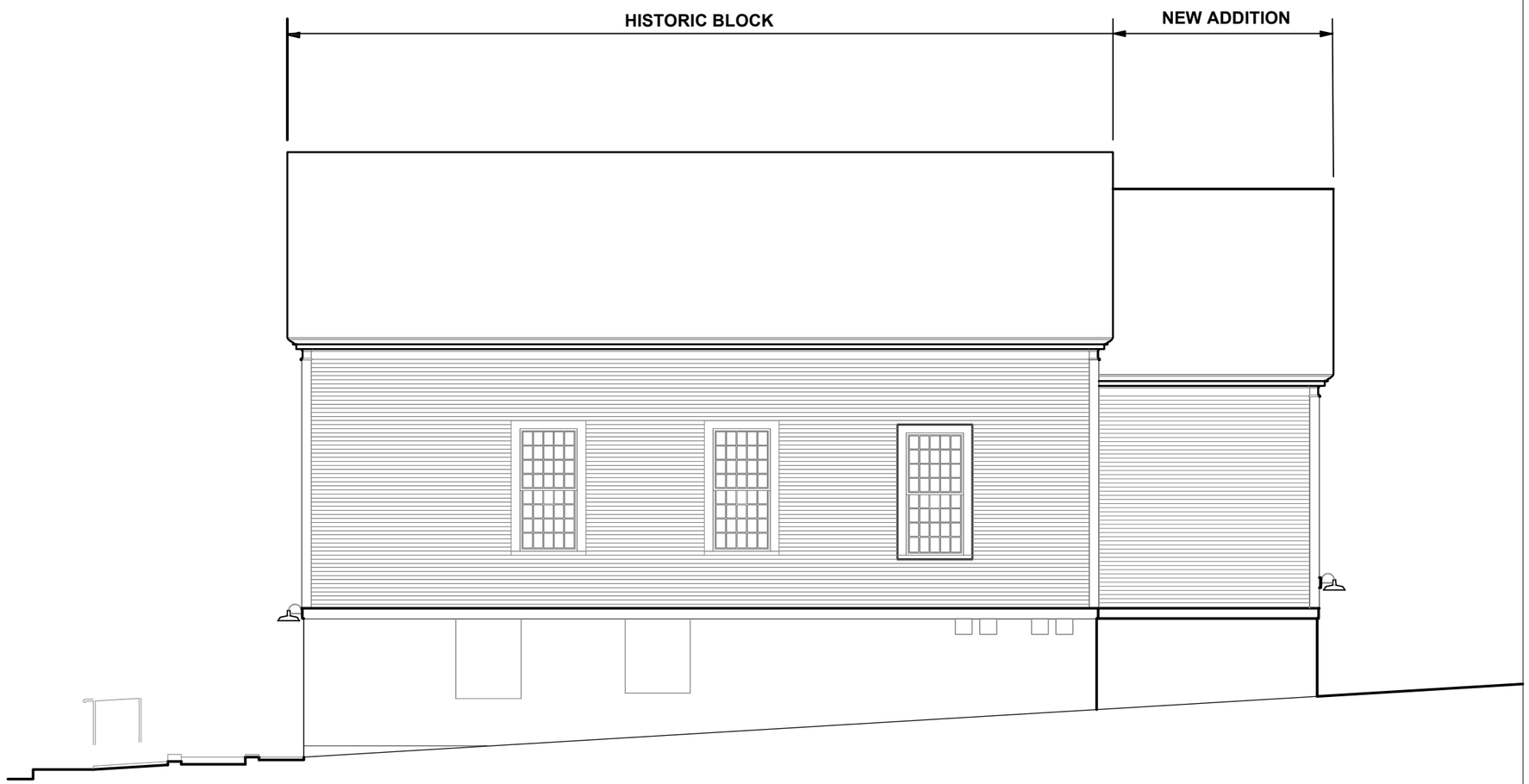

EAST ELEVATION

1/8" = 1'-0"

PROGRESS 3 FEBRUARY 2023

TRILLIUM
Engineering Group
Yarmouth, Maine 04096
www.trilliumengineeringgroup.com

TURK architecture
63 Washburn Avenue
Portland, Maine 04102
www.turk-architecture.com

HISTORIC PRESERVATION
Application for Review of the
ABYSSINIAN MEETING HOUSE

OWNER:
Committee to Restore the
ABYSSINIAN MEETING HOUSE

WORKSHOP DATE:
1 MARCH 2023

PROJECT NO.:
202106

A-7

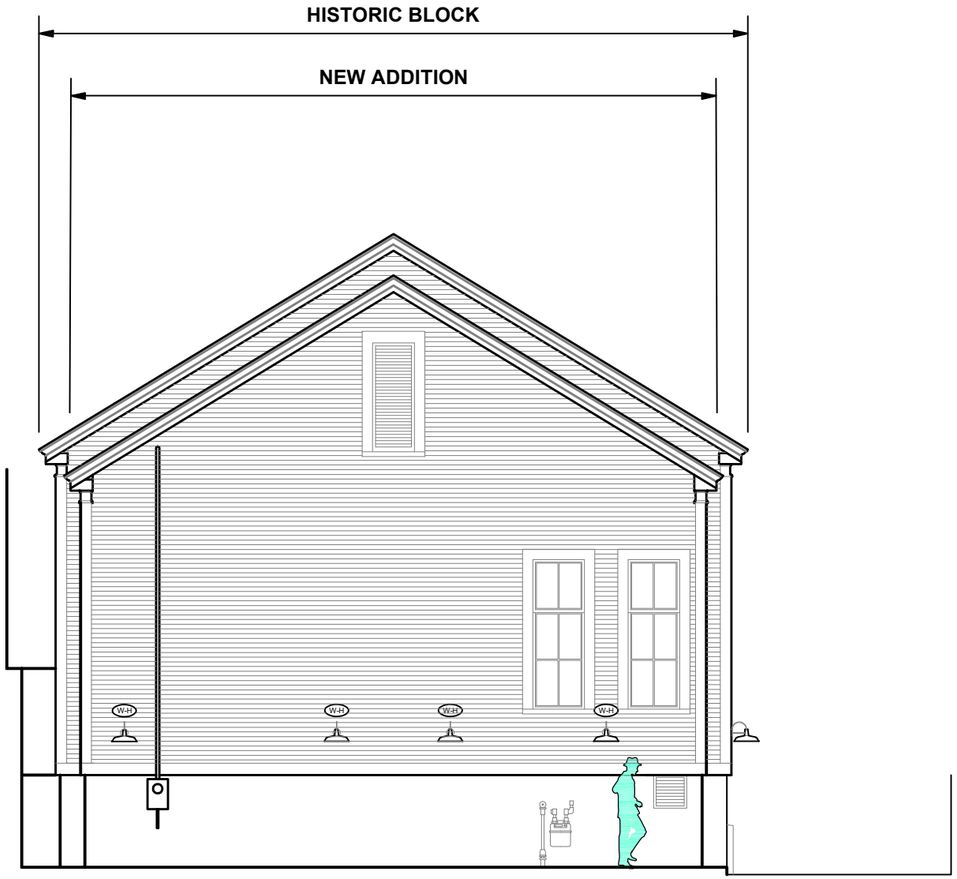

NORTH ELEVATION

1/8" = 1'-0"

PROGRESS 2 FEBRUARY 2023

TRILLIUM Engineering Group
Yarmouth, Maine 04096
www: trilliumengineeringgroup.com

TURK architecture
63 Washburn Avenue
Portland, Maine 04102
www: turk-architecture.com

HISTORIC PRESERVATION
Application for Review of the
ABYSSINIAN MEETING HOUSE

OWNER:
Committee to Restore the
ABYSSINIAN MEETING HOUSE

WORKSHOP DATE:
1 MARCH 2023

PROJECT NO.:
202106

A-8

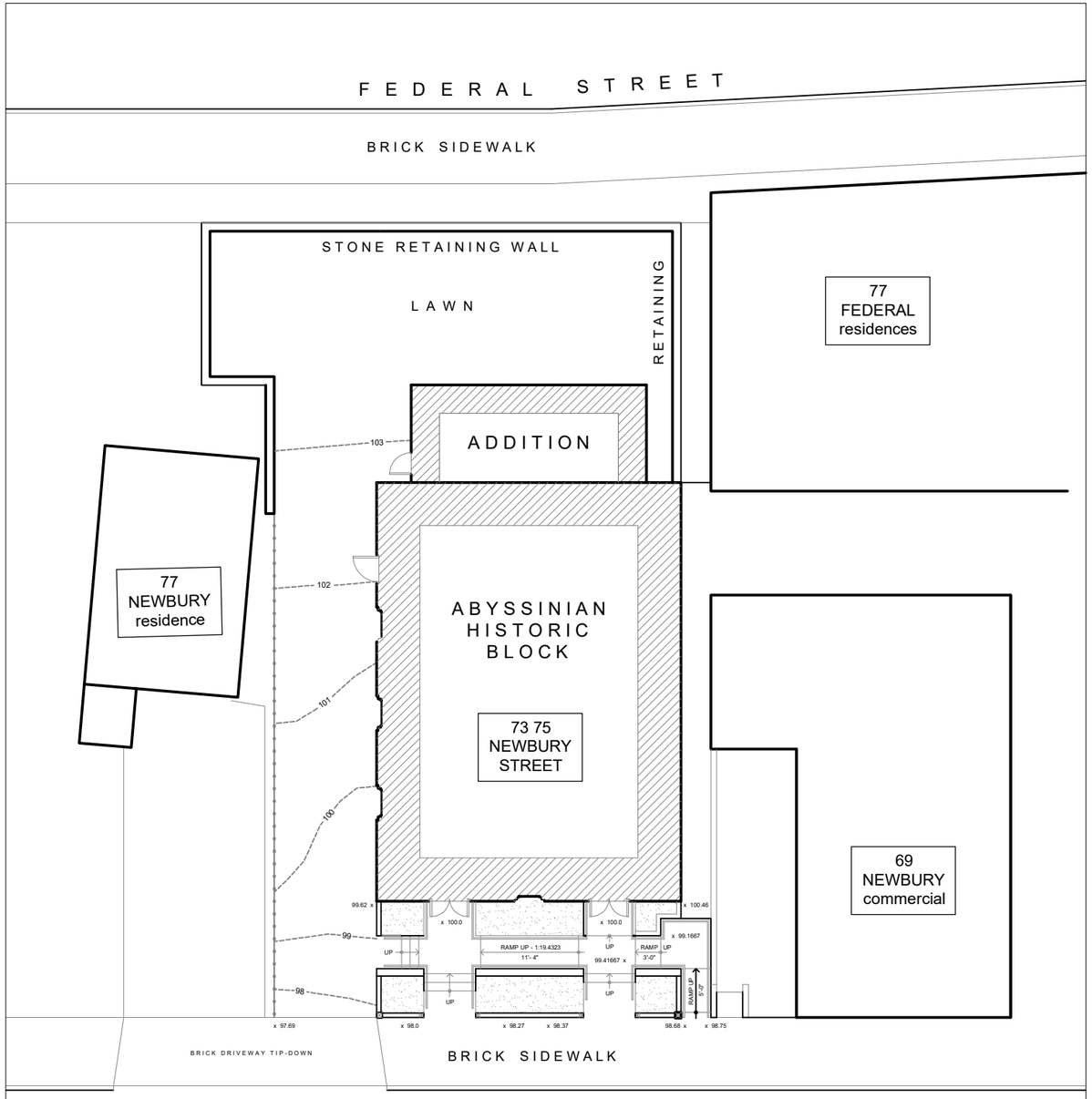

PROPOSED SITE PLAN

1/16" = 1'-0"

N
W E
S

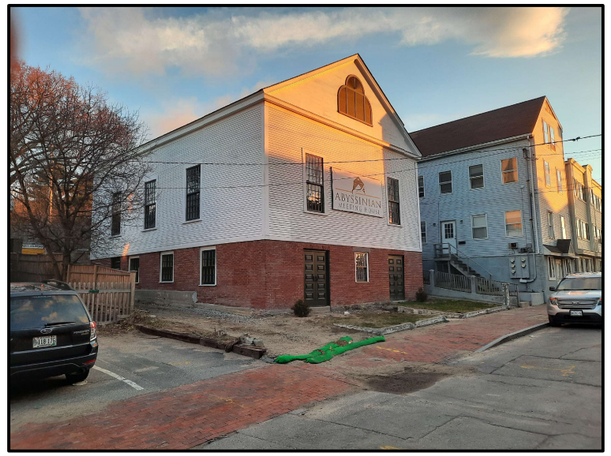

1. NEWBURY STREET



2. NEWBURY STREET



3. NEWBURY STREET

PROGRESS 3 FEBRUARY 2023

TRILLIUM
Engineering Group
Yarmouth, Maine 04096
www: trilliumengineeringgroup.com

TURK architecture
63 Washburn Avenue
Portland, Maine 04102
www: turk-architecture.com

HISTORIC PRESERVATION
Application for Review of the
ABYSSINIAN MEETING HOUSE

OWNER:
Committee to Restore the
ABYSSINIAN MEETING HOUSE

WORKSHOP DATE:
1 MARCH 2023

PROJECT NO.:
202106

A-1

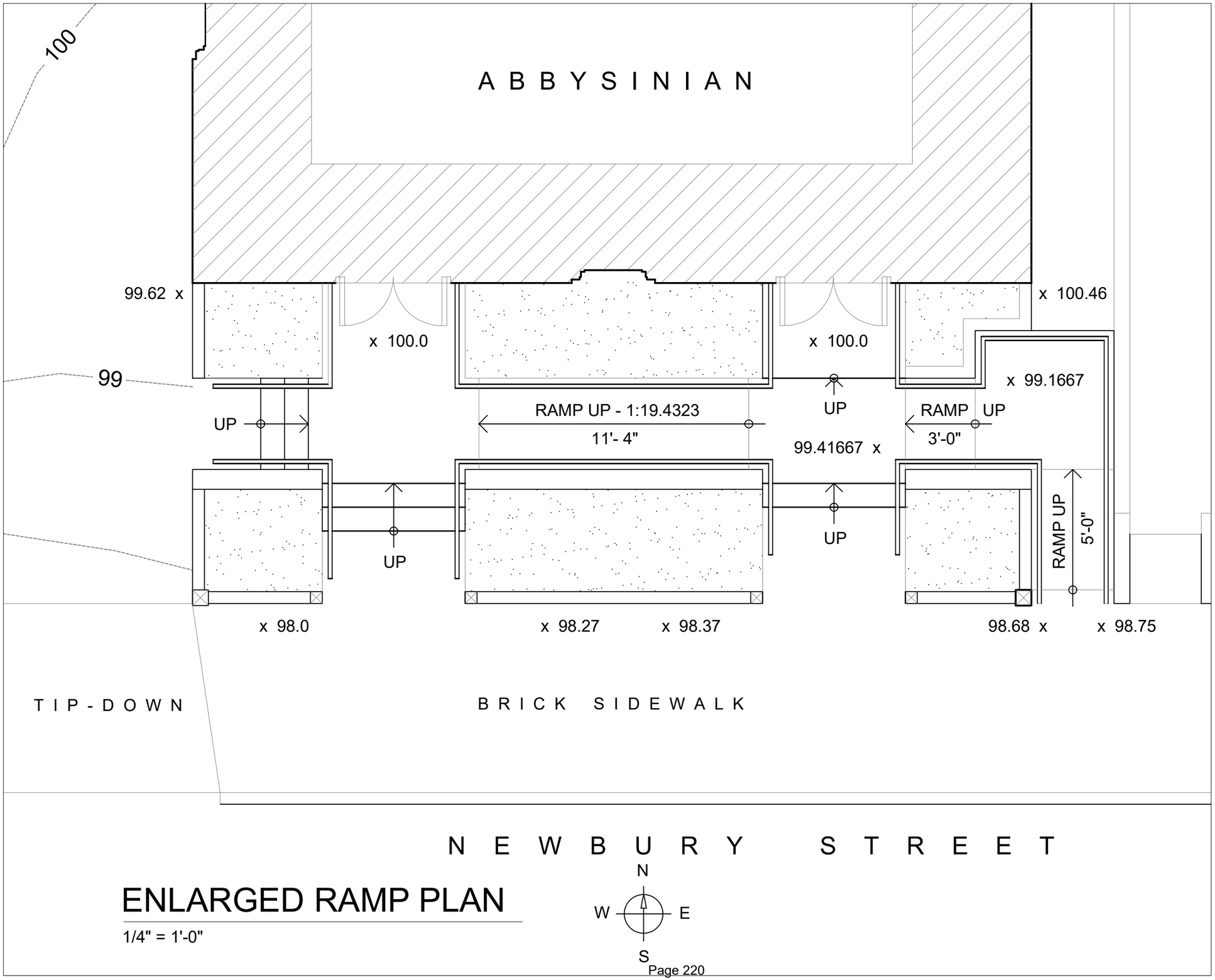

ENLARGED RAMP PLAN

1/4" = 1'-0"

PROGRESS 3 FEBRUARY 2023

TRILLIUM Engineering Group
Yarmouth, Maine 04096
www: trilliumengineeringgroup.com

TURK architecture
63 Washburn Avenue
Portland, Maine 04102
www: turk-architecture.com

HISTORIC PRESERVATION
Application for Review of the
ABYSSINIAN MEETING HOUSE

OWNER:
Committee to Restore the
ABYSSINIAN MEETING HOUSE

PROGRESS DATE:
1 MARCH 2023

PROJECT NO.:
202106

A-2


W-H
W-H

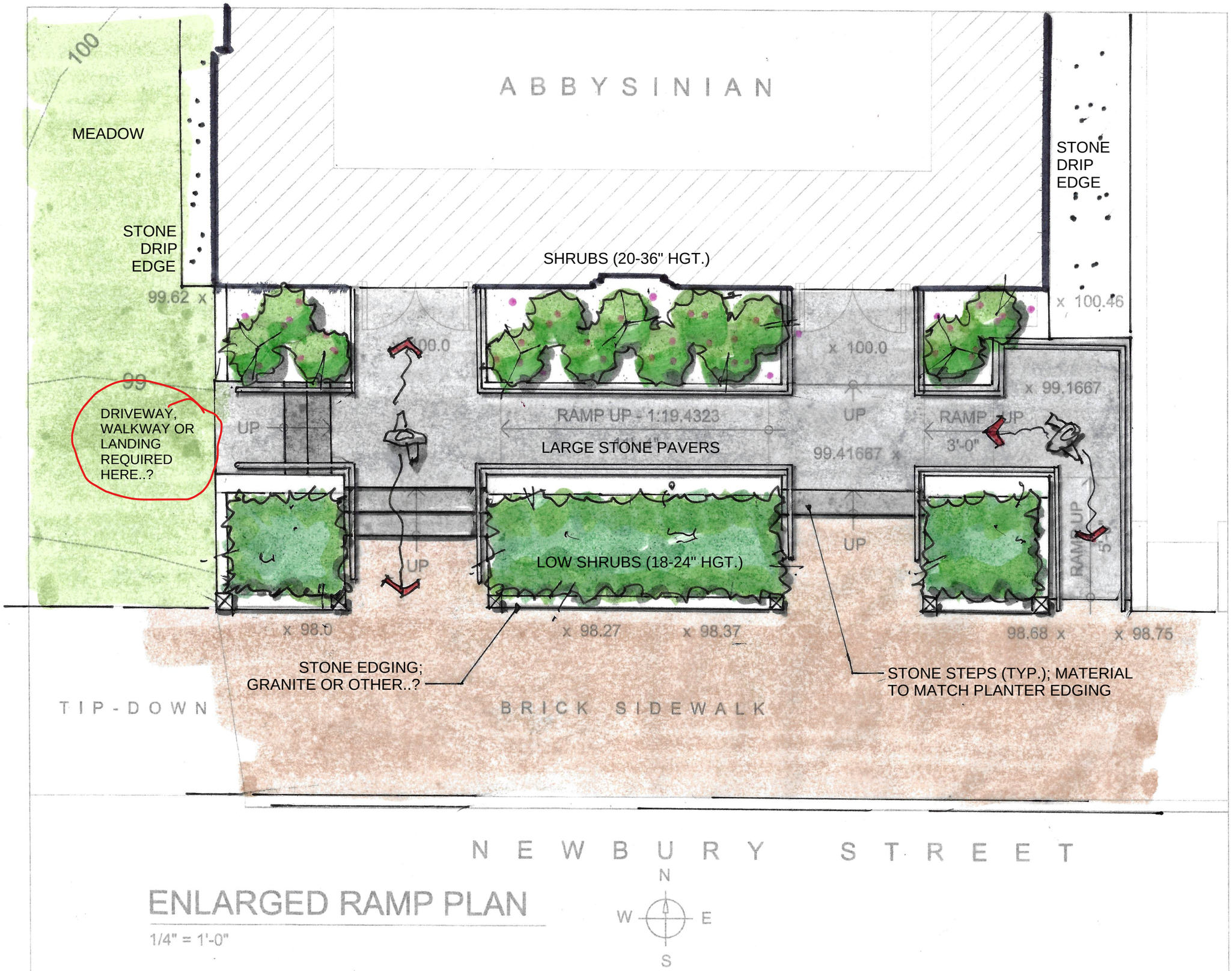

ENLARGED RAMP PLAN

1/4" = 1'-0"

PROGRESS 29 JULY 2022

TRILLIUM Engineering Group
Yarmouth, Maine 04096
www: trilliumengineeringgroup.com

TURK architecture
63 Washburn Avenue
Portland, Maine 04102
www: turk-architecture.com

HISTORIC PRESERVATION
Application for Review of the
ABYSSINIAN MEETING HOUSE

OWNER:
Committee to Restore the
ABYSSINIAN MEETING HOUSE

PROGRESS DATE:
29 JULY 2022

PROJECT NO.:
202106

A-2

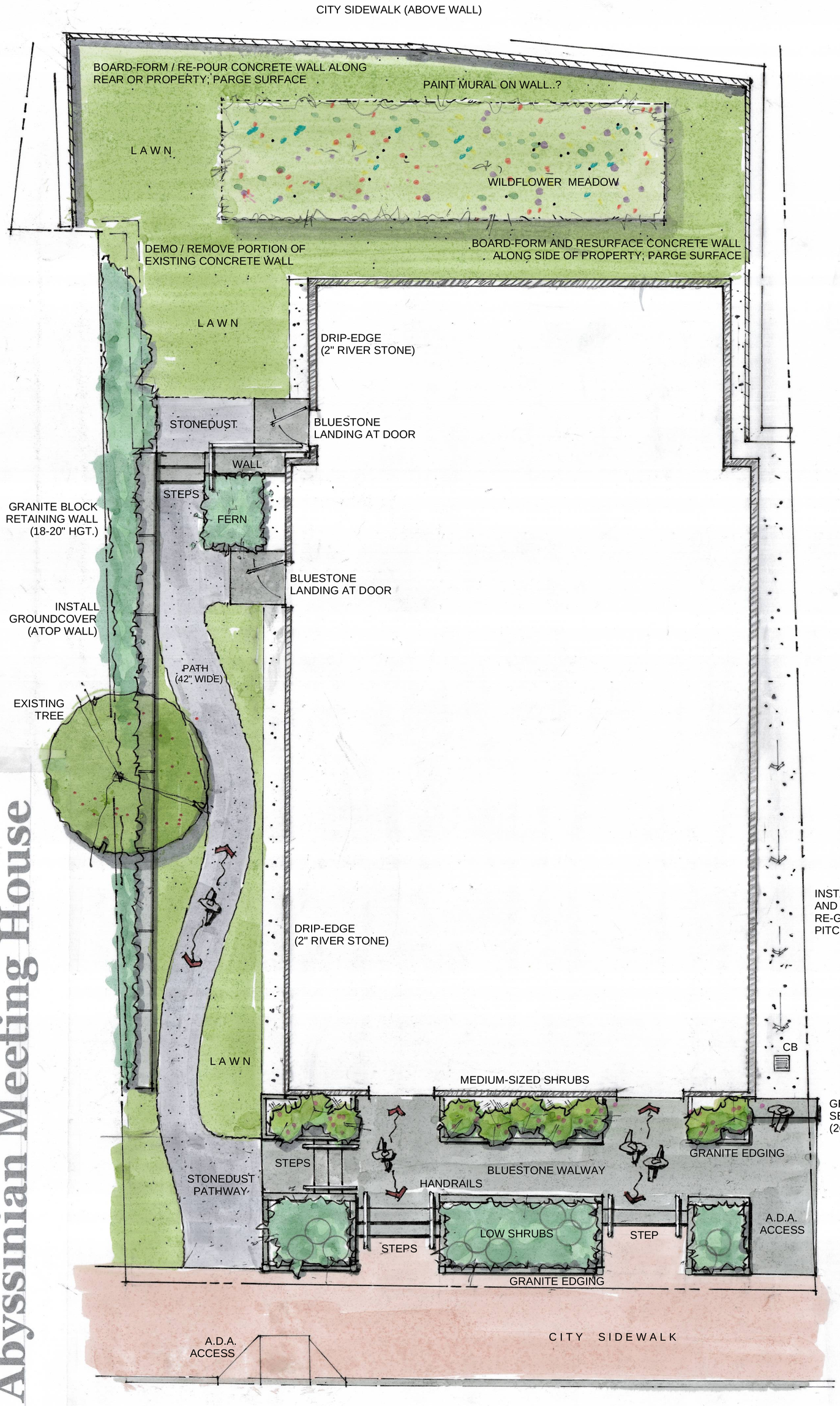

Abyssinian Meeting House

site | landscape concept

10.19.2022

TRILLIUM ENGINEERING
TURK ARCHITECTURE
COWLES STUDIO | LANDSCAPE ARCHITECTURE

PROJECT MEMO:

TO: **Eric Dube, Trillium Engineering Group**
Cc: **John Turk, Architect**
DATE: **September 29, 2022**
Project: **Abyssinian Meeting House- Site Observations**

East Side of Site
▪ Brick on façade is spalling from back-splash due to bituminous swale/drainage gulley
▪ Saw-cut and remove bituminous pavement strip along side of building..?
▪ Install flashing or Bituthene membrane/flashing below grade to prevent moisture
▪ Install small catch basin; Install River stone in swale; Re-grade to drain inlet

Front (South) Side of Property
▪ John of opinion that granite thresholds at main entrance may not have to be replaced; Perhaps we just scribe paver/ landing stone to be flush with existing threshold..?
▪ Clean-out in front of SW entry door; Cover with bluestone paver..? Maintain access for annual maintenance

West Side of Site ('Abyssinian Way' as declared by Mr. Cummings)
▪ New property corner pins located (roughly 6-8' off building façade); Raises concerns about how to integrate with abutter's property..?
▪ Install 4" perf pipe underdrain to capture roof water falling on west side of building (pitch to street).
▪ Install 15-18" wide drip-strip with Riverstone along length of building
▪ Existing walkway or retaining wall evident at/below grade; May be worth excavating to determine depth and condition..?
▪ Consider installation of short retaining wall (28" hgt.) at back/NW corner to retain grade for new addition..?
▪ Demo/Remove freestanding concrete wall just beyond western property line. Currently a safety hazard, and removal will greatly improve spatial experience (is this a shared expense..?)

Rear (North) Side of Building
▪ Existing retaining wall along Federal Street in extreme disrepair; Consider full replacement
▪ Install new wrought iron fence along top of wall; Allow 24" planting bed between and sidewalk/fence
▪ Board-form, pour, and parge existing retaining wall at NE corner/side of property
▪ Create positive drainage away from structure; Employ underdrains as necessary
▪ Consider simple landscape treatment (meadow grass or monoculture of wildflower) at rear/side yards to eliminate need for weekly mowing

Note: Site Archeologist will need to be present for any excavation

Abyssinian Meeting House

Bluestone Sidewalks: In the second half of the nineteenth century, bluestone, came into use for sidewalks. While the term bluestone refers to sandstones of varying qualities and shades of blue/gray, in New England and New York, it generally refers to a dense sandstone, commonly called North River flagging stone. Produced predominantly in Ulster County, New York with the largest producers centered around Kingston, this stone is a "fine-grained compact sandstone, extremely hard and wearing upon a tool, and is made up of microscopic crystals of the sharpest sand" (Balch. *The Great Bluestone Industry.* 353). The name "North River" derives from the early name of the Hudson River. Commercial quarrying of this stone began between 1826-1838 and grew to become a major industry in the 1850s. By 1890, it was estimated that 20,000 men were employed in the quarrying, tooling, and shipping bluestone from quarries between the Hudson and Delaware Rivers with 7,000 of them employed in Kingston, New York. Stones ranged in size from thinner slabs (2" thick) that were known as "Corporation" flags and were cut to sizes of 4' and 5'. Massive slabs could be as thick as 10" and seem to have commanded premium prices as vanity pieces. One bluestone slab measuring 15' x 20' x 10" (thick) was installed at the main entry of one of the Vanderbilt Mansions constructed in New York City on Fifth Avenue near Fiftieth Street in the 1880s. Prior to 1890 an even larger slab measuring 20' x 24' x 9" was quarried at Sawkill near Kingston, New York and moved to the shipping yard of Osterhoudt Brothers at Wilbur, New York in one piece to preserve its value which would have been reduced by 20% but cutting it *(The Manufacturer and Builder*. April, 1890. 80).
A large area of bluestone flagging (probably North River flagging stone which was recommended by the Mayor of Cambridge) survives on the north side of Brattle Street in Cambridge, Massachusetts, where it was installed in 1887 after considerable local debate about its cost and durability in comparison to brick. The sidewalk is composed of bluestone slabs that are 6 feet in length, 3 to 3-1/2 inches in thickness, and between 2 to 4½ feet in width, laid in a bed of packed sand. (Source: Archipedia New England)



Mid-sized Shrub Options

Hydrangea 'Twist-n-Shout' SUMMER-EARLY FALL BLOOM




Myrica gale (Sweetgale)




Ilex glabra 'Shamrock' (Inkberry)





Low Shrub/Groundcover Options

Rhus aromatic 'Gro-Low' (Dwarf Fragrant Sumac)




Clethra alnifolia '16 Candles' (Summersweet Compacta) AUGUST BLOOM





Nepeta (Catmint) SUMMER BLOOM





Dennstaedattia (Hayscented Fern)





STAFF MEMORANDUM
HISTORIC PRESERVATION PROGRAM
PLANNING AND URBAN DEVELOPMENT

TO: Chair O'Brien and Members of the Historic Preservation Board
FROM: Rob Wiener, Historic Preservation Compliance Coordinator
DATE: September 1, 2023
RE: 106 Pine Street – First WORKSHOP – Add Basement Access Door and Stairs
PROJECT ID: HPBR-002605
MEETING: September 6, 2023

Owner: Diane Dow
Architect: Joe Delaney, Whipple-Callender Architects

A sign announcing the Historic Preservation Board's meeting on 9/6/2023 was posted at the property on 8/25/2023. A legal ad was published in the Portland Press Herald on 8/25/2023 and 8/26/2023, and 41 notices were sent to neighboring property owners within 100 feet of the subject property.

PROJECT SCOPE

Access to the basement of 106 Pine Street is proposed to be added through converting an existing, wide basement window into a double French door with outswing storm doors on the west side of the foundation facing Pine Street. Stairs down to the door well would descend next to the foundation, with an above-grade railing to guard against falls into the well from the side yard. The owner wishes to facilitate the use of the basement for living space and a possible future accessory dwelling unit.

Dimensions:

Overall Height: Bottom of well approximately 3' below grade
Top of door to be near top of foundation, like the existing window.
Footprint: Stairs: 5'-5"
Well: 6'-6"

Material Specifications:

Foundation	"Dry laid" retaining wall system, 1' thick
Siding	Brick foundation
Trim	Match existing painted profiles
Doors	"Ultrex" fiberglass by Marvin, with glass
Railing	Either metal frame with glass panels, or traditional balustrade of fiberglass
Path	Irregular path through plantings, with square stones

SUMMARY OF HISTORIC CONTEXT

Constructed in 1870, this large, three-story Second Empire house was built as a single-family home when the big angled lot at the corner of Pine and Emery Streets was developed. Despite the loss of elaborate cornice brackets, window hoods, and corner boards when vinyl siding was installed prior to the 1990 historic designation, it retains its form and is a contributing property in the West End Historic District. Other changes have included:

- A polygonal porch was added to the rear, western corner, perhaps quite early.
- A curb cut was added off Emery Street to allow a small parking space in the triangular front yard.
- The front stairs were reconstructed in 2004 following a review by Historic Preservation staff.
- It is assumed that the basement window that is proposed to be altered for the new door was widened at some point in the past, as it is not a conventional window like the other basement openings.

Diane Dow has owned the property since 2020, and it is currently a two-family dwelling.

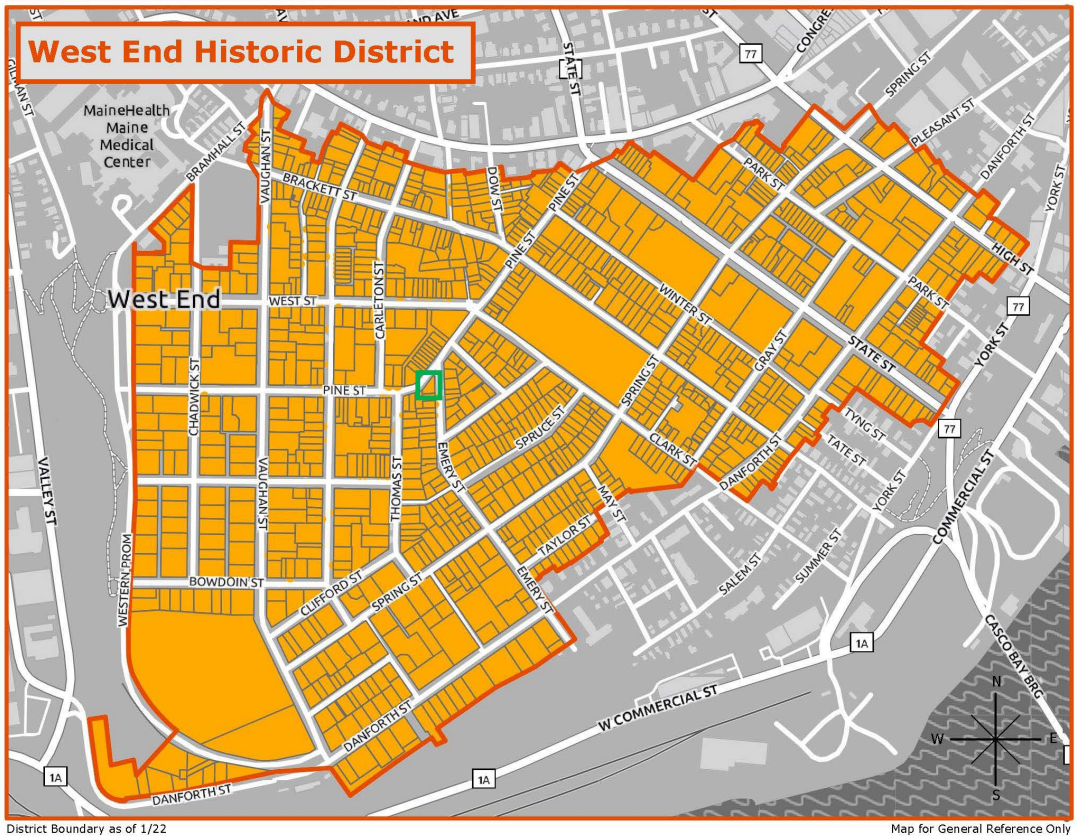

Figure 1: Map of West End Historic District showing location of 106 Pine Street

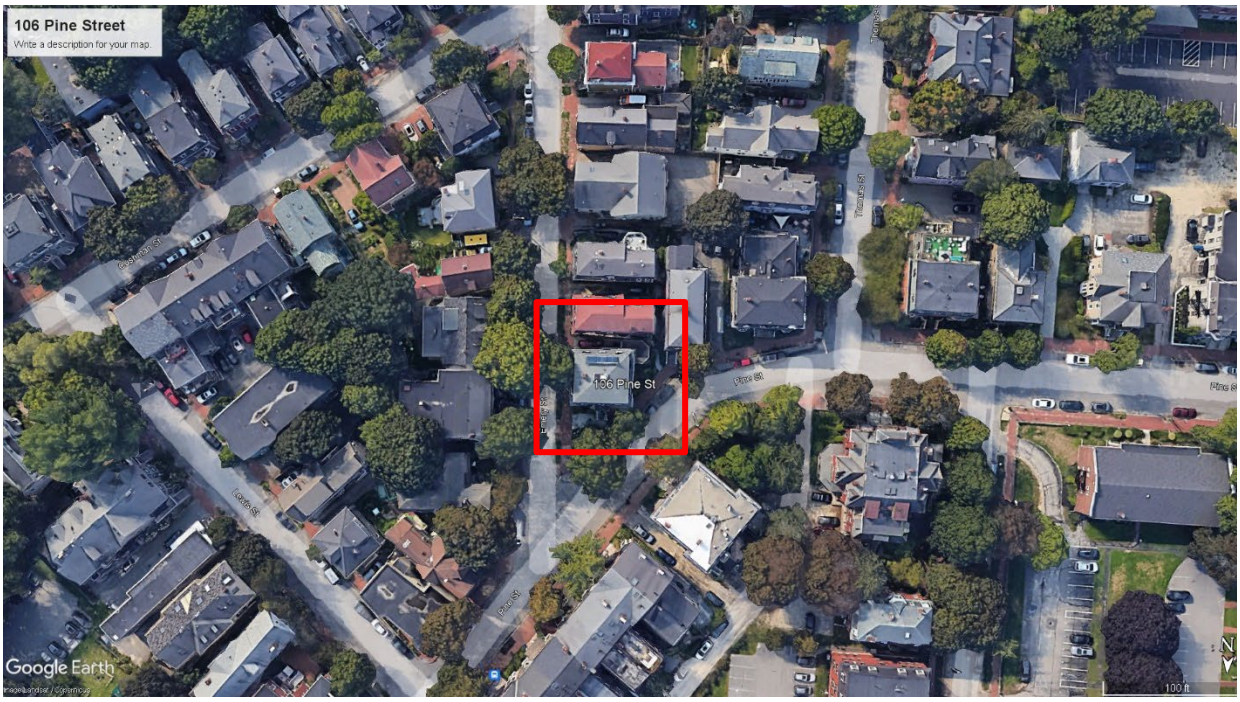

Figure 2: 106 Pine Street (Google satellite view)

PROPOSED ALTERATIONS

Please see project architect Joe Delaney's project description in his cover letter, and his drawings (Attachments 1 and 2.)

STAFF COMMENTS

As Mr. Delaney mentions in his cover letter, several conversations and site meetings with HP staff have explored both the possibility of a basement entrance off the Emery Street driveway, (south side of the house,) and the proposed window conversion and stairwell on the west side. The latter proposal is before the Board for September 6, as the spatial constraints of the former option proved too daunting and detrimental to existing off-street parking.

Given that a wide window opening already exists in the chosen location, the new foundation opening will be extended down but is not expected to be widened. The stairs will be below existing grade, and the most visible element of the project is likely to be the railing around the well. Mr. Delaney has sketched two options:

- A traditional balustrade, possibly of fiberglass
- A metal frame infilled with glass panels

It may be worth exploring other options for a lightweight guardrail – perhaps dark-colored steel would make possible a fairly thin, unobtrusive balustrade.

This project involves a location that is quite exposed to views from Pine Street, yet as noted above, the railing would be the most apparent clue that a stairwell has been added. Staff is fairly

confident that a restrained approach to the design and finishing of the alterations can result in an addition that enhances the utility of the property and meets the Standards for Review of Alterations to Historic Buildings.

ANALYSIS OF APPLICABLE REVIEW STANDARDS

Standards for Review of Alterations, 17.8.2:

Standard 1	
Every reasonable effort shall be made to provide a compatible use for a property which requires minimal alteration to the character defining features of the structure, object, or site and its environment or to use a property for its originally intended purpose.	
Standard Met?	**Staff Comments**
Yes	The facilitation of basement access for improved living space, though visible, will not result in changes to character defining features

Standard 2	
The distinguishing original qualities or character of a structure, object, or site and its environment shall not be destroyed. The removal or alteration of any historic material or distinctive architectural features should be avoided when possible.	
Standard Met?	**Staff Comments**
Yes	It appears the window in question has already been altered from its original width.

Standard 3	
All sites, structures, and objects shall be recognized as products of their own time, place, and use. Alterations that have no historical basis or create a false sense of historical development, such as adding conjectural features or elements from other properties, shall be discouraged.	
Standard Met?	**Staff Comments**
Yes – railing discussion recommended	Door and railing should be simple, and imitative of historic features.

Standard 4	
Changes which may have taken place in the course of time are evidence of the history and development of a structure, object, or site and its environment. Changes that have acquired significance in their own right shall not be destroyed.	
Standard Met?	**Staff Comments**
Yes	Staff does not believe the existing window has architectural significance.

Standard 5	
Distinctive features, finishes, and construction techniques or examples of skilled craftsmanship which characterize a structure, object, or site shall be treated with sensitivity.	
Standard Met?	Staff Comments
Yes	Foundation materials will have to be treated with sensitivity

Standard 6	
Deteriorated historic features shall be repaired rather than replaced wherever feasible. Where the severity of deterioration requires replacement of a distinctive feature, the new feature should match the feature being replaced in composition, design, texture, and other visual qualities and, where possible, materials. Repair or replacement of missing historic features should be based on accurate duplications of features, substantiated by documentary, physical, or pictorial evidence rather than on conjectural designs or the availability of different architectural elements from other structures or objects.	
Standard Met?	Staff Comments
Yes	See above for foundation alterations.

Standard 7	
The surface cleaning of structures and objects, if appropriate, shall be undertaken with the gentlest means possible. Chemical or physical treatments, such as sandblasting, that cause damage to historic materials shall not be undertaken.	
Standard Met?	Staff Comments
Yes	Masonry work should be reviewed by HP staff for compatibility of materials and methods.

Standard 9	
Contemporary design for alterations and additions to existing properties shall not be discouraged when such alterations and additions do not destroy significant cultural, historical, architectural, or archaeological materials that characterize the property. The new work shall be differentiated from the old and shall be compatible with the size, scale, color, material, and character of the property, neighborhood or environment.	
Standard Met?	Staff Comments
Yes	

Standard 10	
Wherever possible, new additions or alterations to structures and objects shall be undertaken in such a manner that, if such additions or alterations were to be removed in the future, the essential form and integrity of the historic property would be unimpaired.	
Standard Met?	Staff Comments
Yes	

ATTACHMENTS

1. Architect's project description
2. Drawings
3. Architect's photos
4. Product information – Marvin doors
5. 1924 photos

City of Portland Maine
c/o Historic District Review Committee
389 Congress St.
Portland, Maine 04101

Re: Project Narrative for Minor Board Review of exterior improvements to 106 Pine St.

Diane Dow has owned the property at 106 Pine Street for several years now. Previous permits for the property included legalization of a third floor apartment as well as bathroom and kitchen improvements for that unit. Having improved the third floor as an apartment, the owner wishes to utilize the existing basement level and create living space for family occupation with the option of an ADU. Please refer to submitted documentation for exterior photos, elevation drawings, floor plans, site plan, product info and materials.

Two versions have been presented; one depicting an access to the basement on the southerly driveway side and one at the west elevation.

The driveway option makes more length of driveway even narrower and difficult to utilize and maintain. In this option the location of the existing interior stair forces the proposed new door opening deeper along the south wall. This necessitates more excavation and a structural cast concrete foundation wall. In this case we are thinking that the foundation wall would be capped with stone, the steps are flame finished granite.

We prefer the west elevation option. A more condensed stair and landing could be built as a landscaped feature with a "dry laid" retaining wall and granite steps. We would use the existing window width as the 5' wide double door opening. A new railing will require balusters due to the depth of the stair well and the attached sketch suggests options. The bottom landing will be crushed stone for drainage. Handrail options are shown on the attached detail sheet.

The proposed walk to the stairs will be regular edged stone arranged as an irregular path through plantings. The stone is square in shape and flame finished.

The proposed door is a clad Marvin "Elevate" inswing two leaf door unit with traditional mullion profile package. We are considering a storm door as well.

There is no proposed exterior lighting

END

P.O. Box 1276 PORTLAND, MAINE 04101 PH: 207-775-2696 FAX: 207-775-3631 joe@whipplecallender.com



1 A.1 **EXTERIOR PERSPECTIVE**
NOT TO SCALE



2 A.1 **EXTERIOR PERSPECTIVE**
NOT TO SCALE



3 A.1 **EXTERIOR PERSPECTIVE**
NOT TO SCALE



4 A.1 **EXTERIOR PERSPECTIVE**
NOT TO SCALE



5 A.1 **EXTERIOR PERSPECTIVE**
NOT TO SCALE



6 A.1 **EXTERIOR PERSPECTIVE**
NOT TO SCALE



7 A.1 **EXTERIOR PERSPECTIVE**
NOT TO SCALE



8 A.1 **INTERIOR PERSPECTIVE**
NOT TO SCALE



9 A.1 **INTERIOR PERSPECTIVE**
NOT TO SCALE

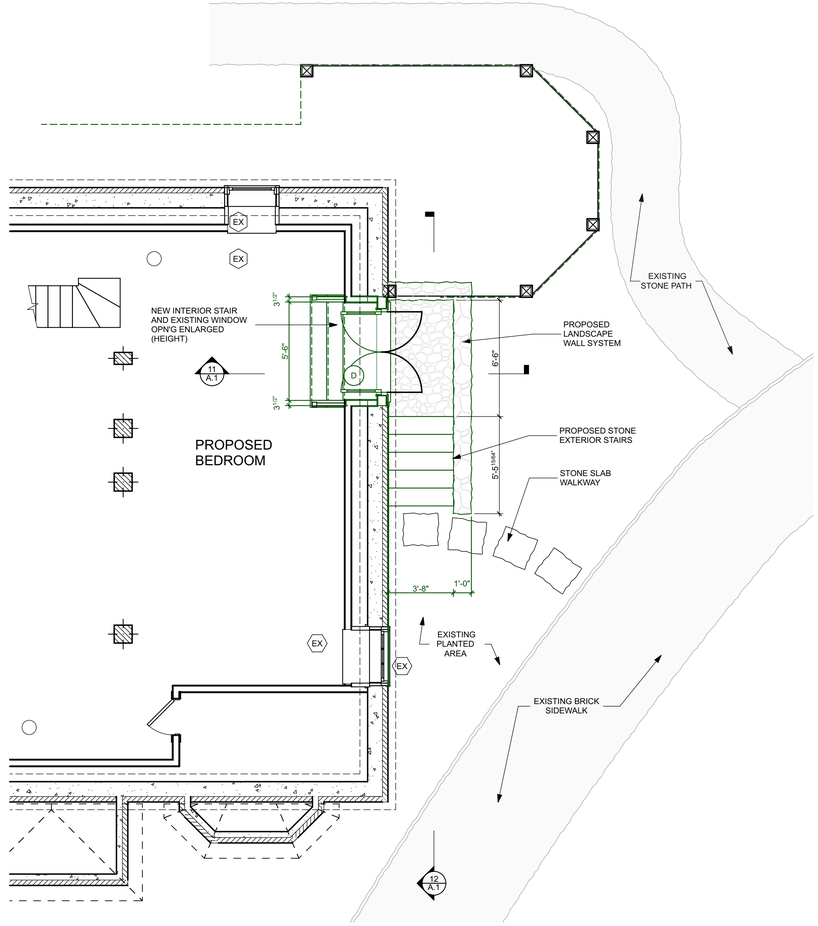

10 A.1 **BASEMENT FLOOR PLAN**
SCALE: 1/4" = 1'-0"

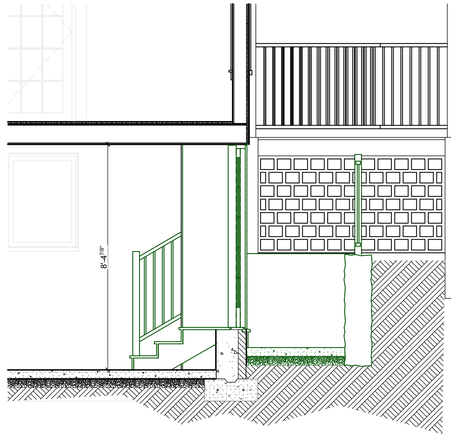

11 A.1 **SECTION THRU PROPOSED DOOR**
SCALE: 3/8" = 1'-0"

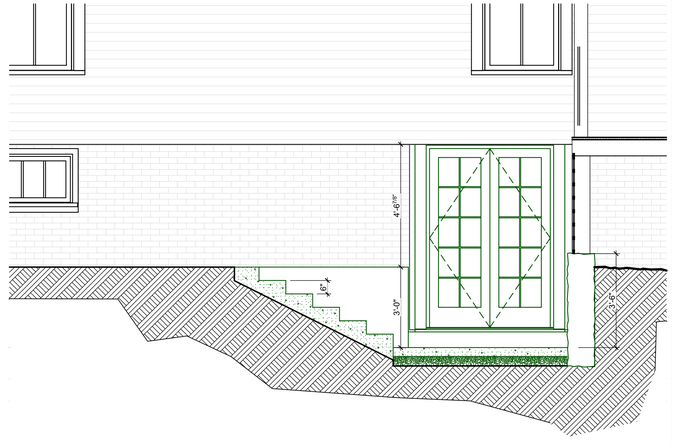

12 A.1 **SECTION THRU EXTERIOR STAIRS**
SCALE: 3/8" = 1'-0"

106 PINE STREET

PORTLAND, ME

106 PINE STREET

WHIPPLE CALLENDER ARCHITECTS

136 PLEASANT AVE.
PORTLAND, ME 04103
P 207.775.2696
F 207.775.3631
www.whipplecallender.com

MARK	DATE	DESCRIPTION

DATE: 7/25/23
CHECKED BY: JAD
DRAWN BY: CLBC
JOB: PIN21
SHEET TITLE: NEW BASEMENT ENTRANCE OPTION 1

A.1

THIS DRAWING IS AN INSTRUMENT OF SERVICE AND SHALL REMAIN THE PROPERTY OF WHIPPLE CALLENDER ARCHITECTS. IT SHALL NOT BE USED FOR ANY OTHER PURPOSE THAT FOR WHICH IT IS SPECIFICALLY FURNISHED

A.1 NEW BASEMENT ENTRANCE OPTION 1 : Plotted on 7/25/23 at 9:57 AM by Joe Delaney. File Path: /Volumes/WCA Share/ WCA Projects/2021 Projects/PIN 106 PINE STREET/PIN ArchiCAD Models/PIN Model 09_29_22 Basement Entrance 1 v26.pln

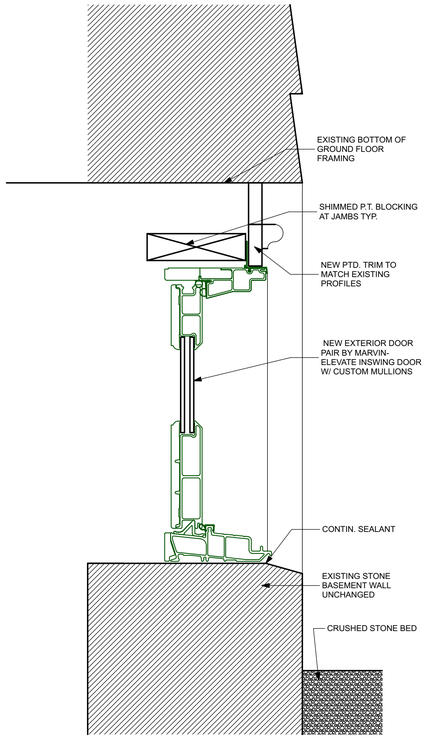

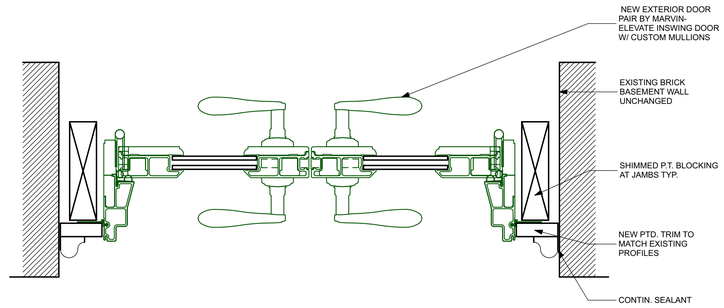

1 A3.2 **PROPOSED DOOR DETAIL**
SCALE: 3" = 1'-0"

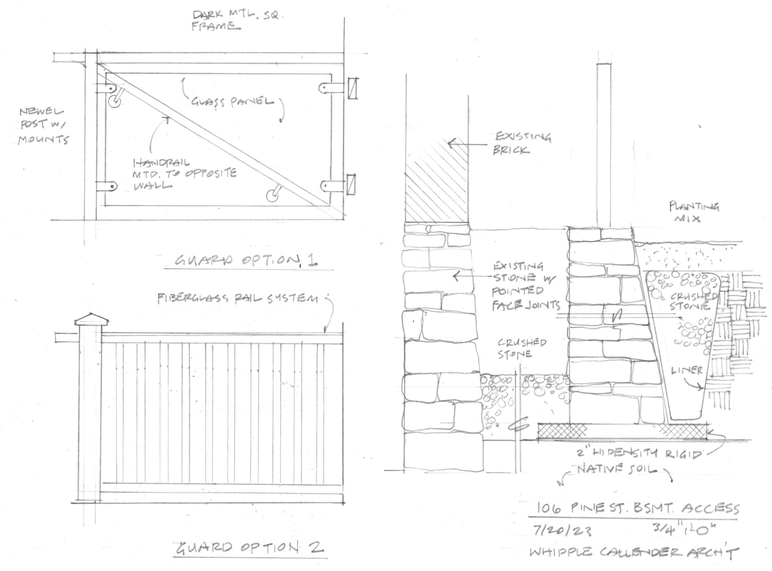

2 A3.2 **DETAIL SCAN**
SCALE: 1/4" = 1'-0"

THIS DRAWING IS AN INSTRUMENT OF SERVICE AND SHALL REMAIN THE PROPERTY OF WHIPPLE CALLENDER ARCHITECTS. IT SHALL NOT BE USED FOR ANY OTHER PURPOSE THAT FOR WHICH IT IS SPECIFICALLY FURNISHED

106 PINE STREET
PORTLAND, ME

106 PINE STREET

WHIPPLE CALLENDER ARCHITECTS
136 PLEASANT AVE.
PORTLAND, ME 04103
P 207.775.2696
F 207.775.3631
www.whipplecallender.com

MARK	DATE	DESCRIPTION
1	5.28.21	BLDG. PERMIT REVIEW CLARIFICATIONS
2	5.30.21	ADDED SMOKE DET. AT EXISTING STAIR
3	7.28.22	APT. EXISTING KITCHEN AND EXISTING BATHROOM RENO. INFO ADDED

DATE: 7/25/23
CHECKED BY: JAD
DRAWN BY: CLBC
JOB: PIN21
SHEET TITLE: DETAILS

A3.2




DEAF
PERSON
NO
PARKING
THIS SIDE
OF STREET



Elevate Inswing French Door

Unit Features 1
Minimum/Maximum Guidelines and Certified Sizes 3
Egress Formula 4
Egress Measurements 5
Conversions 6
Mulling Guidelines 7
Standard Sizes 10
Section Details: Standard - 4 9/16" Jamb - XXR Operator 11
Section Details: Standard - 4 9/16" Jamb - XO Operator 12
Section Details: Standard - 4 9/16" Jamb - X - Operator 13
Section Details: Standard - 4 9/16" Jamb - O - Stationary 14
Section Details: IZ3 - 4 9/16" Jamb - XXR Operator 15
Section Details: IZ3 - 4 9/16" Jamb - XO Operator 16
Section Details: IZ3 - 4 9/16" Jamb - X - Operator 17
Section Details: IZ3 - 4 9/16" Jamb - O - Stationary 18
Section Details: Standard - 6 9/16" Jamb - XXR Operator 19
Section Details: Standard - 6 9/16" Jamb - XO Operator 20
Section Details: Standard - 6 9/16" Jamb - X - Operator 21
Section Details: Standard - 6 9/16" Jamb - O - Stationary 22
Section Details: Direct Glaze Rectangle - 4 9/16" (Standard) 23
Section Details: Direct Glaze Rectangle - 6 9/16" (Standard) 24
Section Details: Direct Glaze Rectangle - 4 9/16" Jamb (IZ3) 25
Section Details: Direct Glaze Rectangle - 6 9/16" Jamb (IZ3) 26
Section Details: Mullions (Standard Mull) 27
Section Details: Mullions (1/2" MRF) 28
Section Details: Divided Lite Options 29
Installation Suggestions: Brick Veneer with Steel Frame Construction 32
Installation Suggestions: Wood Siding with 2x6 Frame Construction 33
Installation Suggestions: Stucco with 2x4 Frame Construction 34

Unit Features

Elevate Inswing French Door: ELIFD

Elevate Inswing French Door IZ3: ELIFD IZ3

For applicable certification and code information, refer to the Introduction and Product Performance chapter.

Frame and Sash:

- The frame and sash exteriors are made of Ultrex®, an advanced fiberglass reinforced pultrusion material that is resistant to thermal conductance.
- Exterior colors: Stone White, Pebble Gray, Bronze, Cashmere, Gunmetal, or Ebony. Frame and sash color may be selected independently.
- The interior is non finger-jointed pine, kiln-dried to a moisture content 6-12% at time of fabrication. Water repellent, preservative treated. Interior wood is available as Pine bare wood or factory-applied white, clear, and designer black interior finishes.Frame and sash color may be selected independently.

Frame:

- Frame thickness is 1 5/16" (33). Frame width of 4 9/16" (116). The sill is Ultrex with a cellular PVC interior sill liner. 4/4 non finger-jointed pine interior stop is applied to all units. Ultrex is .080" (2) thick.
- 6 9/16" (167) jamb depth available

Panel:

- Composite sash thickness is 1 3/4" (44), stiles and top rails 3 5/8" (92), bottom rail width 6" (152) Ultrex is .110" (3) thick.

Jamb Extension:

- Extension Thickness: 9/16" (14)
- Multiple depths available from 1/8" (3), 1/4"(6), and depths varying between 1/2"(13) and 4"(102) at 1/16" (2) increments
- Maximum jamb depth is 8 9/16" (217).
- 6 13/16" (173) jamb extension - factory-applied
- All other jamb depth options are available shipped loose.
- Material: Bare Pine
- Option: factory applied white, designer black and clear lacquer interior finish

Hardware:

- Multi-point lock, latch, and deadbolt assembly included with each door.
- Handle has a standard deadbolt and a top and bottom shoot bolts operated by handle set.
- Handle Sets
  - Handle Set: Interior and exterior selected separately.
  - Standard finish is Almond Frost. Optional White, Bright Brass PVD, Oil Rubbed Bronze PVD, Satin Nickel PVD, and Matte Black finishes.
- Standard locking system strike plate will be stainless steel, with an optional brass strike on "X" doors.
- Hinges contain both a horizontal, vertical adjustment feature, and non-removable pin.
  - Three hinges are used on all units.
  - Hinges will be White, Dark Brown, Pebble Gray, Ebony, Gunmetal, or Cashmere to match the exterior of the frame.
  - Coastal brass, Oil Rubbed Bronze, or coastal satin nickel hinges with brass substrates.
  - Hinge kits are available in Gold, Grey, White, Dark Brown, and Ebony finishes.
- Keyed alike option is available.

Installation:

- Factory applied folding nailing fin and drip cap system.
- Optional installation brackets for masonry available.
- Factory-supplied field mulling kits are available for standard assemblies.
- IZ3 glazed units require installation clips.

Unit Features Continued

Glazing:

- Dual-pane units are manufactured with 3/4" (19) Tempered IG with Low E1, E2, E3, or E3/ERS coatings including argon gas or air fill. Clear (uncoated) glass is available with air fill only. Obscure glass is available as an option.
- The glazing seal is a silicone bedding on both interior and exterior surfaces utilized in a sandwich style sash.
- STC/OITC values are available for 3.1mm glass thickness.
  - Optional 3.1/4/7 STC/OITC upgrade glass is available. See the Product Performance chapter for STC and OITC ratings.
- Decorative Glass options include glue chip, frost, and tinted (bronze, gray or green). Decorative glass is not available with Low E1, Low E3/ERS or STC/OITC Upgrade options.

IZ3 Glazing:

- Optional IZ3 available on selected sizes. IZ3 for winds up to 140 miles per hour.
- Glass is laminated, insulated Low E2 or E3 Argon, consisting of annealed or tempered glass exterior and laminated glass interior.
- The laminated glass is comprised of two pieces of glass with either an SGP or PVB laminate layer between.
- Interior and exterior glazing compound is silicone, in a sandwich style glazing system.

Weather Strip:

- All weather strip is black in color (not including the sill).
- All units are constructed with two weather strip at all jamb/panel perimeter joints.
- Jambs, head jamb, astragal, and mull post utilize a dual bulb type weather strip
- Sill weather strip to seal against the bottom rail, and will be black or beige depending on sill color.

Interior/Exterior Simulated Divided Lites (SDL):

- Interior bar: 7/8" (22) wide bars. Pine bare wood with optional white, clear, or designer black interior finishes.
- Exterior bar: Ultrex, 7/8" (22) wide bars, finish to match exterior.
  - Pattern: Standard rectangular pattern, 6 or 9 lite Prairie cut, 6-lite Prairie cut on rectangle or Cottage style cut.
- Simulated check rail option: 2 11/32" (60).
  - Patterns available: simulated rail in standard center or customer specified location with 7/8" pattern above, below, or both in pattern of rectangular equal lite or Prairie lite cut.
  - IZ3 glazing and tinted glass available without spacer bar only.

Grilles-Between-The-Glass (GBG):

- 23/32" (18) contoured aluminum bar placed between two panes of glass.
- Pattern: Standard rectangular pattern, 6 or 9 lite Prairie cut, or Cottage style cut, or 6-lite Prairie cut on rectangle.
- Exterior color options: Stone White, Pebble Gray, Bronze, Cashmere, Gunmetal, or Ebony.
- Interior Colors: White, Bronze, or Black.
- GBGs are not available on IZ3 glazing or tinted glass.

Exterior Casing:

- Non-integral to the unit.
- Fastened to the exterior wall with barb and kerf 2" (51) brick mould available as a head and jamb surround.
- 3 1/2" (89) flat casing available as a head and jamb surround.
- Also available with 1" (25) ranch style header overhang.

NOTE: NFRC Values are now located on www.marvin.com

Minimum/Maximum Guidelines and Certified Sizes

Operator/Stationary Units								
Unit Type	Frame Size							
	Min Width		Min Height		Max Width		Max Height	
	in	mm	in	mm	in	mm	in	mm
1 - Panel	30 5/16	(770)	79 1/2	(2019)	36 5/16	(922)	95 1/2	(2426)
2 - Panel	59	(1499)	79 1/2	(2019)	71	(1803)	95 1/2	(2426)
ELDG Rectangle	36 5/16	(922)	15 3/4	(400)	71	(1803)	15 3/4	(400)

NOTE: Special sizes are available in 1/64" increments, not to exceed the minimum or maximum listed above.

Product	Air Tested to psf	Water Tested to psf	Design Pressure (DP)	Certification Rating	Max Overall Width		Max Overall Height	
					in	mm	in	mm
Elevate Inswing French Door (OX / XO)	1.57	4.50	30	LC-PG30-SHD	71	(1803)	95.5	(2426)
Elevate Inswing French Door (XX)	1.57	4.50	30	LC-PG30-SHD	71	(1803)	95.5	(2426)
Elevate Inswing French Door (X)	1.57	4.50	30	LC-PG30-SHD	36.319	(923)	95.5	(2426)
Elevate Inswing French Door (O)	1.57	4.50	30	LC-PG30-SHD	36.319	(923)	95.5	(2426)

Product	Air Tested to psf	Water Tested to psf	Design Pressure (DP)	Certification Rating	Max Overall Width		Max Overall Height	
					in	mm	in	mm
Elevate Inswing French Door (OX / XO) HP	1.57	7.50	50	LC-PG50-SHD	71	(1803)	95.5	(2426)
Elevate Inswing French Door (XX) HP	1.57	7.50	50	LC-PG50-SHD	71	(1803)	95.5	(2426)
Elevate Inswing French Door (X) HP	1.57	7.50	50	LC-PG50-SHD	36.319	(923)	95.5	(2426)
Elevate Inswing French Door (O) HP	1.57	7.50	50	LC-PG50-SHD	36.319	(923)	95.5	(2426)

Product	Air Tested to psf	Water Tested to psf	Design Pressure (DP)	Certification Rating	Max Overall Width		Max Overall Height	
					in	mm	in	mm
Elevate Inswing French Door (OX / XO) IZ3	1.57	8.35	+55/-55	LC-PG55-SHD	71	(1803)	95.5	(2426)
Elevate Inswing French Door (XX) IZ3	1.57	8.35	+55/-55	LC-PG55-SHD	71	(1803)	95.5	(2426)
Elevate Inswing French Door (X) IZ3	1.57	8.35	+55/-65	LC-PG55-SHD	36.319	(923)	95.5	(2426)
Elevate Inswing French Door (O) IZ3	1.57	8.35	+55/-65	LC-PG55-SHD	36.319	(923)	95.5	(2426)

Egress Formula

Egress Conversion		
Standard Inswing French Door		
Minimum Value for Net Clear Opening	Desired Dimension	Formula
32"	Egress opening width, in	**1 Panel Door**
		= ELIFD Frame OM - 4.994
		2 Panel Door (XO, OX)
		= (ELIFD Frame Width / 2) - 4.254
		2 Panel Door (XX)
		= ELIFD Frame Width - 6.588
78" (IRC 2012) 80" (IBC 2012)	Egress opening height, in	**X, XX, XO, OX Height**
		= ELIFD Frame Height - 3.755
		X, XX, XO, OX Height (Impact/HP)
		=ELIFD Frame Height - 4.41

Egress Measurements

Net Clear Opening Elevate Inswing French Door			
Width			
Unit Type	**Call Number**	**Net Clear Openings**	
		ft-in	**mm**
1 Panel Operator Standard/HP/IZ3 (X)	2-6	2-1 21/64	(643)
	2-8	2-3 21/64	(694)
	3-0	2-7 21/64	(796)
2 Panel Operator Standard/HP/IZ3 (OX / XO)	5-0	2-1 1/4	(641)
	5-4	2-3 1/4	(692)
	6-0	2-7 1/4	(794)
2 Panel Operator Standard/HP/IZ3 (XX)	5-0	4-4 13/32	(1331)
	5-4	4-8 13/32	(1433)
	6-0	5-4 13/32	(1636)
Height			
Unit Type	**Call Number**	**Net Clear Openings**	
		ft - in	**mm**
1 and 2 Panel Standard X/XX/XO/OX	6-5	6-3 3/4	(1924)
	6-8	6-6 1/4	(1987)
	7-0	6-10 1/4	(2089)
	8-0	7-7 3/4	(2330)
1 and 2 Panel HP/IZ3 X/XX/XO/OX	6-5	6-3 3/32	(1924)
	6-8	6-5 19/32	(1987)
	7-0	6-9 19/32	(2089)
	8-0	7-7 3/32	(2330)

EGRESS MEASUREMENTS

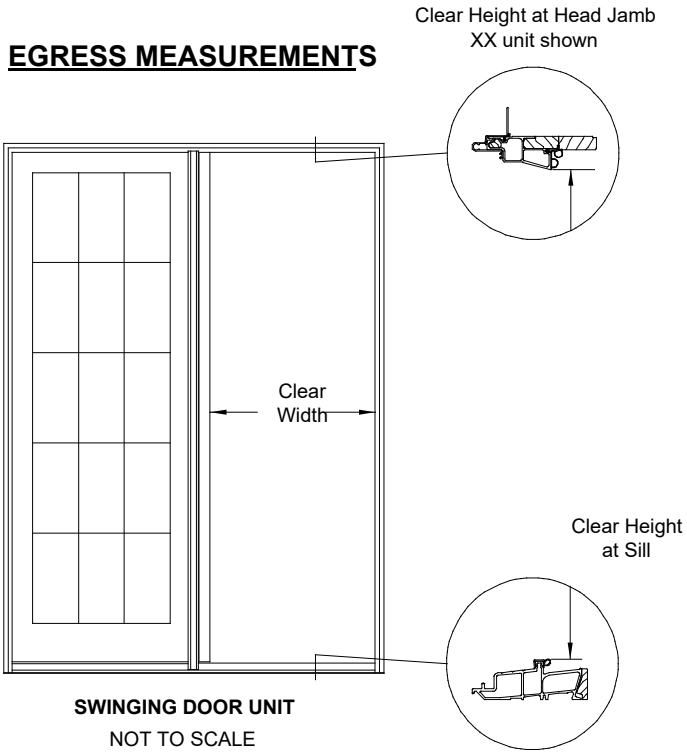

SWINGING DOOR UNIT
NOT TO SCALE

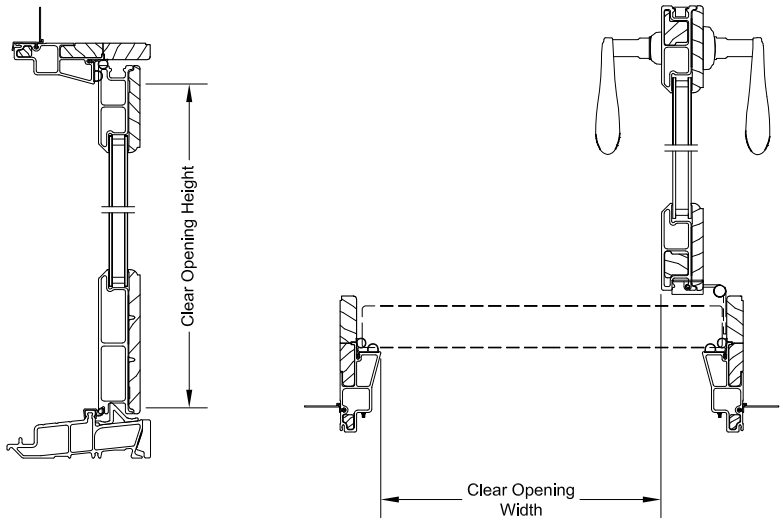

Code restrictions may vary depending on you local building codes. For additional information contact you local cod department for IBC and IRC requirements.

Conversions

Unit Measurements		Width 1 - Panel				Width 2 - Panel		Height	
From	To								
Frame		in	mm			in	mm	in	mm
Masonry Opening	Rough Opening	+ 1/2	(13)			+ 1/2	(13)	+ 1/4	(6)
Masonry Opening w/BMC	Rough Opening	+ 1/2	(13)			+ 1/2	(13)	+ 1/4	(6)
OM of Frame	Rough Opening	+ 1	(25)			+ 1	(25)	+ 1/2	(13)
Daylight Opening	Rough Opening	+ 9 31/32	(253)	×	2	+ 17 5/16	(440)	+ 12 29/32	(328)
Daylight Opening (IZ3/HP)	Rough Opening	+ 9 31/32	(253)	×	2	+ 17 5/16	(440)	+ 13 9/16	(344)
Panel		in	mm			in	mm	in	mm
OM of Frame	OM of Panel	-1 23/32	(44)	÷	2	-29/32	(23)	-2 25/32	(71)
OM of Frame (IZ3/HP)	OM of Panel	-1 23/32	(44)	÷	2	-29/32	(23)	-3 7/16	(87)
Daylight Opening	OM of Panel	+ 7 1/4	(184)			+ 7 1/4	(184)	+ 9 5/8	(244)
Glass		in	mm			in	mm	in	mm
OM of Frame	Glass	-7 23/32	-(196)	÷	2	-6 29/32	-(175)	-11 7/32	-(285)
OM of Frame (HP)	Glass	-7 23/32	-(196)	÷	2	-6 29/32	-(175)	-11 7/8	-(302)
OM of Frame (IZ3)	Glass	-7 27/32	-(199)	÷	2	-7 5/32	-(182)	-11 63/64	-(304)
Daylight Opening (Standard/HP)	Glass	+ 1 1/4	(32)			+ 1 1/4	(32)	+ 1 3/16	(30)
Daylight Opening (IZ3)	Glass	+ 1 1/8	(29)			+ 1 1/8	(29)	+ 1 5/64	(27)
Sliding Screen		in	mm			in	mm	in	mm
OM of Frame	OM of Screen			÷	2	-5/16	(8)	-2 29/64	(62)
Daylight Opening	OM of Screen					+ 7 27/32	(199)	+ 9 61/64	(253)
Daylight Opening (IZ3/HP)	OM of Screen					+ 7 27/32	(199)	+ 10 39/64	(269)
Swinging Screen		in	mm			in	mm	in	mm
OM of Frame	OM of Screen	-1 55/64	(47)	÷	2	-1 3/8	(35)	-2 9/32	(58)
Daylight Opening	OM of Screen	+ 7 7/64	(181)			+ 6 25/32	(172)	+ 10 1/8	(257)
Daylight Opening (IZ3/HP)	OM of Screen	+ 7 7/64	(181)			+ 6 25/32	(172)	+ 10 25/32	(274)

Unit Measurements - ELDG Rectangle		Width		Height	
From	To				
Frame		in	mm	in	mm
Masonry Opening	Rough Opening	+ 1/2	(13)	+ 1/4	(6)
Masonry Opening w/BMC	Rough Opening	+ 1/2	(13)	+ 1/4	(6)
OM of Frame	Rough Opening	+ 1	(25)	+ 1/2	(13)
Daylight Opening	Rough Opening	+ 5 3/8	(137)	+ 4 7/8	(124)
Frame		in	mm	in	mm
Daylight Opening	Frame	+ 4 3/8	(111)	+ 4 3/8	(111)
Glass		in	mm	in	mm
OM of Frame	Glass	-2 13/16	-(71)	-2 13/16	-(71)
Daylight Opening	Glass	+ 1 9/16	(40)	+ 1 9/16	(40)

Mulling Guidelines

Multiple assemblies can be factory mulled

- Assemblies up to 3 units wide by 1 unit high
  - **MAXIMUM ROUGH OPENING** not to exceed 109 15/16" (2792) x 96" (2438)
- Assemblies up to 2 units wide by 2 units high
  - **MAXIMUM ROUGH OPENING** not to exceed 73 5/8" (1870) x 100 1/2" (2552)

NOTE: FIELD MULLING BEYOND 110" X 112" IS NOT RECOMMENDED. MULLING NOT AVAILABLE ON HP OR IZ3 UNITS.

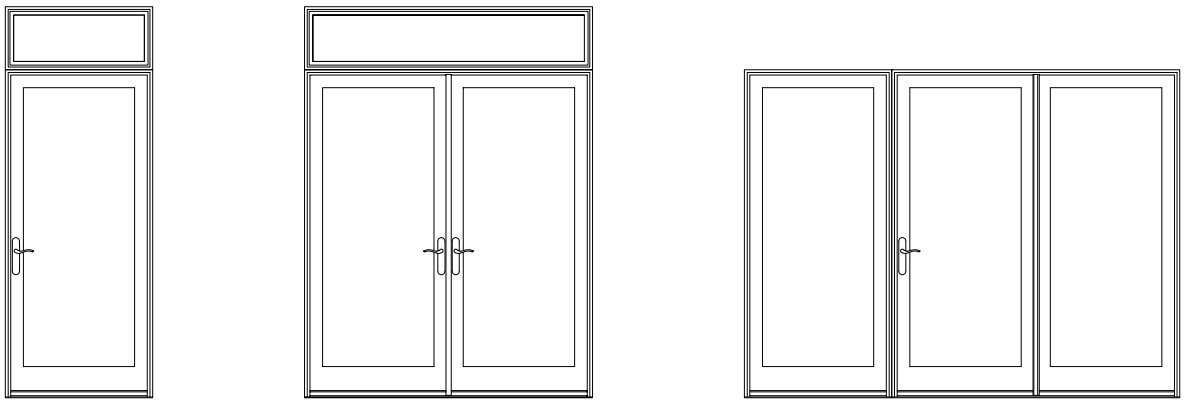

ROUGH OPENING TABLE FOR ASSEMBLIES

WIDTH: Single unit Rough Opening width MINUS 1" = Frame width.

ADD **all** frame widths PLUS 1" = Total Rough Opening width.

HEIGHT: Single unit Rough Opening height MINUS 1/2" = Frame height.

ADD **all** frame heights PLUS 1/2" = Total Rough Opening Height.

Certified Mulling Guidelines

Certified Mull Limits

The Elevate Inswing French Door may be mulled to Direct Glaze Polygon.

- If assemblies have individual units that have a lower design pressure than the mull, the entire assembly is rated at the lower design pressure.
- Mull certification includes 4" mull clip (nail fin installation) or mull brackets (structural bracket installation) at all mull joints.
- Items not included in certified mulls: Stepped mulls, Palladians, Polygon Shapes, Through Jamb and Insert Products, HP or IZ3 units

- Standard mull limits (all factory mulls)
  - Maximum Mulled Assembly RO Size
    - 1 unit wide x 2 units high - 71" (1803) x 50" (1270), Max RO 72" x 100 1/2 (1829 x 2553), DP50
    - 2-3 units wide x 1 unit high - 95 1/2" (2426) x 54 15/32" (1384), Max RO 109 15/16" x 96" (2792 x 2438), DP50

- Tributary Width = (A+B)/2
- Tributary Height = (A+B)/2

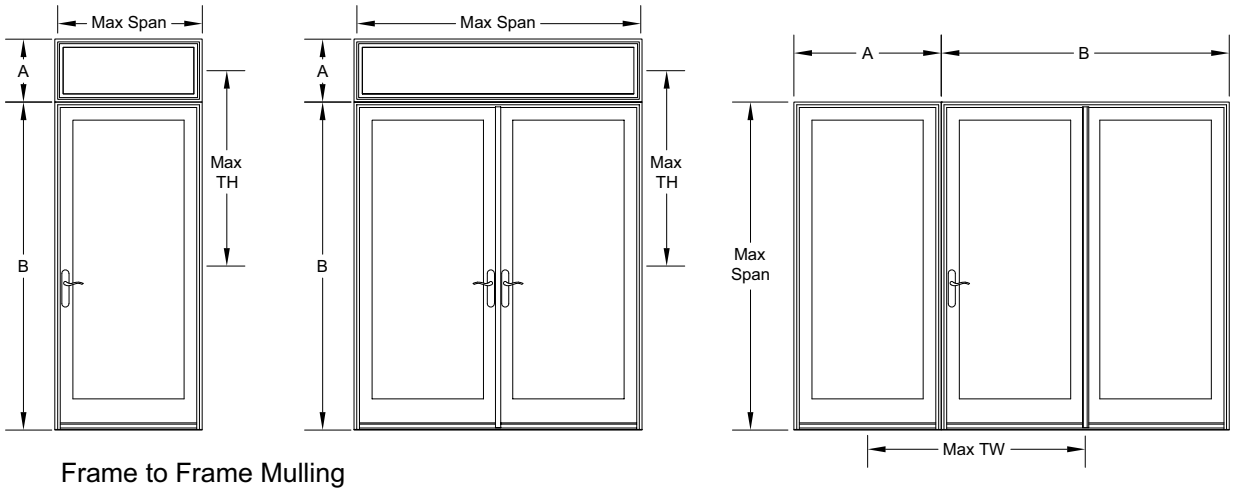

Frame to Frame Mulling

Certified 1/2" MRF Mulling Guidelines

Certified Mull Limits

The Elevate Inswing French Door may be mulled to Direct Glaze Polygon.

- If assemblies have individual units that have a lower design pressure than the mull, the entire assembly is rated at the lower design pressure.
- Mull certification includes 4" mull clip (nail fin installation) or mull brackets (structural bracket installation) at all mull joints.
- Items not included in certified mulls: Stepped mulls, Palladians, Polygon Shapes, Through Jamb and Insert Products, HP or IZ3 units

- 1/2" MRF mull limits (all factory mulls)
  - Maximum Mulled Assembly RO Size
    - 1 unit wide x 2 units high - 71" (1803) x 50" (1270), Max RO 72" x 100 1/2 (1829 x 2553), DP50
    - 2 units wide x 2 units high - 72 5/8" (1845) x 50" (1270), Max RO 73 5/8" x 100 1/2" (1870 x 2553), DP50

- Tributary Width = (A+B+ 1/2)/2
- Tributary Height = (A+B +1/2)/2

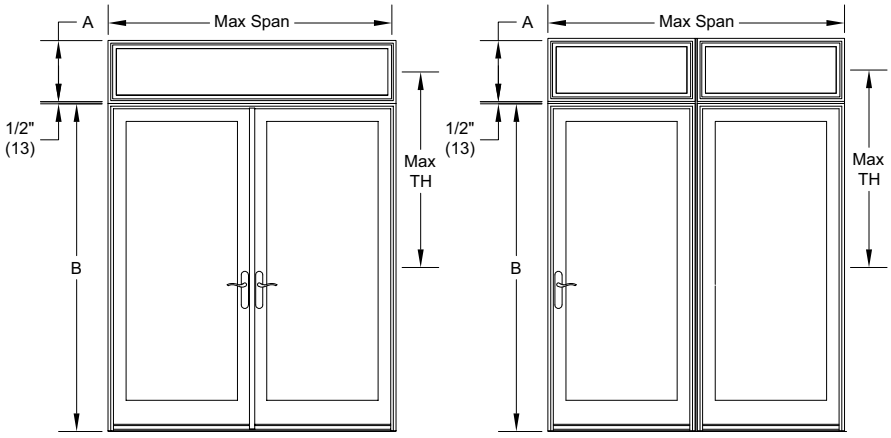

1/2" Mull Reinforcement (MRF) Mulling

Standard Sizes

Standard Inswing Unit Measurements																	
Width																	
Unit Type	**CN**	**Masonry Opening**		**Rough Opening**		**Frame Size**		**Panel OM**		**Screen OM**		**Daylight Opening**		**Glass Size**	
		ft - in	**mm**	**ft - in**	**mm**	**ft - in**	**mm**	**ft-in**	**mm**	**ft-in**	**mm**	**ft - in**	**mm**	**in**	**mm**
1 Panel	2-6	2-6 13/16	(783)	2-7 5/16	(796)	2-6 5/16	(770)	2-4 19/32	(726)	2-4 29/64	(723)	1-9 11/32	(542)	22 19/32	(574)
	2-8	2-8 13/16	(834)	2-9 5/16	(846)	2-8 5/16	(821)	2-6 19/32	(777)	2-6 29/64	(774)	1-11 11/32	(593)	24 19/32	(625)
	3-0	3-0 13/16	(935)	3-1 5/16	(948)	3-0 5/16	(923)	2-10 19/32	(879)	2-10 29/64	(875)	2-3 11/32	(695)	28 19/32	(726)
2 Panel	5-0	4-11 1/2	(1511)	5-0	(1524)	4-11	(1499)	2-4 19/32	(726)	2-5 3/16	(741)	1-9 11/32	(542)	22 19/32	(574)
	5-4	5-3 1/2	(1613)	5-4	(1626)	5-3	(1600)	2-6 19/32	(777)	2-7 3/16	(792)	1-11 11/32	(593)	24 19/32	(625)
	6-0	5-11 1/2	(1816)	6-0	(1829)	5-11	(1803)	2-10 19/32	(879)	2-11 3/16	(894)	2-3 11/32	(695)	28 19/32	(726)
Height																	
Unit Type	**CN**	**Masonry Opening**		**Rough Opening**		**Frame Size**		**Panel OM**		**Screen OM**		**Daylight Opening**		**Glass Size**	
		ft - in	**mm**	**ft - in**	**mm**	**ft - in**	**mm**	**ft-in**	**mm**	**ft-in**	**mm**	**ft - in**	**mm**	**in**	**mm**
All Configurations	6-5	6-7 3/4	(2026)	6-8	(2032)	6-7 1/2	(2019)	6-4 23/32	(1949)	6-5 7/32	(1962)	5-7 3/32	(1704)	68 9/32	(1734)
	6-8	6-10 1/4	(2089)	6-10 1/2	(2096)	6-10	(2083)	6-7 7/32	(2012)	6-7 23/32	(1962)	5-9 19/32	(1768)	70 25/32	(1798)
	7-0	7-2 1/4	(2191)	7-2 1/2	(2197)	7-2	(2184)	6-11 7/32	(2114)	6-11 23/32	(1962)	6-1 19/32	(1869)	74 25/32	(1900)
	8-0	7-11 3/4	(2432)	8-0	(2438)	7-11 1/2	(2426)	7-8 23/32	(2355)	7-9 7/32	(2025)	6-11 3/32	(2111)	84 9/32	(2141)

HP Inswing Unit Measurements																	
Width																	
Unit Type	**CN**	**Masonry Opening**		**Rough Opening**		**Frame Size**		**Panel OM**		**Screen OM**		**Daylight Opening**		**Glass Size**	
		ft - in	**mm**	**ft - in**	**mm**	**ft - in**	**mm**	**ft-in**	**mm**	**ft-in**	**mm**	**ft - in**	**mm**	**in**	**mm**
1 Panel	2-6	2-6 13/16	(783)	2-7 5/16	(796)	2-6 5/16	(770)	2-4 19/32	(726)	2-4 29/64	(723)	1-9 11/32	(542)	22 19/32	(574)
	2-8	2-8 13/16	(834)	2-9 5/16	(846)	2-8 5/16	(821)	2-6 19/32	(777)	2-6 29/64	(774)	1-11 11/32	(593)	24 19/32	(625)
	3-0	3-0 13/16	(935)	3-1 5/16	(948)	3-0 5/16	(923)	2-10 19/32	(879)	2-10 29/64	(875)	2-3 11/32	(695)	28 19/32	(726)
2 Panel	5-0	4-11 1/2	(1511)	5-0	(1524)	4-11	(1499)	2-4 19/32	(726)	2-5 3/16	(741)	1-9 11/32	(542)	22 19/32	(574)
	5-4	5-3 1/2	(1613)	5-4	(1626)	5-3	(1600)	2-6 19/32	(777)	2-7 3/16	(792)	1-11 11/32	(593)	24 19/32	(625)
	6-0	5-11 1/2	(1816)	6-0	(1829)	5-11	(1803)	2-10 19/32	(879)	2-11 3/16	(894)	2-3 11/32	(695)	28 19/32	(726)
Height																	
Unit Type	**CN**	**Masonry Opening**		**Rough Opening**		**Frame Size**		**Panel OM**		**Screen OM**		**Daylight Opening**		**Glass Size**	
		ft - in	**mm**	**ft - in**	**mm**	**ft - in**	**mm**	**ft-in**	**mm**	**ft-in**	**mm**	**ft - in**	**mm**	**in**	**mm**
All Configurations	6-5	6-7 3/4	(2026)	6-8	(2032)	6-7 1/2	(2019)	6-4 1/16	(1932)	6-5 7/32	(1962)	5-6 7/16	(1688)	67 5/8	(1718)
	6-8	6-10 1/4	(2089)	6-10 1/2	(2096)	6-10	(2083)	6-6 9/16	(1996)	6-7 23/32	(2025)	5-8 15/16	(1751)	70 1/8	(1781)
	7-0	7-2 1/4	(2191)	7-2 1/2	(2197)	7-2	(2184)	6-10 9/16	(2097)	6-11 23/32	(2127)	6-0 15/16	(1853)	74 1/8	(1883)
	8-0	7-11 3/4	(2432)	8-0	(2438)	7-11 1/2	(2426)	7-8 1/16	(2338)	7-9 7/32	(2368)	6-10 7/16	(2094)	83 5/8	(2124)

IZ3 Inswing Unit Measurements																	
Width																	
Unit Type	**CN**	**Masonry Opening**		**Rough Opening**		**Frame Size**		**Panel OM**		**Screen OM**		**Daylight Opening**		**Glass Size**	
		ft - in	**mm**	**ft - in**	**mm**	**ft - in**	**mm**	**ft-in**	**mm**	**ft-in**	**mm**	**ft - in**	**mm**	**in**	**mm**
1 Panel	2-6	2-6 13/16	(783)	2-7 5/16	(796)	2-6 5/16	(770)	2-4 19/32	(726)	2-4 29/64	(723)	1-9 11/32	(542)	22 15/32	(571)
	2-8	2-8 13/16	(834)	2-9 5/16	(846)	2-8 5/16	(821)	2-6 19/32	(777)	2-6 29/64	(774)	1-11 11/32	(593)	24 15/32	(622)
	3-0	3-0 13/16	(935)	3-1 5/16	(948)	3-0 5/16	(923)	2-10 19/32	(879)	2-10 29/64	(875)	2-3 11/32	(695)	28 15/32	(723)
2 Panel	5-0	4-11 1/2	(1511)	5-0	(1524)	4-11	(1499)	2-4 19/32	(726)	2-5 3/16	(741)	1-9 11/32	(542)	22 15/32	(571)
	5-4	5-3 1/2	(1613)	5-4	(1626)	5-3	(1600)	2-6 19/32	(777)	2-7 3/16	(792)	1-11 11/32	(593)	24 15/32	(622)
	6-0	5-11 1/2	(1816)	6-0	(1829)	5-11	(1803)	2-10 19/32	(879)	2-11 3/16	(894)	2-3 11/32	(695)	28 15/32	(723)
Height																	
Unit Type	**CN**	**Masonry Opening**		**Rough Opening**		**Frame Size**		**Panel OM**		**Screen OM**		**Daylight Opening**		**Glass Size**	
		ft - in	**mm**	**ft - in**	**mm**	**ft - in**	**mm**	**ft-in**	**mm**	**ft-in**	**mm**	**ft - in**	**mm**	**in**	**mm**
All Configurations	6-5	6-7 3/4	(2026)	6-8	(2032)	6-7 1/2	(2019)	6-4 1/16	(1932)	6-5 7/32	(1962)	5-6 7/16	(1688)	67 33/64	(1715)
	6-8	6-10 1/4	(2089)	6-10 1/2	(2096)	6-10	(2083)	6-6 9/16	(1996)	6-7 23/32	(2025)	5-8 15/16	(1751)	70 1/64	(1778)
	7-0	7-2 1/4	(2191)	7-2 1/2	(2197)	7-2	(2184)	6-10 9/16	(2097)	6-11 23/32	(2127)	6-0 15/16	(1853)	74 1/64	(1880)
	8-0	7-11 3/4	(2432)	8-0	(2438)	7-11 1/2	(2426)	7-8 1/16	(2338)	7-9 7/32	(2368)	6-10 7/16	(2094)	83 33/64	(2121)

Section Details: Standard - 4 9/16" Jamb - XXR Operator

Scale: 3" = 1' 0"

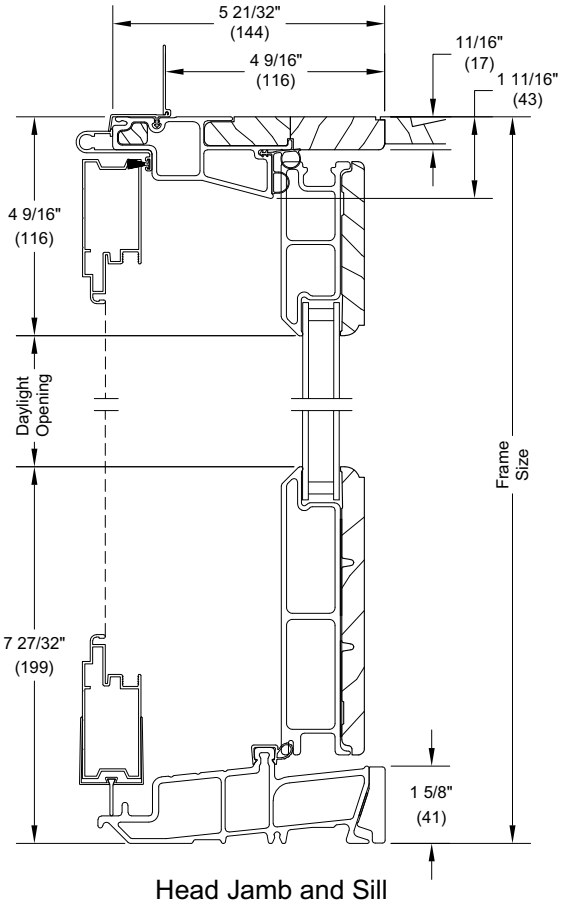

Head Jamb and Sill

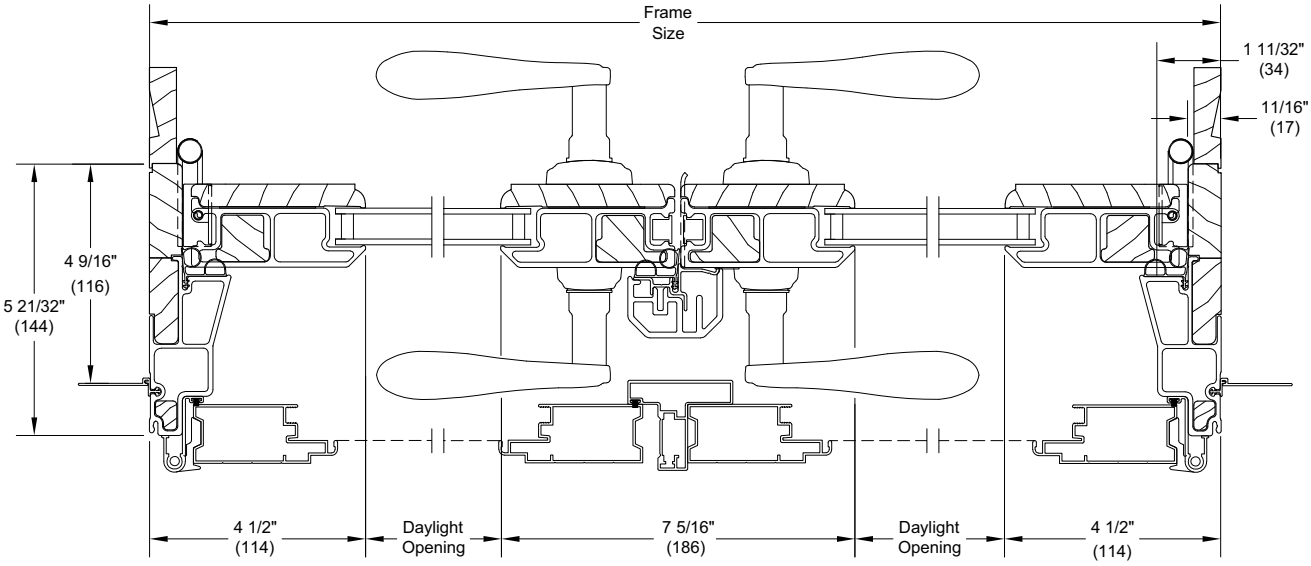

2 Panel Jamb - XX L

Section Details: Standard - 4 9/16" Jamb - XO Operator

Scale: 3" = 1' 0"

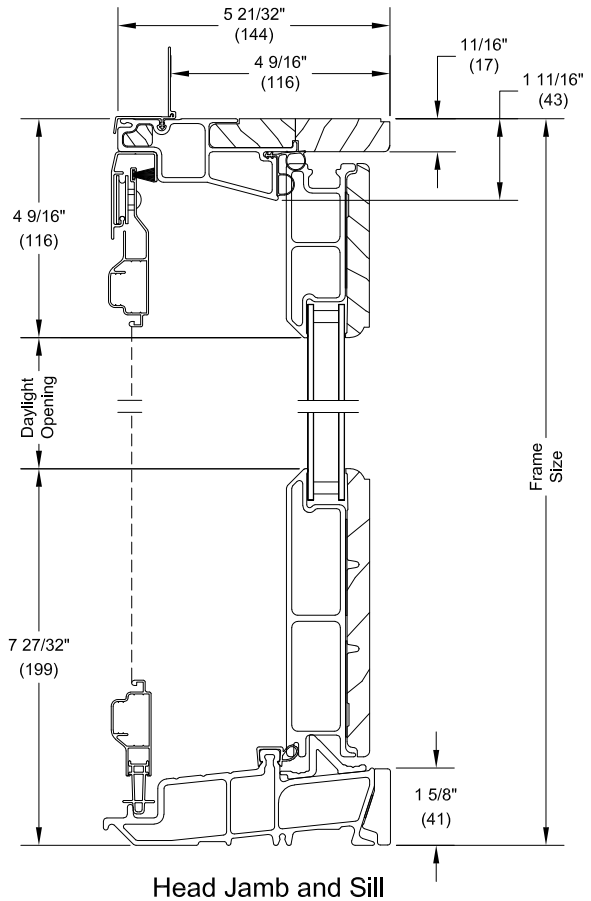

Head Jamb and Sill

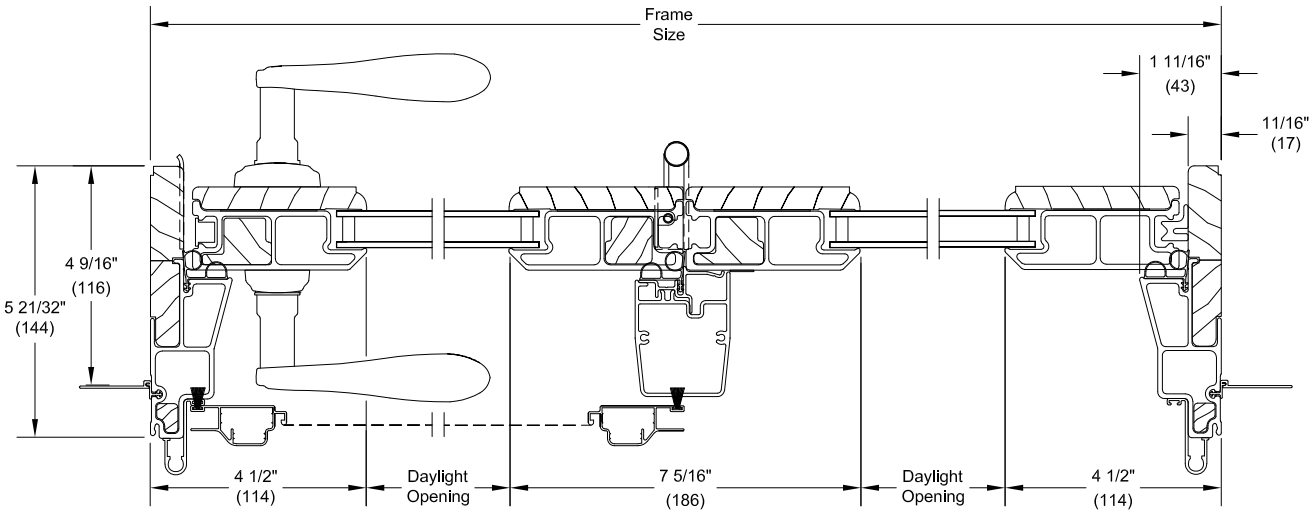

2 PANEL JAMB - XO

Section Details: Standard - 4 9/16" Jamb - X - Operator

Scale: 3" = 1' 0"

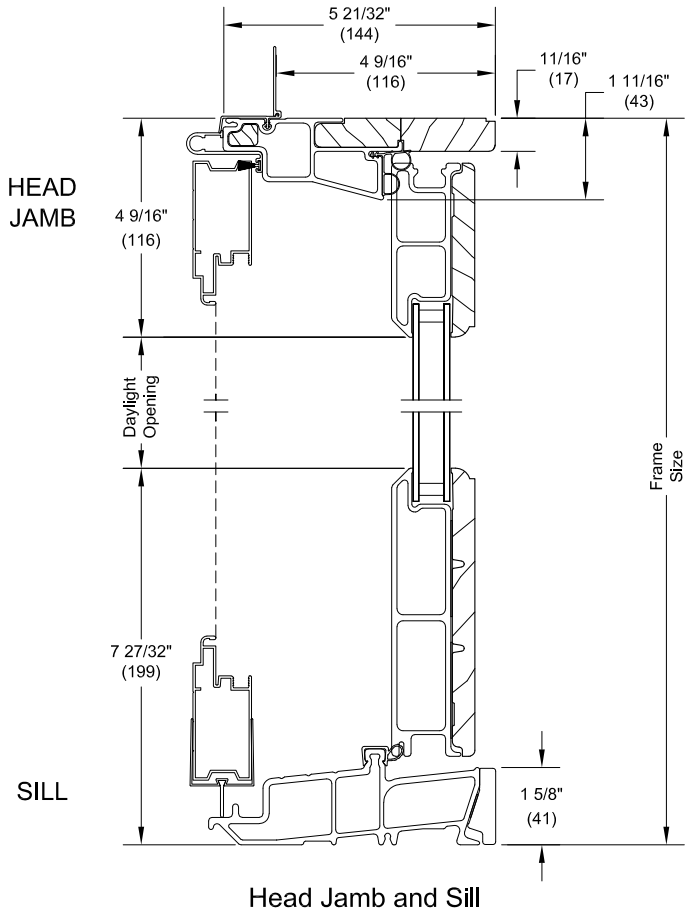

Head Jamb and Sill

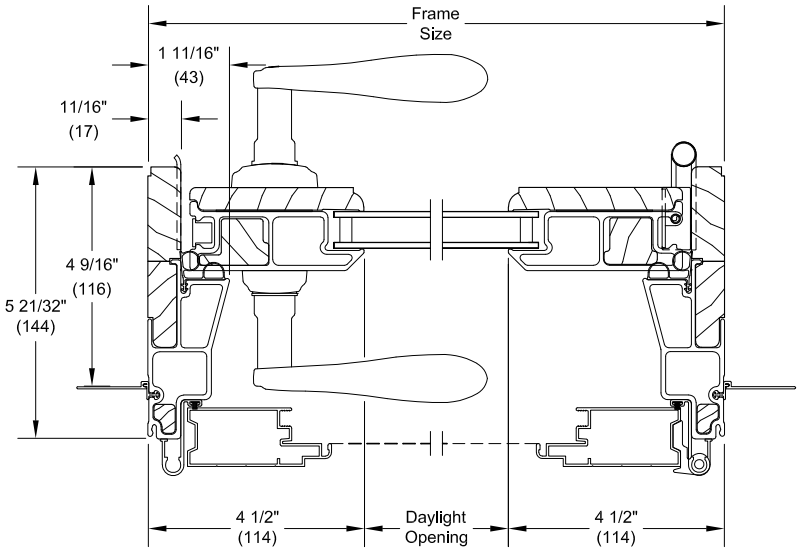

Jambs

Section Details: Standard - 4 9/16" Jamb - O - Stationary

Scale: 3" = 1' 0"

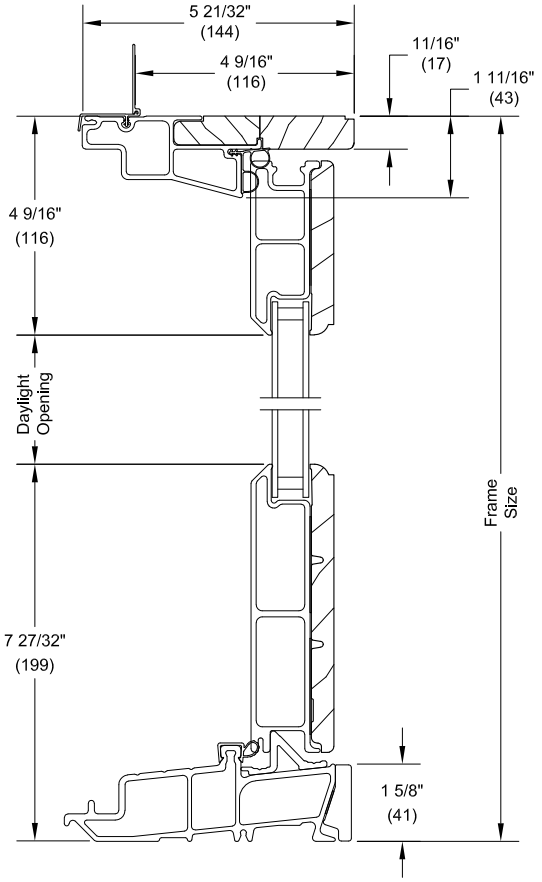

Head Jamb and Sill

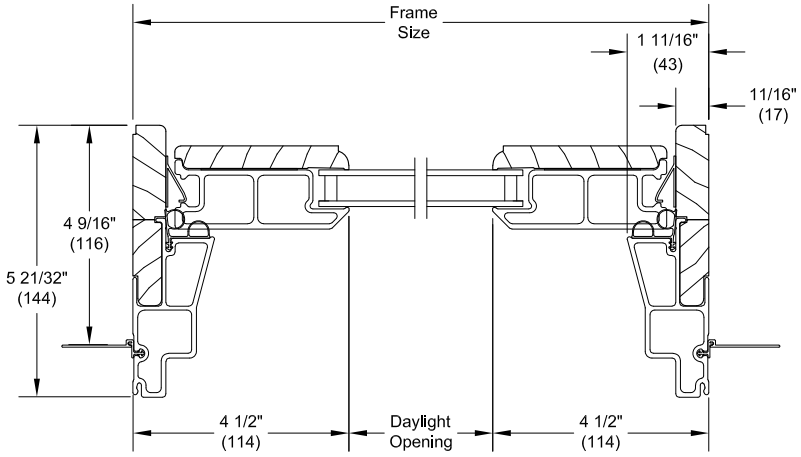

O Jamb

Section Details: IZ3 - 4 9/16" Jamb - XXR Operator

Scale: 3" = 1' 0"

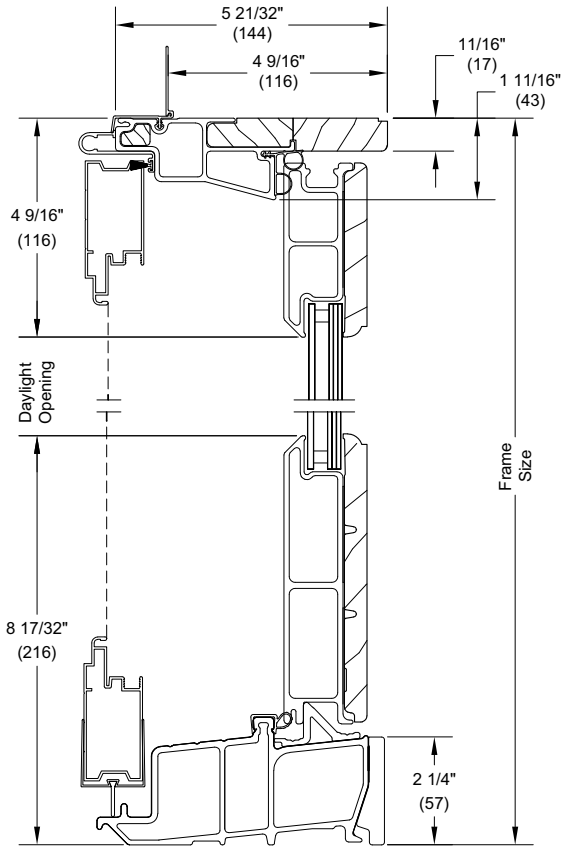

Head Jamb and Sill

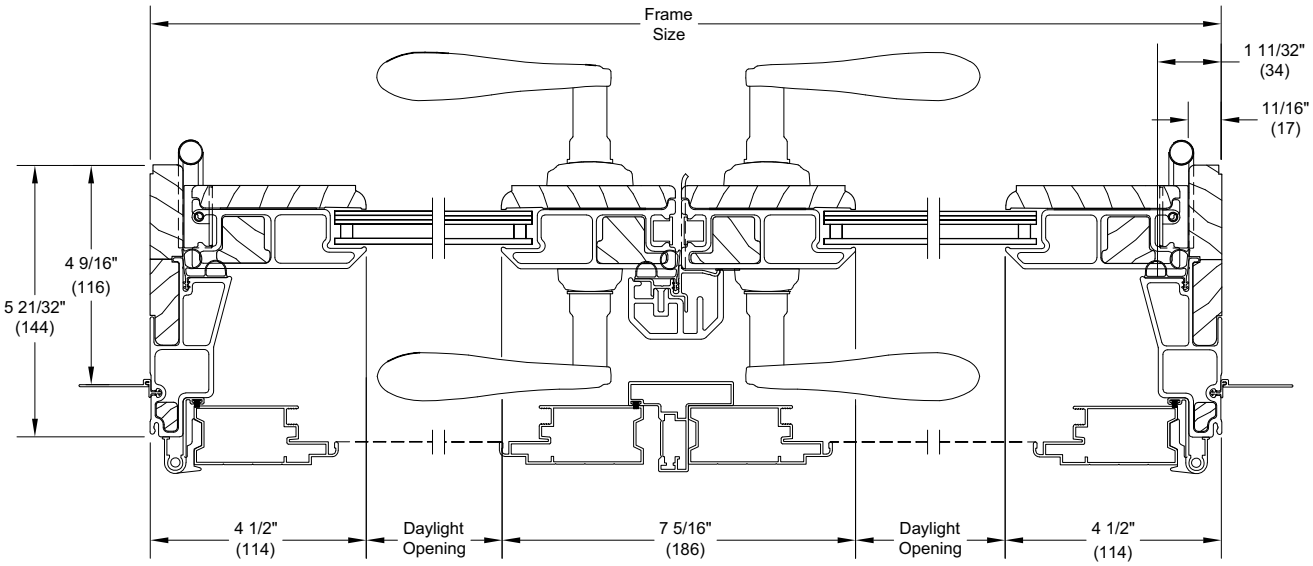

2 Panel Jamb - XX R

Section Details: IZ3 - 4 9/16" Jamb - XO Operator

Scale: 3" = 1' 0"

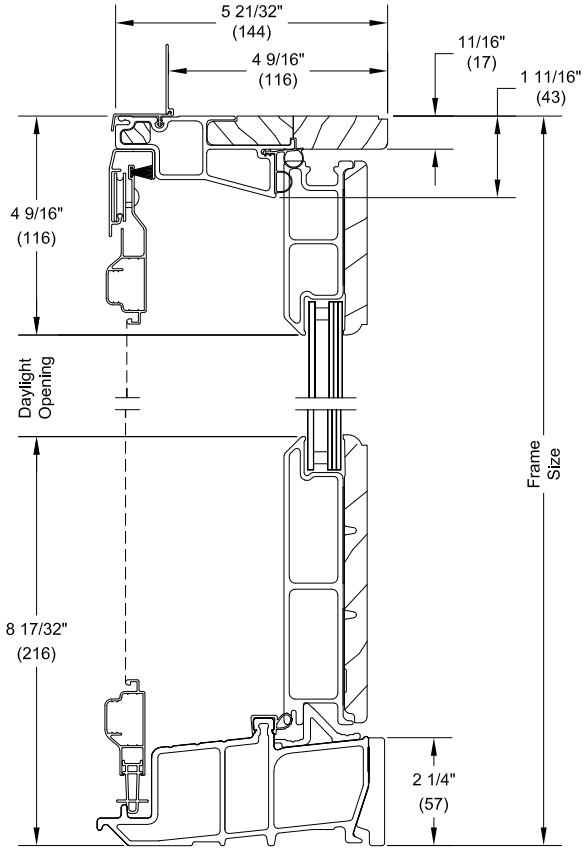

Head Jamb and Sill

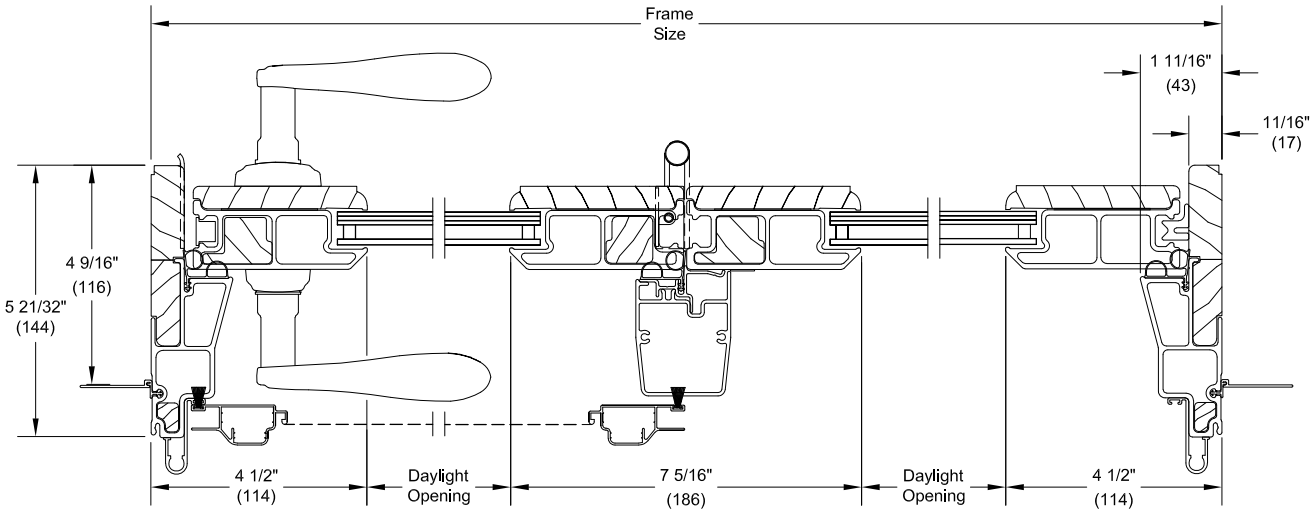

2 PANEL JAMB - XO

Section Details: IZ3 - 4 9/16" Jamb - X - Operator

Scale: 3" = 1' 0"

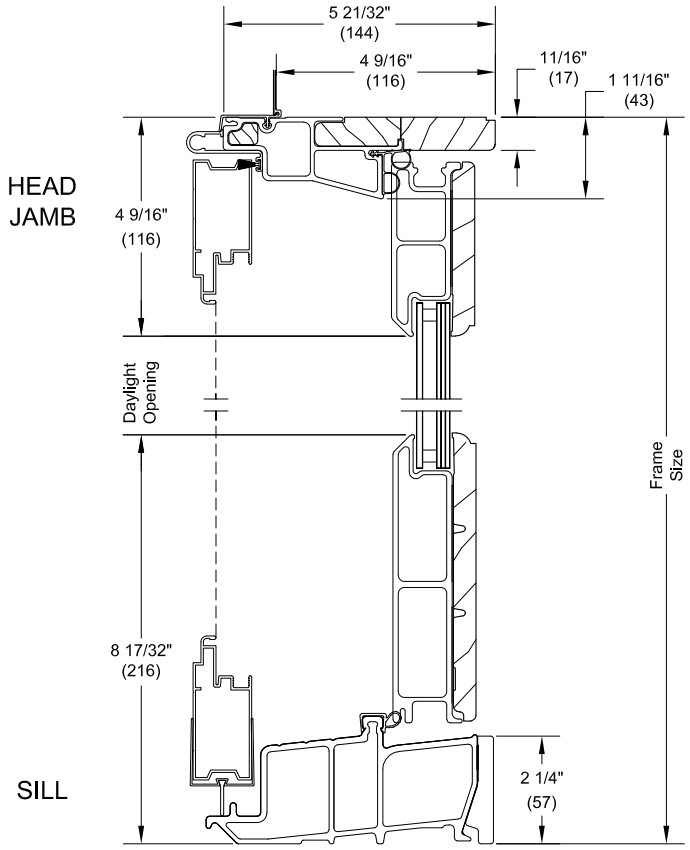

Head Jamb and Sill

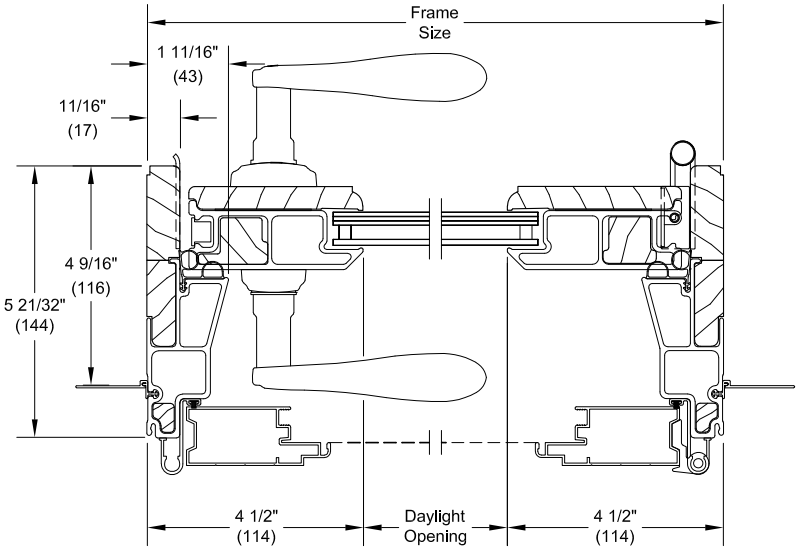

Jambs

Section Details: IZ3 - 4 9/16" Jamb - O - Stationary

Scale: 3" = 1' 0"

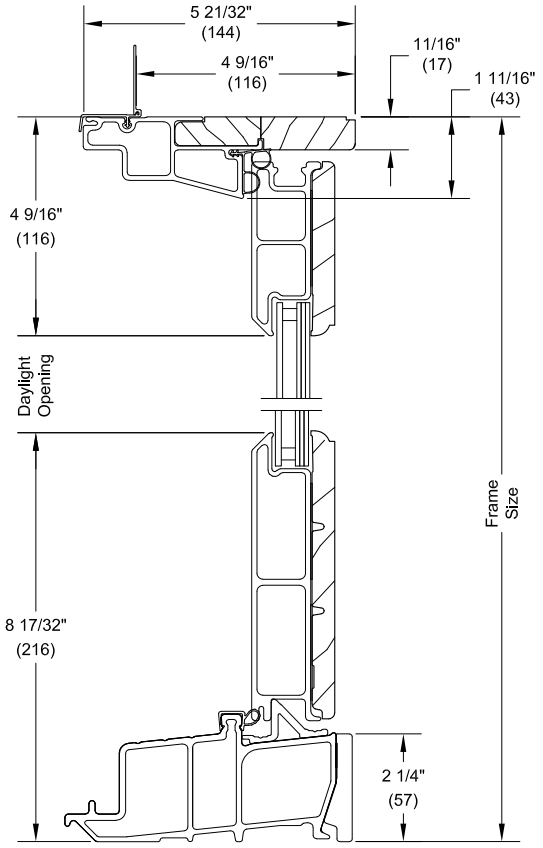

Head Jamb and Sill

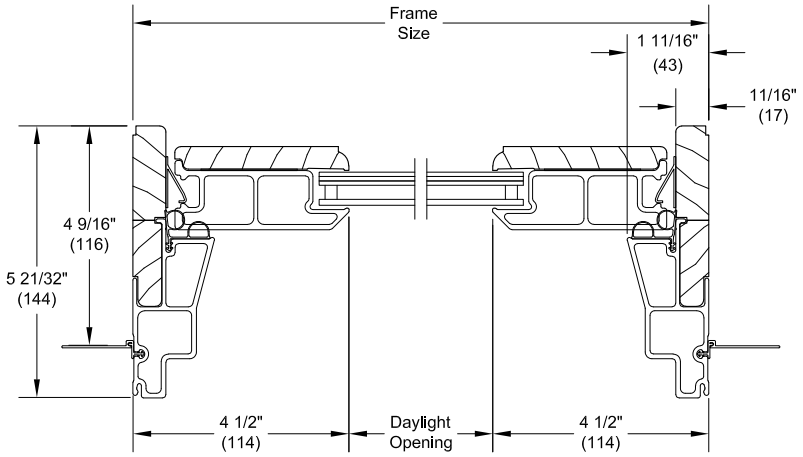

O Jamb

Section Details: Standard - 6 9/16" Jamb - XXR Operator

Scale: 3" = 1' 0"

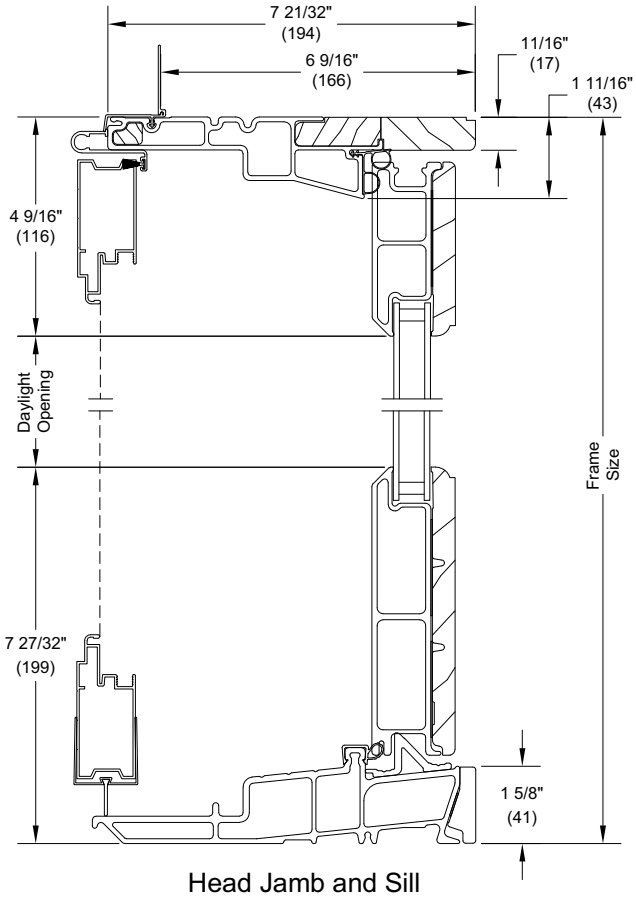

Head Jamb and Sill

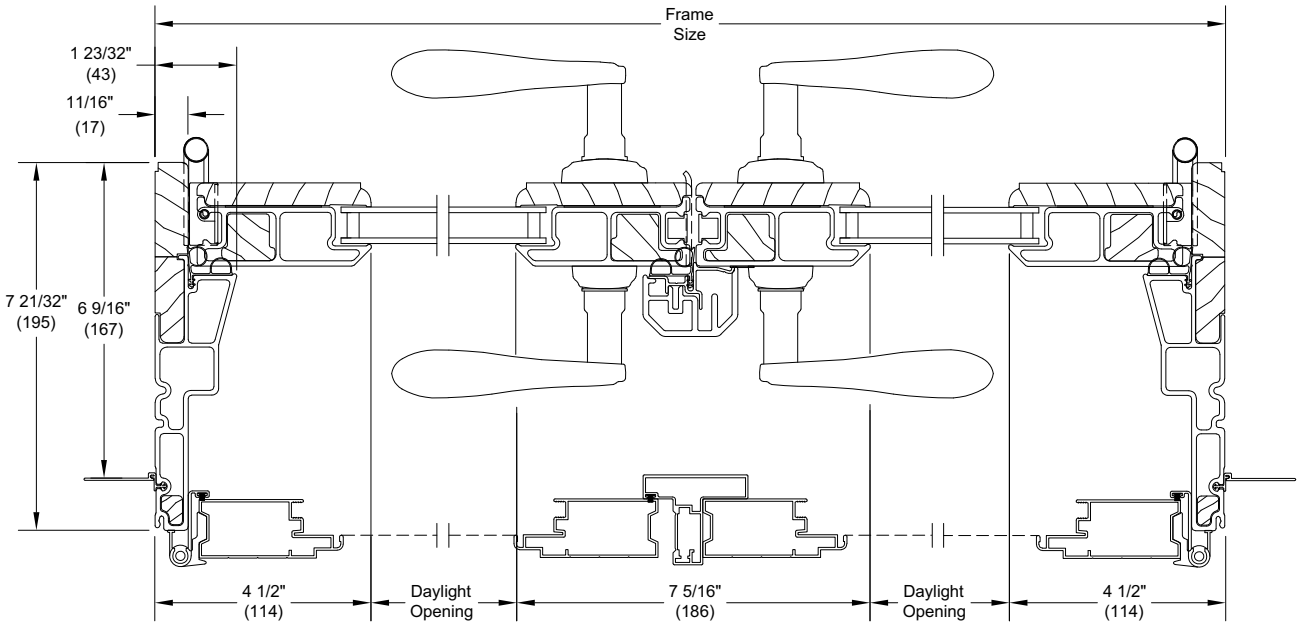

2 Panel Jamb - XX R

Section Details: Standard - 6 9/16" Jamb - XO Operator

Scale: 3" = 1' 0"

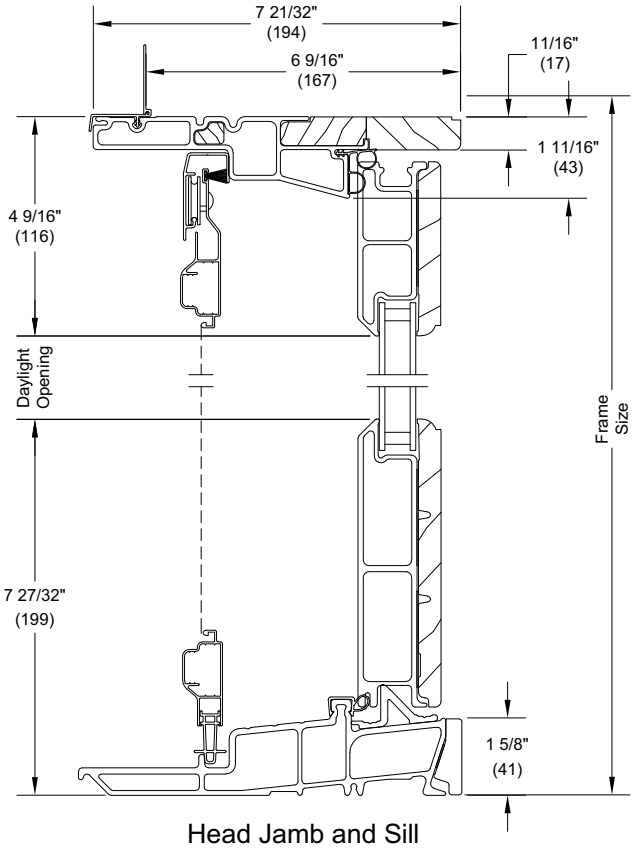

Head Jamb and Sill

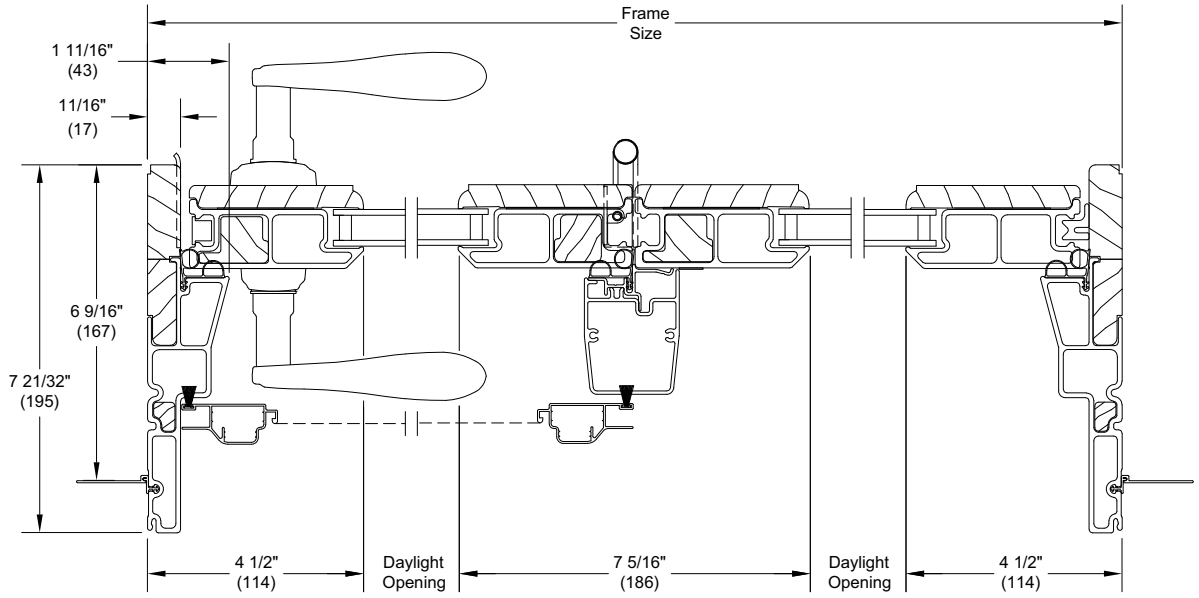

Jambs

Section Details: Standard - 6 9/16" Jamb - X - Operator

Scale: 3" = 1' 0"

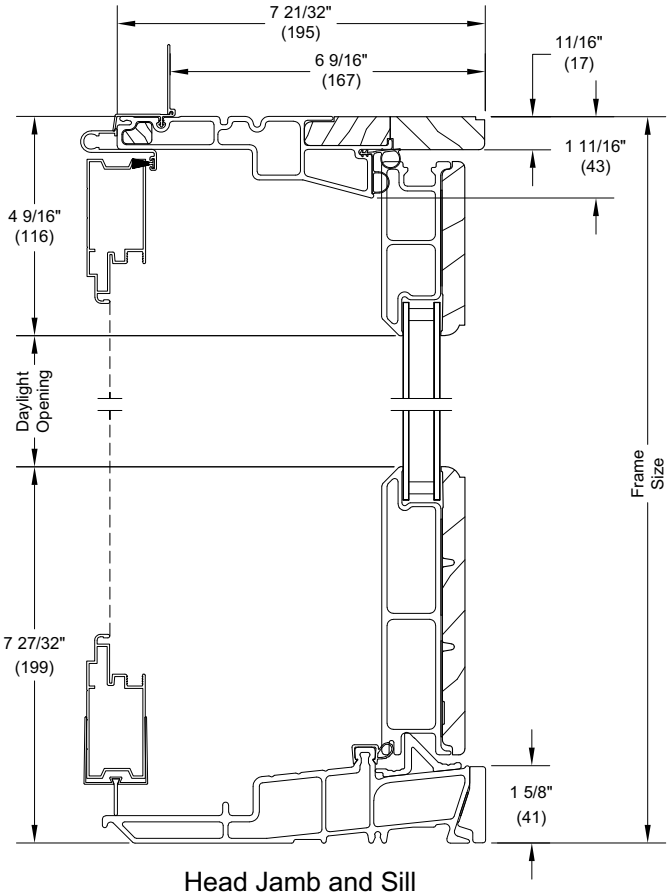

Head Jamb and Sill

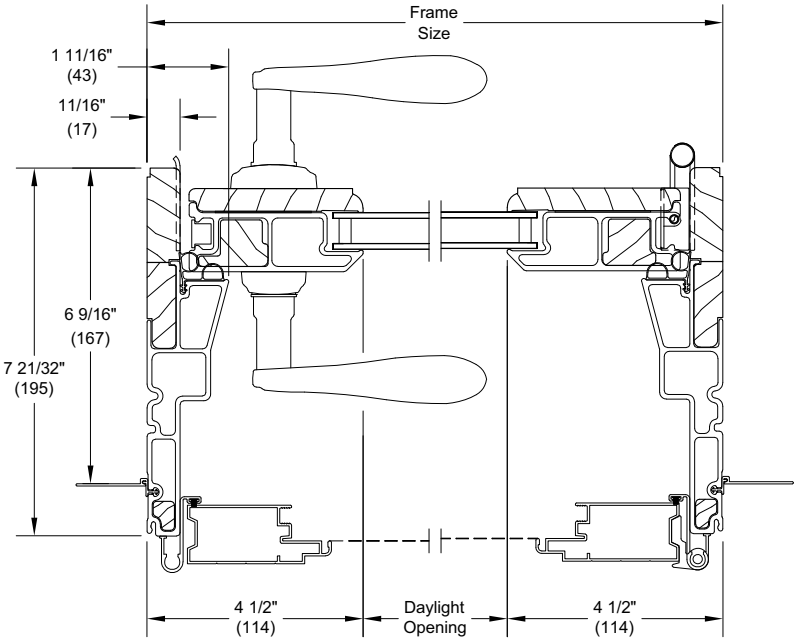

Jambs

Section Details: Standard - 6 9/16" Jamb - O - Stationary

Scale: 3" = 1' 0"

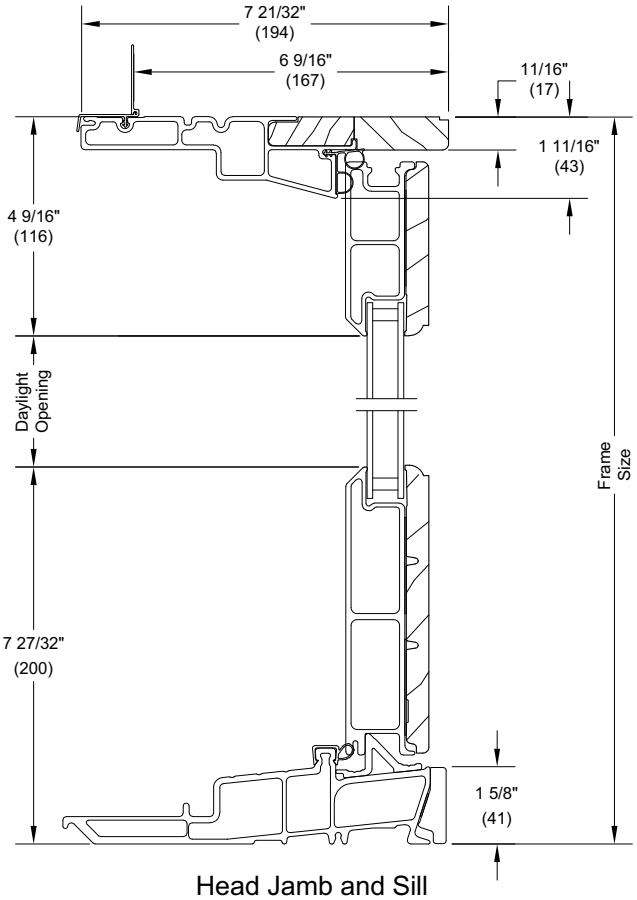

Head Jamb and Sill

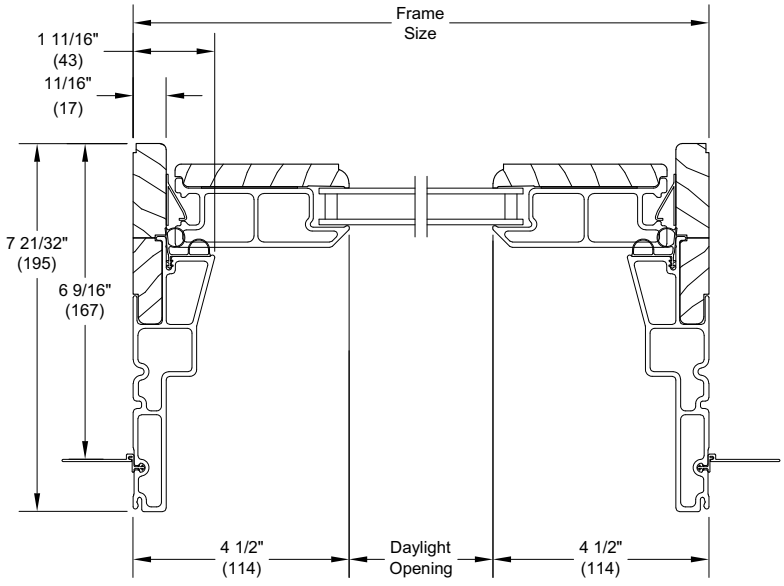

O Jamb

Section Details: Direct Glaze Rectangle - 4 9/16" (Standard)

Scale: 3" = 1' 0"

Head
Jamb

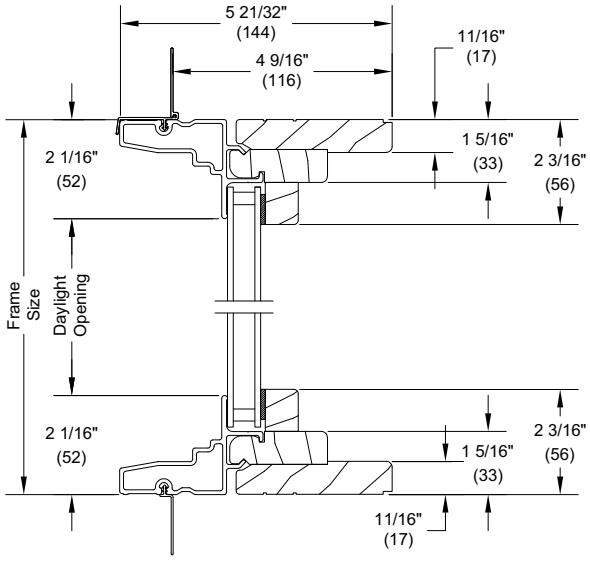

Jamb

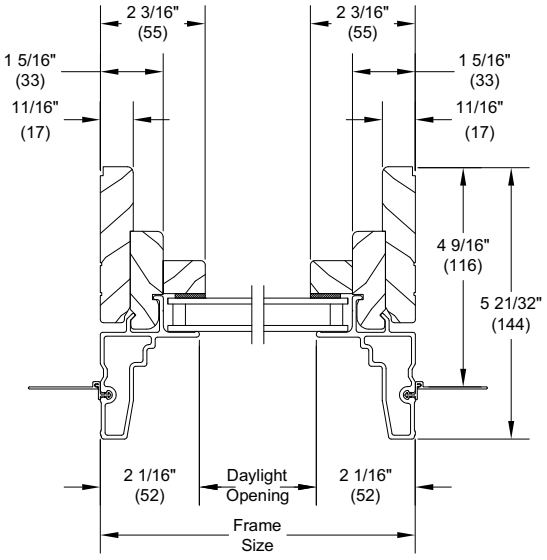

Section Details: Direct Glaze Rectangle - 6 9/16" (Standard)

Scale: 3" = 1' 0"

Head
Jamb

Sill

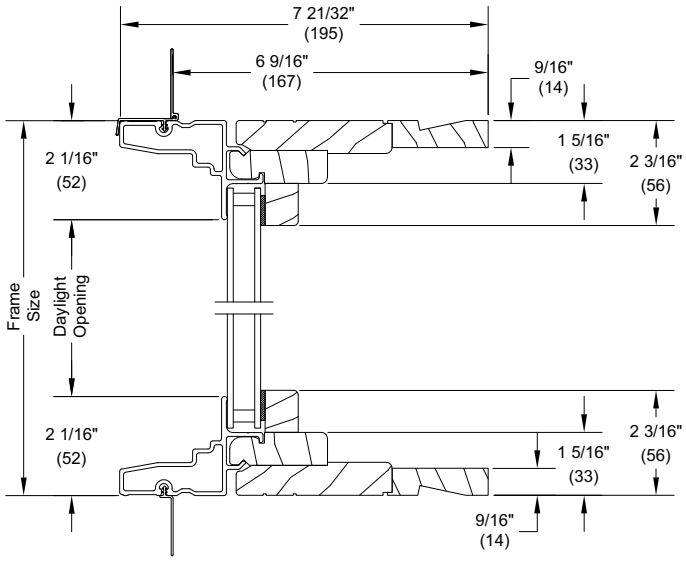

Jamb

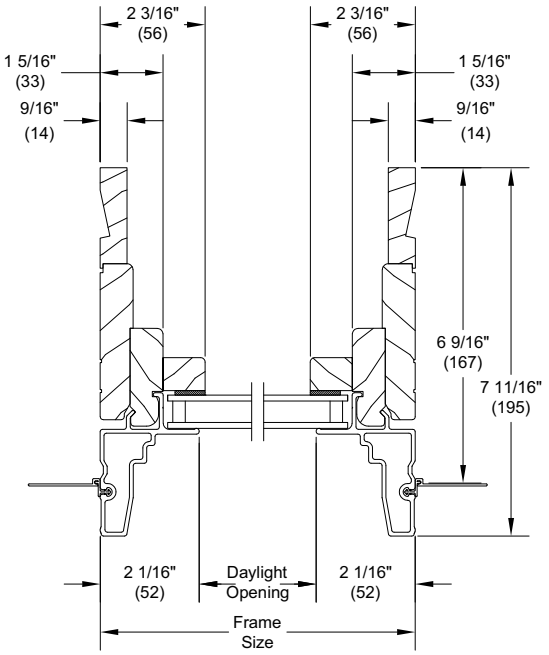

Section Details: Direct Glaze Rectangle - 4 9/16" Jamb (IZ3)

Scale: 3" = 1' 0"

Head
Jamb

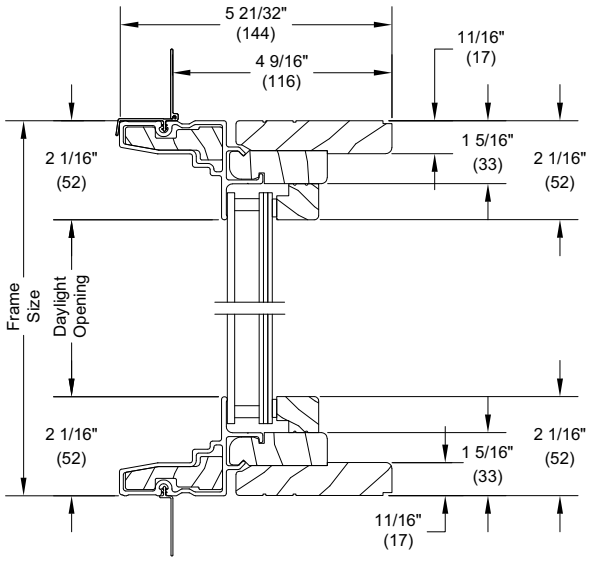

Sill

Jamb

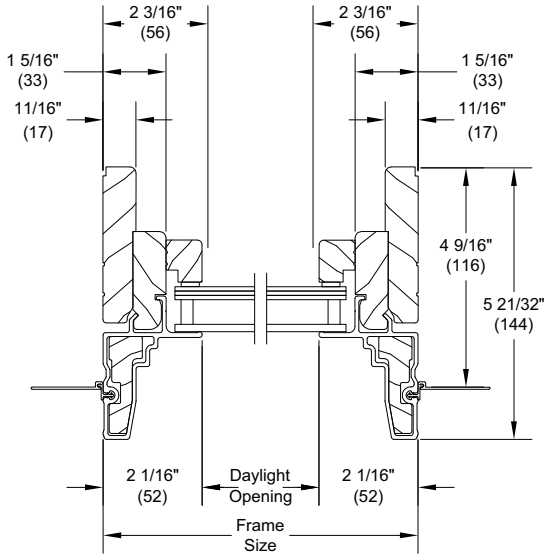

Section Details: Direct Glaze Rectangle - 6 9/16" Jamb (IZ3)

Scale: 3" = 1' 0"

Head
Jamb

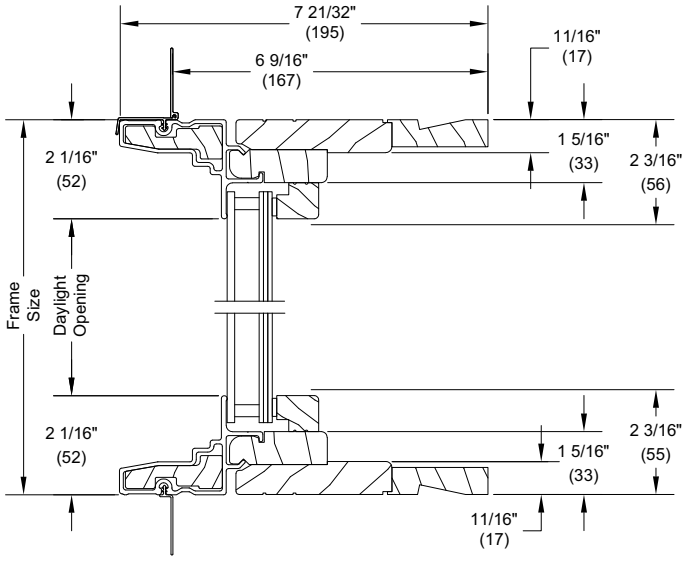

Sill

Jamb

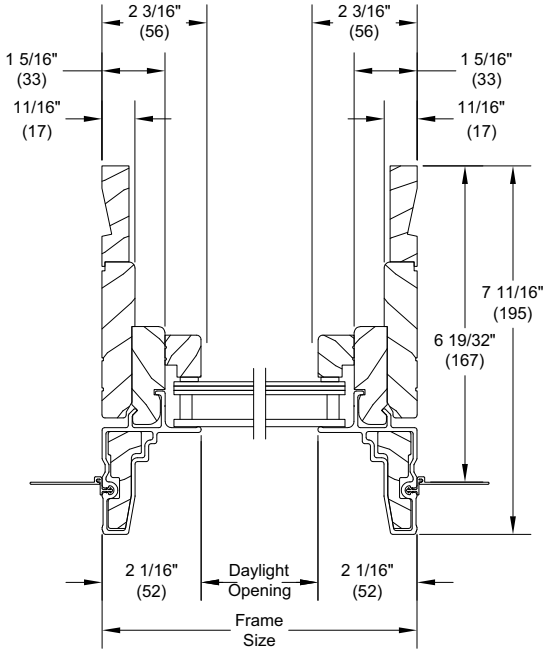

Section Details: Mullions (Standard Mull)

Scale: 3" = 1' 0"

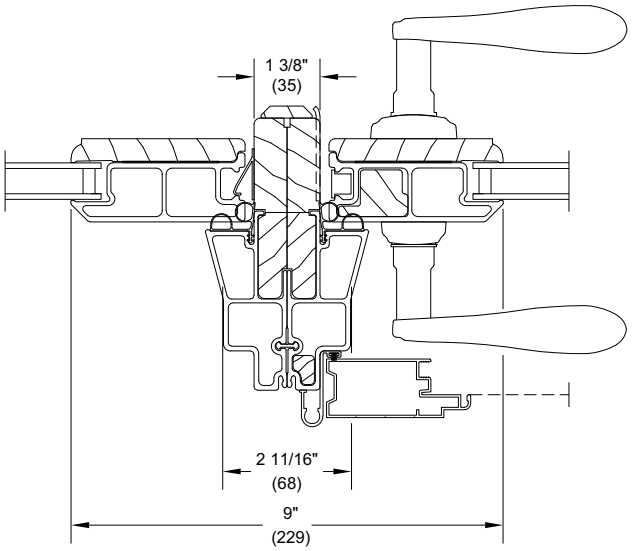

Vertical Standard Mull
O-X or O-XO
Inswing French Door To
Inswing French Door

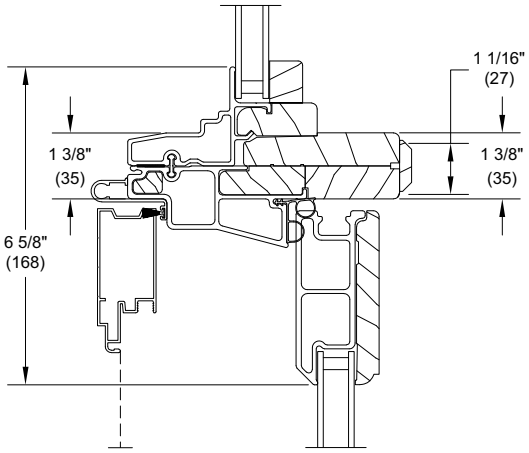

Horizontal Standard Mull
Direct Glaze Rectangle
Over Inswing French Door
4 9/16" Jambs

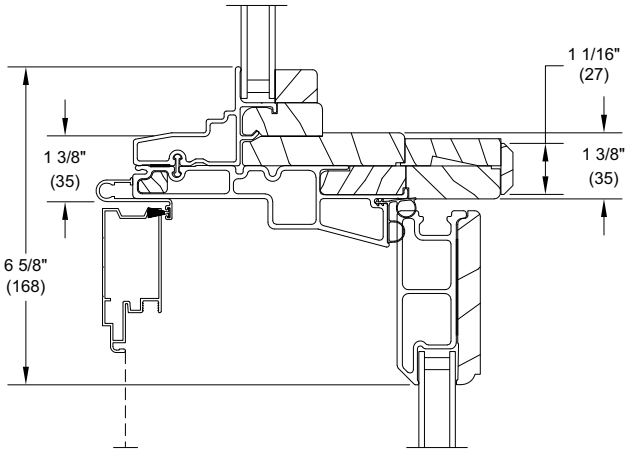

Horizontal Standard Mull
Direct Glaze Rectangle
Over Inswing French Door
6 9/16" Jambs

Section Details: Mullions (1/2" MRF)

Scale: 3" = 1' 0"

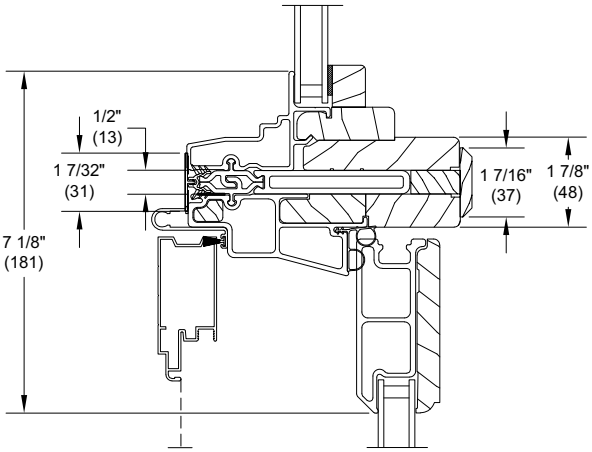

Horizontal 1/2" MRF Direct Glaze Rectangle Over Inswing French Door
4 9/16" Jambs

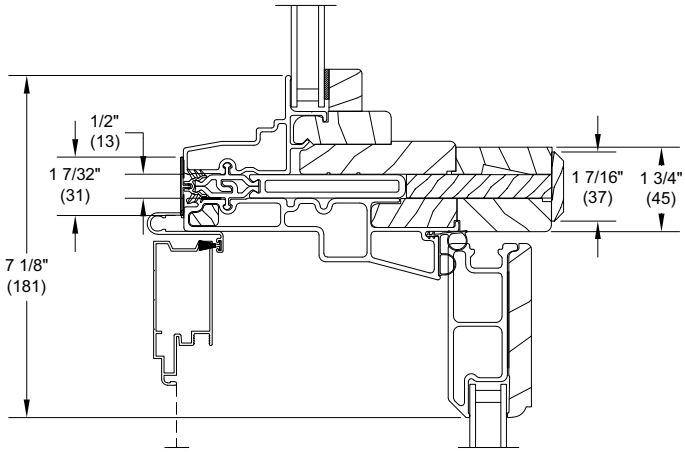

Horizontal 1/2" MRF Direct Glaze Rectangle Over Inswing French Door
6 9/16" Jambs

Section Details: Divided Lite Options

Divided Lite Options

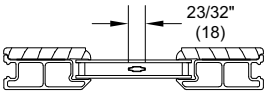

Aluminum Grille
Between Glass

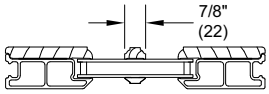

Wood SDL
Without Spacer Bar

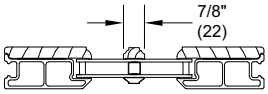

Wood SDL
With Spacer Bar

Conversion Formula:

Total DLO - Total Bar Width / Number of lites =Individual DLO

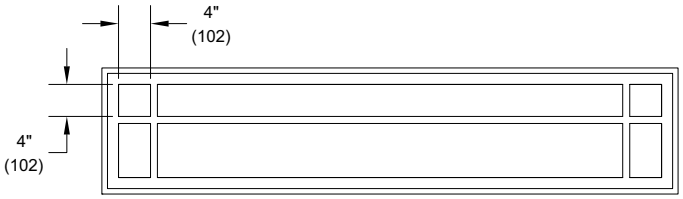

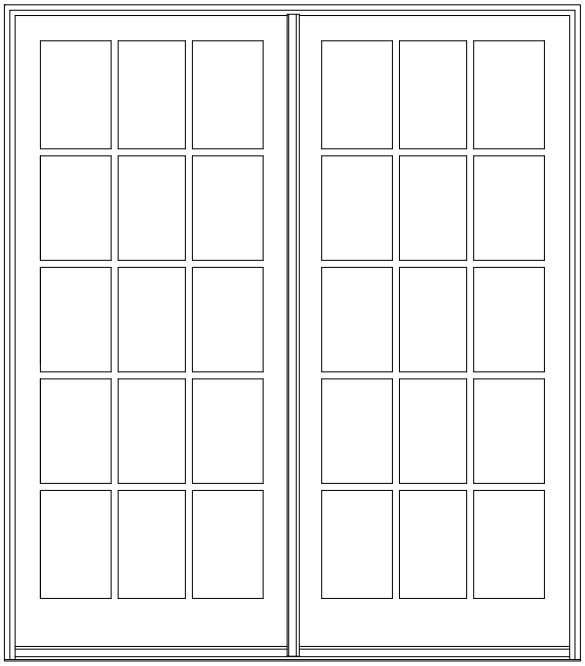

Rectangle Cut

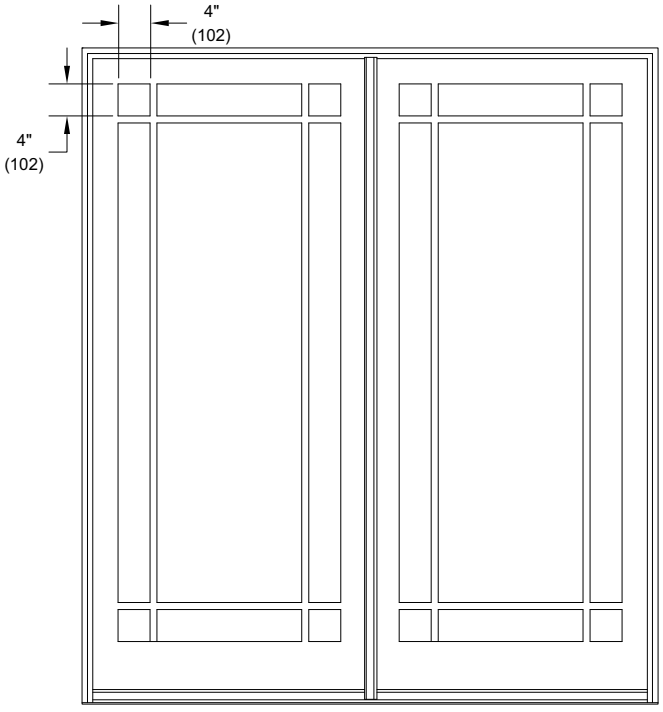

Prairie Lite Cut

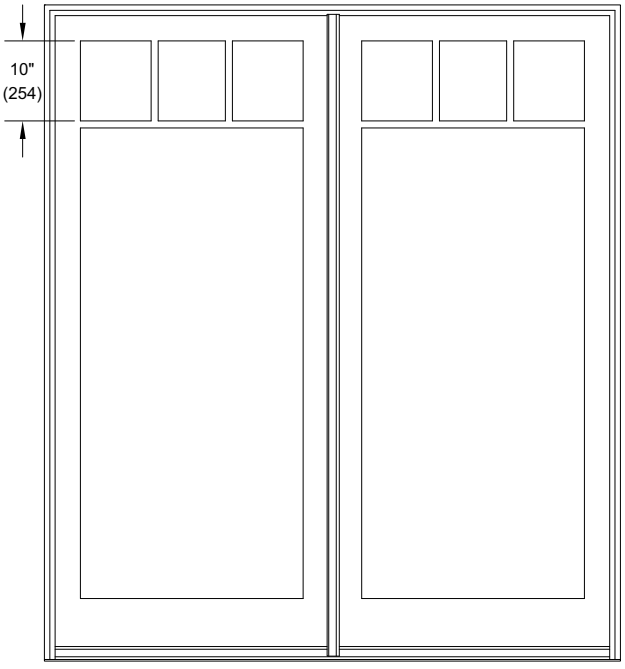

Cottage Lite Cut

NOTE: Optional 9 lite per panel Prairie cut GBG or SDL

NOTE: GBGs are not available on IZ3 units

Section Details: Divided Lite Options

Default Rectangular Lite Pattern per Panel - GBG, SDL, SDLS

Standard CN Height	Standard CN Width					
	26	28	30	50	54	60
65	3W5H	3W5H	3W5H	3W5H	3W5H	3W5H
68	3W5H	3W5H	3W5H	3W5H	3W5H	3W5H
70	3W5H	3W5H	3W5H	3W5H	3W5H	3W5H
80	3W6H	3W6H	3W6H	3W6H	3W6H	3W6H

Optional Rectangular Lite Pattern per Panel - GBG, SDL, SDLS

Standard CN Height	Standard CN Width					
	26	28	30	50	54	60
65	2W5H	2W5H	2W5H	2W5H	2W5H	2W5H
68	2W5H	2W5H	2W5H	2W5H	2W5H	2W5H
70	2W5H	2W5H	2W5H	2W5H	2W5H	2W5H
80	2W6H	2W6H	2W6H	2W6H	2W6H	2W6H

Optional Prairie Lite Pattern per Panel - GBG, SDL, SDLS

Standard CN Height	Standard CN Width					
	26	28	30	50	54	60
65	9-Lite	9-Lite	9-Lite	9-Lite	9-Lite	9-Lite
68	9-Lite	9-Lite	9-Lite	9-Lite	9-Lite	9-Lite
70	9-Lite	9-Lite	9-Lite	9-Lite	9-Lite	9-Lite
80	9-Lite	9-Lite	9-Lite	9-Lite	9-Lite	9-Lite

NOTE: Prairie Pattern GBG and SDLS are not available for CN80 height.

Optional Cottage Lite Pattern per Panel - SDL, SDLS

Standard CN Height	Standard CN Width					
	26	28	30	50	54	60
65	4-Lite	4-Lite	4-Lite	4-Lite	4-Lite	4-Lite
68	4-Lite	4-Lite	4-Lite	4-Lite	4-Lite	4-Lite
70	4-Lite	4-Lite	4-Lite	4-Lite	4-Lite	4-Lite
80	4-Lite	4-Lite	4-Lite	4-Lite	4-Lite	4-Lite

INSWING FRENCH DOOR DIRECT GLAZE RECTANGLE

Default Rectangular Lite Pattern per Panel - GBG, SDL, SDLS

Standard CN Height	Standard CN Width		
	36	72	108
16	3W1H	6W1H	9W1H

Optional Rectangular Lite Pattern per Panel - GBG, SDL, SDLS

Standard CN Height	Standard CN Width		
	36	72	108
16	2W1H	4W1H	6W1H

Optional Prairie Lite Pattern per Panel - GBG, SDL, SDLS

Standard CN Height	Standard CN Width		
	36	72	108
16	6-Lite Top	6-Lite Top	N/A

Section Details: Divided Lite Options

NOTES:

- Rectangle GBGs for special size units will default to the next smaller standard size lite pattern. Also available will be Prairie patterns, Cottage patterns, and customer specified equal rectangular lite patterns.
- Rectangular SDL for special size units will default to the next smaller standard size lite pattern. Also available will be Prairie patterns, Cottage patterns, and customer specified equal rectangular lite patterns.
- Prairie GBG and SDL available in 9 lite and 6 lite top, bottom, left, and right patterns.
- Cottage GBGs and SDL for special sizes units will default to the next smaller standard size lite pattern. Cottage GBGs and SDL are also available in customer selected lite patterns.
- Maximum number of lites wide and high for equal lite SDL option is 11 lites.
- Minimum DLO measurement for equal lite SDL option is 4” (102) and will be validated by OMS.
- Minimum DLO measurement for equal lite GBG option is 3” (76) and will be validated by OMS.
- Standard DLO measurement for Prairie GBG and SDL options is 4” (102). Special DLO corners are n/a.
- Standard DLO height measurement for Cottage SDL option is 10” (254). Minimum DLO height is 8” (203) for one high pattern. Minimum DLO height is 4” (102) for two high pattern.
- Standard DLO height measurement for Cottage GBG option is 10” (254). Minimum DLO height is 3” (76) for both one and two high patterns.
- Simulated Rail: Rectangular, Prairie 6- Lite and 9- Lite SDL patterns are available with Simulated Rail.
- Simulated Rail: Custom ratio and specified DLO are available with Simulated Rail and will be validated by OMS.
- GBGs are not available on IZ3.
- GBGs are not available with an unsupported bar length > 72”.

Installation Suggestions: Brick Veneer with Steel Frame Construction

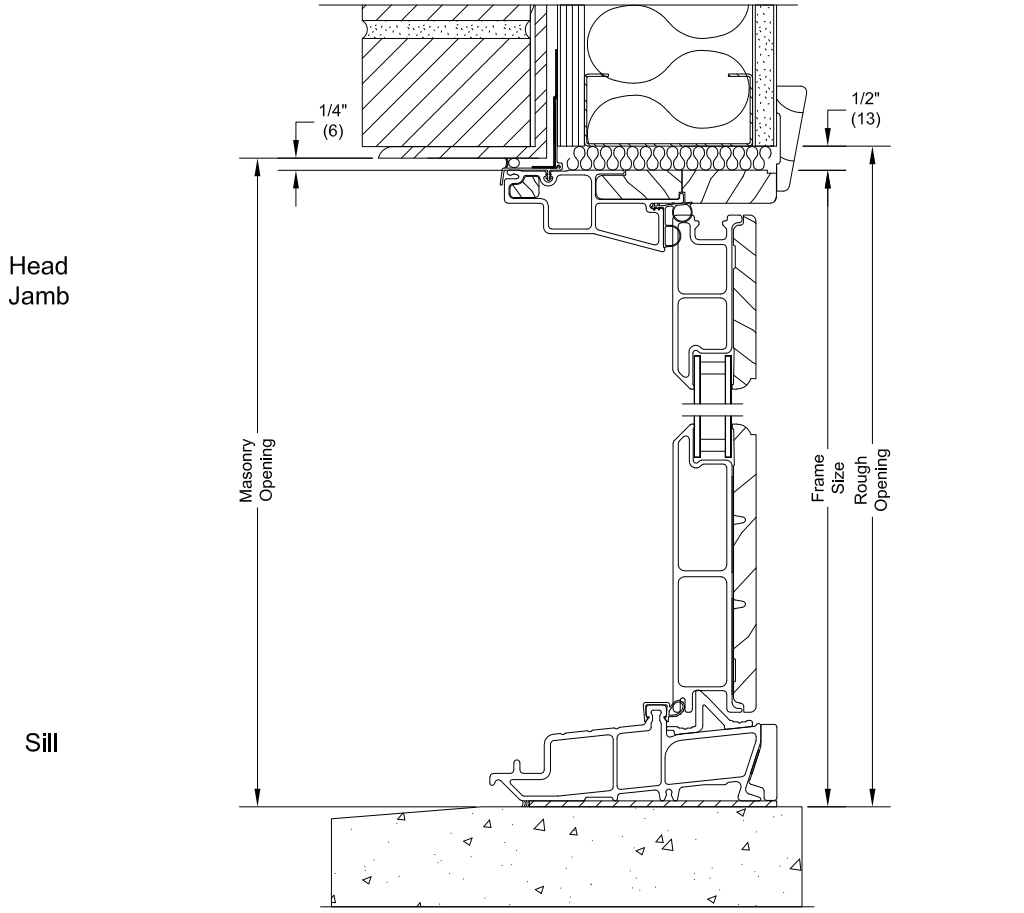

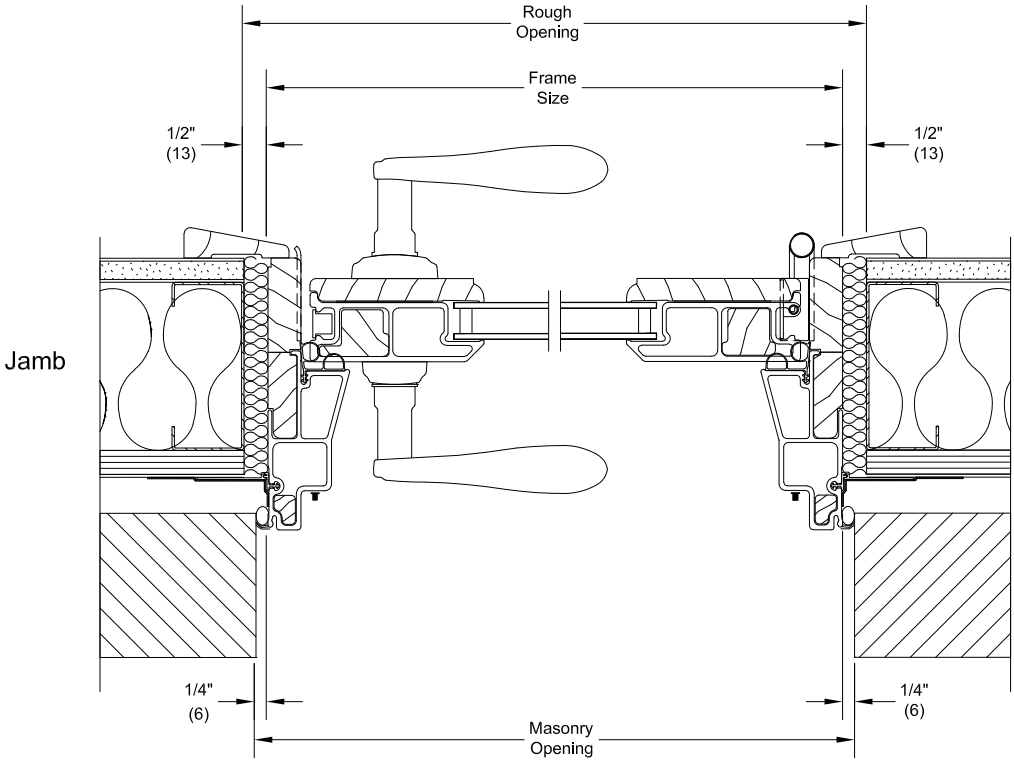

NOTE: The above wall sections represent typical wall conditions, these detail are not intended as installation instructions. Please refer to the installation instructions provided with the purchased units.

Installation Suggestions: Wood Siding with 2x6 Frame Construction

Head
Jamb

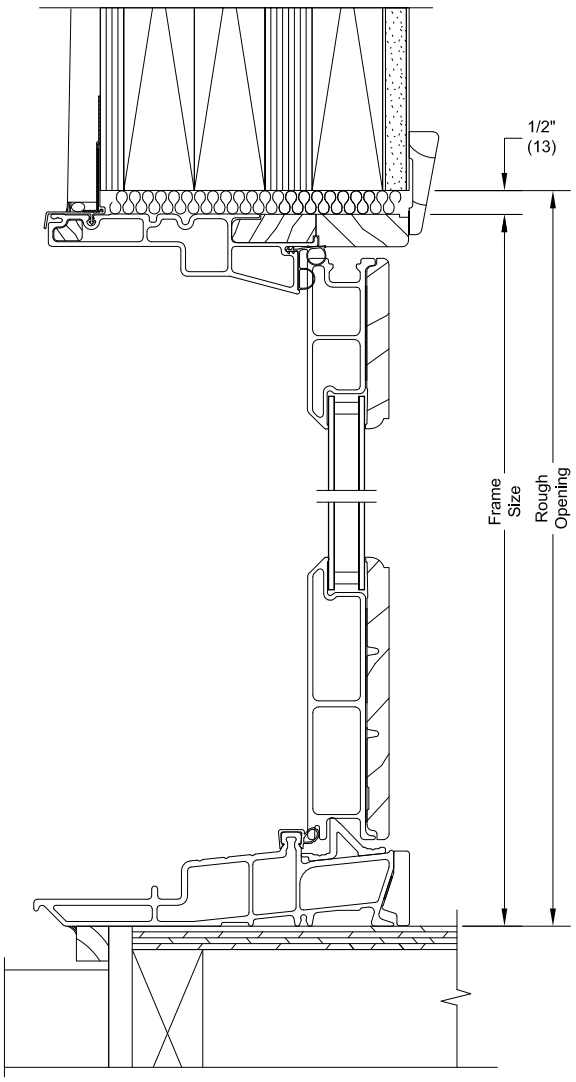

Sill

Jamb

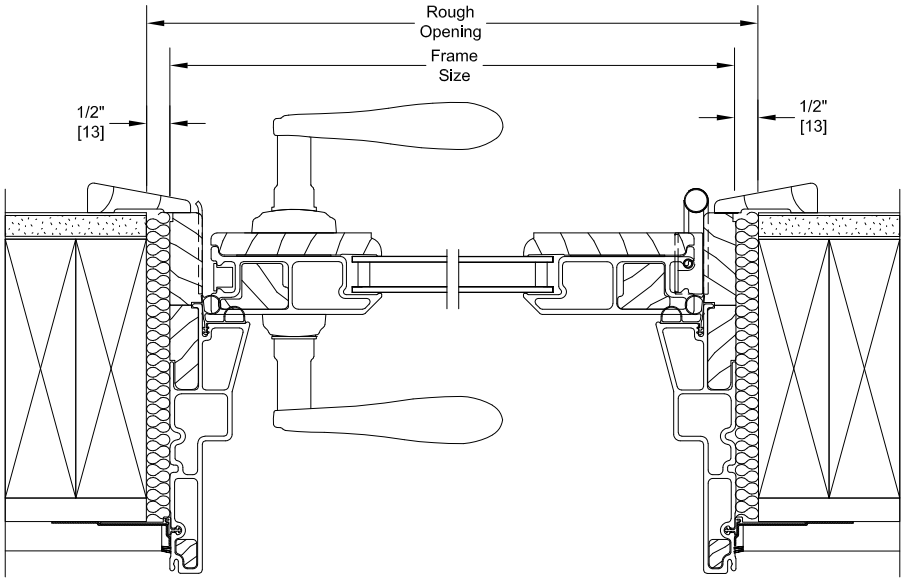

NOTE: The above wall sections represent typical wall conditions, these detail are not intended as installation instructions. Please refer to the installation instructions provided with the purchased units.

Installation Suggestions: Stucco with 2x4 Frame Construction

Scale: 3" = 1' 0"

Head
Jamb

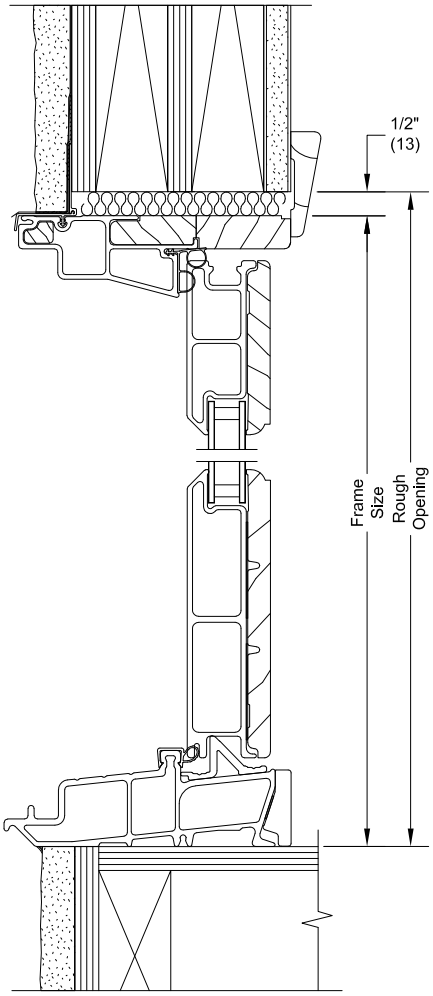

Sill

Jamb

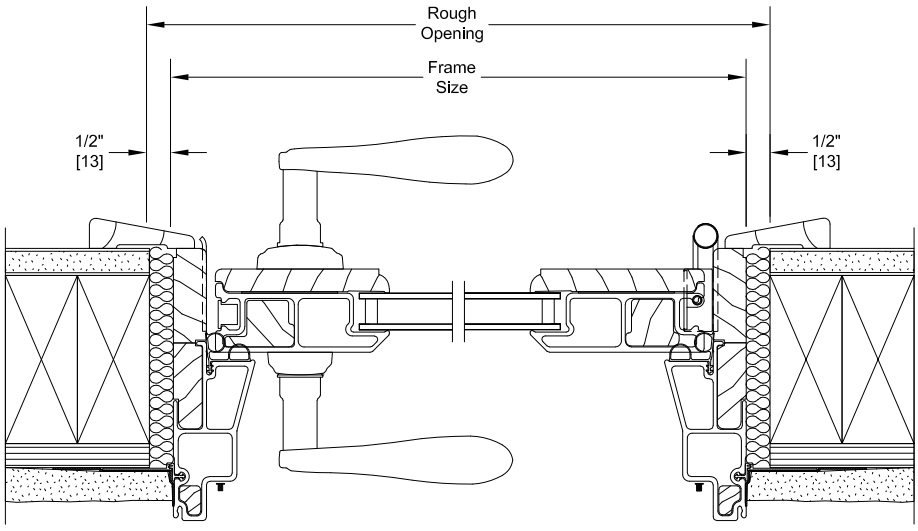

NOTE: The above wall sections represent typical wall conditions, these detail are not intended as installation instructions. Please refer to the installation instructions provided with the purchased units.


100
Pine


SCHOOL AHEAD
LOOK OUT
CHILDREN
110
Pine