CITY OF PORTLAND, MAINE
PLANNING BOARD



Sean Dundon, Chair
Brandon Mazer, Vice Chair
Bob Dunfey
David Eaton
David Silk
Austin Smith
Maggie Stanley

AGENDA
PORTLAND PLANNING BOARD MEETING

The Portland Planning Board will hold a meeting on Tuesday, December 10, 2019, Room 24, Basement Level of City Hall, 389 Congress Street. **Public comments will be taken for each item on the agenda during the estimated allotted time and written comments should be submitted to planningboard@portlandmaine.gov**.

WORKSHOP - 4:30 PM

i. Level III Site Plan and Subdivision; 58 Fore Street; Portland Foreside Development Company, Applicant. (estimated time 4:30 - 5:15 p.m.) The Planning Board will hold a workshop to consider a proposal for Phase 1 of 58 Fore Stree, which includes 442,500 square feet of mixed-use development, the subdivision of the site into 9 development parcels, and various infrastructure, utility, and access improvements. The subject property is a 10-acre parcel zoned B-5 and EWPZ, a portion of which lies within the Shoreland Zone.

ii. Level III Site Plan; 754 Congress Street, CenterWest, LLC., Applicant. (estimated time 5:15 - 6:00 p.m.) The Planning Board will hold a workshop to consider a proposal for a four-story, 46-room commercial hotel with ground-floor retail and 17 parking spaces. The subject property is a 10,692 square foot parcel zoned B-2b Community Business and is subject to the City's Inclusionary Zoning for Hotels requirements.

iii. Consideration of Potential Munjoy Hill Historic District and Individual Landmark Designations. (estimated time 6:00 p.m.) The Planning Board will hold a workshop to consider the Historic Preservation Board's recommendation to designate an area within the Munjoy Hill neighborhood as a local historic district under the provisions of Portland's historic preservation ordinance. The Historic Preservation Board is also recommending that the following structures outside the proposed district boundary be individually designated as local landmarks: 101-107 Congress, 7 Lafayette Street, 8-12 Montreal Street, 51 Monument Street, 21 Sheridan Street and 28 Waterville Street.

EVENING WORKSHOP - 7:30 P.M.

Level III Site Plan; 275 Presumpscot Street; Waldon Realty, LLC., Applicant. (estimated time 7:30 - 8:15 p.m.) The Planning Board will hold a workshop to consider a proposal for the construction of a 34,000 square-foot indoor vehicle storage facility at 275 Presumpscot Street. The subject property is a 77,420 square-foot site zoned I-M and is currently utilized as a gravel parking lot.

PUBLIC HEARING - 8:15 PM

1. ROLL CALL AND DECLARATION OF QUORUM

2. COMMUNICATION AND REPORTS

3. REPORT OF ATTENDANCE AT THE MEETING HELD ON 11-26-19

Afternoon Workshop

175 Fore River Parkway - Dundon, Dunfey, Mazer, Silk, Smith and Stanley present; Eaton absent.

58 Fore Street - Dundon, Dunfey, Mazer, Silk, Smith and Stanley present; Eaton absent.

Evening Public Hearing

109 Harvard Street - Dundon, Dunfey, Mazer, Silk, Smith and Stanley present; Eaton absent.

4. REPORTS OF DECISIONS AT THE MEETING HELD ON 11-26-19

i. Zoning Map Amendment; 109 Harvard Street; Wescott & Payson II, LLC., Applicant. Mazer moved and Stanley seconded a motion to find the proposed R-5 zoning map amendment consistent with the Comprehensive Plan for the City of Portland and recommended adoption of the zoning map amendment to the City Council. Vote 6-0, Eaton absent.

5. NEW BUSINESS

i. Level III Site Plan and Conditional Use; 1884 Forest Avenue; John Chau, Applicant. (estimated time 8:15 p.m.) The Planning Board will hold a workshop on a proposal for a mixed-use development consisting of a convenience store, a gas station with 4 fueling islands, and a multi-tenant retail space at 1884 Forest Avenue. Two access drives are proposed at Forest Avenue with a third access at Riverton Drive. The 1.61 acre site is zoned B-2 Community Business.

Memorandum
Planning and Urban Development Department
Planning Division

To:	Sean Dundon, Chair and Members of the Portland Planning Board
From:	Christian Roadman, Planner
Date:	December 6, 2019
Re:	58 Fore Street Mixed-Use Development
Project #:	PL-000924-2019
CBLs:	018 A001; 018 A002; 018 A003
Meeting:	December 10, 2019



Site context of proposed development at 58 Fore Street. The project site is outlined in teal.

I. INTRODUCTION / PROPOSED DEVELOPMENT

Portland Foreside Development Co. seeks to create a mixed-use development on an approximately 10 acre site of the former Portland Company Complex. The project received master development plan approval from the Planning Board in 2016. The applicant is currently seeking Level III site plan approval for the project's first phase. Phase 1 is intended to include renovation of several existing buildings, reconstruction of a previously deconstructed building, and new construction. The total floor area of proposed development is 442,500 sf. This total includes:

- 16,100 sf. (14 units) residential
- 110,700 sf. office
- 49,500 sf. retail / service / restaurant
- 17,900 sf. event space
- 248,300 sf. (722 spaces) dedicated to parking

Much of the proposed development also includes open plaza-style space. The proposed disturbed area of phase 1 site work is 343,100 sf. A marina, which was proposed as part of the master development plan, is already constructed and operating to the south of the phase 1 development site.

Given the scale of the proposed development, staff and the project team intend to review and discuss the proposed development over several Planning Board workshops before it advances to a public hearing. The first workshop, held on November 26, served as an introduction to the project for the Planning Board. Staff highlighted several general concerns: the amount of impervious surface / asphalt proposed in Phase 1, light pollution, and the adequacy of the transportation demand management program. Planning Board members also emphasized ADA access, traffic impacts on and views from Fore Street, landscaping, interim conditions, and the project team's strategy to meet inclusionary zoning requirements as areas of particular interest.

The December 10 workshop is intended as an opportunity for the applicant to respond to initial concerns and detail their intended approach to these concerns moving forward. A workshop on January 14 will focus more specifically on transportation management, traffic, and circulation.

Applicant: Portland Foreside Development Co.
Consultants: Woodard & Curran (engineer); Bruner / Cott Architects, Perkins + Will (architect);

II. REQUIRED REVIEWS

Waiver Requests	Applicable Standards
Maximum illumination levels at property line (exceeded)	Technical Manual, Section 12.3.4 (light trespass) requiring a maximum 0.1 foot candles beyond property line
Review	**Applicable Standards**
Site Plan	Section 14-526
Subdivision	Section 14-497
Conditional Use (parking)	Section 14-68
Inclusionary Zoning	Section 14-474, Section 14-487
Site Location of Development	Technical Manual Section 14



Rendering of proposed development at 58 Fore Street (image: applicant)

III. PROJECT DATA

Existing Zoning	B6; EWPZ
Existing Use:	Industrial / manufacturing / warehouse
Proposed Use	Mixed-use development (office, residential, retail, event, parking)
Bedroom Mix	Efficiency: three 1 Bedroom : four 2 Bedroom: seven
Parcel Size	492,100 sf.

	Existing	Proposed	Net Change
Building Footprint (sf.)	101,700	137,300	+35,600
Building Floor Area (sf.)	101,700	457,400	+355,700
Impervious Surface Area (sf.)	266,000	292,000	+26,000
Parking Spaces	110	722	+612
Bicycle Parking Spaces	0	33	+33

IV. PUBLIC COMMENT AND NEIGHBORHOOD MEETING

The Planning Department received eight public comments (**attachment PC**) regarding this project. The applicant team held a neighborhood meeting on November 25 2019, a day before the first Planning Board workshop. Standard certification and summary materials for that meeting will be required of the applicant.

V. RIGHT, TITLE, & INTEREST

The applicant provided several deeds (**attachment F**) as evidence of right, title, and interest.

VI. ZONING ANALYSIS

The project falls primarily within the B-6 eastern waterfront mixed zone. Office, restaurant, retail, and residential uses are all permitted in the zone. Temporary events are permitted with restrictions; "meeting and exhibition facilities" are a conditional use. (Staff will consult with the Zoning Department to determine the appropriate definition in this instance.) Parking is a conditional use in the zone.

The B-6 Eastern Waterfront mixed use zone is subject to a building height overlay and view corridor restrictions. Building height will be determined in part using calculations of average grade on the site. The applicant provided supporting documents regarding these calculations (**attachment U**) and met with staff to present their methodology. Staff review of relevant materials is ongoing.

A portion of the development site, particularly the existing marina, falls within the Eastern Waterfront Port Zone (EWPZ).

While the applicant intends for future development phases, a large parking structure is included in the first phase. This results in a parking provision significantly higher than is currently required (722 spaces, primarily via the 652 space parking garage). The applicant calculates the parking demand of the first phase as 385 parking spaces, and the recommended number of parking spaces for 453 spaces (**attachment U**).

The applicant calculates their required bicycle parking as 33 spaces (**attachment J**). Staff seek additional information regarding this calculation, and the assumptions underlying it, from the applicant team.

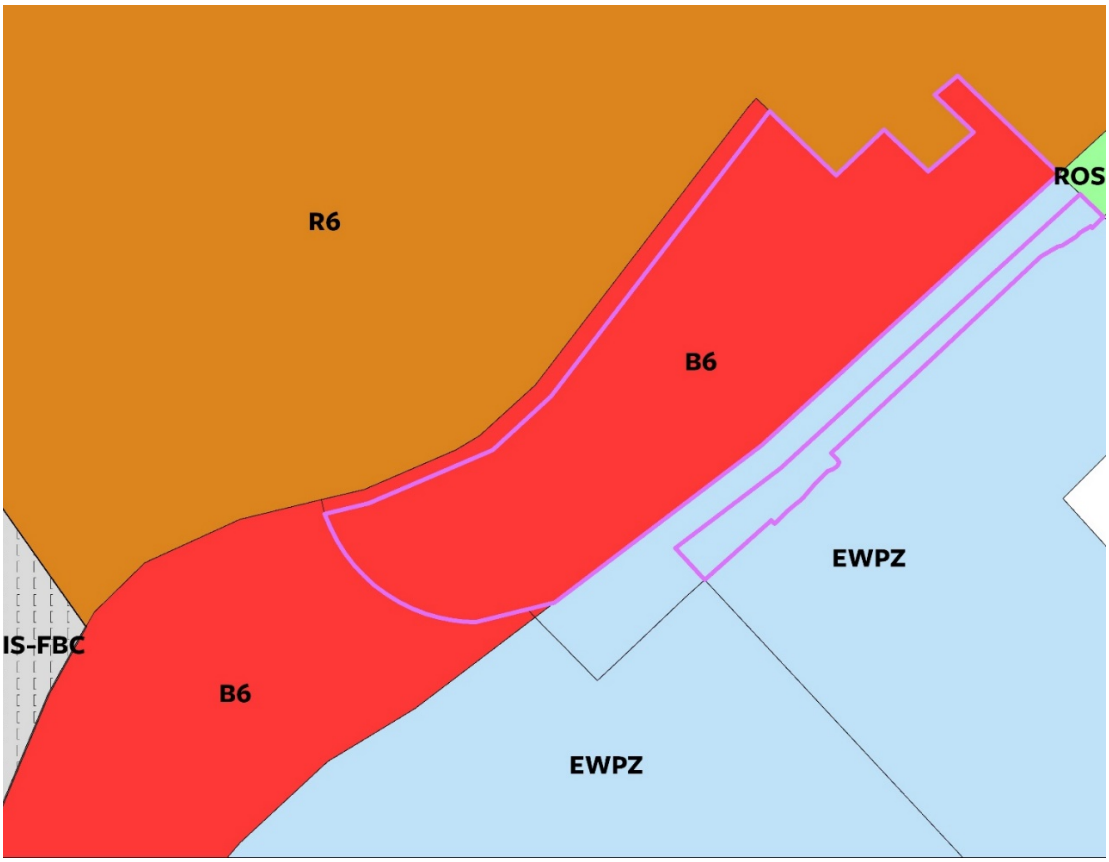

Zoning context of proposed development at 58 Fore Street. The project site is outlined in lavender.

The project proposes 14 residential units, and therefore triggers inclusionary zoning requirements of 1.4 affordable residential units. The City's housing program manager determined that the applicant can pay a fee-in-lieu of $148,526 (**attachment 6**) to account for those 1.4 units. Alternatively, the applicant can provide an affordable unit compliant with inclusionary zoning requirements and pay a reduced fee-in-lieu, or provide two such units.

VII. DEVELOPMENT REVIEW

A. SITE PLAN SUBMISSION REQUIREMENTS (Section 14-527) and SUBDIVISION PLAT AND RECORDING PLAT REQUIREMENTS (Section 14-496)

The applicant submitted a draft recording plat. Feedback from staff in the Department of Public Works was provided to the applicant and a revision is expected.

A final plat will need to be revised to reflect any waivers and conditions of approval that relate to the subdivision plan. Any waivers granted must be recorded at the Registry of Deeds within two years of a Planning Board decision.

B. SUBDIVISION (Section 14-496)

Staff are reviewing the proposed development for conformance with the relevant review standards of Portland's Subdivision Ordinance and applicable regulations. Pertinent comments are listed below.

1. Will Not Result in Undue Water and Air Pollution (Section 14-497 (a) 1), and Will Not Result in Undue Soil Erosion (Section 14-497 (a) 4)
   The City's third-party civil engineering reviewer requires additional information and clarification of the applicant, as detailed in their review memo (**attachment 3**).

2. Sufficient Water Available (Section 14-497 (a) 2 and 3)
   The applicant will be required to submit an ability to serve letter from the Portland Water District.

3. Will Not Cause Unreasonable Traffic Congestion (Section 14-497 (a) 5)
   The City's third-party traffic engineering reviewer noted the following as part of their preliminary review (**attachment 2**):

   "In conjunction with the Master Development Plan approval the applicant was issued a MaineDOT Traffic Movement Permit (TMP) for the full buildout of the project. The applicant has conducted a traffic assessment for the current phase and my initial conclusion is that trip generation levels are under the TMP permitted trip bank for the site. I would note that I continue to review methods for the trip generation estimate."

   "The application indicates the project will include a new Events Space and that traffic levels are not expected to change from prior occupancy given that historically events have been held at the site. I would like to fully understand both historic and future event programs before supporting the conclusion that no additional new traffic is expected."

4. Will Provide for Adequate Sanitary Sewer and Stormwater Disposal (Section 14-497 (a) 6), and Will Not Cause an Unreasonable Burden on Municipal Solid Waste and Sewage (Section 14-497 (a) 7)
   The applicant provided an application for wastewater capacity confirmation (**attachment N**). Confirmation of such by the Department of Public Works will be required.

5. Will not have an undue adverse effect on the scenic or natural beauty of the area, aesthetics, historic sites, significant wildlife habitat (Section 14-497 (a) 8)
   Adherence to zoning-related height restrictions and view corridors must be reviewed further by staff.

6. Comprehensive Plan (Section 14-497 (a) 9)
   The applicant indicates (**attachment L**) that a number of policy goals in the City's comprehensive plan are advanced by the proposed project, including the following:

   - "Promote historic preservation as a key economic, sustainability, and community development strategy"
   - "Stabilize and enhance historic areas of the city by ensuring quality investment in existing structures and compatible infill development
   - "Create economic prosperity by growing Portland's tax and employment base"
   - "Reinforce the waterfront as a key component of Portland's economic health, balancing traditional and emerging industries with tourism and recreation"

7. Adequate financial and technical capacity (Section 14-497 (a) 10)
   The applicant cited their team's experience (**attachment I**) as evidence of technical capacity to complete the project. A letter from Ackman-Ziff Real Estate Capital Advisors (**attachment I**) notes the applicant's "relationships with capital partners, banks, and financial institutions" as evidence of financial capacity, and states that that firm will "work with [the applicant] to arrange the appropriate capitalization for each phase of the development."

8. Will not adversely affect the quality or quantity of groundwater (Section 14-497 (a) 12)
   The City's third-party civil engineering reviewer is ongoing. Please see 1, above.

9. Is or is not in a flood-prone area (Section 14-497 (a) 13)
   As the proposed project is located in a flood-prone area, the applicant is expected to submit a flood hazard development permit for this project, which will be reviewed by the Zoning Department.

10. All potential wetlands are identified (Section 14-497 (a) 14)
    Not applicable.

11. Any river, stream or brook within or abutting the proposed subdivision are identified Section 14-497 (a) 15)
    Not applicable.

C. SITE PLAN STANDARDS (Section 14-526)

The proposed development is under review by staff for conformance with the relevant review standards of Portland's site plan ordinance and applicable regulations. Staff and reviewer comments are discussed below.

a) Transportation Standards

Impact on Surrounding Street Systems; Access and Circulation; Public Transit Access; Parking; Transportation Demand Management

As noted above, the City's third-party transportation engineering reviewer continues to review the project and requests additional information of the applicant (**attachment 2**).

The City's transportation programs manager is also reviewing the project (**attachment 4**). He provided several comments regarding the current proposal, including:

- Additional information on proposed bike racks (and better distribution of them) is needed
- The transitions from the 58 Fore Street property to the Eastern Promenade Trail feature wide swaths of asphalt. The character of these spaces and transitions should be reviewed.
- The TDM plan "is generally vague and weak on the types of actual programs / incentives that will be offered and in its commitments."

The Department of Public Works senior engineer also offered relevant comments (**attachment 1**) pertaining to the applicant's proposed shared-use driveway, and seeking additional information / detail regarding delineation and periods of heavy use. They also offered specific directives regarding widening the Fore Street sidewalk along the property line to at least eight feet wide, exploring the feasibility of providing accessible access from the site via Fore Street, and other specific items.

b) Environmental Quality Standards

Preservation of Significant Natural Features; Landscaping and Landscape Preservation; Water Quality, Storm Water Management and Erosion Control

The City's arborist offered initial comments (**attachment X**) on the provided landscape plans (**attachment P22**). They noted that the project's existing effort to utilize native plants should be strengthened, encouraged "groves" of plants where appropriate instead of individual trees and shrubs, and noted the need for root zone and planting protection measures, especially in regards to winter ice and salt.

Because the proposed project includes fourteen residential units, it must provide fourteen street trees. The project also must account for an appropriate number of street trees for commercial development, per the City's Technical Manual. Staff calculate the total number of required street trees as approximately 45, while eleven street trees are provided. Additional street trees may be provided by the applicant, or they may pay into the City's street tree fund at a rate of $400 per tree (34 street trees unaccounted for results in a $13,600 street tree contribution).

The Department of Public Works senior engineer also noted (**attachment 1**) the following:

"There is a large amount of impervious area on the site, both in terms of pavers that will remain in the completed stage of the project and a reclaim asphalt area that will be developed in future phases. The applicant should consider ways to reduce the impervious area of the site, using additional landscaped areas and/or permeable pavers. The reclaim asphalt area, which is proposed to be used for miscellaneous marina vehicle storage, drop-off, and emergency vehicle access, can be reduced and/or constructed with permeable materials, this would be preferred."

c) Public Infrastructure and Community Safety Standards

As noted above, confirmation of ability to serve from the Portland Water District and confirmation of adequate wastewater capacity from the Department of Public Works must be provided by the applicant.

The proposed development requires further review by the Fire Department.

d) Site Design Standards

Lighting

The applicant provided cut sheets for lights and a photometric plan (**attachment J**). The applicant also requests a waiver from the maximum light spillage standard of the City's Technical Manual.

Many of the proposed lights do not seem to conform to the requirement that they be full-cutoff. Additionally, while the lighting plan requires further review, staff is concerned that architectural / projector / luminaire lighting may not conform to the spirit and directives of the City's Technical Manual. Additional applicant attention to lighting, especially in regard to light pollution, is necessary.

Zoning Related Design Standards

The City's urban designer provided a memo regarding this project (**attachment 5**), which the applicant team should review in full. It is worth noting that significant areas of the project are subject to historic preservation review, which is ongoing.

Staff also note that the elevations for the proposed building 1A (**attachment P12**) include a noted alternate which may reduce the amount of brick used on the building (a significant design element). Staff seek clarity from the applicant regarding the potential extent of alternates, and input from the board regarding willingness to consider alternates generally.



Rendering of proposed phase 1 development at 58 Fore Street (image: applicant)

VIII. NEXT STEPS

Staff and third party reviews of this project continue. Formal responses to previously provided comments, as well as updated / revised plans and documents are expected from the applicant in the near future. The December 10 workshop provides an opportunity for the Board and applicant to further clarify expectations and project direction.

The project's next Planning Board workshop, scheduled for January 14, will focus primarily on transportation management, traffic, and circulation.

XIII. ATTACHMENTS

PLANNING BOARD REPORT ATTACHMENTS

1. DPW Engineer Review 11-20-2019
2. Third-Party Traffic Engineer Review 11-21-2019
3. Third-Party Civil Engineer Review 11-20-2019
4. Transportation Programs Manager Review 11-21-2019
5. Urban Designer Review Memo 11-21-2019
6. Housing Programs Manager Review 12-4-2019
7. City Arborist Review 11-25-2019

PUBLIC COMMENT

PC. Compiled Public Comment 1-8

APPLICANT'S SUBMITTALS

A. Application Cover & Table of Contents
B. Application Checklist
C. Application Fees
D. Project Summary
E. Waiver Requests
F. Evidence of Right, Title, & Interest
G. Easements & Other Burdens
H. Evidence of State & or Federal Approvals
I. Evidence of Financial & Technical Capacity
J. Consistency with Portland Design Standards
K. Zoning Assessment
L. Consistency with City Comprehensive Plan
M. Boundary Survey
N. Availability & Adequacy of Public Utilities
O. Portland Fire Department Site Design Checklist
P. Site Location of Development Report
Q. Citizen Self Service Summary Letter
R. Stormwater Management Report
S. Phase 1 Transportation Demand Management Plan
T. Phase 1 Traffic Analysis
U. Additional & Revised Height, Parking Information

PLANS

P1. Civil Cover Sheet
P2. Civil General Notes & Legend
P3. Boundary Survey
P4. Existing Conditions Plans
P5. Demolition Plans
P6. Site Plans
P7. Grading & Drainage Plans
P8. Utility Plans
P9. Pipe & Structure Tables
P10. Subdivision Plat
P11. Civil Details

P12. Elevations
P13. Block 1 Building 1A Floor Plans
P14. Block 1 Building 12 Floor Plans
P15. Block 2 Buildings 2 & 3 Floor Plans
P16. Block 2 Buildings 6A & 6B Floor Plans
P17. Block 2 Embankment Floor Plans
P18. Block 4 Building 4A Floor Plans
P19. Block 4 Townhouse Floor Plans
P20. Renderings
P21. Construction Management
P22. Landscape Plans & Details

Portland Maine Yes. Google's good here.

Christian Roadman <croadman@portlandmaine.gov>

58 Fore - initial comments

Mike Tremblay <mtremblay@portlandmaine.gov> Wed, Nov 20, 2019 at 3:50 PM
To: Christian Roadman <croadman@portlandmaine.gov>

Christian,

Here are my initial comments on the 58 Fore development. I may have more as the design process progresses.

- While DPW is open to and encouraging of the shared-use driveway extending from the end of Thames Street, we will want to ensure that the shared driveway considers the following: a) amount and hours of traffic that will be using this driveway, and the safety and comfort of pedestrians during periods of heavy use; b) the ability to delineate a dedicated pedestrian area, so that modes may position themselves accordingly during peak periods; additionally, how this delineation may be accomplished (vertical barriers, paver color/orientation changes, etc); and c) the ability of the shared driveway to accommodate future construction phases adequately, while maintaining vehicle and pedestrian access as needed.

- The Applicant should widen the sidewalk along Fore Street to the property line, rather than providing a landscape area between the property line and sidewalk. Sidewalks on streets with high anticipated pedestrian volumes should ideally be at least 8 feet wide. Additionally, the current sidewalk width presents challenges at pinch points for persons with disabilities and for sidewalk plows.

- The Applicant should explore the feasibility of providing accessible access from the site via Fore Street. The grade differential may prove this difficult; however, the lack of accessibility from Fore Street forces persons with disabilities to travel another 700 feet or so to reach the Thames Street entrance; this inconvenience may be even more pronounced if the person's destination is Building 2 or the embankment building. If a ramp is not feasible, the Applicant should explore other options for providing accessible access to the site via Fore Street.

- There is a large amount of impervious area on the site, both in terms of pavers that will remain in the completed stage of the project and a reclaim asphalt area that will be developed in future phases. The Applicant should consider ways to reduce the impervious area of the site, using additional landscaped areas and/or permeable pavers. The reclaim asphalt area, which is proposed to be used for miscellaneous marina vehicle storage, drop-off, and emergency vehicle access, can be reduced and/or constructed with permeable materials, this would be preferred.

- A graphic showing the proposed phasing of the overall site, and an intuitive naming convention, would be very useful for discussion purposes ahead of public meetings.

Mike Tremblay, P.E.
Senior Engineer
Engineering Division
Department of Public Works
City of Portland, ME
mtremblay@portlandmaine.gov
P. 207.874.8881 F. 207.874.8852

Portland Maine Yes. Google's good here.

Christian Roadman <croadman@portlandmaine.gov>

58 Fore - initial comments

Mike Tremblay <mtremblay@portlandmaine.gov> Fri, Nov 22, 2019 at 1:58 PM
To: Christian Roadman <croadman@portlandmaine.gov>

Christian,

Some additional comments from Keith. Not a huge deal if they don't make it into your memo today; we can circle back on them later.

- The retaining wall on the connector road is described as being constructed "by others". Additional clarity as to who will be designing this wall and when will be helpful.
- An alternate material for the reclaim asphalt area, such as crushed stone or a structural soil allowing for some permeability, should be considered.
- The temporary reclaim asphalt area should not be approved for an indefinite period of time. If future phases of the project do not proceed as expected, an alternate treatment for this area should be required.
- The parking cut-out on Fore Street should be constructed with radial curb. Blunt angles are difficult to maintain. Additional clarity should be provided as to the intended purpose of this area.

Mike Tremblay, P.E.
Senior Engineer
Engineering Division
Department of Public Works
City of Portland, ME
mtremblay@portlandmaine.gov
P. 207.874.8881 F. 207.874.8852

[Quoted text hidden]

Att. 2

Portland Maine Yes. Google's good here.

Christian Roadman <croadman@portlandmaine.gov>

58 Fore Street - Initial Traffic Overview Comments

Tom Errico <thomas.errico@tylin.com> Thu, Nov 21, 2019 at 9:20 AM
To: Christian Roadman <croadman@portlandmaine.gov>
Cc: Bruce Hyman <bhyman@portlandmaine.gov>, Michael Tremblay <mtremblay@portlandmaine.gov>, Jeremiah Bartlett <JBartlett@portlandmaine.gov>

Hi Christian – the following traffic comments represent an initial review of application materials and detailed comments will be provided in the future.

- In conjunction with the Master Development Plan approval the applicant was issued a MaineDOT Traffic Movement Permit (TMP) for the full buildout of the project. The applicant has conducted a traffic assessment for the current phase and my initial conclusion is that trip generation levels are under the TMP permitted trip bank for the site. I would note that I continue to review methods for the trip generation estimate.

- I have not reviewed the Transportation Demand Management Plan (TDM) provided for the project but would note that the trip generation analysis for the project assumes a "multi-modal" (walk, bike, transit, carpool) reduction of 18% and thus the TDM plan should reflect strategies and targets accordingly.

- The application indicates the project will include a new Events Space and that traffic levels are not expected to change from prior occupancy given that historically events have been held at the site. I would like to fully understand both historic and future event programs before supporting the conclusion that no additional new traffic is expected.

- The application notes a parking demand estimate for the site of 159 parking spaces. The applicant should provide analysis in support of this estimate. I would note that the parking demand analysis shall be based on the most current best practice methods available and proposed TDM Plan Strategies.

If you have any questions, please contact me.

Best regards,

Thomas A. Errico, PE
Senior Associate
Traffic Engineering Director
TY LIN INTERNATIONAL
12 Northbrook Drive
Falmouth, ME 04105
+1.207.781.4721 main
+1.207.347.4354 direct
+1.207.400.0719 mobile
thomas.errico@tylin.com

Visit us online at www.tylin.com
Twitter | Facebook | LinkedIn | Instagram

WRIGHT-PIERCE
Engineering a Better Environment

MEMORANDUM

TO:	Christian Roadman, Planner	**DATE:**	11/20/2019
FROM:	Michael Guethle, PE;	**PROJECT NO.:**	20208A
SUBJECT:	58 Fore Street – Level III Site Plan, 000924-2019		

Wright-Pierce has reviewed the initial Level III Site Plan Application information provided for the redevelopment at 58 Fore Street, as defined in the above subject line. The proposed project is located on a 10 +/- acre site bound by Fore Street, Fore Connector Road, a MaineDOT/Railroad ROW, and private abutters. The proposed project includes redevelopment of a former industrial site with several uses, including commercial spaces and business uses, residential uses, developed outdoor spaces, new pedestrian connectivity, and appurtenant needs such as parking and utility connections.

Documents Reviewed by Wright-Pierce:

- Level III Site Plan application, dated (most recent) November 13, 2019
- Engineering Permitting Plans, uploaded (most recent) November 12, 2019

Comments:

1) It is understood that due to the project schedule, not all documents were able to be fully evaluated and commented on. In general, major aspects of the project that are not commented on in this response but will be reviewed at a later date include:
    a. Utility conflicts;
    b. HydroCAD calculations;
    c. Drainage Structures Table and Pipe Schedule;
    d. Grading limitations;
    e. Soils Storage/VRAP program;
    f. Lighting.
2) Level III Site Plan applications with the City of Portland must submit a stormwater plan pursuant to the regulations of MaineDEP Chapter 500 Stormwater Management Rules.

This includes conformance with the Basic, General, and Flooding Standards (Ref: Technical Manual, Section 5. II. Applicability in Portland. C. a.; and Ref: City of Portland Code of Ordinances Sec. 14-526. Site Plan Standards, (b). 3. b.)

a. Basic Standard: Per the City's Technical Manual *Portland Stormwater Management Standards And Maine Dep Chapter 500 Stormwater Management*, an Erosion & Sediment Control management plan, notes, and details per the Chapter 500 Rules must be provided to meet the Basic Standard.
    i. Erosion and Sedimentation Control best practices were observed on the Erosion and Sedimentation Control Plan, Civil Details – 2 (C-201). An Inspection, Maintenance, and Housekeeping Plan has been provided with the application. Additional clarification is needed on blank spaces on the soils, erosion control notes regarding the timeframe of application, Sheet C-201. Further clarification of the placement and location of erosion control, including stockpiling of construction materials and devices will need to be implemented into the design, and discussed in the Construction Management Plan.
b. General Standard: The applicant has provided information regarding the size and scope of the project, and has indicated the project is subject to the General Standard under the requirements of the Site Location of Development Act (SLODA). The project is being reviewed under the redevelopment guidelines and requirements.
    i. The applicant has provided an impact analysis to compare pre-development and post-development land use pollutant rankings under MaineDEP redevelopment guidelines.
        1. The written analysis indicated that the proposed development had a lower pollutant ranking than the existing site and is therefore required to treat 50% of the proposed site's disturbed surface area, with priority placed on the highest-ranked pollutant for the site. However, the calculations show a very small increase in the proposed pollutant ranking when carried out to several digits. The

way the MaineDEP table is structured, a pollutant ranking value of 0.0 can be interpreted to require 60% of a site's redeveloped area treatment, or 50% treatment. To better understand and evaluate the minor changes in pollutant ranking, the following items should be identified on the Redevelopment Figures and further discussed in the stormwater management plan:

a. Parking lot pollutant rankings are generally based on turnover rate. Additional information is needed on which parking lot spaces are low-use, medium-use, and high-use.
b. High-pollutant surface areas should be prioritized for stormwater treatment under the redevelopment standard. Following the above comment, please add additional information on the plans to provide a better understanding of which surfaces are receiving stormwater treatment, and calculations identifying which percentage of the highest pollutant rankings are receiving treatment.
c. Per the City of Portland Technical Manual, Section 5, redevelopment standards, 50% of impervious surfaces require treatment for projects without an existing SLODA permit. An existing SLODA permit was not identified in the application, although application for such permit was referenced. Application shall provide additional information as to existing permits, or discussion on adherence or exception from the 50% impervious treatment requirement.

ii. The proposed proprietary BMP systems, R-Tank and Jellyfish Filters, are accepted best management practices for the proposed project under the MaineDEP. A HydroCAD model has been developed for the site to assist in evaluating the performance of the BMPs.

1. The R-Tank system is proposed to be sized below the standard requirement of providing channel protection volume for 1.0" of impervious area and 0.4" of landscaped area for the proposed SF subcatchment areas. Whereas the City's requirement references the MaineDEP's regulations on this item, approval will need to be granted by MaineDEP for any variance.
2. Hydrologic Soil Group (HSG) "A" has been modeled for portions of the site that are urban fill. Whereas urban fill can substantially vary in porosity, and HSG A soils typically have very low runoff, incorporating the existing urban fill soils as a low-runoff option without advanced soil information may not provide an accurate representation of the runoff from urban fill soils. Additional soil information may be necessary to complete the model, and additional discussion on which modeling assumptions provide conservative final results may also be appropriate.

iii. An executed maintenance contract for the BMP systems is required and may be included as a Condition of Approval.

c. Flooding Standard: The applicant has submitted information regarding a waiver to the flooding standard due to discharges to tidal waters. The applicant will need to provide appropriate discussion and calculations as to how the flooding standard is met for runoff at other down-slope property lines.

3) Grading and Drainage:
   a. The applicant has indicated that a Maine Construction General Permit will be issued for the project prior to construction.
   b. Grading and Drainage at the Fore Street sidewalk location may need additional evaluation in locations where the curb line will be reset in a different location from its current placement.
4) Utility Connections

a. Ability to serve letters have not been provided for utilities impacted by the proposed project, but have been requested by the applicant for applicable utilities. The applicant has indicated that ability to serve letters will be submitted to Planning upon receipt.
b. It is understood that grease trap sizing is being reviewed by Department of Public Works. Applicant shall defer to comments from Department of Public Works on this item.
c. Details for the water system have been provided on Sheet C-202. Adherence to PWD standards is typically provided by the water utility for water connections, and would be addressed in an accepted ability to serve letter.
d. Details for the electrical conduit and natural gas pipe have been provided on Sheet C-200. Details and siting for the electrical transformer vaults was not provided.
e. Connection to Existing Stormwater Systems: E-mail, or otherwise written, confirmation from the Department of Public Works accepting this connection is requested to confirm that this connection is appropriate under Land Use section 14-526 (b) 3 a. (iv); and 14-526 (c) 3 a.

Portland Maine Yes. Google's good here.

Christian Roadman <croadman@portlandmaine.gov>

PL924-2019: 58 Fore Street

Bruce Hyman <bhyman@portlandmaine.gov> Thu, Nov 21, 2019 at 10:51 AM
To: Christian Roadman <croadman@portlandmaine.gov>
Cc: James Rather <jrather@portlandmaine.gov>, Tom Errico <thomas.errico@tylin.com>, Michael Tremblay <mtremblay@portlandmaine.gov>, Jeremiah Bartlett <jbartlett@portlandmaine.gov>

Good afternoon, Christian,

Here are my preliminary comments on the 58 Fore Street submittal - more may be forthcoming.

LD2.0 Landscaping

- Item 3. The applicant should submit manufacturers specifications related to the bike racks to be used for the outdoor racks - it is unclear based on the design detail sheet.

C-100 Site Plan

- Bike Racks. There should be a better distribution of outdoors bike racks (and possibly more given the event nature of some of the facilities) to be installed to serve visitors/customers throughout the site in proximity to and visible at primary/main building entrances (which are hard to determine).
- Transitions from 58 Fore St property to the relocated rail/MaineDOT and Eastern Prom pathway alignments. It is unclear what the character of these wide open spaces will be like. There are wide swaths of asphalt between the 58 Fore Street property (pavers surface) and the asphalt area (~100'). This asphalt area also abuts the area shown to be fenced in areas of reclaim pavement (~225' along the property line) which shows a 'planting area' of salt tolerant grass seed between the rail line and the reclaim area within the DOT ROW.

TDM Plan

- The TDM Plan is generally vague and weak on the types of actual programs/incentives that will be offered and in its commitments. This can be difficult at this stage but with at least one known larger office tenant/employer, more commitments can and should be provided in the plan. The city can provide examples of recent more robust TDM plans for review by the applicant team.

Please don't hesitate to contact me if you, the Board or the applicant have any questions.

Bruce
--
Bruce Hyman
Transportation Program Manager

Department of Planning & Urban Development
389 Congress Street
Portland, Maine 04101
(207) 874-8717 phone

bhyman@portlandmaine.gov
http://www.portlandmaine.gov/1363/Transportation-Division
http://www.portlandmaine.gov
Yes! Transportation's Good Here ....

Planning and Urban Development Department
Planning Division

Subject: B6 Design Review for Phase I – 58 Fore Street

Written by: Caitlin Cameron, Urban Designer

Date: Wednesday, November 20, 2019

Design Review Criteria:
For the first workshop, staff would like to call to the attention of the Planning Board members the applicable design standards to be applied during this Site Plan review. Staff outlines the priorities and areas most critical to meeting the Design Manual objective of development that supports the Eastern Waterfront as an urban neighborhood with emphasis on density, mixed-uses, and pedestrian-friendliness.

The Board members are encouraged to become familiar with the project with these criteria in mind. Staff welcome Board questions and comments guiding staff where to direct attention as the review process continues in more detail.

The Site Plan application is subject to the policies and standards listed below.

1. City of Portland Design Manual – *(g) EWPZ Eastern Waterfront Port Zone and B6 Eastern Waterfront Mixed Use Zone*
2. Proposed Design Parameters – *Master Development Plan for 58 Fore Street*
3. Eastern Waterfront Master Plan - *Design Guidelines for the Eastern Waterfront*

1. **City of Portland Design Manual –** *All major and minor development reviewed under the provisions of the eastern waterfront zones shall be designed to support the development of this urban neighborhood as a dense, mixed-use, pedestrian friendly neighborhood.*
   - In regards to density: The project size is substantial and will be adding density to this area in office workers and residents. The first phase has more emphasis on commercial, retail, and event uses. Future phases will bring more residential density.
   - In regards to mixed-uses: The project includes a mix of uses, including more active retail uses on the ground floor with office, event spaces, and residential on upper floors. The goal would be for a mix of uses that allows for and encourages activity throughout the day and seasons.
   - In regards to pedestrian-friendliness: Staff find the overall layout and circulation to promote pedestrian circulation and wayfinding. The building placement, entrances, and architecture contribute to legibility and wayfinding throughout the site. The applicant team has thought about the priority viewsheds and corridors where activity is most critical. The public edges and easement area of the project require some more review and scrutiny especially to evaluate how this complex fits into the overall neighborhood in character but also visual and physical connections.

2. Proposed Design Parameters:
The following design parameters were developed from the *Design Guidelines for the Eastern Waterfront*, to guide future Site Plan applications and should be taken into consideration in order to meet the design criteria at a Site Plan level of detail:

Appropriate Street Design: The new internal street shall use design treatments that encourage flexible and shared-use space with the potential for frequent pedestrian crossing and occupation. Design development should treat the street as a shared space with slow vehicle speeds and pedestrian comfort, especially at those points where pedestrians will want to cross to the water's edge. Surface parking spaces should be adequately screened from public view.

- Staff are generally supportive of the treatment of the internal street as a shared space delineated with bollards and differentiated paving.

Sidewalks: Public sidewalk design shall be coordinated with City staff to ensure a cohesive and attractive public realm.

- Staff need further review of the sidewalks seeking a balance of landscape/planting with passable sidewalk widths in proportion to the building scale and street widths. Some sidewalks seem quite narrow in this regard. Street trees and plantings are provided between the sidewalk and the residential buildings – this is logical to provide a transition and privacy interface but staff question the viability of the trees and plantings in these locations – edge treatments and interactions with utilities should be considered.
- Staff typically recommend new development provide a streetscape design consistent with existing patterns. The developing pattern on this side of the street is to place landscape between the sidewalk and the private property.

Contextual Design – The MDP proposal presents a cohesive design approach to building forms, scale, massing, and façade treatment. The approval of this MDP does not indicate an approval of specific design treatments or detail. The design approach is clearly contemporary, which is encouraged. The review of materials, articulation, aesthetic or style will be a part of the Site Plan approval process with an emphasis on appropriateness in response to their context and compatibility with surrounding neighborhoods.

- Staff recognize that the site is anomalous in its location, topography, former uses, and past development pattern compared with its surrounding context. The site mediates between the residential Munjoy Hill neighborhood defined by single family, two-family, and triple decker residential buildings, a small, pedestrian-scale street grid, and a "cinque terre" approach (meaning the development pattern follows the topography with Congress Street as the high point "spine" and Fore Street as the low point); the waterfront which currently includes a mix of transportation, industrial, and tourism uses and building typologies; and to the east, the context is the steep slope of the Eastern Promenade and public open space of Fort Allen Park and the Eastern Promenade Trail.
  The street grid and building pattern of Munjoy Hill terminates at Fore Street and the dramatic slope and change in topography of the MDP site physically sets the rest of the site apart from that Munjoy Hill context. In this case, the proposed building type, massing, and scale on Fore Street is designed to relate to the residential fabric of Munjoy Hill. From the Commercial Street approach at the western side of the site, where Fore Street has sloped down to a lower elevation, the proposed building scale is also low, typically 3 to 4 stories, to relate to the historic Portland Company architecture on-site as well as an acknowledgement of the commercial

waterfront building scale and orientation that exists along the waterfront (though that building context is not directly adjacent to the site).

- Additional information/views are needed to understand how these new buildings relate to the adjacent residential and commercial blocks.
- Staff request additional views or information about how the proposed buildings/streetscape design connects at the edges of the site. Fore Street, the Connector Road, and the trail are different contexts requiring different kinds of design.
- From the renderings, staff can assess how the new architectural relates to the historic buildings within the proposal area. The internal relationship to context is thoughtful and balanced allowing the new buildings to be distinct but subtle as a backdrop to the historic character. Staff are generally supportive of the design approach for building 1A as a subtle, contemporary backdrop to the historic buildings. Staff are concerned about the lack of articulation and human-scale elements, especially at the ground level. The material and color palette of the new architecture coordinates well with the historic structures and conveys a complex while keeping the contemporary buildings clearly as an expression of their own time. The proportions of openings, the fine-grain materials, the simple forms help to relate these larger, contemporary buildings to the context.
- Staff observe that in some locations, there is a variety of styles proposed within a single vantage point – coordinated and simplified character is recommended. For example, similar character and design treatment of residential buildings in contrast with the historic buildings or the public stairs to convey the private nature of the uses in contrast with the other, more public uses.

Clear conveyance of the function and significance of buildings – Staff identified three opportunities to improve the legibility of the site in regards to building function and significance. First, the hotel use should be distinguished in character or form from the residential uses. Second, on Fore Street the transition from residential uses to the historic Portland Company buildings and public easement access should reflect in the streetscape experience the change of use, the historic fabric, and public open space components. Third, on the new street extension, the building edges should be designed to differentiate the residential from the office uses which will also provide some variation and visual interest to the less active streetscape.

- In preliminary review, the buildings are designed to give clear conveyance of the function and distinguish between uses.
- The differentiation of public versus private uses is being well conveyed in the architecture, especially related to the public stair and the more active, retail locations.

Building Interface with Pedestrian Environment: Buildings shall engage the street and be designed with consideration for the impact on the pedestrian environment, especially in the case of Fore Street, the new public street, and the trail. Massing, scale, and articulation should create comfortable and active spaces. Specifically, articulation can be used to provide a human scale, break up the length of the building at grade, and mitigate the impact of the building height making the space more comfortable. Articulation on the new street extension facades should also be employed to provide a visually interesting street wall. Comfort in the pedestrian environment should also consider wind and shadow impacts. The design development of garages should meet the guideline in terms of achieving a visually attractive pedestrian environment, with the expectation that the articulation and materials will be compatible with the new and existing buildings.

- Is it acceptable for the connector road to be treated like a B-street with less activity, grade changes, minimal transparency, entrances, or public-facing uses?

- More consideration is needed regarding active edges versus more private edges – is the amount of active retail frontage proposed feasible? Where are the active edges most critical?
- Staff supports public, accessible viewing opportunities and a realistic approach to the pedestrian environment that provides scale and comfort, opportunities for sun and shade.
- Careful consideration of where to appropriately introduce landscape and plantings versus hardscape – industrial past versus contemporary uses and comfort.
- More articulation and scaling elements may be appropriate to create a sense of enclosure and pedestrian-level comfort.

Entrances – Pedestrian building entrances shall be oriented towards streets whenever possible. Service entrances should be internal to the site with shared infrastructure whenever possible.

- Staff seek more emphasis and legibility of entrances, especially distinguishing retail/active uses from more private office and residential uses.
- Staff support the treatment of the Connector Road as a B-street with less activity and engagement to the street. However, further evaluation and feedback should be provided regarding the orientation, emphasis, and legibility of the various entrances and their relationship to site and public way circulation for the whole site.

Public Access Easement Design: The public easement through the site provides visual and physical connections to and through the site and to the public trail and waterfront. Design of the public easement entrance on Fore Street shall be revised to provide accessibility and increased viewing opportunities in that location, as well as enhanced streetscape treatment for the public to appreciate and experience the historic building complex and the waterfront.

- Staff suggest equal accommodation/universal design of the easement to the extent possible
- The landscape placement should relate to sight lines and desire lines through the site. It appears some of the trees and landscaping might interfere with natural movements through this public space.
- The benches/seating opportunities should be designed to orient to circulation and viewing in both sun and shade conditions.

Water's Edge: The MDP successfully meets the B6 design criteria regarding the water's edge. Future coordination will be required to integrate the design of the public and private waterfront properties in a way that is seamless and creates an enhanced public experience of the trail and waterfront access. Consideration shall be given to the pedestrian level facades, buffers, and other design techniques that shall be utilized to transition between the waterfront and the upland development.

- The interaction with the trail is a critical public-facing component of the site plan. Staff are concerned about the functional/back-of-house components of buildings facing towards this well-used trail.
- Additional screening may be desired due to the proximity to the trail, though the impact of 10 parking spaces is not of high concern to staff.
- What is the site treatment of the future phases as they relate to the trail? What is the experience of those vacant areas. How will those interfaces be treated in the event that future phases are not built?
- Staff request more information about the elevations and views of the buildings from the trail.

Portland Maine Yes. Google's good here.

Christian Roadman <croadman@portlandmaine.gov>

58 Fore Street: Inclusionary Zoning Conditional Use

Victoria Volent <vvolent@portlandmaine.gov> Wed, Dec 4, 2019 at 2:20 PM
To: Christian Roadman <croadman@portlandmaine.gov>

Hi Christian,

The applicant has indicated they intend to pay the fee-in-lieu for the proposed 14 residential units at 58 Fore Street.

The fee-in-lieu for the 14 residential unit project would be 1.4 X $106,909 or $148,526. The fee-in-lieu would be paid prior to issuance of the certificate of occupancy.

Please let me know if I may be of further assistance.

Thank you,

Victoria

Victoria Volent
Housing Program Manager
Housing and Community Development
Phone: 207-482-5028
Fax: 207-874-8949
www.portlandmaine.gov

Portland Maine Yes. Google's good here.

Christian Roadman <croadman@portlandmaine.gov>

58 Fore Street Landscape

Jeff Tarling <jst@portlandmaine.gov> Mon, Nov 25, 2019 at 4:34 PM
To: Christian Roadman <croadman@portlandmaine.gov>

Hi Christian -

In review of the tree & landscape plans for 58 Fore Street, wanted to offer the following comments:

a) Landscape theme - we often see a wide variety of trends for site planning projects, 58 Fore Street since it is such a large, prominent space on the Portland Waterfront would like to share some desired concepts. Too often we see trees and landscape that can be 'anywhere USA', we know the project team also wants to reflect a vibrant site that reflects or identifies 'Portland Maine'. In the quick view of the proposed plan we do see the inclusion of native plants, Nyssa, Red Maple, Amelanchier for example - which is good. Our recommendation would be to strengthen that effort to the extent possible. 'Groves' of plants (trees & shrubs) where appropriate vs single trees, we note the existing line of Grey Birch near the MNGRR and the inclusion of Grey Birch on the proposed plan. Nearby at the Ocean Gateway the island of Amelanchier and Blueberry has been an attractive, low maintenance landscape feature that speaks 'Maine'. Thus trees, shrubs and herbaceous plant material that are native and conducive to the shoreline are encouraged.

b) Tree & Landscape - Root Zone and protection measures, as the project design evolves and is refined we would like to see measures included to ensure that the plants have adequate root zone space to grow and protection measures like low granite curbing to protect planting spaces from deicing salts and compaction. Thoughtful approaches to Winter snow & ice management, where does the snow get plowed to and the impact of winter to the landscape planned in. The proposed landscape plan calls for several larger, 4-5" caliper trees which to be successful needs designed in soil volume,(see below recommendations) and the project should have space available if prioritized.

SOIL VOLUME FOR TREES

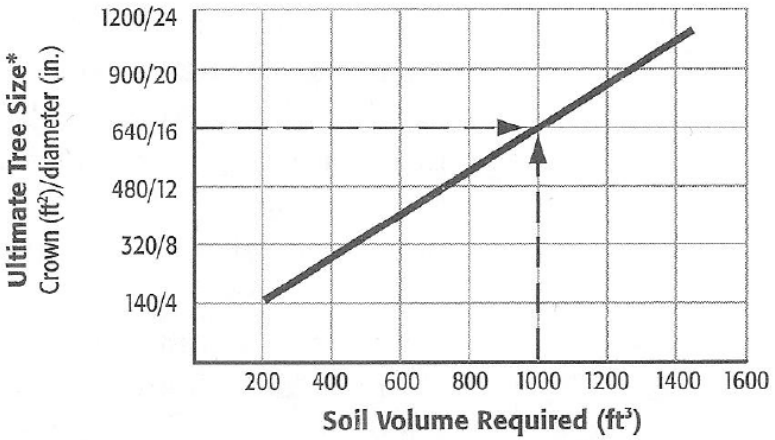

* The ultimate tree size is defined by the projected size of the crown and the diameter of the tree at breast height.

Note
For example, a 16 in. diameter tree requires 1000 cu ft of soil.

c) Stormwater // Green Infrastructure - Will the project be using any stormwater green infrastructure as part of their plan?

d) Fore Street Streetscape - We should evaluate the best treatment for the Fore Street edge. Unsure of underground & overhead utilities, sidewalk width and grading. More info is needed.

Thanks

Jeff

Jeff Tarling
City Arborist - City of Portland Maine
Parks, Recreation & Facilities Department
Forestry & Horticulture
212 Canco Road
Portland, ME. 04103
(207) 808-5446
jst@portlandmaine.gov

Att. A

PORTLAND FORESIDE DEVELOPMENT – PHASE 1

LEVEL III SITE PLAN

58 Fore Street
Portland, ME

41 Hutchins Drive
Portland, ME 04102
800-426-4262

woodardcurran.com
COMMITMENT & INTEGRITY DRIVE RESULTS

0227007.16
Portland Foreside Development Company
November 2019

TABLE OF CONTENTS

SECTION			PAGE NO.
1.	**APPLICATION CHECKLIST**		**1-1**
2.	**APPLICATION FEES**		**2-1**
3.	**PROJECT SUMMARY**		**3-1**
	3.1	Permit Summary	3-1
	3.2	58 Fore Street Master Development Plan	3-1
	3.2.1	Minor Amendments to the Master Development Plan	3-2
	3.3	Phase 1 Project Description	3-3
	3.4	Attachments	3-6
4.	**WAIVER REQUESTS**		**4-1**
	4.1	Attachments	4-1
5.	**EVIDENCE OF RIGHT, TITLE & INTEREST**		**5-1**
	5.1	Attachments	5-1
6.	**EASEMENTS AND OTHER BURDENS**		**6-1**
	6.1	Attachments	6-1
7.	**EVIDENCE OF STATE AND/OR FEDERAL APPROVALS**		**7-1**
8.	**EVIDENCE OF FINANCIAL & TECHNICAL CAPABILITY**		**8-1**
	8.1	Financial Capability	8-1
	8.2	Technical Capability	8-1
	8.3	Attachments	8-1
9.	**CONSISTENCY WITH PORTLAND DESIGN STANDARDS**		**9-1**
	9.1	Transportation	9-1
	9.2	Environmental & Landscape Features	9-2
	9.3	Environmental & Stormwater	9-3
	9.4	Public Infrastructure & Safety	9-3
	9.5	Site Design	9-3
	9.6	Attachments	9-5
10.	**ZONING ASSESSMENT**		**10-1**
	10.1	Attachments	10-1
11.	**CONSISTENCY WITH CITY COMPREHENSIVE PLAN**		**11-1**
	11.1	Comprehensive Plan Vision Statement	11-1
	11.2	Comprehensive Plan Policy Guides	11-3
	11.3	Eastern Waterfront Master Plan	11-5
	11.4	Design Guidelines for the Eastern Waterfront	11-6
12.	**CONSTRUCTION MANAGEMENT PLAN**		**12-1**
	12.1	Attachments	12-1

13. BOUNDARY SURVEY 13-1

13.1 Attachments 13-1

14. AVAILABILITY & ADEQUACY OF PUBLIC UTILITIES 14-1

14.1 Water 14-1
14.2 Sewer 14-1
14.3 Gas 14-1
14.4 Electric 14-1
14.5 Solid Waste 14-1
14.6 Construction & Demolition Debris 14-1
14.7 Special & Hazardous Waste 14-2
14.8 Attachments 14-2

15. PORTLAND FIRE DEPARTMENT SITE REVIEW CHECKLIST 15-1

1. APPLICATION CHECKLIST

CITY OF PORTLAND
Planning & Urban Development Department

LEVEL II and LEVEL III SITE PLAN
GENERAL DOCUMENT AND DRAWINGS CHECKLIST
Please submit each document as a separate PDF file
Please confirm by electronically checking the boxes to the left

** PLEASE FILL OUT AND UPLOAD SEPARATELY THE ZONING TABLE AND WAIVER TABLE AS NOTED BELOW **

GENERAL APPLICATION DOCUMENTS	
Yes ☑ NA ☐	**Project Description** • Cover Letter with detailed project description
Yes ☑ NA ☐	**Completed Checklist – Level I: Site Alteration** (this document)
Yes ☑ NA ☐	**Right, Title and Interest** • Deeds, leases, or purchase and sales agreements
Yes ☑ NA ☐	**Evidence of State or Federal Approvals** • Permits or letters of non-jurisdiction, if applicable
Yes ☑ NA ☐	**Zoning Assessment** • Table listing required and proposed uses and dimensional standards Zoning Assessment Table
Yes ☑ NA ☐	**Existing and/or Proposed Easements or Covenants, applicable.** • Evidence of existing easements and any proposed easements
Yes ☑ NA ☐	**Waiver Requests** • Written request for waiver describing request and reason Waiver Table
Yes ☑ NA ☐	**Financial Capability** • Letter or evidence from a financial institution or third party verifying financial capacity to undertake project
Yes ☑ NA ☐	**Technical Capability** • Evidence of technical capability of applicant and consultants – resumes and/or examples of past projects

LEVEL II AND LEVEL III SITE PLAN
STANDARDS AND SUBMISSION CHECKLIST

Provide assessment of compliance with standards and include supplemental documentation, as applicable
Please Submit each document as a separate PDF file

TRANSPORTATION

Yes	NA	
☑	☐	**Transportation Analysis- Traffic Impact (14-526 (a) 1)** • Provisions for pedestrian, bicycle, vehicle, and loading circulation and incremental volume of traffic impacts • Traffic Impact Study (Technical Manual, Section 1) if applicable
☑	☐	**Access and Circulation (14-526 (a) 2 a)** • Access and internal circulation, addressing ADA access • Access and egress impacts on traffic flows • Description and use of drive-up features, if applicable
☑	☐	**Loading and Servicing (14-526 (a) 2 b)** • Loading and servicing needs, route and travel way geometrics for deliveries • Turning templates for delivery vehicles, if applicable
☑	☐	**Sidewalks (14-526 (a) 2 c)** • Sidewalks and condition along street frontages and internal walkways • Engineered details for ADA ramps and public sidewalk details meeting sidewalk materials policy and ADA ramp construction details as applicable (Technical Manual, Section 1)
☑	☐	**Public Transit (14-526 (a) 3), if applicable** • Existing available transit services • Proposed site plan design details, such as easement, pad base, and shelter
☑	☐	**Off-Street Parking: Vehicle & Motorcycle/Scooter) (14-526 (a) 4 a and c)** • Expected parking demand, proposed parking supply, ADA parking, and applicable Zoning Requirements • Address Technical Manual standards (Section 1) for curb cut separation and parking lot layout and locate on site plan
☑	☐	**Bicycle Parking (14-526 (a) 4 b)** • Address bicycle parking requirements and identify locations on-site • Construction details for bike racks (Technical Manual, Section 1)
☑	☐	**Snow Storage (14-526 (a) 4 d)** • Management plan for snow removal and locate snow storage areas on plan
☑	☐	**Traffic Demand Management (TDM) (14-526 (a) 5), if applicable** • Develop TDM with Trip Reduction Targets and Strategies

ENVIRONMENTAL AND LANDSCAPE FEATURES	
Yes NA ☑ ☐	**Preservation of Significant Natural Features (14-526 (b) 1), if applicable** • Trees, plants, habitats listed on State or Federal list of endangered or threatened • High and moderate value waterfowl and wading habitat • Aquifers on Casco Bay Islands • Waterbodies (including wetlands, watercourses, significant vernal pools and floodplains) • Proposed preservation areas and protection measures • Documentation from environmental consultants, determinations from applicable state agencies
Yes NA ☑ ☐	**Landscaping and Landscape Preservation (14-526 (b) 2 a)** • Preservation of trees and preservation within required zoning setbacks (Technical Manual, Section 4) • Protection measures of existing vegetation during construction • Protection measures within Shoreland Zone, if applicable
Yes NA ☑ ☐	**Site Landscaping (14-526 (b) 2 b)** • Screening and buffering of service areas and between non-residential and residential uses • Planting plans with plant schedule and sizes (Technical Manual, Section 4)
Yes NA ☐ ☑	**Parking Lot Landscaping (14-526 (b) 2 b ii), if applicable** • Landscaped islands within parking areas (Technical Manual, Section 4)
Yes NA ☑ ☐	**Street Trees (14-526 (b) 2 b iii)** • Existing Heritage or Feature Trees on site and measures to preserve • Identify street trees on the plan meeting the site plan and Technical Manual standards (Section 4) or identify alternative measures, if applicable
ENVIRONMENTAL AND STORMWATER	
Yes NA ☑ ☐	**Water Quality, Stormwater Management and Erosion Control (14-526 (b)3 a)** • Stormwater report in compliance with Section 5 of Technical Manual and DEP Chapter 500 stormwater for basic, general and flooding standards, as applicable • Erosion control plan and measures • Evidence of compliance with Urban Impaired Stream Standards pursuant to DEP Chapter 500 stormwater, as applicable • Subsurface sanitary sewage disposal and groundwater protection

PUBLIC INFRASTRUCTURE AND SAFETY	
Yes ☑ NA ☐	**Consistency with City Master Plans (14-526 (c) 1)** • Identify consistency with master plans • Proposed easements, rights and improvements to connect or continue off-premises public infrastructure, as applicable
Yes ☑ NA ☐	**Public Safety and Fire Prevention (14-526 (c))** • Address Crime Prevention through Environmental Design (CPTED) (Technical Manual, Section 3) • Emergency vehicle access • Address consistency with public safety standards (Technical Manual, Section 3) • Submit a code summary referring NFPA 1 and all Fire Department standards (Technical Manual, Section 3) – Fire Checklist
Yes ☑ NA ☐	**Availability and Adequacy of Public Utilities (14-526 (c) 3) (Technical Manual, Sections 2 & 9)** • Electrical services, including providing underground services • Identify existing and proposed connections for public utilities and required public utility upgrades • Sewer line connections are required, if there is a main within 200 feet • Proposed solid waste management facilities on-site and management for the site • Written evidence of the ability to serve from utility companies, as applicable
SITE DESIGN	
Yes ☑ NA ☐	**Massing, Ventilations and Wind Impact (14-526 (d) 1)** • Wind and ventilation impacts on adjoining structures and/or adjacent public spaces. Wind study, if applicable • Bulk, location or height impacts on adjoining structures • Identify and locate HVAC equipment and venting away from public spaces and residential properties • Identify screening and manufacturing specifications for noise, if applicable
Yes ☑ NA ☐	**Shadows (14-526 (d) 2), if applicable** • Shadow analysis of impacts on publicly accessible open space (Technical Manual, Section 11)
Yes ☑ NA ☐	**Snow and Ice Loading (14-526 (d) 3)** • Building design to prevent snow and ice from loading or falling onto adjacent properties or public ways
Yes ☑ NA ☐	**View Corridors (14-526 (d) 4), if applicable** • Protection of designated view corridors (Portland Design Manual, Appen. 1)

Yes ☑ NA ☐	**Historic Resources (14-526 (d) 5), if applicable** • Identify developments within Historic Districts or affecting Designated Landmarks • Certificate of Appropriateness or other evidence • Identify Developments within 100 feet of Historic Districts or affecting Designated Landmarks. Advisory HP review may be required • Address preservation and documentation of Archaeological Resources
Yes ☑ NA ☐	**Exterior Lighting (14-526 (d) 6)** • Cut sheets of on-site light fixtures and any architectural or specialty lights (Technical Manual, Section 12) • Engineered details for any lights proposed in street right-of-way (Technical Manual, Section 10)
Yes ☑ NA ☐	**Noise and Vibration (14-526 (d) 7)** • Evidence of noise levels for equipment, such as equipment specifications, to demonstrate consistency with zoning requirements
Yes ☑ NA ☐	**Signage and Wayfinding (14-526 (d) 8), if applicable** • Signage plan showing the location, dimensions, height and setback of all existing and proposed signs. Signs in Historic Districts are reviewed by Historic Preservation staff • Proposed commercial and directional signage on site
Yes ☑ NA ☐	**Zone Related Design Standards (14-526 (d) 5)** • Address Historic Preservation Design Review, if applicable • Address any applicable design review standards by zone • Address submission requirements from Design Manual, page 1, addressing neighborhood context • Description of exterior materials, color, finish, and samples
Construction Management Plan	
Yes ☑ NA ☐	**Construction Management Plan** • Construction Management Document and Plan

LEVEL II AND LEVEL III SITE PLAN
DRAWINGS CHECKLIST

Please upload the following DRAWINGS with the listed details into e-Plan as separate pdfs

RECENT BOUNDARY SURVEY (stamped by Maine Licensed Surveyor)

- ☑ Must be in compliance with Technical Manual, Section 13

SITE PLAN(s) (stamped by Maine Licensed Engineer) including:

Existing Conditions

- ☑ Approximate location of structures on abutting property
- ☑ Topography
- ☑ Locate water courses (Fore River)
- ☑ Delineate wetlands (Fore River)
- ☑ Zone lines

Proposed Site Plan

- ☑ Ground floor area, and grade elevations for all buildings

Access, Circulation, and Parking

- ☑ Streets and intersections adjacent to site, any proposed geometric modifications
- ☑ Location, dimensions and materials of all existing and proposed driveways, vehicle, bicycle, & pedestrian access ways with corresponding curb lines
- ☑ Engineered specifications/ cross-sections for proposed driveways, sidewalks & paved areas
- ☑ Location and dimensions of proposed loading areas
- ☑ Existing and proposed transit infrastructure with dimensions/ engineering specifications
- ☑ Location of vehicle and bicycle parking with dimensions and engineering specifications

Site Considerations

- [x] Identify snow storage areas
- [x] Location of fire hydrants
- [x] Location of solid waste management facilities

UTILITY PLAN including:

- [x] Existing utilities on site and within public streets
- [x] Location, sizing and directional flows of all existing and proposed utilities
- [x] Location and dimensions of off-premises public or publicly accessible infrastructure adjacent to site
- [x] Electric utility infrastructure

GRADING AND DRAINAGE PLAN including:

- [x] Existing grades and drainage
- [x] Proposed grades
- [x] Proposed stormwater management meeting Technical Manual (Section 5), standards
- [ ] Location and proposed alteration of a water course
- [ ] Preservation or alteration of wetlands

EROSION CONTROL

- [x] Must be in compliance with Technical Manual, Section 5

LANDSCAPE PLAN including:

- [x] Existing vegetation to be preserved and preservation measures
- [x] Proposed landscaping and buffers
- [x] Planting schedule

RECORDING PLAT, if applicable

- [x] If Subdivision, must be in compliance with requirements of Section 14-496 (b)

ARCHITECTURAL PLANS AND RENDERINGS including:

- [x] Exterior building elevations, color renderings, illustrations of all sides
- [x] Location and dimensions of all existing and proposed HVAC and mechanical equipment, all proposed screening
- [x] Provide context drawings, if applicable (Design Manual, page 1)
- [x] Floor plans

2. APPLICATION FEES

A check for the required application fee(s) will be provided to the Planning Department. It is our understanding that the application fee includes:

• Level III Site Plan Over 300,000 SF	$7,000
• Site Location of Development Permit	$3,500
• Site Location of Development x 9 lots	$1,800
• Subdivision	$500
• Subdivision x 10 Lots	$225
TOTAL:	$13,025

(Note: We understand that the $1,600 parking lot fee is not currently being charged, but we will be notified separately if it is determined that a parking garage qualifies for this fee.)

3. PROJECT SUMMARY

On behalf of Portland Foreside Development Company (Applicant), Woodard & Curran is submitting a Level III Site Plan Application to construct Phase 1 of the 58 Fore Street Master Development Plan. A letter authorizing Woodard & Curran to act at the agent on behalf of the Applicant is attached to this Section. The project Site is located at 58 Fore Street in Portland, Maine, on three parcels of land identified by the City Tax Assessor as Tax Map 18, Lots A001, A002, and A013 and is partially located within a FEMA Flood Zone, as shown by the attached maps. Additional work associated with the project will be completed on the abutting lots owned by the City of Portland and a Right-of-Way owned by the Maine DOT and utilized by the Maine Narrow Gauge Railroad. The proposed work is shown on the drawings and renderings included with this application.

3.1 Permit Summary

As noted above, this project is being submitted for Site Plan Approval from the City of Portland. The project's size and scale qualify it for a Level III Site Plan that will be reviewed and approved by the Planning Board. The project's location partially within a Flood Zone requires a Flood Hazard Development Permit.

This application includes the subdivision of the 58 Fore Street property into 9 development parcels with utility and access space held in common with reciprocal easements granted to the proposed parcels. A subdivision plan prepared by Owen Haskell, Inc. is included with the project drawings.

The project is subject to the Maine Department of Environmental Protection (DEP) regulations for a Site Location of Development Act (SLOD) or Site Law Permit. It is our understanding that the project will be reviewed by the City of Portland under their Delegated Review Authority. A separate SLOD permit application has been provided with this Site Plan Application, and 3 paper copies have also been provided for the City to give to the Maine DEP.

3.2 58 Fore Street Master Development Plan

The proposed development is the first phase of the 58 Fore Street Master Development Plan, unanimously approved by the Planning Board (Project ID: 2016-224) on December 22, 2016, to redevelop and revitalize the 10-acre former Portland Company complex into a mixed-use development. The Master Development Plan consists of six "blocks" of development with open space plazas, public access easements, view corridors to the water and a private roadway that provides shared access for both vehicular and pedestrian traffic through the Site.



Figure 3-1 Master Development Plan Blocks

A seventh block was included in the Master Development Plan for an adjacent marina (Fore Points Marina). The marina has been previously permitted and construction was completed in 2019. While the marina is located on a separate parcel directly to the south, it will be integrated into the operation of the Portland Foreside Development.

The overall Master Development Plan focused on the redevelopment and revitalization of the former Portland Company complex into a mixed-use neighborhood to encourage year-round use by the greater community. The overarching vision is to redevelop the 10-acre site so it can reach its potential as a revitalized waterfront neighborhood with a vibrant and diverse mix of uses.

The Project Site previously served as a pre-Civil War locomotive manufacturing site and components of that past still stand today. Historically significant facades include the Portland Company Vault, the Machine Shop, the Boiler House/Brass Foundry and the Blacksmith Shop. The development team has included these historic buildings, along with the character and linear orientation of the alleyways between, in the redevelopment planning for the site.

The Phase 1 development of 58 Fore Street is a critical piece to Portland's future for a number of reasons including:

- The overall Project Site is large (+/- 10 acres) and strategically located between Portland's vibrant downtown, its working waterfront, and the beginning of its Eastern Promenade residential neighborhoods. Phase I will begin the connection of an underutilized part of the City to adjacent neighborhoods, the waterfront and the Old Port.

- The Project Site represents a keystone piece in the City's continuing efforts to link its vibrant downtown to the vast potential of its commercial waterfront. Phase 1 will help the City further realize the benefits of its investments in the Ocean Gateway marine terminal facility and related infrastructure;

- The development will help stimulate other investments in the eastern waterfront with the anticipation that investment in the Project Site will result in investment in underdeveloped public and private lands situated between the India Street neighborhood and the Project Site;

- As a whole, this proposed development presents an unparalleled opportunity to grow the City's tax base, add housing, and create jobs; and

- The development can act as a catalyst for change in this area, improve the quality of life for all Portland residents by facilitating access to the waterfront, adding capacity for events that draw residents and visitors and enable the City's cruise ship terminal to live up to its name as a truly memorable gateway.

The entire Master Development Plan was informed by the development considerations noted in the Eastern Waterfront Master Plan which include: the historic nature of the 19th century industrial complex; promoting the continuation of boat yard and yacht support services; adaptive reuse and sensitive rehabilitation of historic structures; increasing connections to Commercial Street; promoting shared parking with abutting onsite uses; and expanding recreational boating and active public use of the water. Phase 1 of the 58 Fore Street Master Development Plan includes these development considerations as well as components of Portland's Plan 2030.

The design intent of the entire Master Development Plan for 58 Fore Street is to provide vehicular and pedestrian access to the uses on the site while creating contemporary social spaces that are respectful of the site's industrial history, but also support the programmatic intent of the buildings.

3.2.1 Minor Amendments to the Master Development Plan

As part of the Level III Site Plan for Phase 1 of the 58 Fore Street development project, several minor amendments to the Master Development Plan have been made. The proposed location for Building 12 is in a different location than

what was shown on the approved Master Development Plan. The change in location allows for Building 12, an important historic resource, to be more visible and prominent on the site. We are requesting the following modifications to the 58 Fore Street Master Development Plan approved on December 20, 2016 be made:

- Relocation of Building 12 from its former position on the 58 Fore Street Master Development Plan (as shown by Figure 3-2, Building 12 was formerly intended to connect to Building 1A and, as shown on the design drawings, Building 12 is proposed to be located across the roadway); and
- Modification of the Portland Company Historic District boundary line within the Master Development Plan to be consistent with the new location of Building 12.

Portland Foreside Development Company received approval on February 6, 2019 (decision letter for Certificate of Appropriateness dated May 17, 2019) from the City of Portland Historic Preservation Board to amend the boundary of the Portland Company Historic District to reflect the revised relocation site for Building 12 and disassemble, reconstruct and relocate Building 12 to its new location. The decision letter from the Historic Preservation Board has been included as an attachment to this section for your reference.

Section 14-532(b)(1) of the City of Portland Land Use Code indicates that revisions to a Master Development Plan can be approved by the Planning Authority upon written application. The 58 Fore Street Master Development Plan approval letter dated December 22, 2016, also references this minor amendment process. Based on discussions with City Staff (Ms. Christine Grimando), we are documenting revisions to the Master Development Plan within this Level III Site Plan Application.

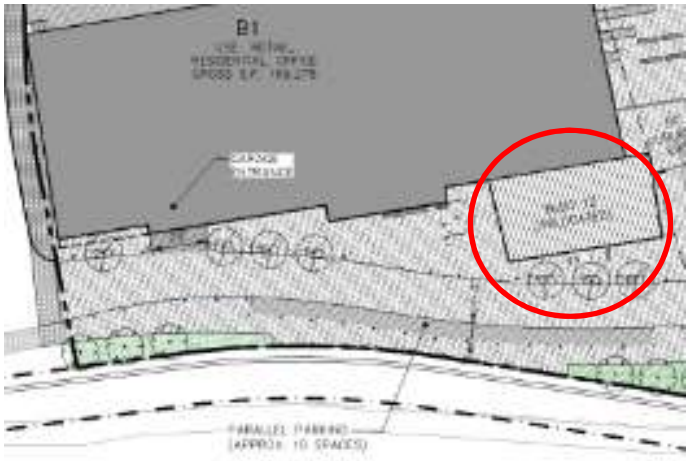

Figure 3-2: Former Building 12 Location Per Master Development Plan

3.3 Phase 1 Project Description

The redevelopment of 58 Fore Street into a mixed-use neighborhood highlights the historical significance of the area, access to the waterfront and provides a direct connection from the adjacent neighborhoods to the waterfront. The result is a vibrant revitalization of the City's eastern waterfront. The Phase 1 development program for the project was considered and designed around the overall vision of creating this mixed-use neighborhood and proposes commercial, residential, office, retail, restaurant, marina and public open space uses which are consistent with the Master Development Plan for the site. Open space proposed for Phase 1 includes plazas for pedestrian use between the individual building components as well as a public access easement, view corridors and access to the waterfront via a walkway along the water's edge.

Phase 1 of the 58 Fore Street Master Development Plan is focused on Block 1, Block 2, Block 4 and associated infrastructure which is advanced by the development program described below. For the purposes of our use and area evaluation, we have broken all building areas down into five area categories – residential, office, retail/service/restaurant, event, and parking. Within each block description below we give total areas for each of these uses, and these uses also relate to the uses evaluated within the traffic studies described further in this application.

Block 1

Block 1 marks a prominent entry point to the 58 Fore Street property from Thames Street for vehicles and pedestrians. Visitors are introduced to the revitalized area by the strong visual prominence of reconstructed historical Building 12 as they walk alongside ground-level retail associated with a new office building. Other points of entry are along the realigned Eastern Promenade Trail, which will have a closer connection to the waterfront, and through the public access easement which resides over an entry stair with adjacent public view vantage points that provides pedestrian access on the east side of Block 1 to the core of the abutting historic district.

Parcel 1A is the construction of a Class A office building with round floor retail on the south side and a single deck of parking. Parcel 1C highlights the reconstruction of Building 12 which was meticulously catalogued and disassembled with approval from Historic Preservation Board and will be rebuilt in the more prominent location detailed in the site plan with uses that include a fine dining restaurant, office space, and two residential units. The table below summarizes the uses and square footage amounts for each parcel associated with Block 1:

Use	Building 1A (Parcel 1A)	Building 12 (Parcel 1C)	Total Phase 1 Block 1
	Area (SF)		
Residential	N/A	3,200 (2 units)	3,200
Office	95,100	3,200	98,300
Retail/Service/Restaurant	9,300	3,200	12,500
Event	N/A	N/A	N/A
Parking	26,500 (70 spaces)	N/A	26,500
Total	**130,900**	**9,600**	**140,500**

Block 2

Block 2 is the Historic Core of the redevelopment project which highlights the adaptive reuse of 7 historic buildings from the former Portland Company complex. Along with the historic buildings, this block brings to life two alleys and two plazas that will serve pedestrians as they move throughout the site. The reuse of these 7 historic buildings for a market hall and ground floor retail will invigorate the neighborhood and provide a strong sense of place rooted in the masonry style and form of Portland's industrial past. Upper floors will be utilized primarily for event space, preserving the historic industrial character of the space, a visual element that patrons have enjoyed during many events that were hosted at this location in the recent past. A portion of the upper floors will also be utilized as office space. New residential townhomes along Fore Street will complement the retail, commercial and office uses. The redeveloped historic core reveals itself to pedestrians and vehicles by emphasizing openness and flexibility. Considerations for public access include a new staircase providing access from Fore Street to plaza spaces within the site that continue all the way down to the waterfront.

Parcels 2A, 2B and 2C are all associated with the renovation of the site's historic core buildings (Building 2, Building 3, Building 4, Building 6A, Building 6B, Building 24, Building 14, Building 15 and Building 16) into restaurant, office, residential and event space, along with a market hall that will showcase local food/beverage vendors, chefs, and

culinary focused entrepreneurs. The table below summarizes the uses and square footage amounts associated with Block 2:

Use	Block 2 (Parcels 2A, 2B, & 2C)
	Area (SF)
Residential	N/A
Office	12,400
Retail/Service/Restaurant	35,900
Event	17,900
Parking	N/A
Total	**66,200**

Block 4

Block 4 provides the initial levels of common, structured parking that will serve all uses associated with each development block at 58 Fore Street. Residential units and retail space along the western side of the garage are proposed during Phase 1 for Block 4. The structured parking built during Phase 1 will form the foundation for the future buildout of residential (above) and ground floor retail (south elevation) during Phase 2, along with an expansion of the parking in that future phase. Block 4 will provide the entire development with centralized parking to support the full buildout.

Parcel 4 is the construction of 5 levels of the parking garage with residential units, storage and retail on the west elevation. The table below summarizes the uses and square footage amounts associated with Block 4:

Use	Block 4 (Parcel 4)
	Area (SF)
Residential	12,900 (12 units)
Office	N/A
Retail/Service/Restaurant	1,100
Event	N/A
Parking	221,800 (652 spaces)
Total	**235,800**

Infrastructure, Utilities & Access Improvements

In addition to the Block development, shared street infrastructure and utilities will be installed throughout the site in the common spaces between the development parcels with reciprocal easements granted throughout." The Phase 1 infrastructure will support the proposed development in Blocks 1, 2, and 4. The Phase 1 work will also include the adjustment of the Maine Narrow Gauge Railroad and the Eastern Promenade Trail to be located closer to the water, as well as access improvements on property owned by the Maine DOT and City of Portland.

The Phase 1 development focuses on encouraging public access to the site in a number of locations, and specifically focuses on the 50' public access easement. Pedestrians will be encouraged to access the site via a public staircase from Fore Street directly down to the plaza space between Block 1 and Block 2. In addition, the design compliments the staircase by providing for an expansive public upper viewing area and public lower plaza area to provide for the enjoyment of views of both the rehabilitated buildings of the Portland Company Historic District and Casco Bay.

In order to create a complete, functional site at the completion of Phase 1, interim conditions are proposed in areas of the site that will not see their finished conditions as part of this project including:

- Block 1 – Grading and loam and seed on Parcel 1B.
- Block 3 – Grading and repaving in Parcel 3 to provide temporary access to the adjacent Fore Points Marina.
- Blocks 5 and 6 – Minor surface improvements, grading, and utility work within Parcel 5 to enable the surrounding work. No development is proposed in association with these blocks as part of Phase 1.

3.4 Attachments

- Agent Letter
- Location Map
- Tax Map
- FEMA Map
- City of Portland Historic Preservation Board February 6, 2019 Certificate of Appropriateness
- Civil, Landscape, & Architecture Design Plans (uploaded to Drawings folder in Eplan)
- Subdivision Plan (uploaded to Drawings folder in Eplan)
- Architectural Renderings (uploaded to Drawings folder in Eplan)

FORESIDE
PORTLAND, MAINE
254 Commercial Street, Suite 118, Portland, Maine 04101

July 25, 2019

RE: Portland Foreside Development Company LLC – Agent Authorization

To Whom It May Concern:

Woodard & Curran will be acting as our agent for all local, state, and federal permitting associated with the Portland Foreside Development Company LLC project located at 58 Fore Street in Portland, Maine.

Please contact our project manager, David Senus, if you have any questions, 207.517.1102.

Sincerely,

Casey Prentice
Manager
Portland Foreside Development Company



FIGURE 1

SITE LOCATION

PORTLAND FORESIDE PHASE 1
58 FORE STREET
PORTLAND, MAINE

Legend

Site Location

0 500 1,000 2,000 Feet

N

WOODARD &CURRAN

Project #: 227007.09
Map Created: February 2019

Figure Exported: 2/11/2019 By: nkatsiaficas Using: C:\Users\nkatsiaficas\OneDrive - Woodard & Curran_PCFolders\Desktop\58 Fore St\Figure 1 -58 Fore St Site Location.mxd

Third Party GIS Disclaimer: This map is for reference and graphical purposes only and should not be relied upon by third parties for any legal decisions. Any reliance upon the map or data contained herein shall be at the users' sole risk. **Data Sources:** USGS

GILBERTS LN
MUNJOY ST
ATLANTIC ST
EASTERN PROM
ST LAWRENCE ST
FORE ST
WATERVILLE ST
ADAMS ST
MUNJOY SOUTH
THAMES ST
016 E022
016 F012
016 F001
016 F002
016 F025
016 F003
016 C018
016 C019
016 C017
016 C020
016 C012
016 C021
016 C013
016 C022
016 C023
ISABELLE CONDO
8839
003 O014
016 F013
016 F014
016 F015
016 F004
016 F005
016 F006
016 F007
016 F008
016 F009
016 F010
016 F011
016 F022
016 F023
016 F024
CASCO BAY CONDO
5890
016 J001
016 J002
016 J003
016 J016
016 J017
WATERVILLE STREE CONDO
3204
016 J005
016 J006
016 J007
016 J020
016 J021
016 J022
016 J023
016 J024
016 J008
GOOD YELLOW HOUSE CONDO
016 J009
016 J010
016 J011
016 J012
016 J025
016 J026
016 F016
016 F017
016 F018
016 F019
016 F020
016 J015
017 E041
017 E034
017 E040
017 E035
017 E036
017 G007
002 A004
002 A002
16300
002 A003
25500
002 A010
4508
002 A007
002 A014
002 A017
002 A016
002 A018
20608
002 A020
9370
002 A022
002 A019
11440
001 C003
001 C005
001 C004
002 X001
018 A001
018 A002
018 A013
52376
381942
446 A003
18600
446 A004
304290
446 A001
446 A002
374692
019 A010
019 A014

1 inch = 50 feet


G10NW
G10NE
G11NW
G10SW
G10SE
F10NW
F10NE
F11NW
CUMBERLAND AVE
CONGRESS ST
PONCE ST
MONUMENT ST
KELLOGG ST
SHERIDAN ST
SHERBROOKE ST
GILBERTS LN
HOYTS LN
ST LAWRENCE ST
WATERVILLE ST
ADAMS ST
MUNJOY SOUTH
WASHINGTON AVE
MOUNTFORT ST
FEDERAL ST
NEWBURY ST
FORE ST
HANCOCK ST
105 CONGRESS ST CONDO
HACIENDA CONDO
JOHN FORD HOUSE CONDO
11 SHERIDAN ST CONDO
WATERVILLE STREE CONDO
CONG FHARRAIGE CONDO
44 FEDERAL STREET CONDO
CITY
379,092
230,107
1 inch = 50 feet

G10SE | G11SW | G11SE

F10NE | G/NE

018 A001

58 10

018 A013

019 A010

87.18 | 137.3 | 137.25 | 225 | 169.54

018 A002

446 A003

374692

446 A001

40432

019 A014

019 A015

Street ID 14-21

80 - 136
79 - 135
THAMES ST

445 A001

233010

1084465

446 A004

597

446 A002

445 A002

N

F10NE

38

64

1 inch = 50 feet

F10SE

April 1 2012 fy 2013

Tax Map Index; http://www.portlandassessors.com/taxmaps.htm

F11SW

Index Number - F11NW

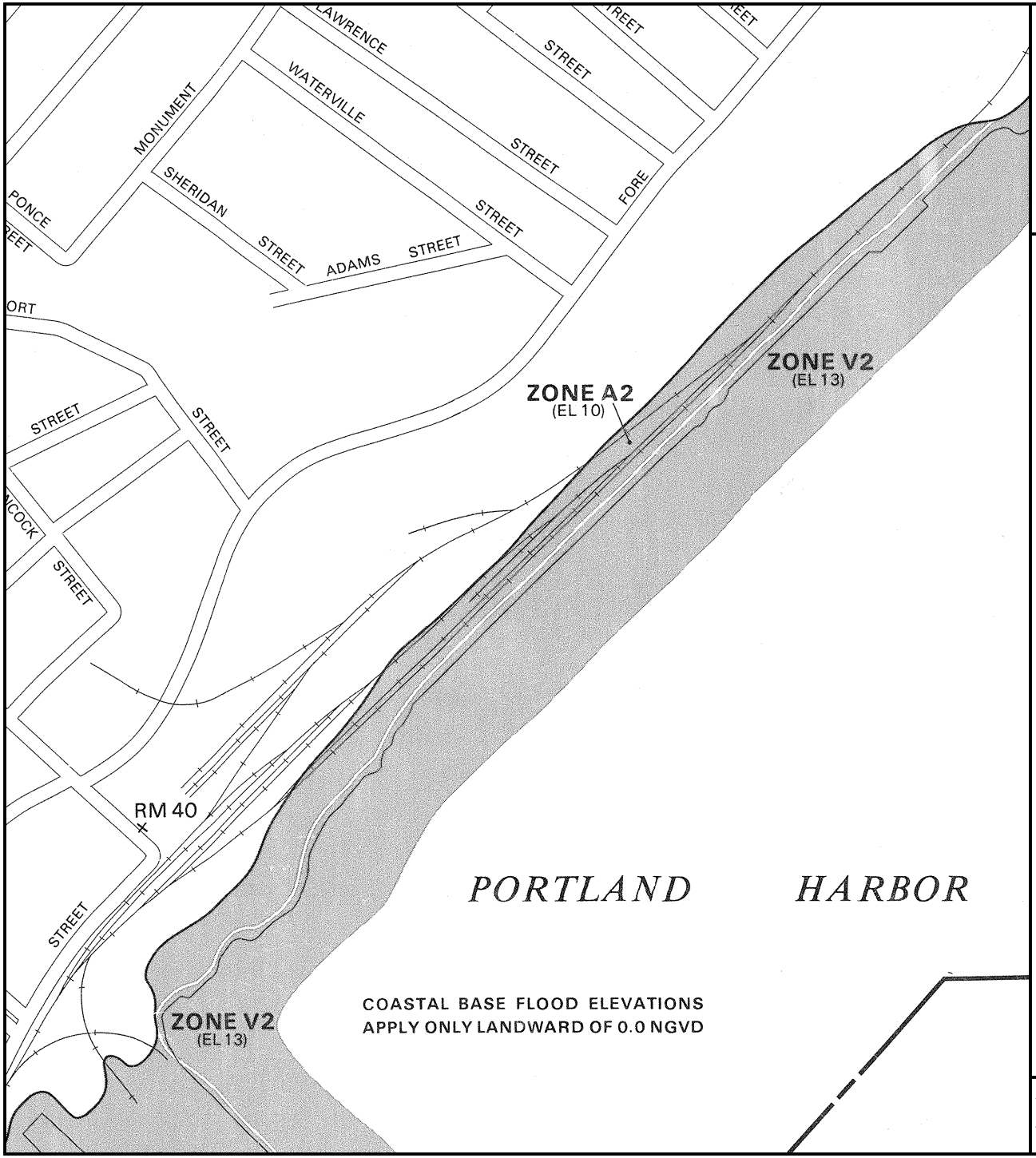

NATIONAL FLOOD INSURANCE PROGRAM

FIRM

FLOOD INSURANCE RATE MAP

CITY OF
PORTLAND, MAINE
CUMBERLAND COUNTY

PANEL 14 OF 17
(SEE MAP INDEX FOR PANELS NOT PRINTED)

COMMUNITY-PANEL NUMBER
230051 0014 B

EFFECTIVE DATE:
JULY 17, 1986

Federal Emergency Management Agency

This is an official copy of a portion of the above referenced flood map. It was extracted using F-MIT On-Line. This map does not reflect changes or amendments which may have been made subsequent to the date on the title block. For the latest product information about National Flood Insurance Program flood maps check the FEMA Flood Map Store at www.msc.fema.gov

CITY OF PORTLAND, MAINE
HISTORIC PRESERVATION BOARD

Julia Sheridan, Chair
Bruce Wood, Vice Chair
Ian Jacob
Robert O'Brien
Penny Pollard
Julia Tate
John Turk

May 17, 2019

Portland Foreside Development Company
Attn. Casey Prentice and Kevin Costello

Dear Casey and Kevin,

On February 6, 2019, the City of Portland's Historic Preservation Board voted 4-0 (Sheridan recused; O'Brien, Pollard absent) to:

1) amend the boundary of the Portland Company Historic District to reflect the revised relocation site for Building 12; and
2) approve your application for a Certificate of Appropriateness for the disassembly, reconstruction and relocation of Building 12 to the revised site

Approval was made on the basis of plans and specifications submitted on your behalf by your consultants for the 2/6/19public hearing. Approval was made subject to the following conditions of approval:

a) The documentation, disassembly and reconstruction of Building 12 will be performed according to the means and methods outlined in a letter dated 12/24/18 from Consigli Construction. Such documentation, disassembly and reconstruction will be performed in accordance with the Secretary of the Interior's Standards for the Treatment of Historic Properties.

b) Reconstruction of Building 12 shall be completed prior to the release of a Certificate of Occupancy for any other building on the property.

c) Any proposed alterations or additions to Building 12 must be reviewed and approved by the Historic Preservation Board prior to commencing with the reconstruction.

d) A remaining original window shall be salvaged for use as a template for reconstruction

e) Approval for relocation and reconstruction is contingent on the existing historic orientation of Building 12 being maintained as described in final proposal.

All work to be carried out as shown and described in the materials submitted for the 2/6/19

public hearing and/or as described above. Changes to the approved plans and specifications and any additional work that may be undertaken must be reviewed and approved by this office prior

to construction, alteration, or demolition. If, during the course of completing the approved work, conditions are encountered which prevent completing the approved work, or which require additional or alternative work, you must apply for and receive a Certificate of Appropriateness or Non-Applicability PRIOR to undertaking additional or alternative work.

This Certificate is granted upon condition that the work authorized herein is commenced within twelve (12) months after the date is issuance. If the work authorized by this Certificate is not commenced within twelve (12) months after the date of issuance or if such work is suspended in significant part for a period of one year after the time the work is commenced, such Certificate shall expire and be of no further effect; provided that, for cause, one or more extensions of time for periods not exceeding ninety (90) days each may be allowed in writing by the Department.

Sincerely,



Deborah Andrews
Historic Preservation Program Manager

Cc: Mary McCrann, Woodard & Curran

4. WAIVER REQUESTS

At this time, we are requesting only one waiver related to the light trespass standard. Maximum illumination levels will be exceeded at the property line at the site entrances to adjacent roadways and sidewalks, where pedestrians and/or vehicular traffic will be entering the property and additional lighting will be warranted; this is not anticipated to impact abutting properties.

4.1 Attachments

- City of Portland Waiver Table

Standard to be Waived: Cite Ordinance or Technical Manual Standard	Cite Standard Language: Cite specific language of applicable Ordinance or Technical Manual Standard	Waiver Being Sought: Describe waiver being sought. Ex. – We are requesting a two-way parking lot drive aisle width of 20' feet.	Justification for Waiver: Address specific waiver criteria, if applicable, and document reasons for the waiver request.
City of Portland Technical Manual - Section 12 Site Lighting, 12.3, 4. Light Trespass	Paraphrased: - Max illumination at property line shall not exceed 0.1 foot candles. - When a commercial use abuts a public ROW, lighting at the property boundary must not exceed 1.0 foot candles.	Requesting a waiver of the maximum illumination at the property line at entrances to the site as shown on the photometrics plan included with the site plan application.	Maximum illumination levels are exceeded at the primary entrances to the site; these are areas where pedestrians and/or vehicular traffic will be entering the property and additional lighting will be warranted.

5. EVIDENCE OF RIGHT, TITLE & INTEREST

The proposed development is located on properties owned by the Applicant and identified as Tax Map 18, Lots A001 and A002. Attached are copies of the deeds associated with these properties. Additionally, the Applicant has obtained easements for work that will occur on the adjacent Narrow Gauge Railroad property owned by the Maine Department of Transportation (Tax Map 18, Lot A013). Easements associated with this work are provided in Section 6.

5.1 Attachments

- Deeds

TRUSTEES' DEED

Maine Statutory Short Form

KNOW ALL BY THESE PRESENTS THAT **ELIZABETH M. SPRAGUE, ERIC THOMAS SPRAGUE and PHINEAS M. SPRAGUE, as Trustees of THE BUENA VISTA TRUST**, under indenture dated December 20, 2011, with a principal place of business in Cape Elizabeth, Maine, by the power conferred by law, and every other power, for consideration paid, grant to **CPB2 LLC**, a Delaware limited liability company, with a place of business c/o Blue Water Construction, 41 Glendale Place, Gilford, New Hampshire 03249, the land, together with any improvements thereon, situated in the City of Portland, County of Cumberland, State of Maine, described on Exhibit A attached hereto.

MAINE REAL ESTATE TAX PAID

Pursuant to Title 18-B M.R.S. § 1013, we, in our capacities, do hereby certify that (1) we are all of the Trustees of said Trust; (2) the Trust exists as the date of this Agreement; (3) we have power under said Trust to convey any trust asset in our sole discretion and need no consent from any beneficial interests; (4) we are the trustees authorized to execute or otherwise authenticate any and all documents in the exercise of our power; (5) in making this conveyance, we have in all respects acted in pursuance of the authority granted in and by said Trust; and (6) the Trust has not been revoked, modified, amended or terminated in any way that would cause the representations contained in this certificate to be incorrect.

[signatures on next page]

Witness our hands and seals this 19 day of the month of July, 2013.

WITNESS:

THE BUENA VISTA TRUST

_____

By_____
Eric Thomas Sprague, Trustee

_____

By_____
Elizabeth M. Sprague, Trustee

_____

By_____
Phineas M. Sprague, Trustee

STATE OF MAINE
COUNTY OF CUMBERLAND

July __, 2013

Then personally appeared the above named Eric Thomas Sprague, in his said capacity and acknowledged the foregoing instrument to be his free act and deed.

Before me,

_____
Notary Public/Attorney at Law

Witness our hands and seals this 26 day of the month of July, 2013.

WITNESS:

THE BUENA VISTA TRUST

By _____
Eric Thomas Sprague, Trustee

By _____
Elizabeth M. Sprague, Trustee

By _____
Phineas M. Sprague, Trustee

STATE OF MAINE
COUNTY OF CUMBERLAND

July 26, 2013

Then personally appeared the above named Eric Thomas Sprague, in his said capacity and acknowledged the foregoing instrument to be his free act and deed.

Before me,

~~Notary Public~~/Attorney at Law
Drew A. Ardelean

EXHIBIT A

A certain lot or parcel of land together with the buildings thereon situated on the southerly side of Fore Street in the City of Portland, County of Cumberland and State of Maine bounded and described as follows:

Beginning at a point on the southerly sideline of Fore Street at the northeasterly corner of Tract I as shown on "ALTA/ACSM Land Title Survey 58 Fore Street, Portland, Cumberland County, Maine made for CPB2 LLC" dated May 22, 2013 by Owen Haskell, Inc., thence N53°19'30"E along the southerly sideline of said Fore Street 140.00 feet;

Thence, N 61° 01' 30" E along the southerly sideline of said Fore Street 43.36 feet to land now or formerly of Macgowan as described in the Deed recorded in Cumberland County Registry of Deeds in Book 15773, Page 153;

Thence, S 31° 18' 30" E along land of said Macgowan 150.00 feet;

Thence, N 61° 01' 30" E along land of said Macgowan 112.00 feet to land now or formerly of Timothy Haley, Trustee, as described in the Deed recorded in the said Registry of Deeds in Book 24759, Pages 67 & 69;

Thence, S 31° 18' 30" E along land of said Haley 110.28 feet;

Thence, N 63° 18' 30" E along land of said Haley 100.00 feet;

Thence, N 31° 18' 30" W along land of said Haley 95.88 feet;

Thence, N 69° 31' 20" E along land of said Haley 49.73 feet to land now or formerly of Eastern Promenade Condominium;

Thence, S 31° 18' 26" E along land of said Eastern Promenade Condominium 240.48 feet to an iron rod found and to land now or formerly of the State of Maine as described in the Deed recorded in said Registry of Deeds in Book 10924, Page 91;

Thence, S 63° 18' 30" W along land of said State of Maine 430.00 feet to the easterly line of said Tract I;

Thence, N 33° 29 '33" W along said Tract I 381.17 feet to the point of beginning containing 2.87 acres.

The premises are conveyed together with the right of access and egress running from the existing paved driveway over land now or formerly of The Portland Company to the

premises conveyed herein as described in a deed to Elizabeth M. Sprague, Eric Thomas Sprague and Phineas M. Sprague, Trustees of The Buena Vista Trust by Warranty deed of The Portland Company dated December 30, 1012 and recorded in the Cumberland County Registry of Deeds in Book 30265, Page 32.

Meaning and intending to convey and hereby conveying the same premises conveyed to Elizabeth M. Sprague, Eric Thomas Sprague and Phineas M. Sprague, Trustees of The Buena Vista Trust by Warranty Deed of The Portland Company, dated December 30, 2012 and recorded in the Cumberland County Registry of Deeds in Book 30265, Page 32.

S:\P\POCO14\Prentice Purchase\Sale Documents\Deed of Trustees.doc

Received
Recorded Register of Deeds
Jul 29,2013 03:54:21P
Cumberland County
Pamela E. Lovley

Doc#: 13675 Bk:31425 Pg: 267

QUITCLAIM DEED WITH COVENANT

Maine Statutory Short Form

KNOW ALL BY THESE PRESENTS, that **THE PORTLAND COMPANY**, a Maine corporation and having a place of business at 58 Fore Street, County of Cumberland, and State of Maine, for consideration paid, grants to **CPB2 LLC**, a Delaware limited liability company, with an address of P.O. Box 7987, Portland, Maine 04112, with **QUITCLAIM COVENANTS,** the land located in Portland, County of Cumberland and State of Maine, and more particularly described in Exhibit "A" attached hereto and made a part hereof.

MAINE REAL ESTATE TAX PAID

IN WITNESS WHEREOF, said THE PORTLAND COMPANY has caused this instrument to be signed and sealed this 1st day of April, 2014.

WITNESS:

THE PORTLAND COMPANY

Phineas Sprague Jr

By: Phineas Sprague, Jr.
Its: President

STATE OF MAINE
COUNTY OF CUMBERLAND

April 1, 2014

Personally appeared the above-named Phineas Sprague, Jr. in his said capacity, and acknowledged the foregoing to be his free act and deed and that of said corporation, The Portland Company, before me.

~~Notary Public~~/Attorney at Law

Drew A. Anderson

Printed Name

EXHIBIT A

TRACT I

A certain lot or parcel of land together with the buildings thereon situated on the southerly side of Fore Street, City of Portland, County of Cumberland and State of Maine bounded and described as follows:

Beginning at a point on the southerly sideline of Fore Street at a railroad spike at the northeasterly corner of land now or formerly of Hope 1 LLC as described in deed Book 22261, Page 50, thence S 87° 34' 45" E along the southerly sideline of said Fore Street 287.74 feet;

Thence, N 53° 19' 30" E along the southerly sideline of said Fore Street 594.45 feet to the northwesterly corner of Tract III, as shown on "ALTA/ACSM Land Title Survey, 58 Fore Street, Portland, Cumberland County, Maine made for CPB2 LLC" by Owen Haskell, Inc. dated May 22, 2013.

Thence, S 33° 29' 33" E along the westerly side of said Tract III 381.17 feet to land now or formerly of the State of Maine as described in deed Book 10924, Page 91;

Thence, S 63° 18' 30" W along land of said State of Maine 255.00 feet;

Thence, S 68° 31' 30" W along land of said State of Maine 442.91 feet to an iron rod found (bent) and land now or formerly of City of Portland as described in deed Book 21951, Page 341;

Thence, N 88° 12' 30" W along land of said City of Portland 137.25 feet to a non-tangent curve to the right;

Thence, following the curve to the right, along land of said City of Portland and land of said Hope 1 LLC, having a radius of 274.33 feet, an arc length of 337.36 feet, a chord bearing of N 38° 35' 30" W, and a chord length of 316.50 feet, to the southerly sideline of Fore Street and the point of beginning containing 6.04 acres.

Basis of bearings: Magnetic 1967.

TRACT II

A certain lot or parcel of land together with the buildings thereon situated southerly of but not adjacent to Fore Street, in the City of Portland, County of Cumberland and State of Maine bounded and described as follows:

Commencing at a point on the southerly line of Tract I, at an iron rod found (bent) at the southeasterly corner of land now or formerly of the City of Portland as described in deed Book 21951, Page 341, on the northerly line of land now or formerly of the State of Maine as described in deed Book 10924, Page 91, as shown on "ALTA/ACSM Land Title Survey, 58 Fore Street, Portland, Cumberland County, Maine made for CPB2 LLC" by Owen Haskell, Inc. dated May 22, 2013.

Thence, N 68° 31' 30" E along the northerly line of land of said State of Maine 215.11 feet;

Thence, S 27° 09' 40" E across land of said State of Maine and along the easterly line of land now or formerly of the City of Portland 50.25 feet to the true point of beginning;

Thence, N 68° 31' 30" E along the southerly sideline of land of said State of Maine 225.10 feet;

Thence, N 63° 18' 30" E along the southerly sideline of land of said State of Maine 690.74 feet;

Thence, S 30° 39' 00" E along land of said State of Maine 56.34 feet;

Thence, S 61° 35' 30" W 27.46 feet;

Thence, S 77° 24' 52" W 94.07 feet;

Thence, S 62° 35' 30" W 475.00 feet;

Thence, S 38° 50' 30" W 60.00 feet;

Thence, S 63° 50' 30" W 120.00 feet;

Thence, N 26° 10' 00" W 8.00 feet;

Thence, S 63° 49' 37" W 150.00 feet to land of said City of Portland;

Thence, N 27° 09' 40" W along land of said City of Portland 74.89 feet to the point of beginning containing 44,274 sq. ft.

Basis of bearings: Magnetic 1967.

ALSO CONVEYING two crossings for vehicular, pedestrian and utility access to and from other land now or formerly of Phineas Sprague to the most immediately above described parcel across the area shown on Exhibit B of Indenture Deed by and between the Maine Department of Transportation and Phineas Sprague, dated August 30, 1993 and recorded in Book 10924, Page 97, as the "Rail-Trail Corridor." Each crossing shall be 50 feet in width over the 50 foot wide "Rail-Trail Corridor" plus turning radii, as necessary, at the entrances to the crossings from the above described parcel of land. Such crossings may be moved from time to time by the Grantee at its expense upon proper notice to and approval by the Maine Department of Transportation, provided that the distance between the centerlines of the two crossings shall never be less than 200 feet; and further provided that in the event of any relocation, any former crossing shall be restored to the condition it would have been in had the crossing not been placed in that location.

TOGETHER WITH any upland including the seawall which immediately adjoin the above described premises.

Received
Recorded Register of Deeds
Apr 03,2014 12:25:29P
Cumberland County
Pamela E. Lovley

QUITCLAIM DEED WITHOUT COVENANT

CITY OF PORTLAND, a body corporate and politic and Maine municipal corporation ("Grantor"), FOR CONSIDERATION PAID, releases to **CPB2 I LLC**, a Delaware limited liability company with a mailing address of Merrill's Wharf, 254 Commercial Street, Suite 118, Portland, Maine 04101 ("Grantee"), certain real property, together with any improvements thereon, located southerly of Fore Street, in the City of Portland, County of Cumberland and State of Maine (the "Premises"), more particularly described on Exhibit A attached hereto and made a part hereof.

MAINE REAL ESTATE TAX PAID

Grantee covenants and agrees by acceptance of this Deed that the Premises herein conveyed is subject to the Declaration of Covenants and Option to Repurchase the Premises set forth in Exhibit B attached hereto and hereby made a part hereof.

IN WITNESS WHEREOF, Grantor has caused this instrument to be executed on its behalf by Jon P. Jennings, its City Manager, duly authorized, on this 2 day of November, 2018.

WITNESS:

CITY OF PORTLAND

Jon P. Jennings
Its City Manager

STATE OF MAINE
COUNTY OF CUMBERLAND

November 2, 2018

Personally appeared the above-named Jon P. Jennings, City Manager of the City of Portland, as aforesaid, and acknowledged the foregoing to be his free act and deed in his said capacity, and the free act and deed of said City of Portland.

Before me,

Attorney-at-Law/~~Notary Public~~
Commission Expires:
Print Name: Michael Goldman Bar No. 9842

EXHIBIT A

A certain lot or parcel of land situated southerly of but not adjacent to Fore Street in the City of Portland, County of Cumberland and State of Maine bounded and described as follows:

Beginning at a point on the southerly line of land of CPB2 at the southeasterly corner of land now or formerly of 100 Fore Street LLC as described in deed book 33748, page 1;

Thence, southeasterly along the southerly line of land of said CPB2 along a curve to the left having a radius of 274.33 feet, an arc length of 86.71, chord bearing of S 80°30'39" E and chord length of 86.35;

Thence, N 76°02'49" E along the southerly line of said CPB2 a distance of 137.25 feet to land of the State of Maine;

Thence, S 57°47'32" W across land of said City of Portland 11.22 feet to a point of curvature;

Thence, southwesterly across land of said City of Portland along a curve to the left, having a radius of 466.50 feet an arc length of 133.12 feet chord bearing of S 49°37'02" W and chord length of 132.67 feet;

Thence, S 41°26'32" W across land of the City of Portland 17.92 feet;

Thence, S 46°01'18" W along land of the State of Maine 31.95 feet;

Thence, N 52°05'24" W across land of the City of Portland 97.53 feet to a point of curvature;

Thence, northwesterly across land of the City of Portland along a curve to the right having a radius of 370.00 feet, an arc length of 47.73 feet, chord bearing of N 48°23'40" W and chord length of 47.70 feet to the southerly line of land of said 100 Fore Street LLC;

Thence, N 66°39'40" E along the southerly line of land of said 100 Fore Street LLC 43.19 feet to land of said CPB2 and the point of beginning containing 12,087 square feet more or less and being a portion of the property described in deed book 10924, page 84.

The above described parcel of land is shown on "Exhibit Plan Proposed Parcel City to CPB2 Fore Street Portland, Maine" dated July 2018 by Owen Haskell, Inc.

Bearings are based on Maine State Plane Coordinate System.

EXHIBIT B

Declaration of Covenants, Restrictions, And Option to Repurchase

1. This Declaration of Covenants, Restrictions, and Option to Repurchase (the "Declaration") was contemplated by the terms and conditions of a certain Purchase and Sale Agreement dated December 5, 2016 between Grantor and Grantee, as amended to date, a copy of which is on file with the City of Portland's Department of Finance and incorporated by reference herein (the "Agreement").

2. Access Road.

a. Grantee covenants and agrees to commence construction of a certain Access Road to CPB2's Property, as those terms are defined in the Agreement, within 36 months after the date of the deed to which these Covenants are attached (the "Closing Date"). After the construction of the Access Road has commenced, Grantor shall execute and record an affidavit indicating that the Option (as defined in Section 5 below), including Grantor's right and option to repurchase the Premises, has terminated and is on no further force or effect.

b. In the event that Grantor does not construct the Thames Street Extension (as defined in the Agreement) prior to Grantee's commencement of construction on CPB2's Property, and provided that Grantee, and/or its successors and assigns, is unable to access CPB2's Property from Fore Street, Grantor shall enter into a revocable license agreement with Grantee, and/or its successors or assigns, in a form satisfactory to Grantor, in order to provide the owner of the Premises and the owner of CPB2's Property, and their respective contractors, tenants, and invitees, with access to the Premises and/or to CPB2's Property across other property owned by Grantor that is contiguous to the western boundary of the Premises. Such license agreement shall only be available to Grantee and/or its successors and assigns from the time Grantee loses access to its property from Fore Street until the City completes the construction of the Thames Street Extension.

3. Payment In Lieu Of Property Taxes. Grantee covenants and agrees in the event that the Premises or any portion thereof shall be exempt from real and personal property taxes, by transfer, conversion, or otherwise, then the then-owner of the exempt portion shall make annual payments to the Grantor in lieu of taxes in the amount equal to the amount of property taxes that would have been assessed on the exempt portion of the real and personal property situated on the Premises had such property remained taxable. Grantor hereby confirms that Grantee and its successors and assigns shall possess and be vested with all rights and privileges as to abatement and appeal of valuations, rates, and the like as are accorded owners of real and personal property in Maine.

4. Grantee covenants and agrees to indemnify, defend, and hold Grantor harmless from and against any and all claims, damages, losses, liabilities, obligations, settlement payments, penalties, assessments, citations, directives, claims, litigation, demands, defenses, judgments, costs, or expenses of any kind, including, without limitation, reasonable attorneys', consultants', and experts' fees incurred in investigating, defending, settling, or prosecuting any claim, litigation or proceeding, that may at any time be imposed upon, incurred by or asserted or awarded against Grantee or Grantor and relating directly or indirectly to the violation of or compliance with any federal, state, or local environmental laws, rules, or regulations governing the release, handling or storage of hazardous wastes or hazardous materials and affecting all or any portion of the Premises, except to the extent that such a claim results directly from the Grantor's release, handling or storage of hazardous wastes or hazardous materials on the Premises.

5. Grantor's Option to Repurchase. Subject at all times to the remaining terms and conditions in this Section 5, if Grantee fails to commence construction of the Access Road as described in Section 2 above within 36 months after the Closing Date, Grantor shall have the right, during the one (1) year period from the third (3rd) anniversary of the Closing Date to, and including, the day immediately preceding the fourth (4th) anniversary of the Closing Date (the "Option Period"), but not the obligation, to repurchase the Premises at the Purchase Price set forth in the Agreement (such right set forth above and described below is hereinafter referred to as the "Option").

a. In order to exercise this Option to repurchase, Grantor must notify Grantee in writing (the "Notice") of its intent to do so during the Option Period. If Grantor gives Grantee the Notice during the Option Period, then Grantee shall have the right, but not the obligation, to commence construction of the Access Road within sixty (60) days after Grantee's receipt of the Notice. If Grantee commences construction of the Access Road within sixty (60) days after its receipt of the Notice, then, upon return to Grantor of the Earnest Money described below, the Notice shall be deemed automatically rescinded, and the provisions of this Section 5 shall be deemed of no further force or effect, as of the date of such commencement of construction. If Grantee fails to commence construction of the Access Road within sixty (60) days after its receipt of the Notice, then Grantee agrees that it will reconvey to Grantor the Premises within ten (10) business days after the expiration of said sixty (60) day period for the Purchase Price paid by Grantee to Grantor. The time, place and exact date of the closing shall be agreed to by the parties.

b. In the event Grantor provides the Notice of its intent to exercise the option, the Notice is to be accompanied by a payment to Grantee or its successors or assigns of earnest money in the amount of One Thousand Dollars ($1,000.00) (the "Earnest Money").

c. If Grantor exercises this Option to purchase the Premises, then in consideration of the terms, covenants and conditions contained herein, the parties mutually agree as follows:

i. Upon the giving of the Notice together with the Earnest Money, Grantee shall thereby be bound to sell and City shall thereby be bound to purchase the Premises upon the terms and conditions set forth herein, except as otherwise provided in clause 5.a above. Grantee or its successors, transferees or assigns shall execute, acknowledge and deliver to Grantor a quitclaim deed conveying to Grantor good and marketable title to the Premises, free and clear of all encumbrances and defects in title, except for utility and public easements of record servicing the Premises, and except for those approved by Grantor in its sole discretion. The closing shall be held at the date, time and place agreed to by the parties, or at such reasonable date thereafter as may be required to clear any encumbrance and defects in title, and Grantee or its successors, transferees or assigns shall then and there deliver the deed to Grantor upon tender of the balance of the Purchase Price by wire transfer, certified check, cashier's check, or cash. The balance to be tendered to Grantee or its successors or assigns shall be the Purchase Price, less the Earnest Money and any other option consideration actually received by Grantee.

ii. If counsel for Grantor, or its successors or assigns, shall be of the opinion, given in good faith, that the title to said Premises is defective or is otherwise not free and clear of all material encumbrances or that the title is not marketable, then Grantor, its successors or assigns, shall have the right, provided it or they shall have exercised this Option, to extend the time for conveyance of the Premises, during which time Grantee or its successors, transferees or assigns shall make a reasonable effort to remove such defects at its own expense, to the satisfaction of counsel of Grantor, its successors or assigns. If record title proves defective and Grantee or its successors or assigns shall fail to remove such defect within a reasonable time after notice from Grantor of the nature of the defect, Grantor may, at its election, (a) cure any such defect and deduct the cost thereof from the Purchase Price at closing, or (b) elect to close notwithstanding any such defect, or (c) terminate this Option by written notice to Grantee or its successors or assigns, whereupon all Earnest Money paid by Grantor to Grantee or its successors or assigns shall immediately be returned to Grantor and thereafter the parties shall be relieved of all obligations and this Option shall terminate.

iii. If all obligations of this agreement have been performed, excepting that Grantor does not complete the purchase, Grantee or its successors or assigns shall retain the Earnest Money as full liquidated damages, and without recourse to any other remedies, and whereupon this Option shall terminate and shall be of no further force or effect.

iv. Full possession of the Premises, free of all encumbrances except as aforesaid, is to be delivered to Grantor at closing, with the Premises to be in the reasonably functional condition, reasonable wear and tear excepted.

v. Real estate taxes and utilities shall be prorated as of the time of the passing of title. Real estate transfer taxes, if any, arising in connection with the conveyance of the Premises shall be paid by Grantor and/or Grantee or its successors or assigns in accordance with the custom of the locality where the Premises are situated.

d. Notwithstanding anything else to the contrary herein, in the event that (a) Grantor fails to give the Notice on or before the expiration of the Option Period, (b) Grantee commences construction of the Access Road on or before the third (3rd) anniversary of the Closing Date, or (3) Grantee commences construction of the Access Road within sixty (60) days after Grantee's receipt of the Notice and returns the Earnest Money to Grantor in accordance with Section 5(a) above, the Option, including Grantor's right and option to repurchase the Premises, shall terminate and shall be of no further force or effect, and upon such termination, Grantor shall execute and record an affidavit indicating that the Option, including Grantor's right and option to repurchase the Premises, has terminated and is of no further force or effect.

e. The parties hereto hereby agree that this right and option to purchase, and the Grantor's rights in the Premises thereby created, are immediately fully vested and are hereby deemed to be fully vested in any event, not contingent, and shall, by agreement, not be subject to the Rule Against Perpetuities, or any statutory enactment thereof, or similar law.

f. This Option is personal to Grantor (City of Portland) and cannot be assigned to or exercised by any other person or entity.

6. This Declaration may be amended or modified in whole or in part only by written agreement of Grantee and Grantor.

7. The covenants and option to repurchase set forth herein are intended to, and shall, run with the Premises and shall bind all subsequent owners of the Premises.

8. Except as specifically set forth herein, this Declaration shall survive a sale, transfer, foreclosure or transfer of title in lieu of foreclosure, or other disposition of the Premises.

9. This Declaration is enforceable by Grantor as a contract and shall inure to the benefit of and be enforceable by Grantor, its successors, and assigns.

10. The validity of any clause, part or provision of this Declaration shall not affect the validity of the remaining portions of thereof.

Received
Recorded Register of Deeds
Nov 05,2018 09:28:05A
Cumberland County
Nancy A. Lane

Doc#: 14813 Bk:35576 Pg: 153

MAINE REAL ESTATE TAX PAID

SHORT FORM QUITCLAIM DEED WITH COVENANT

DLN No. 1001940054598

100 FORE STREET, LLC, a Maine limited liability company with a mailing address of P.O. Box 910, Westbrook, Maine 04098-0910 ("Grantor") FOR CONSIDERATION PAID, grants to **CPB2 I LLC** ("Buyer"), a Delaware limited liability company, having an address at Merrill's Wharf, 254 Commercial Street, Suite 118, Portland, Maine 04101 ("Grantee") with QUITCLAIM COVENANT, certain real property, with any improvements thereon, located at or near 100 Fore Street, Portland, Cumberland County, Maine, and more particularly described on **Exhibit A** attached hereto and made a part hereof.

Being a portion of the premises described in Quitclaim Deed with Covenant granted by Hope 1, LLC to the Grantor dated January 6, 2017 and recorded in the Cumberland County Registry of Deeds in Book 33748, Page 1.

IN WITNESS WHEREOF, 100 Fore Street, LLC has caused this instrument to be executed and delivered by Jonathan S. Cohen, its duly-authorized Manager as of this 10th day of April, 2019.

WITNESS:

100 FORE STREET, LLC

By: MANAGER
Jonathan S. Cohen Manager

State of Maine
County of Cumberland

April 10, 2019

PERSONALLY APPEARED before me the above-named Jonathan S. Cohen, Manager of 100 Fore Street, LLC, and acknowledged the foregoing instrument to be his free act and deed in his said capacity and the free act and deed of said limited liability company.

Before me,

Name: Hawley Strait
~~Notary Public~~/Attorney at Law
~~Commission Expires~~

EXHIBIT A

A certain lot or parcel of land situated southerly of but not adjacent to Fore Street in the City of Portland, County of Cumberland and State of Maine bounded and described as follows:

Beginning at a point on the southerly line of land of CPB2 LLC at the southeasterly corner of land now or formerly of 100 Fore Street, LLC as described in deed book 33748, page 1;

Thence, S 66°39'40" W along the southerly line of land of said 100 Fore Street LLC 43.19 feet;

Thence, the following courses and distances through the land of the grantor:

Northwesterly along a curve to the right having a radius of 370.00 feet, an arc length of 13.77 feet, chord bearing of N 43°37'59" W and chord length of 13.77 feet;

N 42°34'01" W 68.76 feet;

Northwesterly along a curve to the right having a radius of 370.24 feet, an arc length of 134.07 feet, chord bearing of N 32°11'34" W and chord length of 133.34 feet the easterly line of land of said CPB2, LLC;

Thence, southeasterly along a curve to the left having a radius of 274.33, an arc length of 235.73 feet, chord bearing of S 46°50'20" E and chord length of 228.54 feet to the point of beginning, containing 2,247 square feet, more or less and being a portion of the property described in deed book 33748, page 1.

The above described parcel of land is shown on "Exhibit Plan Proposed Parcel to be Conveyed Fore Street Portland, Maine" dated February 2018 by Owen Haskell, Inc.

Bearings are based on Maine State Plane Coordinate System.

Received
Recorded Register of Deeds
Apr 12,2019 01:15:52P
Cumberland County
Nancy A. Lane

6. EASEMENTS AND OTHER BURDENS

There are a number of easements and other burdens on the project Site associated with Maine DOT (Narrow Gauge Railroad), various utilities, and the City of Portland; attached are copies of the easements.

6.1 Attachments

- Easements

EXCHANGE AGREEMENT

THIS EXCHANGE AGREEMENT (this "Agreement") made this 21st day of June, 2017 by and between the CITY OF PORTLAND, a body politic and corporate located in Cumberland County, Maine (hereinafter referred to as "CITY"), CPB2 LLC, a Delaware limited liability company, having a mailing address of c/o CPB2 Management LLC, P.O. Box 7987, Portland, Maine 04112 (hereinafter referred to as "CPB2"), and STATE OF MAINE DEPARTMENT OF TRANSPORTATION, an agency of the State of Maine, having a mailing address of 16 State House Station, Augusta, Maine 04333-0016 (hereinafter referred to as "DOT"). For the purposes of this Agreement, the CITY, CPB2 and DOT are sometimes hereinafter collectively referred to as the "Parties" and individually as a "Party."

RECITALS

WHEREAS, CITY is the owner of that certain real property located along the eastern waterfront that is designated on the official tax map for the City of Portland as Block 448, Lot A-1 (the "CITY Property"); and

WHEREAS, CPB2 is the owner of that certain real property known as 58 Fore Street in the City of Portland, County of Cumberland and State of Maine, which is more particularly described in deeds dated July 19, 2013 and April 1, 2014 and recorded in the Cumberland County Registry of Deeds in Book 30879, Page 75 and Book 31425, Page 267 respectively (the "CPB2 Property"); and

WHEREAS, DOT is the owner of that certain right of way along the eastern waterfront that is designated on the official tax map for the City of Portland as Block 18, Lot A-13 (the "DOT Right of Way"); and

WHEREAS, in connection with the construction of the Thames Street extension and the development of the CPB2 Property, CITY and CPB2 have proposed the relocation of a portion of the DOT Right of Way in the manner shown on the Land Transfer Plan prepared by Woodard & Curran dated December 1, 2016 and revised January 10, 2017, a copy of which is attached hereto as Exhibit A (the "Plan"); and

WHEREAS, DOT has approved the relocation of the DOT Right of Way, as shown on the Plan; and

WHEREAS, in order to accomplish such relocation, the parties have agreed to certain property transfers, as identified herein; and

WHEREAS, the parties hereto desire to memorialize their agreements;

NOW THEREFORE, in consideration of the foregoing and for other good and valuable consideration, the receipt and sufficiency of which is hereby acknowledged, the parties, intending to be legally bound, hereby agree as follows:

1. **EXCHANGE.** In accordance with the terms and conditions set forth in this Agreement, (i) CITY agrees to transfer to DOT the property designated on the Plan as "City to MDOT" (the "CITY/DOT Exchange Property") by municipal quitclaim deed, (ii) DOT agrees to transfer to CITY the property designated on the Plan as "DOT to City" (the "DOT/CITY Exchange Property") by deed of vacation, (iii) DOT agrees to transfer to CPB2 the property designated on the Plan as "DOT to CPB2" (the "DOT/CPB2 Exchange Property") by deed, of vacation (iv) CPB2 agrees to transfer to DOT the property designated on the Plan as "CPB2 to DOT" (the "CBP2/DOT Exchange Property") by quitclaim deed, and (v) CPB2 agrees to transfer to CITY the property designated on the Plan as "CPB2 to City" (the "CPB2/CITY Exchange Property") by quitclaim deed, together with an easement in a form satisfactory to the CITY and CPB2 allowing public access over the entire five foot strip of land separating the CPB2/CITY Exchange Property from the water(said properties being hereinafter collectively referred to as the "Exchange Properties" and individually referred to as an "Exchange Property").

2. **CONSIDERATION**. The parties agree that the properties being conveyed are of a comparable size and value and that there is no additional consideration being paid or received by any party in connection with the exchanges.

3. **SURVEY.** CPB2 shall, at is sole expense, cause an ALTA survey to be prepared that will more specifically describe, by metes and bounds, the Exchange Properties. CPB2 shall provide such survey and associated property descriptions to the CITY and to DOT on or before the expiration of the Due Diligence Period (as defined in Paragraph 4.a) for their review and approval.

4. **TITLE.**

   a. Due Diligence Period. Each Party will have from the date of this Agreement until 4:00 PM Eastern Daylight Savings Time on the day that is one hundred eighty (180) days after the date of this Agreement (the "Due Diligence Period") to complete its title and survey examinations.

   b. Title and Survey Objections. Each Party will have thirty (30) days from the expiration of the Due Diligence Period (the "Due Diligence Response Period") to deliver to the other Parties any written objections to title or survey matters (other than the permitted exceptions identified herein), including, but not limited to, those affecting marketability or use. Objections not made prior to the end of the Due Diligence Response Period will be deemed waived; provided, however, that objections pertaining to matters of record first appearing after the date of this Agreement may be made at any time prior to the closing.

   c. Option to Cure. In the event of (i) an objection to the title or the survey pursuant to Paragraph 4.b or (ii) an objection to the results of the Inspection (as defined in Paragraph 5.a) pursuant to Paragraph 5.f, the Party who owns the property to which such objection relates (the "Notice Recipient") will have the option, but not the obligation, to cure the objection and will notify the

Party who gave the objection notice (the "Notice Sender") of its election within ten (10) business days after receipt of the objection. In the event that the Notice Recipient elects to cure the objection, it will have sixty (60) days from the date of the notice of election, or such other reasonable time as the Parties may agree, to cure the objection to the satisfaction of the Notice Sender. In the event that the Notice Recipient does not elect to cure the objection, or, having elected to cure the objection fails to timely do so to the satisfaction of the Notice Sender, then the Notice Sender will have the option to (1) terminate this Agreement (after which the Parties will not have any further obligation or liability to the other Parties under this Agreement), (2) waive the objection and close, or (3) undertake the cure of such objection at its own expense (in which case it shall have 60 days to do so). In the event the Notice Sender elects to cure such objection, but the Notice Sender is unable to cure such objection to its reasonable satisfaction within said 60-day period, then the Notice Sender will have the option to (1) terminate this Agreement (after which the Parties will not have any further obligation or liability to the other under this Agreement), or (2) waive the objection and close.

d. CPB2 shall convey its property at the closing in fee simple by a quitclaim deed. The City shall convey its property at the closing in fee simple by municipal quitclaim deed. Title shall be free and clear of all encumbrances, except (i) easements for utilities servicing the property, (ii) zoning ordinances, and (iii) real estate taxes not yet due and payable.

e. DOT shall convey its property at the closing as a full release of whatever property interest(s) DOT holds by a deed of vacation. Title shall be free and clear of all encumbrances, except (i) easements for utilities servicing the property, and (ii) zoning ordinances.

5. <u>INSPECTIONS</u>.

a. During the Due Diligence Period and the Due Diligence Response Period, each Party and their respective employees, consultants, contractors and agents shall have the right, at such Party's expense (except as otherwise set forth herein), to enter on the Exchange Property being conveyed to them, at reasonable times, in order to (i) inspect the same, (ii) conduct engineering studies, percolation tests, geotechnical exams, environmental assessments, and other such studies, tests, exams, and assessments, and (iii) do such other things as such Party determines, in its sole discretion, to be required to determine the suitability of such Exchange Property for such Party's intended use (collectively, the "Inspections"). The Parties acknowledge that such Inspections may include the digging of test pits, which each Party hereby approves.

b. To the extent permitted by law, the Party performing the Inspections agrees to defend, indemnify and hold harmless the Party on whose property the Inspections are being performed against any mechanics' liens that may

arise from the activities of said Party and its employees, consultants, contractors and agents on the property.

c. Each Party shall exercise the access and inspection rights granted hereunder at its sole risk and expense, and the Party performing the Inspections hereby releases the Party on whose property the Inspections are being performed from, and agrees to indemnify, defend, and hold said Party harmless, to the extent permitted by law, against, any and all losses, costs, claims, expenses and liabilities (including without limitation reasonable attorney fees and costs) (collectively, "Damages") suffered by said Party on account of any injury to person or damage to property arising out of the exercise by the other Party of its rights hereunder, except to the extent that such Damages result from the act or omission of the Party on whose property the Inspections are being performed. Nothing in this Agreement shall waive any defense, immunity or limitation of liability that may be available to CITY and/or DOT under the Maine Tort Claims Act (14 M.R.S. § 8101 et seq.) or any other privileges or immunities provided by law. Any other provision of this Agreement to the contrary notwithstanding, this provision shall survive any termination or expiration of this Agreement.

d. The Party (other than DOT and the CITY) performing the Inspections shall cause any contractors, consultants or any other party conducting the Inspections to procure automobile insurance and general commercial or public liability insurance coverage in amounts of not less than Four Hundred Thousand Dollars ($400,000.00) per occurrence for bodily injury, death and property damage and also Workers' Compensation Insurance coverage to the extent required by law. DOT and the City are self-insured.

e. In the event that the Party performing the Inspections does not acquire the property in question for any reason or for no reason, said Party agrees to either return the property in question as nearly as possible to its original condition after conducting the Inspections, or, at the option of the Party who owns the property in question, reimburse the Party owning the property for any physical damage caused to the property in question in connection with the Inspections; provided, however, the Parties hereby acknowledge and agree that the term "physical damage" does not include any disturbance of any pre-existing environmental contamination on the property caused by such inspections, studies, tests, exams, and assessments, and that the Party performing such Inspections shall have no obligation to clean-up, remove or take any other action with respect to any pre-existing environmental contamination disturbed thereby.

f. The parties hereto acknowledge and agree that it is a condition to each Party's obligations under this Agreement that the results of the Inspections be acceptable to the Party performing such Inspections in its sole discretion. If the results of such due diligence are not acceptable to the Party performing such Inspections in its sole discretion, then such Party

shall notify the Party who owns the property to which such results relate, and the provisions of Paragraph 4.c shall apply. If such Party ultimately exercises its right to terminate this Agreement, then the Parties shall not have any further obligations or liabilities under this Agreement to each other except as expressly set forth in this Agreement.

6. **TAXES, PRORATIONS AND RECORDING FEES.**

   a. CPB2 shall be liable for all real estate taxes attributable to the CPB2/DOT Exchange Property and the CPB2/CITY Exchange Property through the end of the fiscal year in which the closing occurs. CPB2 shall be liable for all real estate taxes attributable to the DOT/CPB2 Exchange Property beginning as of the start of the fiscal year following the closing and continuing thereafter. Because the DOT/CPB2 Exchange Property, the DOT/CITY Exchange Property, and the CITY/DOT Exchange Property are currently owned by entities that are exempt from real estate taxes, no taxes have been assessed or will be due for any portion of the current fiscal year, and no taxes will be prorated for those properties at the closing.

   b. The DOT/CPB2 Exchange Property and the CPB2/CITY Exchange Property are the only Exchange Properties subject to Maine real estate transfer tax at closing, and any transfer tax due shall be paid for by CPB2 in accordance with 36 M.R.S. § 4641-A. CITY and DOT are exempt from paying the transfer tax pursuant to 36 M.R.S. § 4641-C, and the transfer of the CPB2/DOT Exchange Property is exempt because it is a conveyance to DOT for transportation purposes..

   c. The recording fees for the various deeds shall be paid for by CPB2.

7. **DEFAULT AND REMEDIES**. In the event that any Party defaults under this Agreement, any of the non-defaulting Parties shall have the right (i) to the extent permitted by law, to pursue specific performance or (ii) in lieu of specific performance, as its sole remedy to terminate this Agreement (after which the Parties will not have any further obligation or liability to the other under this Agreement).

8. **RISK OF LOSS.** The risk of loss or damage to any of the Exchange Properties by fire, eminent domain, condemnation, or otherwise, until transfer of title hereunder, is assumed by the owner of the Exchange Property in question. The Exchange Properties are to be delivered in substantially the same condition as of the date of this Agreement unless otherwise stated. In the event any Party is not able to deliver their Exchange Property as stated, any of the other Parties may terminate this Agreement, and the Parties shall not have any further obligations or liabilities under this Agreement except as expressly set forth in this Agreement.

9. **PROPERTY SOLD "AS IS, WHERE IS**." Except as otherwise set forth in this Agreement, each Party acknowledges (i) that, by the end of the Due Diligence Response Period, it will have had an opportunity to inspect the Exchange Property it is receiving, or to hire professionals to do so; (ii) that such Exchange Property will be

sold "as is, where is" and "with all faults;" and (iii) that the current owner of such Exchange Property, and its agents, shall not be deemed to have made any representations or warranties with respect to such Exchange Property, including, without limitation, the accuracy of any statement relating to boundaries or acreage, or relating to any other matters contained in any description of such Exchange Property, or relating to the fitness of such Exchange Property for a particular purpose, or relating to development rights, merchantability, habitability, or as to any other matter, including without limitation, land use, zoning and subdivision issues or the environmental, mechanical, or structural condition of such Exchange Property. Acceptance by a Party of the deed at closing to the Exchange Property it is receiving shall be deemed to be full performance and discharge by the Party conveying such Exchange Property of every agreement and obligation contained herein.

10. **CLOSING**. Time is of the essence in the performance of this Agreement. The closing shall be held at the offices of CPB2's counsel at a time agreeable to the Parties on or before the earlier of that date that is 30 days after the date that the CITY receives the last of the Thames Street Extension Approvals, as that term is defined below, or January 31, 2018, so long as the Due Diligence Response Period has expired. Provided, however, that if the CITY has not received the last of the Thames Street Extension Approvals by January 1, 2018, the closing date, may, upon the mutual agreement of the Parties, be extended to a later date agreed to by the Parties. At the closing:

    a. each Party shall execute, acknowledge and deliver the deed required under this Agreement to convey title to the Exchange Property in question, free and clear of all encumbrances other than those approved by the recipient of such Exchange Property in its sole discretion;

    b. each Party shall execute, acknowledge and deliver such affidavits and indemnifications, to the extent permitted by law, in form and substance reasonably satisfactory to the applicable Parties, regarding mechanics' liens, materialmen's' liens and parties in possession sufficient to eliminate any title insurance exceptions for these matters;

    c. each Party shall deliver to the others such other documents, certificates and the like as may be required herein or as may be necessary to carry out the obligations under this Agreement; and

    d. DOT will grant to CPB2 an easement in accordance with the provisions of Paragraph 1(b) of an associated MOU, as such MOU is defined in Paragraph 11 below.

    For the purposes of this Agreement, the term "Thames Street Extension Approvals" shall mean CITY'S receipt of all necessary permits and regulatory approvals to construct the Thames Street extension and related utilities and the appropriation by the Portland City Council of the funds necessary to do so.

11. CONTINGENCIES. DOT and CPB2 entered into a certain Memorandum of Understanding dated March 31, 2015 relating to the portion DOT Right of Way that bisects the CPB2 Property, which memorandum contemplated the exchange of property between the parties thereto (the "MOU"). DOT and CPB2 acknowledge and agree that DOT's obligations under this Agreement are contingent upon (i) the submission to DOT of the geological tests of the soils required by Paragraph 3 of the MOU and, if applicable, the performance of the work described in Paragraph 3.b of the MOU, (ii) the consent of the CITY to the relocation of the Trail Corridor (as defined in the MOU), as contemplated by Paragraph 7 of the MOU, and (iii) if applicable, CPB2 obtaining the consent of the Trust for the Preservation of Maine Industrial History and Technology (the "Narrow Gauge") to the relocation of the narrow gauge railroad track or to the terms of a lease agreement between the Narrow Gauge and CPB2 to replace the terms of the Narrow Gauge's existing lease with DOT, as contemplated by Paragraphs 4 and 7 of the MOU.

12. ENVIRONMENTAL ASSESSMENT.

As outlined in the MOU, if it is determined by CPB2 that a Phase I Environmental Site Assessment of the existing Rail Corridor, as such is defined in the MOU, is required in connection with the exchange contemplated herein, CPB2 agrees to obtain, at its sole cost and expense, such Phase I Assessment and to submit the resulting report to DOT for review.

a. If, as a result of the findings of the Phase I Assessment, it is determined that a Phase II Environmental Site Assessment is required, CPB2 agrees to obtain, at its sole cost and expense, such Phase II Assessment and to submit the resulting report and all data and associated documentation to DOT for review.

b. If it is determined that environmental remediation is required in connection with the existing Rail Corridor, the Parties acknowledge that DOT shall not be required to perform such remediation unless CPB2 agrees to pay for all associated costs or DOT is otherwise reimbursed for such costs.

13. RELATED WORK.

a. If CPB2 elects to relocate the narrow gauge railroad track, as contemplated by Paragraph 4.a of the MOU, and if the Narrow Gauge has consented to such relocation, then CPB2 agrees to relocate the same at no expense to DOT or to the Narrow Gauge. DOT acknowledges that such work will be done in connection with the redevelopment of the portion of the DOT/CPB2 Exchange Property on which the narrow gauge railroad tracks currently exist and will likely occur after the closing.

b. CPB2 agrees further to relocate the Trail Corridor (as defined in the MOU) at no expense to DOT or to CITY. DOT and CITY acknowledge that such work will be done in connection with the redevelopment of the marina or the redevelopment of the portion of the CPB2 Property that runs along the shoreline, and will likely occur after the closing. If the new location of the Trail Corridor, as shown on an

approved site plan, is partly on the CPB2 Property, then CPB2 agrees to grant to CITY an easement over such portion on substantially the same terms and conditions as set forth in the easement granted by DOT to CITY.

c. In connection with the relocation of the narrow gauge railroad tracks and/or the relocation of the Trail Corridor, DOT agrees to grant to CPB2 a temporary, construction right over the relocated DOT Right of Way to the extent reasonably required to relocate the narrow gauge railroad tracks and/or the Trail Corridor. If requested by CPB2, CITY also agrees to grant to CPB2 a temporary, construction right in form and substance reasonably satisfactory to the CITY, over the relocated Trail Corridor to the extent reasonably required to relocate the narrow gauge railroad tracks and/or the Trail Corridor.

d. DOT acknowledges that the relocation of the narrow gauge railroad tracks and/or the Trail Corridor may require site plan approval or other governmental approval, and DOT agrees to reasonably cooperate with CPB2 in connection with such approvals and to execute and deliver any documents reasonably requested by CPB2 or any governmental entity, department or agency in connection therewith, provided such documents are in form and substance reasonably satisfactory to DOT and do not require DOT to undertake any construction work in connection with such relocation or relocations.

e. The provisions of this Paragraph 13 shall survive the closing.

14. ENTIRE AGREEMENT. This Agreement represents the entire and complete Agreement and understanding between the Parties and supersedes any prior agreement or understanding, written or oral, between the Parties with respect to the acquisition or exchange of the Exchange Properties hereunder. This Agreement cannot be amended except by written instrument executed by the CITY, CPB2 and DOT.

15. NON-WAIVER. No waiver of any breach of any one or more of the conditions of this Agreement by a Party shall be deemed to imply or constitute a waiver of any succeeding or other breach hereunder.

16. HEADINGS AND CAPTIONS. The headings and captions appearing herein are for the convenience of reference only and shall not in any way affect the substantive provisions hereof.

17. BINDING EFFECT. This Agreement shall be binding upon and inure to the benefit of the Parties and their respective heirs, administrators, successors and assigns.

18. TIME IS OF THE ESSENCE. The CITY, CPB2 and DOT each confirm and agree that each of the time periods set forth herein are essential provisions of the terms of this Agreement.

19. GOVERNING LAW. This Agreement shall be construed in all respects in accordance with, and governed by, the laws of the State of Maine. The Parties hereto hereby consent to the exclusive jurisdiction of the Superior Court for the County of

Cumberland in the State of Maine, for all actions, proceedings and litigation arising from or relating directly or indirectly to this Agreement or any of the obligations hereunder, and any dispute not otherwise resolved as provided herein shall be litigated solely in said Court. If any provision of this Agreement is determined to be invalid or unenforceable, it shall not affect the validity or enforcement of the remaining provisions hereof.

20. NOTICE. All notices, demands and other communications hereunder shall be in writing and shall be deemed to have been duly given on the date of service if served personally on the party to whom notice is to be given, or on the first business day after mailing if mailed to the party to whom notice is to be given by first class mail, postage prepaid, certified, return receipt requested, addressed to the recipient at the addresses set forth below. Either party may change addresses for purposes of this paragraph by giving the other party notice of the new address in the manner described herein.

FOR THE CITY:	City of Portland ATTN: CITY MANAGER 389 Congress Street Portland, ME 04101
With a copy to:	The Office of the Corporation Counsel at the same address.
FOR CPB2:	CPB2 LLC c/o CPB2 Management LLC P.O. Box 7987 Portland, Maine 04112
With a copy to:	Bernstein, Shur, Sawyer & Nelson, P.A. Attention: Mary E. Costigan, Esq. 100 Middle Street, West Tower Portland, Maine 04101
FOR DOT:	STATE OF MAINE DEPARTMENT OF TRANSPORTATION Attention: Toni Kemmerle, Esq. 16 State House Station Augusta, Maine 04333-0016

21. SIGNATURES; MULTIPLE COUNTERPARTS. This Agreement may be executed in any number of counterparts and by different parties in separate counterparts. Each counterpart when so executed shall be deemed to be an original and all of which together shall constitute one and the same agreement.

22. BROKERS. The CITY, CPB2 and DOT each represent and warrant that they have not dealt with a real estate broker in connection with this transaction. CPB2 agrees to indemnify and hold harmless the CITY and DOT from any claims made by any broker

should CPB2's representation in this paragraph be false. To the extent permitted by law, the CITY and DOT agree to indemnify and hold harmless CPB2 from any claims made by any broker should the representation by the CITY or DOT in this paragraph be false. The foregoing indemnities shall include all legal fees and costs incurred in defense against any such claim, and shall survive the closing.

IN WITNESS WHEREOF, the Parties have hereunto set their hands and seals on the day and year first written above.

CITY OF PORTLAND

Judith Rosen
WITNESS

By: Jon P. Jennings
Jon P. Jennings
Its: City Manager

CPB2 LLC
By: CPB2 Management LLC, Manager

Richard A. Cranton
WITNESS

By: [signature]
Name: CASEY PRENTICE
Its: MANAGER

MAINE DEPARTMENT OF TRANSPORTATION

Melissa Pushard
WITNESS

By: [signature]
David Bernhardt
Its Commissioner

Approved as to Form:
MB
Corporation Counsel's Office

EXHIBIT A

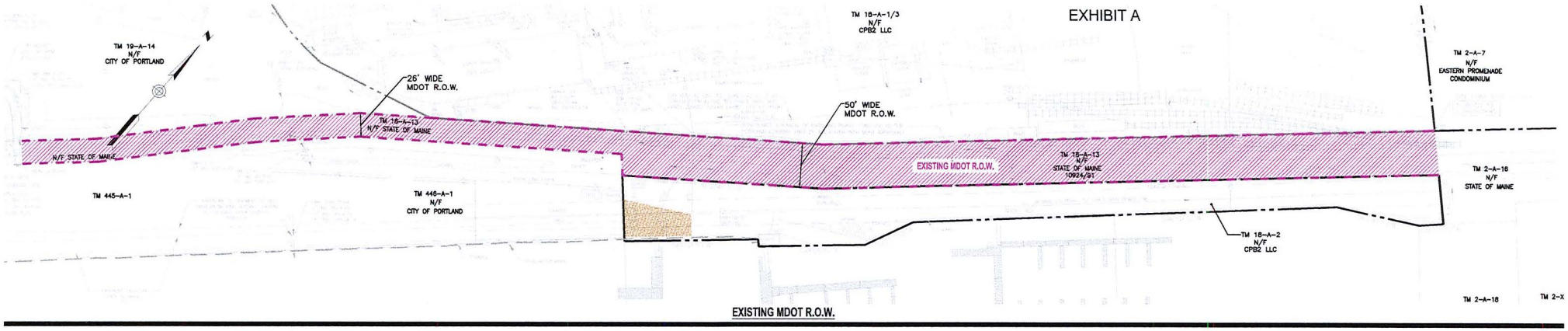

EXISTING MDOT R.O.W.

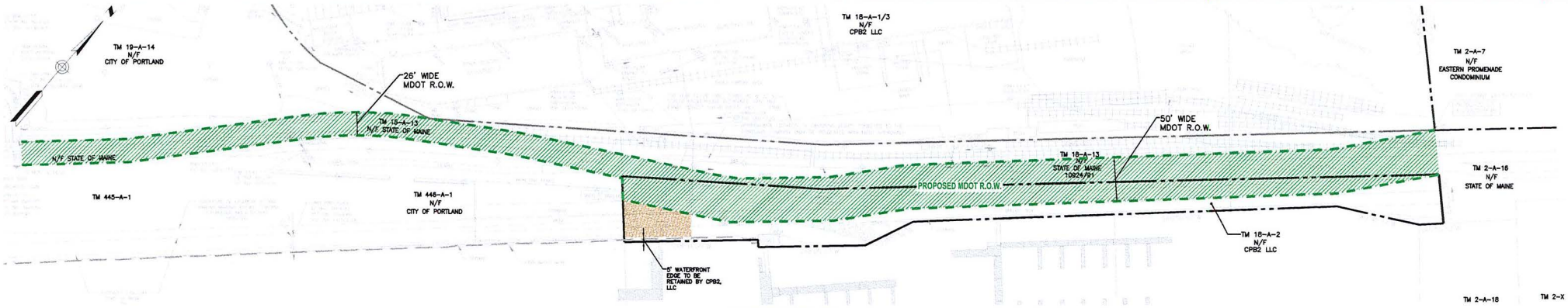

PROPOSED MDOT R.O.W.

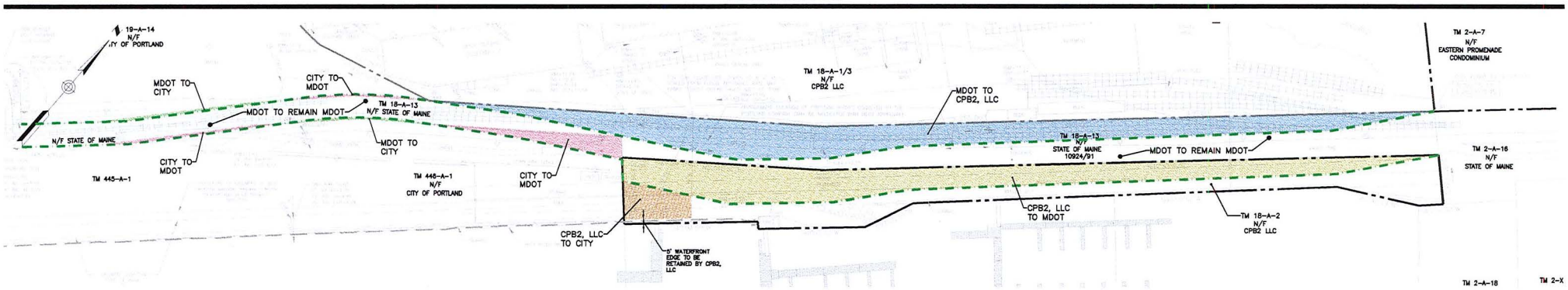

Scale: 1" = 50'
12/1/2016

CPB2 LLC
EASTERN WATERFRONT DEVELOPMENT PORTLAND, MAINE

50' 0 50' 100'
BAR SCALE
1" = 50'
CHECK GRAPHIC SCALE BEFORE USING

PLAN REFERENCE
SOURCE OF EXISTING CONDITIONS: PLAN ENTITLED "BOUNDARY & TOPOGRAPHIC SURVEY AT 58 FORE STREET, PORTLAND, ME" PREPARED BY OWEN HASKELL, INC., FALMOUTH, ME 04105, DATED AUGUST 19, 2016 (REV. DATE 10/3/2016).
HORIZONTAL DATUM: NAD83, MAINE STATE PLAIN, WEST ZONE, US FOOT
VERTICAL DATUM: CITY OF PORTLAND DATUM

PROPOSED LAND TRANSFERS

58 FORE STREET
MDOT R.O.W. FIGURE - 1

WOODARD & CURRAN

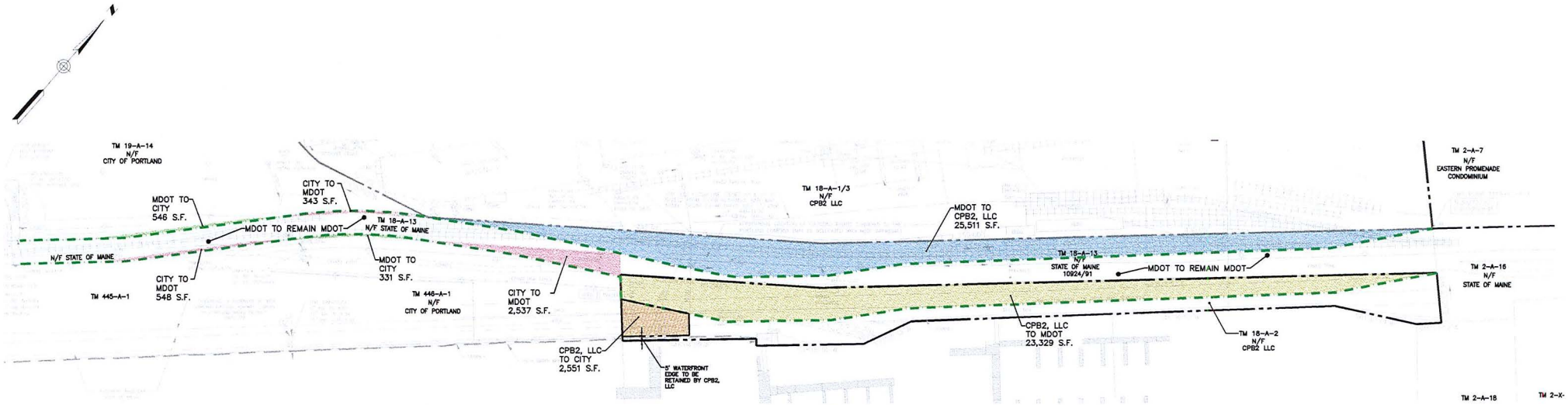

PROPOSED LAND TRANSFERS

CITY

EXISTING CITY LAND TRANSFERRED TO:		NEW CITY LAND TRANSFERRED FROM:	
MDOT	548 S.F.	MDOT	546 S.F.
	343 S.F.		331 S.F.
	2,537 S.F.		
CPB2	0 S.F.	CPB2	2,551 S.F.
	TOTAL: 3,428 S.F.		TOTAL: 3,428 S.F.

MDOT

EXISTING MDOT LAND TRANSFERRED TO:		NEW MDOT LAND TRANSFERRED FROM:	
CITY	546 S.F.	CITY	548 S.F.
	331 S.F.		343 S.F.
			2,537 S.F.
CPB2	25,511 S.F.	CPB2	23,329 S.F.
	TOTAL: 26,388 S.F.		TOTAL: 26,757 S.F.

CPB2

EXISTING CPB2 LAND TRANSFERRED TO:		NEW CPB2 LAND TRANSFERRED FROM:	
CITY	2,551 S.F.	CITY	0 S.F.
MDOT	23,329 S.F.	MDOT	25,511 S.F.
	TOTAL: 25,880 S.F.		TOTAL: 25,511 S.F.

Scale: 1" = 50'
1/10/2017

CPB2 LLC
EASTERN WATERFRONT DEVELOPMENT PORTLAND, MAINE

50' 0 50' 100'
BAR SCALE
1" = 50'
CHECK GRAPHIC SCALE BEFORE USING

PLAN REFERENCE
SOURCE OF EXISTING CONDITIONS: PLAN ENTITLED "BOUNDARY & TOPOGRAPHIC SURVEY AT 58 FORE STREET, PORTLAND, ME" PREPARED BY OWEN HASKELL, INC., FALMOUTH, ME 04105, DATED AUGUST 19, 2016 (REV. DATE 10/3/2016).
HORIZONTAL DATUM: NAD83, MAINE STATE PLAIN, WEST ZONE, US FOOT
VERTICAL DATUM: CITY OF PORTLAND DATUM

58 FORE STREET
MDOT R.O.W. FIGURE - 2

WOODARD & CURRAN

FIRST AMENDMENT TO
EXCHANGE AGREEMENT

THIS FIRST AMENDMENT TO EXCHANGE AGREEMENT (this "Amendment") dated as of the _____ day of January , 2018 (the "Effective Date"), is made by and between the City of Portland, a body politic and corporate, having an address of 389 Congress Street, Portland, Maine ("City"), CPB2 LLC , a Delaware Limited Liability Company , having a mailing address of P.O. Box 7987, Portland, Maine (the "CPB2") and the State of Maine Department of Transportation, an agency of the State of Maine, having a mailing address of 16 State House Station, Augusta, Maine 04333-0016 ("DOT"). All capitalized terms not otherwise defined herein shall have the meaning given them in the Agreement (as such term is defined below).

WHEREAS, the City, CPB2 and DOT entered into a certain Exchange Agreement dated as of June 21, 2017 (the "Agreement");

WHEREAS, Section 10 of the Agreement currently provides for closing to occur on or before the earlier of the date that is 30 days after the date that the City receives the last of the Thames Street Extension Approvals or January 31, 2018; and

WHEREAS, the City, CPB2, and DOT desire to extend the closing date to April 1, 2018;

NOW THEREFORE, in consideration of the mutual covenants and agreements set forth herein below, and for other good and valuable consideration, the parties hereto agree as follows:

1. **Amendment to Agreement.** The first paragraph of Section 10 of the Agreement is hereby amended to replace "January 31, 2018" with "April 1, 2018."

2. **Ratification.** The parties hereto hereby reaffirm and ratify the continued effectiveness of the Agreement as modified by this Amendment. The parties agree, affirm, and reaffirm that each and every term, condition, and covenant of the Agreement, shall continue in effect except as specifically modified by this Amendment.

3. **Amendments, Etc.** No amendment, modification, or waiver of any provision of this Amendment, or consent to any departure from the terms of this Amendment by any party hereto shall be effective unless the same shall be in writing and signed by all the parties hereto, and then such waiver or consent shall be effective only in the specific instance and for the specific purpose for which given.

4. **No Waiver; Remedies.** No failure on the part of any party hereto to exercise, and no delay in exercising, any right hereunder shall operate as a waiver thereof, nor shall any single or partial exercise of any right hereunder preclude any other or further exercise thereof or the exercise of any other right. The remedies herein provided, and provided in the Agreement, are cumulative and not exclusive of any remedies provided by law.

5. **Successors and Assigns.** This Amendment shall be binding upon and inure to the benefit of the parties hereto and their respective successors and assigns.

6. **Severability.** Each provision of this Amendment is intended to be severable and, if any term or provision of this Amendment is determined to be illegal or invalid for any reason whatsoever, such illegality or invalidity shall not affect the validity or legality of the remainder of this Amendment.

7. **Counterparts.** This Amendment may be signed in any number of counterparts, each of which shall be an original and, when taken together, shall constitute one agreement.

IN WITNESS WHEREOF, the parties hereto have caused this Amendment to be executed by a duly authorized officer of each of them as of the date first written above.

CITY OF PORTLAND:

By: _____
Name: Jon P. Jennings
Title: City Manager

CPB2:

By: _____
Name: Casey Prentice
Title: Manager

MAINE DEPARTMENT OF TRANSPORTATION:

By: _____
Name: David Bernhardt
Title: Commissioner

SECOND AMENDMENT TO
EXCHANGE AGREEMENT

THIS SECOND AMENDMENT TO EXCHANGE AGREEMENT (this "Amendment"), dated as of the 3rd day of August, 2018, is made by and between the City of Portland, a body politic and corporate, having an address of 389 Congress Street, Portland, Maine 04101 ("City"), CPB2 I LLC , doing business as CPB2 LLC, a Delaware Limited Liability Company, having a mailing address of Merrill's Wharf, 254 Commercial Street, Suite 118, Portland, Maine 04101 ("CPB2"), and the State of Maine Department of Transportation, an agency of the State of Maine, having a mailing address of 16 State House Station, Augusta, Maine 04333-0016 ("DOT"). All capitalized terms not otherwise defined herein shall have the meaning given them in the Agreement (as such term is defined below).

WHEREAS, the City, CPB2 and DOT entered into a certain Exchange Agreement dated as of June 21, 2017, as amended by a certain First Amendment To Exchange Agreement dated January 2018 (collectively, the "Agreement");

WHEREAS, Section 10 of the Agreement currently provides for closing to occur on or before the earlier of the date that is 30 days after the date that the City receives the last of the Thames Street Extension Approvals or April 1, 2018; and

WHEREAS, the City, CPB2, and DOT desire to affirm the continued effectiveness of the Agreement and to extend further the closing date to December 1, 2018;

NOW THEREFORE, in consideration of the mutual covenants and agreements set forth herein below, and for other good and valuable consideration, the parties hereto agree as follows:

1. **Name and Address Update; Effective Date.** The reference to "CPB2" is hereby amended to replace CPB2 LLC with CPB2 I LLC, doing business as CPB2 LLC, and to update the associated address to Merrill's Wharf, 254 Commercial Street, Suite 118, Portland, Maine 04101. In addition, notwithstanding the date of the Amendment set forth above, the parties hereto agree that the Amendment shall be deemed effective as of March 30, 2018 (the "Effective Date").

2. **Amendment to Agreement.** The first paragraph of Section 10 of the Agreement is hereby amended further to replace "April 1, 2018" with "December 1, 2018."

3. **Ratification.** The parties hereto hereby reaffirm and ratify the continued effectiveness of the Agreement as modified by this Amendment. The parties agree, affirm, and reaffirm that each and every term, condition, and covenant of the Agreement, shall continue in effect except as specifically modified by this Amendment.

4. **Amendments, Etc.** No amendment, modification, or waiver of any provision of this Amendment, or consent to any departure from the terms of this Amendment by any party hereto shall be effective unless the same shall be in writing and signed by all the parties hereto, and then such waiver or consent shall be effective only in the specific instance and for the specific purpose for which given.

5. **No Waiver; Remedies.** No failure on the part of any party hereto to exercise, and no delay in exercising, any right hereunder shall operate as a waiver thereof, nor shall any single or partial exercise of any right hereunder preclude any other or further exercise thereof or the exercise of any other right. The remedies herein provided, and provided in the Agreement, are cumulative and not exclusive of any remedies provided by law.

6. **Successors and Assigns.** This Amendment shall be binding upon and inure to the benefit of the parties hereto and their respective successors and assigns.

7. **Severability.** Each provision of this Amendment is intended to be severable and, if any term or provision of this Amendment is determined to be illegal or invalid for any reason whatsoever, such illegality or invalidity shall not affect the validity or legality of the remainder of this Amendment.

8. **Counterparts.** This Amendment may be signed in any number of counterparts, each of which shall be an original and, when taken together, shall constitute one agreement.

[END OF DOCUMENTS; SIGNATURES ON NEXT PAGE]

IN WITNESS WHEREOF, the parties hereto have caused this Amendment to be executed by a duly authorized officer of each of them as of the date first written above.

CITY OF PORTLAND

By: _____
Name: Jon P. Jennings
Title: City Manager

APPROVED AS TO FORM:
_____
CORPORATION COUNSEL'S OFFICE

CPB2 I LLC
By: CPB2 Management LLC, Manager

By: _____
Name: Casey W. Prentice
Title: Manager

MAINE DEPARTMENT OF TRANSPORTATION

By: _____
Name: David Bernhardt
Title: Commissioner

THIRD AMENDMENT TO
EXCHANGE AGREEMENT

THIS THIRD AMENDMENT TO EXCHANGE AGREEMENT (this "Amendment"), dated as of the 4th day of ~~February~~ March, 2019, is made by and between the City of Portland, a body politic and corporate, having an address of 389 Congress Street, Portland, Maine 04101 ("City"), CPB2 I LLC, doing business as CPB2 LLC, a Delaware Limited Liability Company, having a mailing address of Merrill's Wharf, 254 Commercial Street, Suite 118, Portland, Maine 04101 ("CPB2"), and the State of Maine Department of Transportation, an agency of the State of Maine, having a mailing address of 16 State House Station, Augusta, Maine 04333-0016 ("DOT"). All capitalized terms not otherwise defined herein shall have the meaning given them in the Agreement (as such term is defined below).

WHEREAS, the City, CPB2 and DOT entered into a certain Exchange Agreement dated as of June 21, 2017, as amended by a certain First Amendment To Exchange Agreement dated January 2018 and by a certain Second Amendment To Exchange Agreement dated as of August 3, 2018 (collectively, the "Agreement");

WHEREAS, Section 10 of the Agreement currently provides for closing to occur on or before the earlier of the date that is 30 days after the date that the City receives the last of the Thames Street Extension Approvals or December 1, 2018; and

WHEREAS, the City, CPB2, and DOT desire to affirm the continued effectiveness of the Agreement and to extend further the closing date to June 4, 2019;

NOW THEREFORE, in consideration of the mutual covenants and agreements set forth herein below, and for other good and valuable consideration, the parties hereto agree as follows:

1. **Effective Date**. Notwithstanding the date of this Amendment set forth above, the parties hereto agree that this Amendment shall be deemed effective as of December 1, 2018.

2. **Amendment to Agreement.** The first paragraph of Section 10 of the Agreement, as previously amended, is hereby deleted in its entirety and replaced by the following: "Time is of the essence in the performance of this Agreement. The closing shall be held at the offices of CPB2's counsel at a time agreeable to the Parties on June 4, 2019, or such later date approved by the Parties. If the City has not received the last of the Thames Street Extension Approvals, as that term is defined below, as of the closing date, then the Parties may, upon the mutual agreement of the Parties, extend further the closing date to a later date agreed to by the Parties. At the closing:"

3. **Ratification.** The parties hereto hereby reaffirm and ratify the continued effectiveness of the Agreement as modified by this Amendment. The parties agree, affirm, and reaffirm that each and every term, condition, and covenant of the Agreement, shall continue in effect except as specifically modified by this Amendment.

4. **Amendments, Etc.** No amendment, modification, or waiver of any provision of this Amendment, or consent to any departure from the terms of this Amendment by any party hereto shall be effective unless the same shall be in writing and signed by all the parties hereto,

and then such waiver or consent shall be effective only in the specific instance and for the specific purpose for which given.

5. **No Waiver; Remedies.** No failure on the part of any party hereto to exercise, and no delay in exercising, any right hereunder shall operate as a waiver thereof, nor shall any single or partial exercise of any right hereunder preclude any other or further exercise thereof or the exercise of any other right. The remedies herein provided, and provided in the Agreement, are cumulative and not exclusive of any remedies provided by law.

6. **Successors and Assigns.** This Amendment shall be binding upon and inure to the benefit of the parties hereto and their respective successors and assigns.

7. **Severability.** Each provision of this Amendment is intended to be severable and, if any term or provision of this Amendment is determined to be illegal or invalid for any reason whatsoever, such illegality or invalidity shall not affect the validity or legality of the remainder of this Amendment.

8. **Counterparts.** This Amendment may be signed in any number of counterparts, each of which shall be an original and, when taken together, shall constitute one agreement.

[END OF DOCUMENTS; SIGNATURES ON NEXT PAGE]

IN WITNESS WHEREOF, the parties hereto have caused this Amendment to be executed by a duly authorized officer of each of them as of the date first written above.

CITY OF PORTLAND

APPROVED AS TO FORM:
CORPORATION COUNSEL

By:_____
Name: Jon P. Jennings
Title: City Manager

CPB2 I LLC
By: CPB2 Management LLC, Manager

By:_____
Name: Casey W. Prentice
Title: Manager

MAINE DEPARTMENT OF TRANSPORTATION

By:_____
Name: Bruce A. Van Note
Title: Commissioner

IN WITNESS WHEREOF, the parties hereto have caused this Amendment to be executed by a duly authorized officer of each of them as of the date first written above.

CITY OF PORTLAND

By:_____
Name: Jon P. Jennings
Title: City Manager

CPB2 I LLC
By: CPB2 Management LLC, Manager

By:_____
Name: Casey W. Prentice
Title: Manager

MAINE DEPARTMENT OF TRANSPORTATION

By: _____
Name: Bruce A. Van Note
Title: Commissioner

FOURTH AMENDMENT TO EXCHANGE AGREEMENT

THIS FOURTH AMENDMENT TO EXCHANGE AGREEMENT (this "Amendment"), dated as of the 13th day of June, 2019, is made by and between the City of Portland, a body politic and corporate, having an address of 389 Congress Street, Portland, Maine 04101 ("City"), CPB2 I LLC, doing business as CPB2 LLC, a Delaware Limited Liability Company, having a mailing address of Merrill's Wharf, 254 Commercial Street, Suite 118, Portland, Maine 04101 ("CPB2"), and the State of Maine Department of Transportation, an agency of the State of Maine, having a mailing address of 16 State House Station, Augusta, Maine 04333-0016 ("DOT"). All capitalized terms not otherwise defined herein shall have the meaning given them in the Agreement (as such term is defined below).

WHEREAS, the City, CPB2 and DOT entered into a certain Exchange Agreement dated as of June 21, 2017, as amended by a certain First Amendment To Exchange Agreement dated January 2018, by a certain Second Amendment To Exchange Agreement dated as of August 3, 2018 and by a certain Third Amendment To Exchange Agreement dated as of March 4, 2019 (collectively, the "Agreement");

WHEREAS, Section 10 of the Agreement currently provides for closing to occur on June 4, 2019, or such later date approved by the Parties; and

WHEREAS, the City, CPB2, and DOT desire to affirm the continued effectiveness of the Agreement and to extend further the closing date to June 30, 2020;

NOW THEREFORE, in consideration of the mutual covenants and agreements set forth herein below, and for other good and valuable consideration, the parties hereto agree as follows:

1. **Effective Date**. Notwithstanding the date of this Amendment set forth above, the parties hereto agree that this Amendment shall be deemed effective as of June 4, 2019.

2. **Amendment to Agreement**. The first paragraph of Section 10 of the Agreement, as previously amended, is amended further to replace "June 4, 2019" with "June 30, 2020."

3. **Ratification**. The parties hereto hereby reaffirm and ratify the continued effectiveness of the Agreement as modified by this Amendment. The parties agree, affirm, and reaffirm that each and every term, condition, and covenant of the Agreement, shall continue in effect except as specifically modified by this Amendment.

4. **Amendments, Etc**. No amendment, modification, or waiver of any provision of this Amendment, or consent to any departure from the terms of this Amendment by any party hereto shall be effective unless the same shall be in writing and signed by all the parties hereto, and then such waiver or consent shall be effective only in the specific instance and for the specific purpose for which given.

5. **No Waiver; Remedies**. No failure on the part of any party hereto to exercise, and no delay in exercising, any right hereunder shall operate as a waiver thereof, nor shall any

single or partial exercise of any right hereunder preclude any other or further exercise thereof or the exercise of any other right. The remedies herein provided, and provided in the Agreement, are cumulative and not exclusive of any remedies provided by law.

6. **Successors and Assigns.** This Amendment shall be binding upon and inure to the benefit of the parties hereto and their respective successors and assigns.

7. **Severability.** Each provision of this Amendment is intended to be severable and, if any term or provision of this Amendment is determined to be illegal or invalid for any reason whatsoever, such illegality or invalidity shall not affect the validity or legality of the remainder of this Amendment.

8. **Counterparts.** This Amendment may be signed in any number of counterparts, each of which shall be an original and, when taken together, shall constitute one agreement.

[END OF DOCUMENTS; SIGNATURES ON NEXT PAGE]

IN WITNESS WHEREOF, the parties hereto have caused this Amendment to be executed by a duly authorized officer of each of them as of the date first written above.

CITY OF PORTLAND

By: _____
Name: Jon P. Jennings
Title: City Manager

APPROVED AS TO FORM:
_____
CORPORATION COUNSEL'S OFFICE

CPB2 I LLC
By: CPB2 Management LLC, Manager

By: _____
Name: Casey W. Prentice
Title: Manager

MAINE DEPARTMENT OF TRANSPORTATION

By: _____
Name: Bruce A. Van Note
Title: Commissioner

STATE OF MAINE
DEPARTMENT OF TRANSPORTATION

MASTER UTILITY LICENSE

This License, made in duplicate this 2nd day of April, 2019, by and between the **STATE OF MAINE DEPARTMENT OF TRANSPORTATION** (hereinafter called "DEPARTMENT") and **CPB2 1 LLC**, a Delaware Limited Liability Company, with a mailing address of Merrill's Wharf, 254 Commercial Street, Suite 118, Portland, ME 04101 (hereinafter called "LICENSEE").

WITNESSETH:

WHEREAS, LICENSEE herein acknowledges that the term DEPARTMENT, wherever used in this License shall include not only the Maine Department of Transportation, but also any operator licensed by the Department of Transportation to provide rail service over the Berlin Subdivision rail line; and,

WHEREAS, LICENSEE and DEPARTMENT are desirous of entering into a Master Utility License (hereinafter called "License") regarding the construction, installation, maintenance, repair and use of the following underground utilities:

> Transmission and distribution of electrical energy, telecommunications, water, sewer, storm water drain, and diesel and gas fuel lines (hereinafter collectively called "Facilities") under the railroad property and tracks of DEPARTMENT in the City of Portland, Cumberland County, State of Maine;

NOW THEREFORE, for the mutual benefits between the parties, it is hereby understood and agreed as follows:

1. Permit for Facilities

DEPARTMENT agrees that it will permit LICENSEE to construct, install, maintain, repair and use the Facilities at or near railroad milepost 0.35 located under the property and tracks of DEPARTMENT located in the City of Portland, as shown on Attachment A attached hereto and by reference made a part hereof, subject to the terms and conditions hereinafter set out.

2. Specifications

(a) LICENSEE shall, at its sole expense, prior to the installation of any Facilities, submit plans and specifications which shall meet DEPARTMENT'S Standard Specifications (latest edition), as well as the provisions of applicable statutes, orders, rules or regulations of any competent public authority having jurisdiction in the matter.

(b) If, any of DEPARTMENT'S Standard Specifications conflict with any statutes or with any orders, rules, or regulations of any competent public authority having jurisdiction in the matter, then such statutes, orders, rules, or regulations shall prevail, but in all other particulars DEPARTMENT'S Standard Specifications shall govern.

(c) In the event that there is any issue which concerns DEPARTMENT and which is not addressed by the DEPARTMENT'S Standard Specifications or by any statutes, orders, rules, or regulations of any competent public authority having jurisdiction in the matter hereinabove described, the Director of Rail Transportation of Department shall in all such cases have the final decision-making authority as to the acceptability of the installation proposed.

(d) LICENSEE shall, at its sole expense, construct and install, and at all times during the term of this License, maintain Facilities in accordance with the design indicated on the aforesaid plans and specifications.

3. Construction and Maintenance

(a) Should emergency work be necessary, LICENSEE shall make every reasonable effort to notify DEPARTMENT that such work is to be done. In the event of an emergency, contact should be made to the following:

DEPARTMENT:	Director, Rail Transportation (207) 624-3042
LICENSEE:	CPB2 1 LLC (207) 517-1100, ext. 1

(b) LICENSEE, in constructing, installing, maintaining, repairing and using Facilities, shall exercise every reasonable precaution and use all reasonable diligence to avoid interference with the operation of trains, locomotives and maintenance-of-way equipment, or with the use and enjoyment of the property by DEPARTMENT or its independent operators.

(c) LICENSEE shall, except in emergency situations, give not less than ten (10) days written notice to DEPARTMENT of the day and hour it proposes to construct, install, repair, remove or maintain the Facilities. In the event DEPARTMENT considers the time specified in such notice to be unsatisfactory or inconvenient, DEPARTMENT shall, within five (5) days after receipt of such notice, notify LICENSEE to that effect in writing and shall specify a time satisfactory or convenient to DEPARTMENT.

(d) If LICENSEE shall fail to properly maintain Facilities or if Facilities interfere with drainage or other uses of DEPARTMENT**'s** property, then DEPARTMENT may order repairs to the construction at LICENSEE's expense or may (but shall have no obligation to do so) make such repairs to the Facilities of LICENSEE as may be immediately necessary for the safety of trains and property of DEPARTMENT. DEPARTMENT shall promptly notify LICENSEE of the making of such repairs. DEPARTMENT shall not incur any liability as a result of performing such repairs and the provisions of Paragraph 6 shall apply.

(e) LICENSEE agrees to pay to DEPARTMENT the cost of such repairs on or before the fifteenth (15th) day of the month next succeeding that in which a bill therefore is rendered.

4. Use

LICENSEE shall use Facilities solely for purposes of delivery of utilities and services to the adjoining marina currently owned by PF Marina LLC and LICENSEE shall make no change in the Facilities without first obtaining, in writing, the approval of DEPARTMENT. LICENSEE shall be solely responsible for acquiring and complying with federal, state or local permits required for its intended use.

5. Protection of Other Utilities

LICENSEE shall protect power, communication, signal and other utility lines and facilities on, over, or under the property of DEPARTMENT from damage of any kind by or because of the construction, installation, maintenance, repair, relocation, removal or use of said Facilities, and shall construct, install, maintain and use said Facilities in such a manner as will not damage or injuriously affect the use of power, communication, signal or other utility uses of DEPARTMENT or other companies which may have under contract the right to maintain such facilities on the property of DEPARTMENT.

6. Liability and Risk

(a) LICENSEE and DEPARTMENT agree that all cost or expense resulting from any and all loss of life or property, or injury or damage to the person or property of any person, firm or corporation (including the parties hereto and their respective officers, agents and employees), and any and all claims, demands or actions for such loss, injury or damage, caused by or arising out of the presence or use, or the construction, installation, maintenance, repair, relocation or removal of Facilities, shall be borne by LICENSEE. LICENSEE shall also bear the cost of inspections performed by DEPARTMENT to determine whether LICENSEE is in compliance with this License.

(b) LICENSEE assumes all risk of loss or damage to LICENSEE**'s** property, inclusive of free or unused materials, supplies and equipment, however caused, resulting directly or indirectly, by reason of the construction, installation, maintenance, repair, relocation, use, existence or removal of Facilities, and hereby releases DEPARTMENT from any and all liability on account of such loss or damage, whether or not the negligence of DEPARTMENT caused thereto in whole or in part.

7. Insurance

LICENSEE shall at all times carry personal property and equipment insurance sufficient to cover the value of all of LICENSEE'S personal property and equipment on the DEPARTMENT'S property. LICENSEE shall carry commercial general liability insurance coverage in an amount not less than $2,000,000.00 for both personal injury and property damage occurring as a result of

LICENSEE'S activities and presence on, and its use, alteration and occupation of any of the DEPARTMENT"S property. This coverage shall apply to any and all claims or causes of action resulting in death, bodily injury or property damage and shall be applicable to all such claims brought by any person or arising out of any single occurrence or in the aggregate. LICENSEE shall provide proof of the above-described insurances upon request by the DEPARTMENT. Failure to maintain this required insurance coverage shall result in the automatic termination of this License.

8. Changes or Relocation

LICENSEE shall, at its sole expense, within ninety (90) days after receipt of written notice from DEPARTMENT, make such changes in the Facilities, including relocation, as may be required by DEPARTMENT, if such changes or relocation shall, in the judgment of DEPARTMENT, be needed for the better development, or use of the property of DEPARTMENT, or if such changes or relocation shall, in the judgment of DEPARTMENT, be needed to protect its requirements, or contractual obligations, or if such change or relocation is required, directly or indirectly by statute or by any order of any competent public authority having jurisdiction in the matter. Provided, however, that the term "contractual obligation" used in this paragraph shall not be construed as including obligations similar hereto, entered into subsequent to the date of this License.

9. Discontinuance

LICENSEE shall, at its sole expense, upon termination of this License, or upon the abandonment or discontinuance of use of the Facilities, promptly remove its property from the premises of DEPARTMENT and restore such premises disturbed by the construction to a condition satisfactory to DEPARTMENT.

10. Cost of Changes

If LICENSEE fails to change or relocate the Facilities within ninety (90) days after the expiration of notice given as provided in Paragraph 8 hereof, or to remove its property as provided in Paragraph 9 hereof, DEPARTMENT may, without further notice, in case of necessary alteration, and in the case of apparent abandonment, after written notice sent to LICENSEE and the expiration of five (5) days after such notice is sent, remove, change or relocate the Facilities and render bills for the cost of such removal, change or relocation to LICENSEE which bills LICENSEE agrees to pay on or before the fifteenth (15th) of the month next succeeding that in which such bill is rendered.

11. Taxes

LICENSEE shall pay all taxes assessed upon the Facilities, if assessed or on account of the existence or use of the Facilities, and shall indemnify DEPARTMENT against the payment of such taxes.

12. Waiver

It is expressly understood and agreed that any waiver on the part of DEPARTMENT of any term, provision or covenant of this License shall not constitute a precedent, nor bind DEPARTMENT to a waiver of any similar or succeeding breach of same or any other terms, provisions or covenants of this License.

13. Execution Official Act Only

The individuals executing this License on behalf of DEPARTMENT do so only in their official capacity and none of the covenants herein contained are to be held or construed as their individual acts, or acts for which they may be individually liable in any way. In exercising the rights granted hereunder, LICENSEE shall not be deemed to be acting as an officer, agent, or employee of the State of Maine.

14. No Warranty of Title

No warranty of title to any property is given hereunder, and the permission herein given to LICENSEE is subject to all encumbrances, conditions and reservations upon or under which DEPARTMENT holds its property. The rights of LICENSEE are limited solely to the License herein granted and LICENSEE shall not acquire by virtue of this License or otherwise any easement or other greater interest in the property of DEPARTMENT.

15. Fees and Rental

(a) LICENSEE shall pay to DEPARTMENT an administrative fee of One Hundred Dollars ($100.00) for expenses in connection with the preparation and execution of this License. LICENSEE shall further pay to DEPARTMENT a fee of One Hundred Dollars ($100.00) for expenses incurred in connection with the examination of each set of plans and specifications submitted for any *new* Facilities constructed after the date of this License.

(b) LICENSEE shall pay to DEPARTMENT for the privileges herein granted and for inspection expenses the sum of; $25 per annum for water line, $25 per annum for Drainage pipe 12 inches or less in diameter, $50 per annum for Drainage pipe greater than 12 inches in diameter, $50 per annum for manhole or catch basin, $100 per annum for each fiber optic crossing, $50.00 per annum for each electric wire crossing up to 7.2 KV, $75.00 per annum for each electric wire crossing from 7.2 KV up to 34.5 KV, $100.00 per annum for each electric wire crossing from 34.5 KV up to 115 KV, $150.00 per annum for each electric wire crossing from 115 KV up to 345 KV, $50/inch for pipelines carrying flammable substances 12 inches or less in diameter per annum, $75/inch for pipelines carrying flammable substances greater than 12 inches in diameter per annum and $1.00 per foot for longitudinal lines (aerial or underground) per annum. The annual charges are to be payable in advance each year to "Treasurer, State of Maine." on the date of this License and on each anniversary date. The current sites and charges for each underground utility are delineated in Attachment B, attached hereto and by reference made a part hereof.

(c) Department reserves the right to review the rental rate at each five-year (5) anniversary date of this License. Written notice will be provided to Licensee of any rate adjustment at least thirty (30) days before the effective date of the rent increase.

(d) Attachment B shall be updated by the deletion or addition of any Facilities whenever applicable, but shall at all times reflect the locations of all such Facilities in existence, and no Facility shall be deemed valid unless it appears on an amended Attachment B.

16. Notification

All communications and notices required or permitted under this License shall be in writing and shall be deemed sufficiently served if served in hand or by certified mail addressed as follows or such other address as each party may designate in writing from time to time:

TO DEPARTMENT:

State of Maine
Department of Transportation
#16 State House Station
Augusta, Maine 04333-0016

Attention: Director, Rail Program

TO LICENSEE:

CPB2 1 LLC
Merrill's Wharf
254 Commercial Street, Ste 118
Portland, Maine 04101

Primary Contact: Casey W. Prentice @
cwp@portlandforeside.com

17. Subordinate to Railroad Operations

The Utility Crossing rights are expressly subordinate to all rights of the DEPARTMENT, and of the Trust for the Preservation of Maine Industrial History and Technology (the "Narrow Gauge Railroad") pursuant to its lease with the DEPARTMENT, and subject to termination at the DEPARTMENT'S discretion if the DEPARTMENT determines that the Utility Crossing Rights interfere in any way with the safe and efficient operation of any rail service performed thereon. In such instance, the DEPARTMENT will provide the LICENSEE with at least ninety (90) days' prior written notice of termination unless such termination is required because of safety concerns, in which case, the DEPARTMENT reserves the right to terminate the License immediately, or with a notice period shorter than ninety (90) days at the DEPARTMENT'S sole discretion.

18. Termination

Except as provided in Paragraph 17 above and/or in the event of public safety concerns, the LICENSEE agrees that any and all rights conveyed by this License may be terminated and revoked by the DEPARTMENT if the DEPARTMENT in its sole discretion determines: a) that the rail line is needed for transportation purposes; b) that the use of the rail line as permitted by this License impairs or compromises the public safety; or c) that the LICENSEE has breached the terms and conditions of this License. In the event of such termination, unless the termination is associated with a public safety issue, the DEPARTMENT shall give the LICENSEE written notice, which shall provide that the LICENSEE has ninety (90) days to discontinue its use of the rail line and remove any improvement therefrom if so directed by the DEPARTMENT at the LICENSEE'S sole expense. The LICENSEE shall not be entitled to compensation in the event the DEPARTMENT terminates this License for any reason.

19. Successors

This License shall inure to the benefit of and be binding upon the parties hereto, their successors or assigns, provided that LICENSEE shall not transfer, assign or permit the use of the Facilities hereby granted by any person or corporation (other than PF Marina LLC, or its successors or assigns) without the prior consent and agreement, in writing, of the DEPARTMENT.

20. Survival

Any covenants and representations contained herein, and any obligations which by their nature can be or are to be performed after the termination of this License, shall survive such termination.

IN WITNESS WHEREOF, the parties have executed this License on the date first written above.

LICENSOR:

STATE OF MAINE DEPARTMENT
OF TRANSPORTATION

Witness

By: _____
Nathan Moulton, Director
Office of Freight and Business Services

LICENSEE:

CPB2 1 LLC

Witness

By: _____
Casey W. Prentice
CPB2 Management LLC, Manager

ATTACHMENT A

Facilities Map

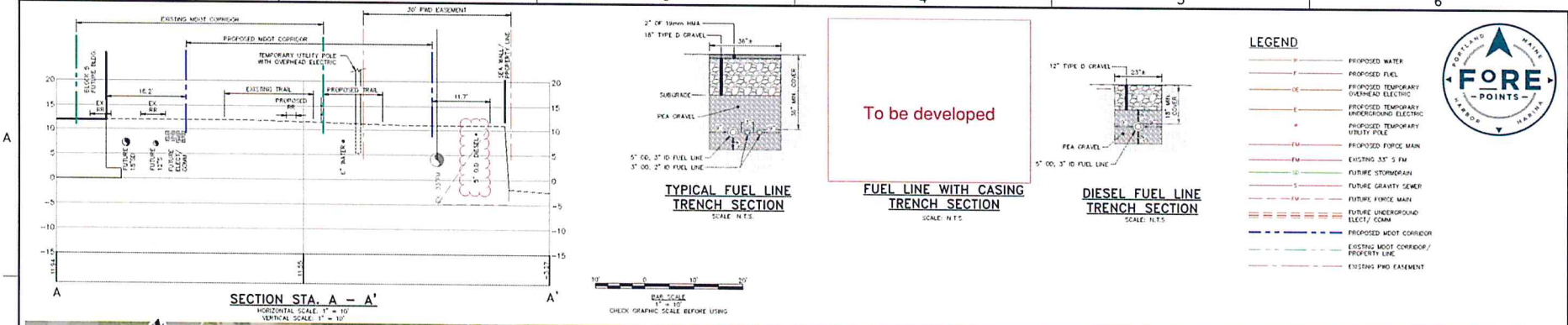

SECTION STA. A – A'

HORIZONTAL SCALE: 1" = 10'
VERTICAL SCALE: 1" = 10'

TYPICAL FUEL LINE TRENCH SECTION

SCALE: N.T.S.

To be developed

FUEL LINE WITH CASING TRENCH SECTION

SCALE: N.T.S.

DIESEL FUEL LINE TRENCH SECTION

SCALE: N.T.S.

BAR SCALE
1" = 10'
CHECK GRAPHIC SCALE BEFORE USING

LEGEND

- PROPOSED WATER
- PROPOSED FUEL
- PROPOSED TEMPORARY OVERHEAD ELECTRIC
- PROPOSED TEMPORARY UNDERGROUND ELECTRIC
- PROPOSED TEMPORARY UTILITY POLE
- PROPOSED FORCE MAIN
- EXISTING 33" S FM
- FUTURE STORMDRAIN
- FUTURE GRAVITY SEWER
- FUTURE FORCE MAIN
- FUTURE UNDERGROUND ELECT/ COMM
- PROPOSED MDOT CORRIDOR
- EXISTING MDOT CORRIDOR/ PROPERTY LINE
- EXISTING PRO EASEMENT

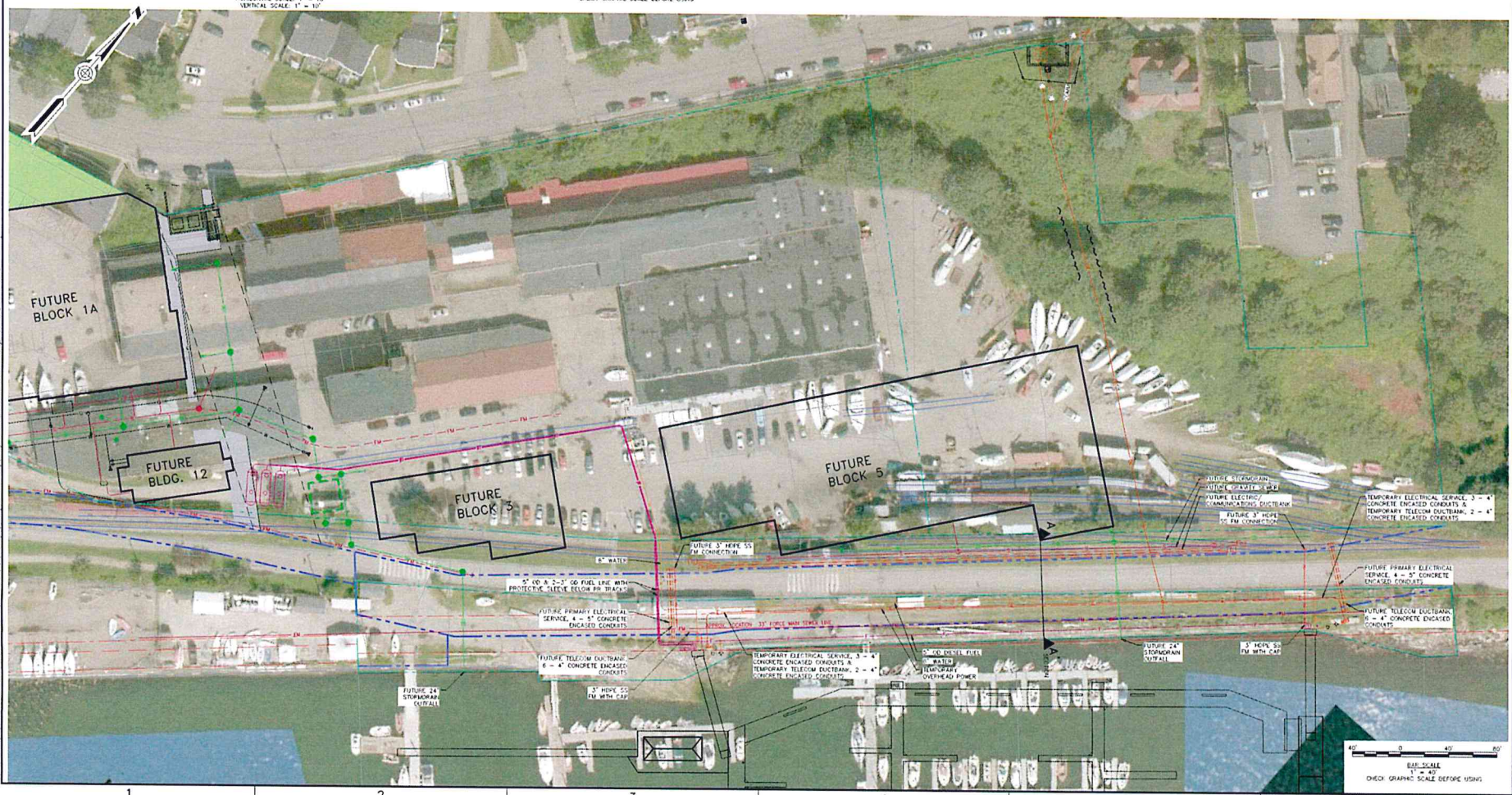

BAR SCALE
1" = 40'
CHECK GRAPHIC SCALE BEFORE USING

FORE POINTS

41 Hutchins Drive
Portland, Maine 04102
800.426.4262 | www.woodardcurran.com

COMMITMENT & INTEGRITY DRIVE RESULTS

THIS DOCUMENT IS THE PROPERTY OF WOODARD & CURRAN, INC. AND ITS CLIENT AND IS NOT TO BE USED FOR ANY PURPOSE OR MODIFICATION WITHOUT WRITTEN PERMISSION OF WOODARD & CURRAN, INC.

REV	DESCRIPTION	DATE
1	REVISIONS PER CITY COMMENTS	11/26/18

DESIGNED BY: KJT
DRAWN BY: BCM
CHECKED BY: ECC
CERTIFICATION BLOCK

MARINA UTILITY FIGURE

PF MARINA, LLC
PORTLAND, MAINE

FORE POINTS
MARINA SITE PLAN APPLICATION

JOB NO.: 227007.50
DATE: JANUARY 15, 2019
SCALE: AS NOTED
SHEET: 1 OF 1

FIG. 1

24x36 SHEET

ATTACHMENT B

Underground Utilities

Milepost	Stationing	Railroad Val Plan	Remarks	Annual Fee
.35		V-26, Sheet 24	Underground 24" storm drain pipe (eastern gangway)	$50
.35		V-26, Sheet 24	Underground 24" storm drain pipe (western gangway)	$50
.35		V-26, Sheet 24	Underground 6" water line to run longitudinally within the ROW for 545'.	$545
.35		V-26, Sheet 24	Underground 5" diesel fuel line, double wall pipe (monitored and alarmed); contained within a single protective sleeve under RR tracks	$250
.35		V-26, Sheet 24	Underground 3" Diesel fuel line (monitored and alarmed) contained within 2 single protective sleeves under RR tracks	$150
.35		V-26, Sheet 24	Underground 3" gasoline double wall fuel lines (monitored and alarmed) contained within a single protective sleeve under RR tracks	$150
.35		V-26, Sheet 24	Underground 12.47 KV Primary Electrical Service; four 5" concrete encased conduits located within an electrical duct bank (eastern gangway)	$75
.35		V-26, Sheet 24	Underground 12.47 KV Primary Electrical Service; four 5" concrete encased conduits located within an electrical duct bank (western gangway)	$75
.35		V-26, Sheet 24	Underground Telecom service six 4"concrete encased conduits located within a Telecom duct bank	$100
.35		V-26, Sheet 24	Underground Telecom service six 4" concrete encased conduits located within a Telecom duct bank	$100
.35		V-26, Sheet 24	3" HDPC 55 FM with cap (eastern gangway)	$25
.35		V-26, Sheet 24	3" HDPC 55 FM with cap (western gangway)	$25

TOTAL ANNUAL FEE: $1595

PUBLIC ACCESS EASEMENT

KNOW ALL PERSONS BY THESE PRESENTS, that CPB2 I LLC, a Delaware limited liability company, with a place of business in Portland, Maine and mailing address of Merrill's Wharf, 254 Commercial Street, Suite, 118, Portland, Maine 04101 (the "Grantor"), FOR CONSIDERATION PAID, hereby GRANTS to the CITY OF PORTLAND, a Maine body corporate and politic, with a mailing address of City Hall, 389 Congress Street, Portland, Maine 04101 (the "Grantee" or the "City"), a fifty-foot wide public access easement (the "Access Easement") for the purpose described below, across a portion of Grantor's property in Portland, Maine, running from Fore Street to the southerly boundary of Grantor's property, in the general location depicted on the drawing attached hereto as Exhibit A and made a part hereof (the "Easement Area"), subject to the terms set forth below. The precise location of the Easement Area shall be flexible prior to final design and construction of permanent improvements to the Easement Area. When the final design of the Easement Area has been completed and prior to construction of said improvements, the Easement Area shall be more particularly described by metes and bounds in an Addendum to this Access Easement, signed by both Parties and recorded in the Cumberland County Registry of Deeds.

The purpose of the Access Easement granted herein is to provide physical and visual public access to the waterfront for pedestrians within the Easement Area, which access shall include an ADA compliant access way for pedestrians, including but not limited to wheelchair access on the southern end of the Easement Area. Additional accommodations may be provided if and as required by applicable state or federal law, including the ADA.

The Easement Area shall be subject to such rules or ordinances that Grantee may adopt from time to time in the interests of public safety. Wheelchairs and emergency vehicles as well as snow removal equipment shall be permitted in accordance with applicable federal and/or state laws regulating accessibility for such devices, vehicles or equipment. Maintenance, repair and snow removal responsibilities within the Easement Area shall belong solely to Grantor, its successors and assigns; however, Grantee shall have the right, but not the obligation, to maintain or repair the Easement Area, or to remove snow therefrom, when Grantee, in its sole discretion, deems such maintenance, repair or snow removal necessary to ensure public safety and Grantor has failed to perform the same within a reasonable time after notice from Grantee.

Grantor agrees not to use or permit any use, condition or state of disrepair that would be contrary to or otherwise unreasonably interfere with the use of the Easement Area by pedestrians in the manner contemplated herein. Provided, however, Grantor may temporarily close all or a portion of the Easement Area during construction, maintenance or repair activities if required to safeguard public safety. Grantor shall promptly correct any condition and complete any maintenance or construction activities necessitating such closure in order to minimize the duration of the closure or restriction of public access to the Easement Area. Any closures that prevent public access from Fore Street through to the waterfront shall be pursuant to and in accordance with an Access Easement Closure plan filed with and approved in advance by the City of Portland's Planning Authority.

Nothing herein contained shall be deemed to be a gift or dedication of the fee interest in the Easement Area or any portion thereof to Grantee or to the general public.

The Easement Area is and shall remain private property, and Grantor hereby expressly reserves and retains for itself and for any subsequent owner of the Easement Area, all rights of ownership to the extent the exercise thereof does not unreasonably limit or unreasonably interfere with the use of the Easement Area by pedestrians; such rights include, without limitation, (i) the right to adopt reasonable rules and regulations governing the use of the Easement Area, (ii) the right to use, or to grant to others the right to use, the surface and subsurface of and air space above the Easement Area for any use or purpose (including, without limitation, the right to install, inspect, operate, maintain, repair, replace and remove electric lines, gas lines, underground fuel tanks, telecommunication lines (such as telephone, cable and internet lines), water lines, storm sewers, sanitary sewers, catch basins, manholes, clean-outs, curbing, driveways, surface parking areas, sidewalks, landscaping, benches, information kiosks, light pole bases, lighting fixtures, retaining walls, monument signs, fountains, statues, art pieces and the like, and (iii) the right to make changes, alterations and/or improvements to the Easement Area from time to time.

This easement is given for recreational use and the Grantor and Grantee claim the rights and protections against liability in accordance with Title 14 MRS §159-A to the maximum extent permitted by law.

TO HAVE AND TO HOLD the aforegranted and bargained public access easement, with all privileges and appurtenances thereof, to the Grantee, its successors and assigns, to its and their use and behoof, forever.

IN WITNESS WHEREOF, the Grantor has caused this instrument to be executed by Casey Prentice, its Manager thereunto duly authorized, this 27 day of March, 2019.

CPB2 I LLC
By: CPB2 Management LLC, Manager

By: _____
Name: Casey Prentice
Title: Manager

STATE OF MAINE
CUMBERLAND, ss

March 27, 2019

Personally appeared the above-named Casey Prentice, for CPB2 I LLC as aforesaid, and acknowledged the foregoing instrument to be his/her free act and deed in his/her said capacity and the free act and deed of said limited liability company.

Before me,
Janet L. Davis
Notary Public/Attorney at Law

Print name: Janet L. Davis SEAL
My commission expires: 01-18-2021

JANET L. DAVIS
NOTARY PUBLIC
State of Maine
My Commission Expires
January 18, 2021

GRANTEE ACCEPTANCE:

The City of Portland does hereby accept the foregoing Public Access Easement, by and through City Manager Jon Jennings.

CITY OF PORTLAND

By: Jon Jennings
Its: City Manager

STATE OF MAINE
CUMBERLAND, ss

March 28th, 2019

Personally appeared the above-named Jon Jennings, for the City of Portland as aforesaid, and acknowledged the foregoing instrument to be his free act and deed in his said capacity and the free act and deed of said City of Portland.

Before me,

Notary Public/Attorney at Law

Print name: Deivy Periana
My commission expires: April 9, 2021

DEIVY PERIANA
NOTARY PUBLIC
CUMBERLAND COUNTY
MAINE
MY COMMISSION EXPIRES APRIL 9, 2021

Exhibit A

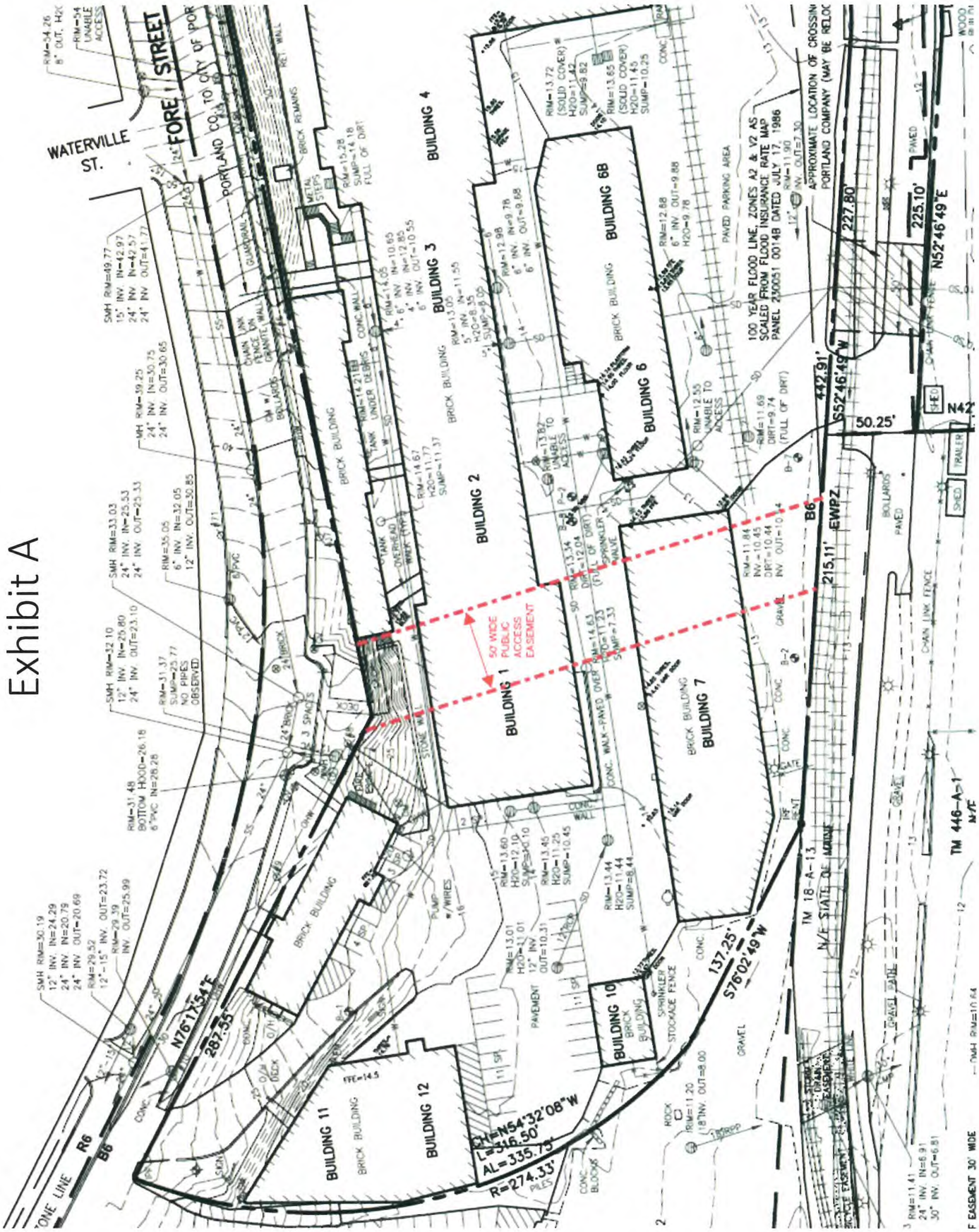

Received
Recorded Register of Deeds
Apr 05,2019 03:47:04P
Cumberland County
Nancy A. Lane

7. EVIDENCE OF STATE AND/OR FEDERAL APPROVALS

The following state and federal permits will be required for the proposed work:

- MaineDEP Site Location of Development Act Permit (reviewed by City of Portland under Delegated Review Authority);
- Maine Construction General Permit Notice of Intent; and
- FAA Notice of Proposed Construction.

Copies of these permit approvals can be provided to the City of Portland.

It should be noted that additional permits will also be required for the stormwater outfalls associated with the proposed development. The outfalls will be permitted separately, as described in the Level II Site Plan Amendment submitted to the City of Portland under separate cover for this work.

8. EVIDENCE OF FINANCIAL & TECHNICAL CAPABILITY

8.1 Financial Capability

Attached is a copy of a letter verifying the Applicant's financial capacity to undertake the project.

8.2 Technical Capability

On behalf of the Applicant, Woodard & Curran is preparing this application for the proposed development. Woodard & Curran has extensive experience with design for site development projects and specifically on the peninsula within the City of Portland. Woodard & Curran, a 1,000-person Portland-based firm, has provided engineering services to the public and private sector for over 40 years, including permitting, civil/site engineering, stormwater and construction management services. The project is also supported by a design team including Perkins+Will and Bruner/Cott for architecture and Michael Boucher Landscape Architecture (MBLA) for landscape architecture.

Perkins+Will architects is a firm consisting of twenty-four domestic and international offices with a depth of technical and management skill employed to execute projects of great complexity. Perkins+Will maintains a full-time QA/QC leader in each office to provide ongoing quality assurance for projects. These experts are guided by a national project delivery system that has resulted from the best practices from around the firm.

Bruner/Cott is a 35-person historic preservation architecture firm located in Boston, Massachusetts. Their leadership team brings a broad, integrated perspective to design, giving depth to each of their practice areas. Bruner/Cott's work has been recognized for award-winning design from preservation to adaptive reuse and new construction, with a focus on educational and cultural institutions. Bruner/Cott partners with private developers for residential and commercial buildings. Bruner/Cott is known for creativity in inventing new solutions to complex programs and as design leaders for historic renewal and contemporary design in the context of urban revitalization and institutional re-invention.

MBLA is a professional design firm located in Freeport, Maine. MBLA practices nationally and internationally, and over the past twenty-five years, the office has collaborated on diverse and notable projects, located in a wide range of settings and climates and across the state of Maine. MBLA projects range in scale and complexity including plazas, courtyards, university building projects, private school facilities, master plans, museums, churches, resorts, parks, and residential landscape projects. Many of MBLA's design projects have focused on creating places for people to gather while addressing issues of circulation, security, and programming.

Copies of resumes can be provided upon request.

8.3 Attachments

- Financial Capacity Letter

ACKMAN | ZIFF

REAL ESTATE CAPITAL ADVISORS

October 2, 2019

Ms. Christine Grimando,
AICP Planning Director
Planning & Urban Development
Department 389 Congress Street 4th
Floor
Portland, ME 04101

Re: 58 Fore Street Phase I Development - Financial Capacity to Serve

Dear Ms. Grimando,

It's my pleasure to provide this memorandum confirming Ackman-Ziff's ("AZ") relationship with Portland Foreside Development Company (PFDC) and its managing partners Casey Prentice and Kevin Costello. We believe that the management team possess the relevant knowledge and experience to design, coordinate and construct a multi-phased development plan – Phase 1 being Block 1A, building 12, Block 2 and Block 4 as described by the approved Master Development Plan. The managing partners have proven their development expertise with numerous successful Portland projects.

The management team possesses relationships with capital partners, banks, and financial institutions demonstrating the financial capacity necessary to obtain project financing for Phase 1. In our role as financial intermediary for the project, AZ will work with PFDC to arrange the appropriate capitalization for each phase of the development.

Ackman-Ziff Real Estate Group is the industry's preeminent boutique real estate capital advisory firm. In business for over 90 years, the privately held company offers a wide variety of cutting-edge commercial real estate capital markets solutions, including debt and mezzanine financing, preferred and joint venture equity, sponsor equity, and investment sales.

AZ looks forward to working with PFDC on the financing aspects of the project as it moves forward from the Master Development Plan submission to phased vertical developments.

AZ's unique knowledge, broad capital markets relationships and national platform enable the firm to be in the position to arrange financing for a wide range of commercial real estate projects and we're proud of our history of performance spanning more than 90 years.

Thank you and best regards,

Jason Krane
Principal

9. CONSISTENCY WITH PORTLAND DESIGN STANDARDS

Section 14-526 of the City of Portland's Land Use Code outlines the site plan standards that must be met by Level III Site Plan projects. The proposed development will follow the City's design standards as described in the following section.

9.1 Transportation

A Traffic Movement Permit (TMP #2016-224) was issued by the City of Portland on May 26, 2017, as part of the 58 Fore Street Master Development Plan review process. The TMP conditions of approval require that updated traffic analyses and a Transportation Demand Management (TDM) Plan be approved for each phase of development. A Traffic Assessment and TDM Plan have been prepared by Gorrill Palmer for the proposed development. These reports are provided as an attachment to this Section.

1. *Impact on Surrounding Street Systems*
   The attached Traffic Assessment was prepared by Gorrill Palmer for the proposed development. A trip generation summary is provided in the traffic assessment, as well as a comparison to trip generation previously approved as part of the 58 Fore Street Master Development Plan process.

2. *Access and Circulation*
   The primary vehicular and pedestrian entrances to the site are via the Thames Street Extension and Fore Street. Pedestrians will also be able to access the site from the Eastern Promenade trail.

   Vehicles entering on Thames Street may park in on-street parking within the site or may drive through the site to park in garage spaces located in Buildings 1A or 4. Additional vehicular access to the Building 4 garage is provided via a garage entrance on Fore Street, directly opposite Waterville Street.

   On Fore Street, two existing vehicular drop-off spaces will be relocated to the west of their current location to allow space for the construction of a plaza adjacent to the sidewalk with access to a stair providing a direct connection into the site. This pedestrian access way is located within a 50-foot Public Access Easement.

   The design of the proposed roadway internal to the Site is curb-less and will safely accommodate a mix of pedestrian and vehicle traffic. Continuous paving unifies the driving lane and sidewalk zones, while the paving design defines various zones for vehicles, pedestrians and parking through a mix of materials and paving patterns. Though the material will be continuous, a textured band of paving will differentiate the zones providing visual and tactile clues to the change in use. Bollards are used primarily between street parking and pedestrian walkways. Driving lanes are defined by a continuous, centerline trench drains and the edges are marked by a combination of parking spaces, plants, street trees, bollards, and light poles.

3. *Loading & Servicing*
   Loading and trash removal will be addressed in each of the buildings throughout the site with designated spaces to accommodate deliveries and storage.

4. *Sidewalks*
   Brick sidewalks and granite curb will be provided per the City of Portland Sidewalks and Driveway Apron Materials Policy on the public section of the Fore Connector and on Fore Street where proposed buildings will impact the street. There are three locations where sidewalk replacement is not currently proposed:

- Along the portion of the Fore Connector that is located on abutting private property.
- Along Fore Street at Parcel 1B. Future development on this parcel will replace this sidewalk
- Along Fore Street at Parcel 4 where current work will not impact existing sidewalk. Future development over the garage will replace this sidewalk.

5. *Public Transit Access*
   No changes to public transit access are proposed as part of this project.

6. *Parking*
   The attached Traffic Assessment provides a detailed parking analysis for the proposed development. The parking demand will be satisfied by parking spaces proposed on the garage level of Building 1A, as well as the Block 4 parking garage and additional surface parking areas that will be located throughout the site, as shown on the design drawings attached to Section 3. It has also been determined that 33 bicycle parking spaces will be required for the proposed development; this need will be met by bike racks provided in the Building 1A garage and throughout the Site.

7. *Snow Storage*
   The Site's snow removal will be managed by a contracted third party to ensure safe vehicular and pedestrian circulation, and to maintain access to the building entrances.

8. *Transportation Demand Management (TDM)*
   The attached TDM Plan was prepared by Gorrill Palmer for the proposed development.

9.2 Environmental & Landscape Features

1. *Preservation of Significant Natural Features*
   The Site has been previously developed and there are no known areas of significant natural features, including unusual natural areas, rare or endangered botanical features, areas of significant wildlife habitats, or wetland areas. The attached Official Species List identifies the northern long-eared bat, which has been listed as a Federally Threatened Species, in association with the project area (a common designation across the state); however, there are no critical habitat areas located within the project area. Based on US Fish & Wildlife information, the northern long-eared bat typically lives in caves during the winter months, and in trees larger than three inches in diameter during the summer, with migration between these two habitats in the spring in the fall. Tree-clearing for this project will be minimal; it is not anticipated that this project will have an impact on the northern long-eared bat species.

2. *Landscaping & Landscape Preservation*
   Much of the site will be raised in elevation to meet the grades established at the Thames Street/Fore Connector intersection and to align with the City of Portland Comprehensive Plan for a resilient waterfront. Meeting this goal requires the removal of the handful of birch trees that have established on the site; however, the planting design more than doubles the number of trees currently found on the developed areas of the site. The waterfront edge of the property will be re-vegetated with native seaside plantings including bearberry, sweet pepperbush, northern bayberry and staghorn sumac. These plantings are similar to those found along the Eastern Promenade Trail.

   The planting along the length of the west side of Building 1A includes tulip poplar trees, gro-low sumac groundcover, and lawn. Two planting areas flank the Fore Street Stairs and will contain a mix of woodland plants including a small tree, native shrubs, and groundcover plants. On the north side of the site entrance, the block is bracketed with trees planted in eight-foot wide groundcover beds. Street parking

on the waterfront side is bookended with similar plantings. Along with the four single street trees, two groups of three red maples set the character of the street. This pattern will continue in future phases.

In the historic zone of the Site, plantings will be limited to fully expose building facades and maintain the original industrial character of the site. The plantings in this area will be strategically arranged to provide visual interest and shade, where necessary. The primary group of trees will be a stand of red oaks at the nexus of the historic buildings and the first three development blocks. This grouping adds definition to the various plaza spaces around it, while directing pedestrian movement between the buildings and across the vehicular lanes. It also provides canopy for shade and space for outdoor seating.

3. *Site Landscaping & Street Trees*
   Landscaping Plans are included in the drawings referenced in Section 3 of this Report.

9.3 Environmental & Stormwater

1. *Water Quality, Stormwater Management & Erosion Control*
   The project must comply with the water quality, stormwater management, and erosion control standards identified by the City of Portland in the Land Use Chapter of the Code of Ordinances, as well as the MaineDEP Chapter 500 Stormwater Standards associated with Site Location of Development Act Permit requirements. The Stormwater Management Plan included with this application demonstrates that the proposed development meets the applicable standards.

   The project has been designed to minimize the impact of stormwater leaving the site. The project will not result in the flooding of adjacent lots or City property. Additionally, the project is not located within the watershed of an Urban Impaired Stream and is not anticipated to pose a risk of groundwater contamination during or after construction. Erosion and sediment control measures are described in the attached Stormwater Management Plan and detailed on the drawings. The development has also been designed to provide for the adequate and sanitary disposal of sewage, as further described in Section 14 of this Report.

9.4 Public Infrastructure & Safety

1. *Consistency with City Master Plan*
   The development's consistency with City Master Plan is described in Section 11 of this Report.

2. *Public Safety and Fire Prevention*
   Provisions for public safety have been incorporated into the design of site visibility, access, and territorial reinforcement. Adequate emergency vehicle access is provided via the proposed roadway. Compliance with the Portland Fire Department Site Review Checklist is described in Section 15 of this Report.

3. *Availability and Adequate Capacity of Public Utilities*
   The availability and adequate capacity of public utilities is described in Section 14 of this Report.

9.5 Site Design

1. *Massing, ventilation, and wind impact*
   Buildings have been designed within a context of similarly scaled new and existing buildings. All primary mechanical equipment is housed either within buildings, or within a fully screened extent of roof located to minimize disruption to abutting properties. HVAC venting is directed away from adjacent public areas. The renovation of existing buildings will include small additions to house mechanical rooms and egress

stairs; this work will not impact the surrounding structures and open spaces in regards to scale and environmental comforts.

2. *Shadows*
   Buildings have been designed to minimize impacts of shadows on open space and public areas that would affect the viability of the public use and existing vegetation. Over the course of the day, direct sunlight will be provided to adjacent areas to promote the use and growth of vegetation.

3. *Snow and ice loading*
   Buildings have been designed to prevent snow and ice from accumulating and falling onto abutting properties and public ways.

4. *View corridors*
   Buildings have been designed accommodate views corridors identified in the City's regulatory requirements.

5. *Historic Resources*
   A portion of the proposed development is located within the Portland Company Historic District. The design of this work takes into consideration the review that was undertaken during the Master Development Plan process. Historic artifacts and site furnishings will be employed in purposeful ways, located strategically in the context of the historic buildings.

   To date, Building 12 has received its Certificate of Appropriateness, and additional information required as a condition of approval will be provided to the Historic Preservation Board. The buildings located in the site's historic core are currently in the review process with the Historic Preservation Board, with workshops scheduled in November. We will continue to work with Staff and the Board to schedule review of the Building 1A and Building 4 façades that are located within the Historic District.

6. *Exterior Lighting*
   Proposed exterior lighting is shown on the drawings. A lighting schedule, cut sheets, and photometric plan are attached. We are requesting a waiver from the light trespass standard at the site entrances, as described in Section 4. Maximum illumination levels will be exceeded at the property line at the site entrances to adjacent roadways and sidewalks, where pedestrians and/or vehicular traffic will be entering the property and additional lighting will be warranted; this is not anticipated to impact abutting properties.

7. *Noise and Vibration*
   The noise impact from the proposed development will be minor. The primary source of noise from the proposed project will be the result of construction. Construction activities will be limited to the hours permitting by the City. HVAC and primary mechanical equipment will be located and screened to mitigate noise impacts. Noise associated with the proposed development will not exceed regulated levels and is not anticipated to negatively impact surrounding development in its urban setting. Noise and vibration associated with the proposed development will not exceed regulated levels.

8. *Signage and Wayfinding*
   Sign permit applications will be submitted under separate cover. The size, scale, proportions, design, materials, placement, quantity and source and intensity of illumination shall be designed to complement and enhance the architectural attributes of the proposed building.

Consideration has been put into wayfinding to minimize vehicular traffic. The primary site entrance associated with the 58 Fore Street address will be located off Fore Street, which will lead directly into the Block 4 parking garage. The attached Traffic Assessment provides a trip summary for each site entrance.

9. *Zoning Related Design Standards*
   An assessment of the City Zoning requirements is provided in Section 10 of this Report.

9.6 Attachments

- Official Species List
- Lighting Schedule, Cut Sheets & Photometric Plan
- Traffic Assessment & TDM Plan prepared by Gorrill Palmer (uploaded separately in Eplan)
- Stormwater Management Plan (uploaded separately in Eplan)

United States Department of the Interior

FISH AND WILDLIFE SERVICE
Maine Ecological Services Field Office
P. O. Box A
East Orland, ME 04431
Phone: (207) 469-7300 Fax: (207) 902-1588
http://www.fws.gov/mainefieldoffice/index.html

In Reply Refer To:
Consultation Code: 05E1ME00-2019-SLI-0754
Event Code: 05E1ME00-2019-E-01798
Project Name: Portland Foreside Development - Block 1

May 20, 2019

Subject: List of threatened and endangered species that may occur in your proposed project location, and/or may be affected by your proposed project

To Whom It May Concern:

The enclosed species list identifies the threatened, endangered, candidate, and proposed species and designated or proposed critical habitat that may occur within the boundary of your proposed project or may be affected by your proposed project. This species list fulfills the requirements of the U.S. Fish and Wildlife Service (Service) under section 7(c) of the Endangered Species Act (Act) of 1973, as amended (16 U.S.C. 1531 et seq.).

New information based on updated surveys, changes in the abundance and distribution of species, changed habitat conditions, or other factors could change this list. Please feel free to contact us if you need more current information or assistance regarding the potential impacts to federally proposed, listed, and candidate species and federally designated and proposed critical habitat. Please note that under 50 CFR 402.12(e) of the regulations implementing section 7 of the Act, the accuracy of this species list should be verified after 90 days. This verification can be completed formally or informally as desired. The Service recommends that verification be completed by visiting the ECOS-IPaC Web site at regular intervals during project planning and implementation for updates to species lists and information. An updated list may be requested through the ECOS-IPaC system by completing the same process used to receive the enclosed list.

The purpose of the Act is to provide a means whereby threatened and endangered species and the ecosystems upon which they depend may be conserved. Under sections 7(a)(1) and 7(a)(2) of the Act and its implementing regulations (50 CFR 402 et seq.), Federal agencies are required to utilize their authorities to carry out programs for the conservation of threatened and endangered species and to determine whether projects may affect threatened and endangered species and/or designated critical habitat.

A Biological Assessment is required for construction projects (or other undertakings having similar physical impacts) that are major Federal actions significantly affecting the quality of the human environment as defined in the National Environmental Policy Act (42 U.S.C. 4332(2)(c)). For projects other than major construction activities, the Service suggests that a biological evaluation similar to a Biological Assessment be prepared to determine whether the project may affect listed or proposed species and designated or proposed critical habitat. Recommended contents of a Biological Assessment are described at 50 CFR 402.12.

If a Federal agency determines, based on the Biological Assessment or biological evaluation, that listed species or designated critical habitat may be affected by the proposed project, the agency is required to consult with the Service pursuant to 50 CFR 402. In addition, the Service recommends that candidate species, proposed species and proposed critical habitat be addressed within the consultation. More information on the regulations and procedures for section 7 consultation, including the role of permit or license applicants, can be found in the Endangered Species Consultation Handbook at: http://www.fws.gov/endangered/esa-library/pdf/TOC-GLOS.PDF

This species list also identifies candidate species under review for listing and those species that the Service considers species of concern. Candidate species have no protection under the Act but are included for consideration because they could be listed prior to completion of your project. Species of concern are those taxa whose conservation status is of concern to the Service (i.e., species previously known as Category 2 candidates), but for which further information is needed.

If a proposed project may affect only candidate species or species of concern, you are not required to prepare a Biological Assessment or biological evaluation or to consult with the Service. However, the Service recommends minimizing effects to these species to prevent future conflicts. Therefore, if early evaluation indicates that a project will affect a candidate species or species of concern, you may wish to request technical assistance from this office to identify appropriate minimization measures.

Please be aware that bald and golden eagles are not protected under the Endangered Species Act but are protected under the Bald and Golden Eagle Protection Act (16 U.S.C. 668 et seq.). Projects affecting these species may require development of an eagle conservation plan: http://www.fws.gov/windenergy/eagle_guidance.html Information on the location of bald eagle nests in Maine can be found on the Maine Field Office Web site: http://www.fws.gov/mainefieldoffice/Project%20review4.html

Additionally, wind energy projects should follow the wind energy guidelines: http://www.fws.gov/windenergy/ for minimizing impacts to migratory birds and bats. Projects may require development of an avian and bat protection plan.

Migratory birds are also a Service trust resource. Under the Migratory Bird Treaty Act, construction activities in grassland, wetland, stream, woodland, and other habitats that would result in the take of migratory birds, eggs, young, or active nests should be avoided. Guidance for minimizing impacts to migratory birds for projects including communications towers (e.g.,

cellular, digital television, radio, and emergency broadcast) can be found at: http://www.fws.gov/migratorybirds/CurrentBirdIssues/Hazards/towers/towers.htm and at: http://www.towerkill.com; and at: http://www.fws.gov/migratorybirds/CurrentBirdIssues/Hazards/towers/comtow.html

We appreciate your concern for threatened and endangered species. The Service encourages Federal agencies to include conservation of threatened and endangered species into their project planning to further the purposes of the Act. Please include the Consultation Tracking Number in the header of this letter with any request for consultation or correspondence about your project that you submit to our office.

Attachment(s):

- Official Species List

Official Species List

This list is provided pursuant to Section 7 of the Endangered Species Act, and fulfills the requirement for Federal agencies to "request of the Secretary of the Interior information whether any species which is listed or proposed to be listed may be present in the area of a proposed action".

This species list is provided by:

Maine Ecological Services Field Office
P. O. Box A
East Orland, ME 04431
(207) 469-7300

Project Summary

Consultation Code: 05E1ME00-2019-SLI-0754

Event Code: 05E1ME00-2019-E-01798

Project Name: Portland Foreside Development - Block 1

Project Type: DEVELOPMENT

Project Description: Portland, ME

Project Location:

Approximate location of the project can be viewed in Google Maps: https://www.google.com/maps/place/43.661965382144984N70.24489577901488W



Counties: Cumberland, ME

Endangered Species Act Species

There is a total of 1 threatened, endangered, or candidate species on this species list.

Species on this list should be considered in an effects analysis for your project and could include species that exist in another geographic area. For example, certain fish may appear on the species list because a project could affect downstream species.

IPaC does not display listed species or critical habitats under the sole jurisdiction of NOAA Fisheries[1], as USFWS does not have the authority to speak on behalf of NOAA and the Department of Commerce.

See the "Critical habitats" section below for those critical habitats that lie wholly or partially within your project area under this office's jurisdiction. Please contact the designated FWS office if you have questions.

---

1. NOAA Fisheries, also known as the National Marine Fisheries Service (NMFS), is an office of the National Oceanic and Atmospheric Administration within the Department of Commerce.

Mammals

NAME	STATUS
Northern Long-eared Bat *Myotis septentrionalis* No critical habitat has been designated for this species. Species profile: https://ecos.fws.gov/ecp/species/9045	Threatened

Critical habitats

THERE ARE NO CRITICAL HABITATS WITHIN YOUR PROJECT AREA UNDER THIS OFFICE'S JURISDICTION.

Lam Partners
ARCHITECTURAL LIGHTING DESIGN
84 SHERMAN ST, CAMBRIDGE, MA 02140
617.354.4502 LAMPARTNERS.COM

LIGHTING FIXTURE SCHEDULE

Level 3 Site Application

Portland Foreside Project

Not for bidding or construction unless fully incorporated into contract documents by Architect and/or Engineer.

Date Issued: 11/4/2019

Posting Date: 11/4/2019

Lam Project # 18145

Written by: MC/LW

Checked by: LW

Fixture Type		Description	Fixture (Manufacturers and Models)	Light Source	Fixt. Load (W) (Typical)	Controls	Location / Use	Notes
G	---	Ground surface or recessed mounting	Suffixes, like -4', -6', -8', etc. are typically used to denote a variant of a fixture type. Please note that the nomenclature is not absolute. Refer to the individual specifications for each fixture type.					Mounting heights, special notes, references to other documents, instructions to the Contractor, etc. are typically listed in the Notes column.
L	---	Linear fixture of any type						
M	---	Media or Mesh						
DP	---	Decorative Pendant						
P	---	Pendant (usually a discreet unit)						
R	---	Recessed						
S	---	Surface mounted (typically to ceiling)						
T	---	Track or track mounted						
W	---	Wall mounted						
Y		Exterior + Mount, (i.e. YG would be exterior ground mount)						
R1	Created 10/8/2019	Ceiling recessed LED downlight with 50 degree beam, frosted lens, trim flange, and integral driver	USAI Lighting BeveLED2.2 Basic Downlight	Integral LED 3000K 1000 lm delivered 50,000 hrs 80+ CRI	20 W	0-10V to 10% Integral Dimmable Driver	Canopy of Building 6 entry	Contractor to coordinate quantities, mounting locations, and mounting details with Landscape Arch. dwgs. EE to confirm dimming compatibility with specified lighting control system.
S1	Created 11/1/2019	Ceiling surface mounted linear LED downlight within Architectural wallslot detail	Lumenwerx Via 2 Symmetric	Integral LED 3000K 500 lm/LF delivered 50,000 hrs 80+ CRI	8 W/LF	0-10V to 5% Integral Dimmable Driver	Block 4 Interior Wall Slots	Contractor to coordinate quantities, mounting locations, and mounting details with Landscape Arch. dwgs. EE to confirm dimming compatibility with specified lighting control system.
S2	Created 11/1/2019	Surface mounted curvlinear LED grazer with extruded aluminum housing, frosted lens, and remote driver mounted along underside of stair	LEDLinear	Integral LED 3000K 500 lm/LF delivered 50,000 hrs 80+ CRI	3 W/LF	0-10V to 5% Integral Dimmable Driver	Block 4 Interior Stair	Contractor to coordinate quantities, mounting locations, and mounting details with Landscape Arch. dwgs. EE to confirm dimming compatibility with specified lighting control system.
YG1	Updated 7/9/2019	Exterior rated pole mounted Type II beam distribution downlight	Bega Head: 77930-3000K-(Finish)	Integral LED 3000K 3385 lm delivered 50,000 hrs 80+ CRI	24 W	0-10V to 10% Integral Dimmable Driver	Vehicular Pathways	To be used with Type YG7 pole. Contractor to coordinate quantities, mounting locations, and mounting details with Landscape Arch. dwgs. EE to confirm dimming compatibility with specified lighting control system.

Lam Partners
ARCHITECTURAL LIGHTING DESIGN
84 SHERMAN ST, CAMBRIDGE, MA 02140
617.354.4502 LAMPARTNERS.COM

LIGHTING FIXTURE SCHEDULE

Level 3 Site Application

Portland Foreside Project

Not for bidding or construction unless fully incorporated into contract documents by Architect and/or Engineer.

Date Issued: 11/4/2019

Posting Date: 11/4/2019

Lam Project # 18145

Written by: MC/LW

Checked by: LW

Fixture Type		Description	Fixture (Manufacturers and Models)	Light Source	Fixt. Load (W) (Typical)	Controls	Location / Use	Notes
YG2	Updated 7/9/2019	Exterior rated 41" height illuminated bollard with 360 degree light distribution and integral driver	Forms+Surfaces Helio Bollard 41" height Helio Bollard-3000K-MOD Painted "Galvanized Steel" finish Erco Castor Alternate 33943.023-3000K-(Finish)	Integral LED 3000K 700 lm delivered 50,000 hrs 80+ CRI	30 W	0-10V to 10% Integral Dimmable Driver	South Entrance	Contractor to coordinate quantities, mounting locations, and mounting details with Landscape Arch. dwgs. EE to confirm dimming compatibility with specified lighting control system.
YG3	Updated 11/1/2019	Wet listed in-grade adjustable uplight with integral driver and flush trim flange	Erco Tesis wide beam distribution 35069.023-(3000K)-(Finish)	Integral LED 3000K 824 lm delivered 50,000 hrs 80+ CRI	14 W	0-10V to 10% Integral Dimmable Driver	Block 2 Tree Grove	Contractor to coordinate quantities, mounting locations, and mounting details with Landscape Arch. dwgs. EE to confirm dimming compatibility with specified lighting control system.
YG3A	Created 11/1/2019	Wet listed in-grade adjustable uplight with integral driver and flush trim flange	Erco Tesis spot distribution 35077.023-(3000K)-(Finish)	Integral LED 3000K 600 lm delivered 50,000 hrs 80+ CRI	8 W	0-10V to 10% Integral Dimmable Driver	Block 2 Boiler&Water Tanks	Contractor to coordinate quantities, mounting locations, and mounting details with Landscape Arch. dwgs. EE to confirm dimming compatibility with specified lighting control system.
YG4	Updated 6/18/2019	*Not Used (Inground Uplight)*						
YG5	Updated 6/18/2019	*Not Used (Inground Wallwasher)*						
YG6	Updated 7/9/2019	Exterior and security rated non-illuminated bollard	Forms+Surfaces Helio Bollard 41" height Helio Bollard-MOD Security-MOD Painted "Galvanized Steel" finish TBD	N/A	N/A	N/A	Pedestrian Pathways	Contractor to coordinate quantities, mounting locations, and mounting details with Landscape Arch. dwgs. EE to confirm dimming compatibility with specified lighting control system.
YG7	Updated 11/1/2019	Ground mounted 20' height wood pole	Structura BOL round straight solid wood pole BOL-STRAIGHT POLE-20FT-5.5"-5.5"-(Wood Finish	N/A	N/A	N/A	Vehicular and Waterfront Poles	To be used with Type YG1 pole mounted head. Contractor to coordinate quantities, mounting locations, and mounting details with Landscape Arch. dwgs.
YG8	Created 7/25/2019	Exterior rated ground mounted 20' height pole with mounting plate	Valmont Round Non-Tapered Aluminum Pole-20' Height-(Finish)	N/A	N/A	N/A	West of Buliding 12	To be used with Type YG9 & YG10 pole mounted heads Contractor to coordinate quantities, mounting locations, and mounting details with Landscape Arch. dwgs.

Lam Partners
ARCHITECTURAL LIGHTING DESIGN
84 SHERMAN ST, CAMBRIDGE, MA 02140
617.354.4502 LAMPARTNERS.COM

LIGHTING FIXTURE SCHEDULE

Level 3 Site Application

Portland Foreside Project

Not for bidding or construction unless fully incorporated into contract documents by Architect and/or Engineer.

Date Issued: 11/4/2019

Posting Date: 11/4/2019

Lam Project # 18145

Written by: MC/LW

Checked by: LW

Fixture Type		Description	Fixture (Manufacturers and Models)	Light Source	Fixt. Load (W) (Typical)	Controls	Location / Use	Notes
YG9	Created 7/25/2019	Pole mounted adjustable accent with oval flood distribution, integral driver, adjustable & lockable yoke, corrosion resistant coating, tenon mounting, and snoot & cross baffle assembly to minimize glare and direct view into fixture	Lumenpulse Lumenbeam Medium LBM-277-30K-NS-LSLH-(Finish)-DIM-CRC-UL-(Cable Length) Tenon Mounting: PM4-1 Wide Snoot: LBMSNW-(Finish)-BK-MOD CROSS BAFFLE	Integral LED 3000K 1,552 lm 120,000 hrs 80+ CRI	28 W	1-10V to 10% Integral Dimmable driver	Buliding 12 Signage Lighting	Contractor to coordinate quantities, mounting locations, and mounting details with Landscape Arch. dwgs. EE to confirm dimming compatibility with specified lighting control system.
YG10	Created 7/25/2019	Pole mounted adjustable downlight with wide flood distribution, integral driver, adjustable & lockable yoke, corrosion resistant coating, tenon mounting, and snoot & cross baffle assembly to minimize glare and direct view into fixture	Lumenpulse Lumenbeam Medium LBM-277-30K-WFL-(Finish)-CRC-DIM-UL-(Cable Length) Tenon Mounting: PM4-1 Wide Snoot: LBMSNW-(Finish)-BK-MOD CROSS BAFFLE	Integral LED 3000K 1,370 lm 120,000 hrs 80+ CRI	28 W	1-10V to 10% Integral Dimmable driver	Small courtyard and pedestrian crossing over rail tracks	Contractor to coordinate quantities, mounting locations, and mounting details with Landscape Arch. dwgs. EE to confirm dimming compatibility with specified lighting control system.
YG11		14' height pole with 31-1/2" diameter white reflective disk with indirect light, integral driver	Bega 77 208-3000K-(Finish)	Integral LED 3000K 1,742 lm 120,000 hrs 80+ CRI	38 W	1-10V to 10% Integral Dimmable driver	Circulation between Buildings 3 & 6	Contractor to coordinate quantities, mounting locations, and mounting details with Landscape Arch. dwgs. EE to confirm dimming compatibility with specified lighting control system.
YG12	Created 10/8/2019	Surface mounted 4' linear LED uplight with snap-on radial louvers, integral driver, and Corrosion-resistant coating for hostile environments	Lumenpulse Lumen facade - exterior Fixture: LOG ASHRAE-277 (Voltage TBC)-48-3000K-10x10-SAM-(Finish)-DIM-ETE-CRC Radial Louver: LOGRD-48-BK (Finish TBC)-CRC	Integral LED 3000K TBD lm 120,000 hrs 80+ CRI	TBD	1-10V to 10% Integral Dimmable driver	Fore Street Stair stone uplight	Contractor to coordinate quantities, mounting locations, and mounting details with Landscape Arch. dwgs. EE to confirm dimming compatibility with specified lighting control system.
YP1	Created 10/8/2019	Pendant mounted disc shaped downlight (18" diameter)	Santa and Cole Arne S Domus catenary cable: Tivoli TBD	Integral LED 3000K TBD lm 120,000 hrs 80+ CRI	TBD	1-10V to 10% Integral Dimmable driver	Back Alley in front of Beer Hall	Contractor to coordinate quantities, mounting locations, and mounting details with Landscape Arch. dwgs. EE to confirm dimming compatibility with specified lighting control system.
YR1	Updated 7/9/2019	Exterior rated soffit recessed 8' linear LED downlight with integral drivers and microcell louvers to minimize glare	Lumenpulse Squero SQUR-MRO55-B-LED-80-500-30-UNV-4FT-D1-1-(Mounting)-(Finish)	Integral LED 3000K 500lm/LF delivered 50,000 hrs 80+ CRI	6 W/LF	0-10V to 10% Integral Dimmable driver	Block 1A Building and Parking Entries	Contractor to coordinate quantities, mounting locations, and mounting details with Landscape Arch. dwgs. EE to confirm dimming compatibility with specified lighting control system.

Lam Partners
ARCHITECTURAL LIGHTING DESIGN
84 SHERMAN ST, CAMBRIDGE, MA 02140
617.354.4502 LAMPARTNERS.COM

LIGHTING FIXTURE SCHEDULE

Level 3 Site Application

Portland Foreside Project

Not for bidding or construction unless fully incorporated into contract documents by Architect and/or Engineer.

Date Issued: 11/4/2019

Posting Date: 11/4/2019

Lam Project # 18145

Written by: MC/LW

Checked by: LW

Fixture Type		Description	Fixture (Manufacturers and Models)	Light Source	Fixt. Load (W) (Typical)	Controls	Location / Use	Notes
YS1-4'	Updated 7/9/2019	Exterior rated surface mounted 4' length linear LED uplight with integral driver and corosion-resistant coating for hostile environments	Lumenpulse Lumen facade - exterior Fixture: LOG ASHRAE-277 (Voltage TBC)-48-3000K-30x30-SAM-(Finish)-DIM-ETE-CRC Radial Louver: LOGRD-48-BK (Finish TBC)-CRC	Integral LED 3000K 3000 lm 50,000 hrs 80+ CRI	5 W/LF	0-10V to 10% Integral Dimmable driver	Canopy uplight	Contractor to coordinate quantities, mounting locations, and mounting details with Landscape Arch. dwgs. EE to confirm dimming compatibility with specified lighting control system.
YS1-1'	Updated 7/9/2019	Exterior rated surface mounted 1' length linear LED uplight with integral driver and corosion-resistant coating for hostile environments	Lumenpulse Lumen facade - exterior Fixture: LOG ASHRAE-277 (Voltage TBC)-12-3000K-30x30-SAM-(Finish)-DIM-ETE-CRC Radial Louver: LOGRD-48-BK (Finish TBC)-CRC	Integral LED 3000K 3000 lm 50,000 hrs 80+ CRI	5 W/LF	0-10V to 10% Integral Dimmable driver	Canopy uplight	Contractor to coordinate quantities, mounting locations, and mounting details with Landscape Arch. dwgs. EE to confirm dimming compatibility with specified lighting control system.
YS2		*Not Used* *(Roof Screen wallwasher)*						
YS3	Updated 7/9/2019	Pole mounted adjustable downlight, integral driver, adjustable & lockable yoke, corrosion resistant coating, tenon mounting, and snoot & cross baffle assembly to minimize glare and direct view into fixture	Lumenpulse Lumenbeam Large LBL-277-30K-NF-LSLV-(Finish)-DIM-CRC-(Cable Length)-YK TN4 Tenon Adapter Wide Snoot: LBLSNW-(Finish)-BK-MOD CROSS BAFFLE AND 9" DEEP SNOOT	Integral LED 3000K 1500 lm 50,000 hrs 80+ CRI	100 W	0-10V to 10% Integral Dimmable driver	Moonlighting at plaza East of Building 1A	To be coordinate with Type YS4 pole Contractor to coordinate quantities, mounting locations, and mounting details with Landscape Arch. dwgs. EE to confirm dimming compatibility with specified lighting control system.
YS4	Created 7/9/2019	Exterior rated roof mounted 10' height pole with mounting plate	Valmont Round Non-Tapered Aluminum Pole-10' Height-(Finish)	N/A	N/A	N/A	Moonlighting for plaza East of Building 1A	To be coordinate with Type YS3 adjustable downlight Contractor to coordinate quantities, mounting locations, and mounting details with Landscape Arch. dwgs.

Lam Partners
ARCHITECTURAL LIGHTING DESIGN
84 SHERMAN ST, CAMBRIDGE, MA 02140
617.354.4502 LAMPARTNERS.COM

LIGHTING FIXTURE SCHEDULE
Level 3 Site Application
Portland Foreside Project

Not for bidding or construction unless fully incorporated into contract documents by Architect and/or Engineer.

Date Issued: 11/4/2019
Posting Date: 11/4/2019

Lam Project # 18145
Written by: MC/LW
Checked by: LW

Fixture Type		Description	Fixture (Manufacturers and Models)	Light Source	Fixt. Load (W) (Typical)	Controls	Location / Use	Notes
YS5	Created 7/9/2019	Exterior rated linear LED striplight with extruded aluminum channel, frosted lens, and remote driver	Acolyte Ribbonlyte Fixture: RB-90-SWS265-2.230-(Finish) Extrusion: AS1 Surface with horizontal mounting clips Frosted Lens Remote Dimmable Driver: 0-10V Dimmable 96W Driver	Integral LED 3000K 100 lm/LF 50,000 hrs 80+ CRI	2.2 W/LF	0-10V to 10% Integral Dimmable driver	Block 1 Vertical Indirect Coves along North Entries	Mounting detail to be coordinated with Architects Contractor to coordinate quantities, mounting locations, and mounting details with Landscape Arch. dwgs. Contractor to locate remote dimmable drivers at dry, accessible, and well ventilated locations. Contractor to provide all mounting clips and accessories for a complete operational system.
YS6	Created 7/25/2019	Illuminated Handrail with regressed LED modules, matte frosted lens, symmetric beam distribution, and remote driver	Wagner Lumenlinear or Lumenpod Lumenlinear TBD-LULS-30K-20-120-MS-(Length)-(Finish)	Integral LED 3000K 150 lm/LF 50,000 hrs 80+ CRI	1.85 W/LF	0-10V to 10% Remote Dimmable driver	Stair	Mounting detail to be coordinated with Architects Contractor to coordinate quantities, mounting locations, and mounting details with Landscape Arch. dwgs. Contractor to locate remote dimmable drivers at dry, accessible, and well ventilated locations. Contractor to provide all mounting accessories for a complete operational system.
YS7	Created 10/11/2019	Small scale catenary string lights with frosted globe diffusers and remote driver	Tegan Exton System Configuration TBC with Landscape Architects	Integral LED 3000K TBD lm/LF 50,000 hrs 80+ CRI	TBD	0-10V to 10% Remote Dimmable driver	Back Alley	Contractor to coordinate quantities, mounting locations, and mounting details with Landscape Arch. dwgs. EE to confirm dimming compatibility with specified lighting control system.
YS8		*Not Used*						

Lam Partners
ARCHITECTURAL LIGHTING DESIGN
84 SHERMAN ST, CAMBRIDGE, MA 02140
617.354.4502 LAMPARTNERS.COM

LIGHTING FIXTURE SCHEDULE

Level 3 Site Application

Portland Foreside Project

Not for bidding or construction unless fully incorporated into contract documents by Architect and/or Engineer.

Date Issued: 11/4/2019

Posting Date: 11/4/2019

Lam Project # 18145

Written by: MC/LW

Checked by: LW

Fixture Type		Description	Fixture (Manufacturers and Models)	Light Source	Fixt. Load (W) (Typical)	Controls	Location / Use	Notes
YS9	Created 10/11/2019	Surface mounted linear LED striplight with remote dimmable driver	Linea Lighting	Integral LED 3000K TBD lm/LF 50,000 hrs 80+ CRI	TBD	0-10V to 10% Remote Dimmable driver	Open Bridges	Contractor to coordinate quantities, mounting locations, and mounting details with Landscape Arch. dwgs. EE to confirm dimming compatibility with specified lighting control system.
YS10	Created 10/8/2019	surface mounted linear uplight	Ledlinear Xoolum	Integral LED 3000K TBD lm/LF 50,000 hrs 80+ CRI	TBD	0-10V to 10% Remote Dimmable driver	Building 6 canopy sign lighting/building 4 uplight from trusses	Contractor to coordinate quantities, mounting locations, and mounting details with Landscape Arch. dwgs. EE to confirm dimming compatibility with specified lighting control system.
YS11	Created 10/11/2019	building mounted exterior rated adjustable downlights with linear spread lens	Lumenpulse lumenbeam small	Integral LED 3000K TBD lm 50,000 hrs 80+ CRI	TBD	0-10V to 10% Remote Dimmable driver	Building 4 exterior canopy-on arm lighting across space to light beam	Contractor to coordinate quantities, mounting locations, and mounting details with Landscape Arch. dwgs. EE to confirm dimming compatibility with specified lighting control system.
YS12	Created 10/11/2019	Structure mounted cylinder downlight with frosted lens	V2 Core 200 SX Surface	Integral LED 3000K TBD lm 50,000 hrs 80+ CRI	TBD	0-10V to 10% Remote Dimmable driver	building 12 south facade restaurant area	Contractor to coordinate quantities, mounting locations, and mounting details with Landscape Arch. dwgs. EE to confirm dimming compatibility with specified lighting control system.
YS13	Created 10/11/2019	Exterior rated surface mounted LED downlight with 50 degree beam	Lucifer Cylinder CY3	Integral LED 3000K TBD lm 50,000 hrs 80+ CRI	TBD	0-10V to 10% Remote Dimmable driver	Canopy of Building 4 entry	Contractor to coordinate quantities, mounting locations, and mounting details with Landscape Arch. dwgs. EE to confirm dimming compatibility with specified lighting control system.
YW1		*Not Used* *(Column Downlight)*						
YW2		*Not Used* *(Wall mounted direct/indirect)*						

Lam Partners
ARCHITECTURAL LIGHTING DESIGN
84 SHERMAN ST, CAMBRIDGE, MA 02140
617.354.4502 LAMPARTNERS.COM

LIGHTING FIXTURE SCHEDULE

Level 3 Site Application

Portland Foreside Project

Not for bidding or construction unless fully incorporated into contract documents by Architect and/or Engineer.

Date Issued: 11/4/2019

Posting Date: 11/4/2019

Lam Project # 18145

Written by: MC/LW

Checked by: LW

Fixture Type		Description	Fixture (Manufacturers and Models)	Light Source	Fixt. Load (W) (Typical)	Controls	Location / Use	Notes
YW3	Updated 7/9/2019	Exterior rated mullion mounted 4' linear LED downlight with forward throw optic and dual circuit switching	Visa Passage OW2480-L30K-L-3000K-MVOLT0-FT-(Finish)-DS	Integral LED 3000K 650 lm delivered 50,000 hrs 80+ CRI	14 W	0-10V to 10% Integral Dimmable driver	Block 1A entries	Final mounting elevations to be confirmed with Architects. Contractor to coordinate quantities, mounting locations, and mounting details with Landscape Arch. dwgs. EE to confirm dimming compatibility with specified lighting control system.
YW4		*Not Used* *(Building 12 Wall Mounted Signage Light)*						
YW5	Updated 7/9/2019	Exterior rated uplight with narrow spot distribution	Erco Kona XS 34832.023-3000K-(Finish)	Integral LED 3000K 520 lm delivered 50,000 hrs 80+ CRI	8 W	0-10V to 10% Integral Dimmable driver	East/South/West Facades	Final mounting elevations to be confirmed with Architects. Contractor to coordinate quantities, mounting locations, and mounting details with Landscape Arch. dwgs. EE to confirm dimming compatibility with specified lighting control system.
YW6	Created 7/25/2019	Facade mounted adjustable downlight, narrow flood distribution with linear spread lens, integral driver, adjustable & lockable yoke, corrosion resistant coating, and snoot & cross baffle assembly to minimize glare and direct view into fixture	Lumenpulse Lumenbeam Medium LBL-277-30K-NF-LSLH-(Finish)-DIM-CRC-UL-(Cable Length) Wide Snoot: LBLSNW-(Finish)-BK-MOD CROSS BAFFLE	Integral LED 3000K 1500 lm 50,000 hrs 80+ CRI	28 W	0-10V to 10% Integral Dimmable driver	Moonlighting at plaza East of Building 1A	Contractor to coordinate quantities, mounting locations, and mounting details with Landscape Arch. dwgs. EE to confirm dimming compatibility with specified lighting control system.
YW7		*Not Used*						
YW8	Created 10/8/2019	Facade mounted adjustable downlight, medium flood distribution with linear spread lens, integral driver, adjustable & lockable yoke, corrosion resistant coating, and snoot & cross baffle assembly to minimize glare and direct view into fixture	Lumenpulse Lumenbeam Medium LBL-277-30K-F-LSLH-(Finish)-DIM-CRC-UL-(Cable Length) Wide Snoot: LBLSNW-(Finish)-BK-MOD CROSS BAFFLE	Integral LED 3000K TBD lm 50,000 hrs 80+ CRI	28 W	0-10V to 10% Remote Dimmable driver	Back Alley	Contractor to coordinate quantities, mounting locations, and mounting details with Landscape Arch. dwgs. EE to confirm dimming compatibility with specified lighting control system.

General Notes:

1. Fixture input power is the actual fixture input wattage, not the light source wattage. The Engineer and Contractor are responsible for confirming these values as they are provided as a convenience only. Any "Alternates", "Equals" or "Equivalents" may have different loads. A minimum of 10% spare electrical lighting capacity is recommended to account for these variances.
2. The primary manufacturer and model number listed for each fixture type shall serve as the basis of design. Any "Alternates", "Equals" or "Equivalents" subsequently listed under each primary listing may be able to provide a suitable product that closely matches the primary listing. Unless provided with a specific catalog number, those "Alternates", "Equals" or "Equivalents" may be required to modify their standard products to match the primary listing as best possible. Suitability of "Alternates", "Equals" or "Equivalents" shall be determined solely by the Lighting Designer for any fixture types listed on this Lighting Fixture Schedule, unless otherwise noted.

Lam Partners
ARCHITECTURAL LIGHTING DESIGN
84 SHERMAN ST, CAMBRIDGE, MA 02140
617.354.4502 LAMPARTNERS.COM

LIGHTING FIXTURE SCHEDULE

Level 3 Site Application

Portland Foreside Project

Not for bidding or construction unless fully incorporated into contract documents by Architect and/or Engineer.

Date Issued: 11/4/2019

Posting Date: 11/4/2019

Lam Project # 18145

Written by: MC/LW

Checked by: LW

Fixture Type	Description	Fixture (Manufacturers and Models)	Light Source	Fixt. Load (W) (Typical)	Controls	Location / Use	Notes

This information is provided for the use of the Architect and their consultants in the production of their detailed drawings and specifications. Assurances of code compliance, conformity with environmental conditions and other building systems, voltage selection, design of wiring, supports, switching, emergency and exit lighting, engineering calculations or details, and preparation of cost and power consumption estimates are the responsibility of others. Information provided by Lam Partners Inc may require coordination and development by others to a level of detail suitable for incorporation into contract documents. Lam Partners Inc's documents are not intended or represented to be suitable for reuse on extensions of the Project or on any other project, nor are they to be relied upon by anyone other than the Architect and the Architect's consultants for the Project. Lam Partners Inc is not responsible for construction means, methods, sequences, techniques, safety programs, or procedures, or the failure of any contractor to comply with the requirements of the contract documents. There are no warranties of merchantability or fitness for a particular purpose or any other warranties or guarantees whatsoever, express or implied, with respect to any materials, documents, or designs provided by Lam Partners Inc.

18145 Portland Foreside Project

Level 3 Site Plan Application
11/08/2019



Lam Partners
ARCHITECTURAL LIGHTING DESIGN
84 SHERMAN ST, CAMBRIDGE, MA 02140
617.354.4502 LAMPARTNERS.COM

BeveLED® 2.2 Basic
4.5″ Round Downlight - B4RD-G1

R1
Lam Partners ARCHITECTURAL LIGHTING DESIGN
Lighting

Universal and Field Convertible - Trim | Trimless | Millwork

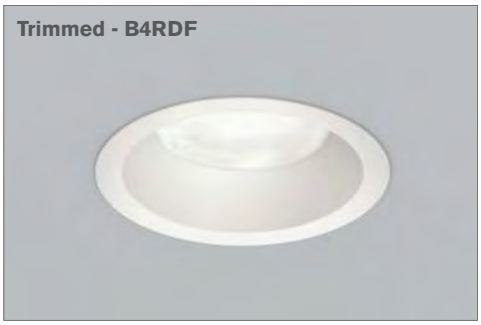





usailighting.com/beveledbasic

Meet the new and improved BeveLED Basic, upgraded with even more effiicient, perfectly consistent classic white LED light engines and our field convertible trims that allow for easy on-site changes from trimmed to trimless to millwork – all in a budget-conscious product with the same below ceiling appearance as our extremely versatile BeveLED 2.2 product line.

FEATURES

- Field Flexibility between trimmed, trimless and millwork
- Dry/damp/wet location rated for bathrooms and showers, including trimless and millwork
- 1% dimming standard + more dimming options
- Clear overspray protector for installation convenience

COMPANION FAMILY PRODUCTS



Adjustable - B4RA-G1
usailighting.com/B4RA-G1



Wall Wash - B4RW-G1
usailighting.com/B4RW-G1

DOWNLIGHT PERFORMANCE DATA

Classic White

DELIVERED* PERFORMANCE:	9W		12W		16W		24W	
Color Rendering Index:	80+	90+	80+	90+	80+	90+	80+	90+
Source Lumens:	900	725	1250	1050	1775	1450	2650	2175
Lumens Per Watt:	79	65	85	69	85	69	89	73
Delivered Lumens:	700	575	1025	825	1425	1175	2125	1750
EM Mode Output:	550 Delivered Lumens (nominal)							

*Based on 3000K. Performance varies for each specific beamspread and color temperature. See IES files for exact values at usailighting.com.

Classic White

CORRELATED COLOR TEMPERATURE MULTIPLIER	2700K		3000K		3500K		4000K	
Color Rendering Index:	80+	90+	80+	90+	80+	90+	80+	90+
Multiplier for Lumen Output:	0.94	0.82	1.00	0.82	1.00	.88	1.00	0.94

USAI LIGHTING COLLABORATORY
13 Crosby Street
New York, NY 10013
845-234-4090
showroom@usailighting.com

USAI LIGHTING HEADQUARTERS
1126 River Road
New Windsor, NY 12553
T: 845–565–8500
info@usailighting.com

© 2019. USAI, LLC. All rights reserved.
All designs protected by copyright. Covered by US Patents: 8,581,520, 8,456,109, 8,742,695, 9,671,091 and 7,832,889. Patents pending. USAI and BeveLED are registered trademarks of USAI, LLC.
Revised 10/02/2019

R1

Lam Partners ARCHITECTURAL LIGHTING DESIGN

Lighting

BeveLED® 2.2 Basic
4.5" Round Downlight - B4RD-G1

Specify fixture part number. (All boxes must be filled in to correctly order)

B4RD__

BeveLED Trim Style

F
Trimmed with Flange (use with all materials)

L
Trimless Spackle-in (use with sheetrock and plaster only)

M
Millwork Knife-Edge (use with wood and stone)

Wattage Options

Classic White Light

09G1
9W LED

12G1
12W LED

16G1
16W LED

24G1
24W LED

LED Color Options

27KS
2700K, 80+ CRI

27KH
2700K, 90+ CRI

30KS
3000K, 80+ CRI

30KH
3000K, 90+ CRI

35KS
3500K, 80+ CRI

35KH
3500K, 90+ CRI

40KS
4000K, 80+ CRI

40KH
4000K, 90+ CRI

Beam Options

25
25° beam

50
50° beam

90
90° beam

Lens Options

S
Solite (provided standard)

BF
Borosilicate Frosted

Trim Finish Options

WH
White

SC
Conduit Silver

GR
Grey

BL
Black

BZ
Bronze

PR
Primer Finish

RAL
Custom Color Specify RAL #

Housing Options

NCSM
New Construction Narrow Width

NC
New Construction

NCCP
Chicago Plenum

NCIC
Insulation Contact Rated / Airtight (1)

Voltage Options
Select one

UNV
120V-277V

120V

Dimming Driver Options

For use with Universal Voltage 120V - 277V

No Additional Charge

D6E
EldoLED 0-10V, 1% (provided standard)

D6F
EldoLED 0-10V, 1%

D4E
Lutron 5 ECO, 5% (1)

D4H
Lutron H ECO, 1% Fade (1)

D6A
EldoLED 0-10V, 0.1%

D6B
EldoLED 0-10V, 0.1%

D7
EldoLED DALI, 0.1%

D18
Moons DMX, 0.1%

For use with 120V only

No Additional Charge

D19
Phase 2-wire, 1% (1)

D3
Lutron 2-wire, 1%

Acessories (Optional)*

CB27
27" C-Channel Bars

CB52
52" C-Channel Bars

EM
Emergency Battery (2)

EMW
Emergency Battery Wet Location (2)

*Residential grade nailer bars provided standard

Notes: 1 Not available with 9W.
2 For NC and NCSM housings only. NCSM housing requires above ceiling access.

TRIM FINISH OPTIONS


White


Grey


Black


Bronze


Custom RAL (example)


Custom RAL (example)

Custom colors and primer finish also available

USAI LIGHTING COLLABORATORY
13 Crosby Street
New York, NY 10013
845-234-4090
showroom@usailighting.com

USAI LIGHTING HEADQUARTERS
1126 River Road
New Windsor, NY 12553
T: 845–565–8500
info@usailighting.com

© 2019. USAI, LLC. All rights reserved.
All designs protected by copyright. Covered by US Patents: 8,581,520, 8,456,109, 8,742,695, 9,671,091 and 7,832,889. Patents pending. USAI and BeveLED are registered trademarks of USAI, LLC.
Revised 10/02/2019

BeveLED® 2.2 Basic
4.5" Round Downlight - B4RD-G1

Trimmed - B4RDF-G1

TRIM DETAILS

Trimmed - B4RDF

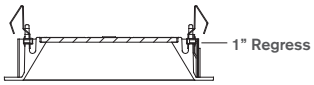

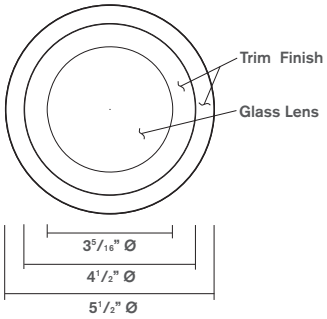

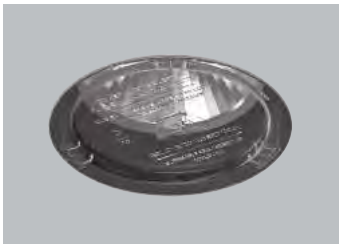

Clear acrylic overspray protector provided standard with every housing to keep out dust and contaminants during construction. Allows for use as work light.

HOUSING OPTIONS

New Construction Narrow Width - NCSM
NCSM with Emergency Battery*

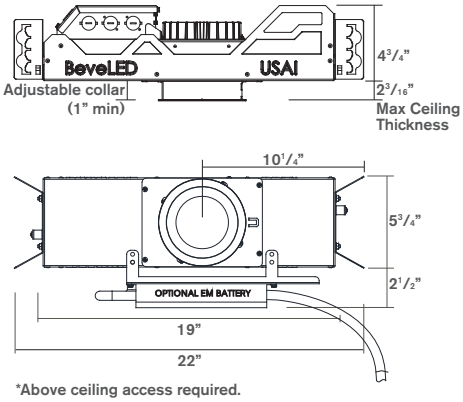

*Above ceiling access required.

New Construction - NC
Insulation-Contact Rated - NCIC
Chicago Plenum Rated - NCCP
NC with Emergency Battery

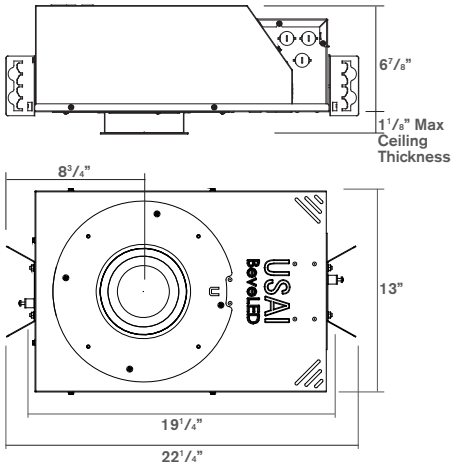

USAI LIGHTING COLLABORATORY
13 Crosby Street
New York, NY 10013
845-234-4090
showroom@usailighting.com

USAI LIGHTING HEADQUARTERS
1126 River Road
New Windsor, NY 12553
T: 845–565–8500
info@usailighting.com

© 2019. USAI, LLC. All rights reserved.
All designs protected by copyright. Covered by US Patents: 8,581,520, 8,456,109, 8,742,695, 9,671,091 and 7,832,889. Patents pending. USAI and BeveLED are registered trademarks of USAI, LLC.
Revised 10/02/2019

BeveLED® 2.2 Basic
4.5" Round Downlight - B4RD-G1

Trimless - B4RDL-G1

TRIM DETAILS

Trimless - B4RDL

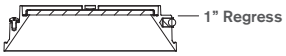

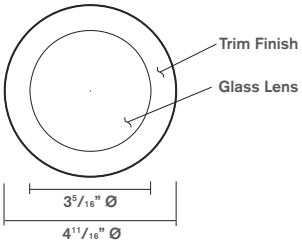



Clear acrylic overspray protector provided standard with every housing to keep out dust and contaminants during construction. Allows for use as work light.

HOUSING OPTIONS

New Construction Narrow Width - NCSM
NCSM with Emergency Battery*

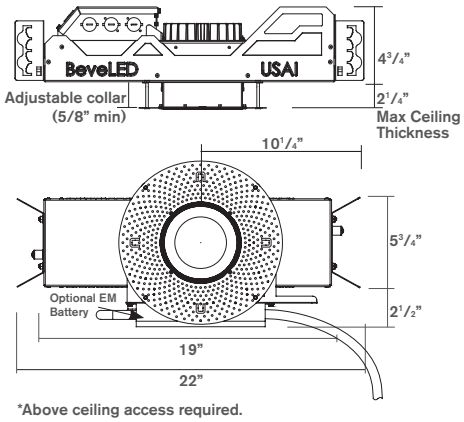

*Above ceiling access required.

New Construction - NC
Insulation-Contact Rated - NCIC
Chicago Plenum Rated - NCCP
NC with Emergency Battery

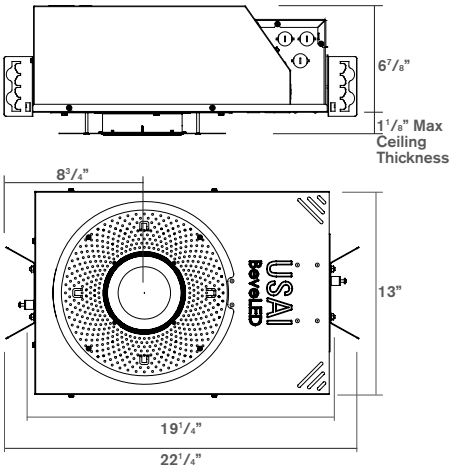

USAI LIGHTING COLLABORATORY
13 Crosby Street
New York, NY 10013
845-234-4090
showroom@usailighting.com

USAI LIGHTING HEADQUARTERS
1126 River Road
New Windsor, NY 12553
T: 845–565–8500
info@usailighting.com

© 2019. USAI, LLC. All rights reserved.
All designs protected by copyright. Covered by US Patents: 8,581,520, 8,456,109, 8,742,695, 9,671,091 and 7,832,889. Patents pending. USAI and BeveLED are registered trademarks of USAI, LLC.
Revised 10/02/2019

BeveLED® 2.2 Basic
4.5" Round Downlight - B4RD-G1

Millwork - B4RDM-G1

TRIM DETAILS

Millwork - B4RDM

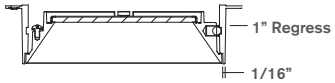

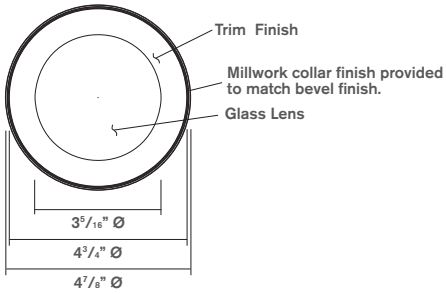



Clear acrylic overspray protector provided standard with every housing to keep out dust and contaminants during construction. Allows for use as work light.

HOUSING OPTIONS

New Construction Narrow Width - NCSM
NCSM with Emergency Battery*

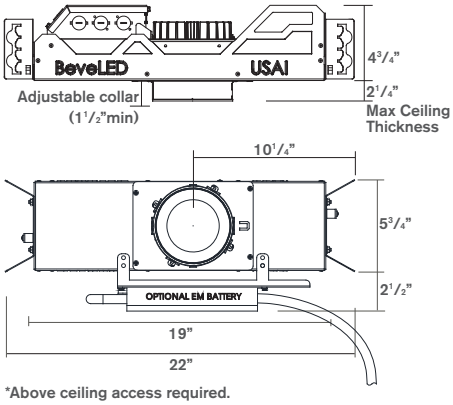

*Above ceiling access required.

New Construction - NC
Insulation-Contact Rated - NCIC
Chicago Plenum Rated - NCCP
NC with Emergency Battery

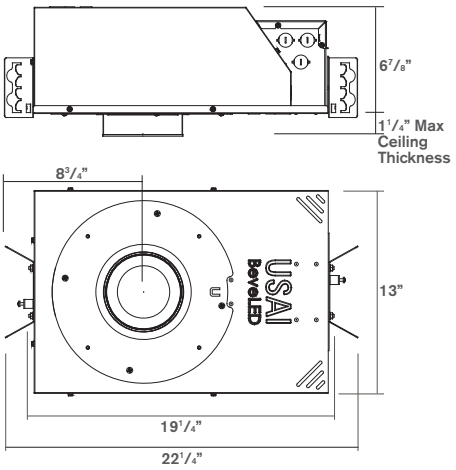

USAI LIGHTING COLLABORATORY
13 Crosby Street
New York, NY 10013
845-234-4090
showroom@usailighting.com

USAI LIGHTING HEADQUARTERS
1126 River Road
New Windsor, NY 12553
T: 845–565–8500
info@usailighting.com

© 2019. USAI, LLC. All rights reserved.
All designs protected by copyright. Covered by US Patents: 8,581,520, 8,456,109, 8,742,695, 9,671,091 and 7,832,889. Patents pending. USAI and BeveLED are registered trademarks of USAI, LLC.
Revised 10/02/2019

BeveLED® 2.2 Basic
4.5" Round Downlight - B4RD-G1

BEVELED BASIC SPECIFICATIONS

FIELD REPLACEABLE LED LIGHT ENGINE
is serviceable through the aperture without tools or with a Philips screwdriver. All USAI Lighting light engines feature industry-leading color consistency.

FIELD REPLACEABLE DRIVER
Unless otherwise specified, a 0-10V, 100%-1% solid state electronic constant current integral D6E dimming driver with a high power factor is provided standard and sources 2mA. All integral dimming drivers are located within the fixture housing and are serviceable from below the ceiling through the aperture. Some on-time delay may be experienced depending on control system used. All dimming drivers comply with IEEE C62.41 surge protection.

EMERGENCY BATTERY
IOTA emergency battery provides backup power for 90 minutes. NC EM fixtures are provided with an integral emergency battery with integral test switch and can be serviced through the aperture from below the ceiling plane. NCSM EM fixtures are provided with an integral emergency battery with a remote test switch, which comes with a 24" lead length for location of the test switch. Remote EM test switch is dry/damp only; select EMW emergency option for a wet location-rated EM test switch. NCSM EM fixtures require above ceiling access for service of the EM pack. Fixtures that have no USAI EM option may be connected to an inverter (by others) for emergency lighting.

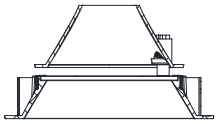

Integral Emergency Test Switch included with NC housing

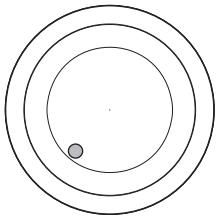



Remote Emergency Test Switch included with NCSM housing (above ceiling access required).

HOUSING
All BeveLED Basic fixtures are field-flexible which allows for field changes from trimless or millwork to trimmed with a simple components change with parts from USAI. Housings are fabricated of 20 ga. steel construction with thru wire J-box, 4 in 4 out at min. 90°C, #12 AWG thru branch circuit wiring, except for NCSM which is fabricated of 18 ga. steel. NCIC housing for use with 9W, 12W, and 16W light engines only is rated for direct contact with spray foam insulation of R-42 or less.

MOUNTING
B4RDF overlap flange fixtures are designed for use in sheetrock, acoustical ceiling tile, and many other ceiling materials. B4RDL trimless fixtures are provided with a spackle collar and are designed for use in sheetrock/mud-in ceiling applications. B4RDM millwork fixtures are provided with a millwork collar in finish to match trim finish specified and are designed for use in wood/millwork, stone and tile construction applications. Butterfly brackets and residential grade adjustable nailer bars extendible from 14" to 24" centers with integral nails are provided standard for attachment to building structure. C-channel bars are optionally available for acoustical ceiling applications.



Residential-grade nailer bars provided standard.

FIXTURE WEIGHT
NC, NCIC, and NCCP housings weigh 16 lbs. NCSM housing weighs 10 lbs., NCSM with EM weighs 16.5 lbs, and NC housing with EM weighs 24.5 lbs.

WARRANTY
Based on IESNA LM80-2008, BeveLED has a 50,000 hour rated life at 70% lumen maintenance (L70). USAI Lighting Warranty covers replacement parts for 5 years from date of shipment. Ambient temperatures at fixture location should not exceed 40°C during normal operation.

CEILING CUT OUT
B4RDF Trimmed with Overlap Flange: 5-1/16" ∅
B4RDL Trimless Spackle-in: 5-1/2" ∅
B4RDM Millwork Knife-edge: 4-15/16" ∅

LISTINGS
Dry/Damp/Wet location. Remote EM test switch is dry/damp only. Select EMW option for wet location remote test switch. UL2043 rated for use in air handling plenums. NRTL/CSA-US tested to UL standards. IBEW union made.

NOTES
• Use of pressure washer voids warranty

PHOTOMETRICS
Consult factory or website for IES files. Tested in accordance with IESNA LM79.

USAI LIGHTING COLLABORATORY
13 Crosby Street
New York, NY 10013
845-234-4090
showroom@usailighting.com

USAI LIGHTING HEADQUARTERS
1126 River Road
New Windsor, NY 12553
T: 845–565–8500
info@usailighting.com

© 2019. USAI, LLC. All rights reserved.
All designs protected by copyright. Covered by US Patents: 8,581,520, 8,456,109, 8,742,695, 9,671,091 and 7,832,889. Patents pending. USAI and BeveLED are registered trademarks of USAI, LLC.
Revised 10/02/2019

R1

Lam Partners

DIMMING DRIVER COMPAT
SELECTION GUIDE
D3 / DIML3

DIMMING DRIVER WIRING SCHEMES:

NOTES:
Wiring diagrams are examples of typical installations intended to illustrate the number of wires that must be run to fixture. These diagrams are not intended to specify all equipment necessary for a given dimming circuit. Refer to specific dimmer manufacturer's documentation for details.

IMPORTANT SAFETY INSTRUCTIONS - SAVE THESE INSTRUCTIONS

1. Keep these instructions in a safe place for future reference.
2. Only qualified electricians in accordance to local codes should install these fixtures.
3. De-energize the electrical circuit at the circuit breaker prior to installation process or servicing.
4. Make sure all connections are in accordance with the National Electrical Code and any local regulations.
5. Cap any wires not used separately (not together).

D3 / DIML3 LED: Lutron Hi-Lume A-Series 2 Wire Fwd Phase (with neutral) / LED Dimming Driver Wiring (Dims down to 1%) 120V

D3 / DIML3 Dimmer Compatibility Chart

Manufacturer	Product	Part Number	Dimmed Light Output Range	Qty Fixtures Per Dimmer* Fixture Wattage	
120V Only				39W and Less	40W - 80W
ETC	Sensor+ Cabinet	ELV10	100% - 1%	1 – 26	1 – 13
ETC	Unison DRd Cabinet	ELV10	100% - 1%	1 – 26	1 – 13
Lutron	Maestro Wireless® 600W dimmer	MRF2-6ND-120-	100% - 1%	1 – 8	1 – 4
Lutron	Maestro Wireless® 1000W dimmer	MRF2-10ND-120-	100% - 1%	1 – 13	1 – 6
Lutron	HomeWorks® QS adaptive dimmer	HQRD-6NA-	100% - 1%	1 – 8	1 – 4
Lutron	HomeWorks® QS 600W dimmer	HQRD-6ND-	100% - 1%	1 – 8	1 – 4
Lutron	HomeWorks® QS 1000 W dimmer	HQRD-10ND-	100% - 1%	1 – 13	1 – 6
Lutron	Caseta Wireless® Pro 1000W dimmer	PD-10NXD-	100% - 1%	1 – 13	1 – 6
Lutron	Stanza® dimmer	SZ-6ND-	100% - 1%	1 – 8	1 – 4
Lutron	RadioRA® 2 adaptive dimmer	RRD-6NA-	100% - 1%	1 – 8	1 – 4
Lutron	RadioRA® 2 1000 W dimmer	RRD-10ND-	100% - 1%	1 – 6	1 – 3
Lutron	myRoom DIN power module	MQSE-4A1-D	100% - 1%	1 – 6	1 – 3
Lutron	HomeWorks® QS wallbox power module	HQRJ-WPM-6D-120-	100% - 1%	1 – 26	1 – 13
Lutron	Homeworks® DIN power module	LQSE-4A1-D	100% - 1%	1 – 6	1 – 3
Lutron	HomeWorks® wallbox power module	HWI-WPM-6D-120	100% - 1%	1 – 26	1 – 13
Lutron	GRAFIK Eye® QS control unit	QSGR-, QSGRJ-	100% - 1%	1 – 26	1 – 13
Lutron	GRAFIK Eye® 3000 control unit	GRX-3100-, GRX-3500-	100% - 1%	1 – 26	1 – 13
Lutron	RPM-4U module	HW-RPM-4U-120, LP-RPM-4U-120	100% - 1%	1 – 26	1 – 13
Lutron	RPM-4A module	HW-RPM-4A-120, LP-RPM-4A-120	100% - 1%	1 – 26	1 – 13
Lutron	GP dimming panels	Various	100% - 1%	1 – 26	1 – 13
Lutron	Ariadni CL 250W dimmer	AYCL-253P-	100%-1%	1 – 8	1 – 4
Lutron	Diva CL 250W dimmer	DVCL-253P-, DVSCCL-253P-	100%-1%	1 – 8	1 – 4
Lutron	Grafik T CL or RF CL dimmer	GT-250M-, GTJ-250M-	100%-1%	1 – 8	1 – 4
Lutron	Nova T CL 250W dimmer	NTCL-250-	100%-1%	1 – 10	1 – 5

* NOTE: Refer to dimmer manufacturer's documentation for installation instructions and circuit details.

D3 / DIML3
2 WIRE PHASE DIMMING

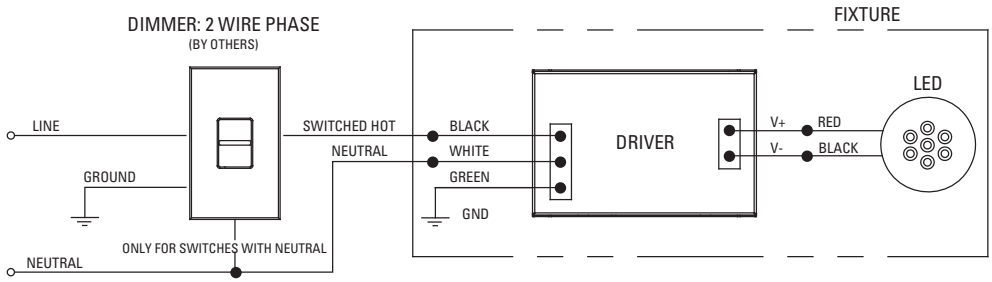

USAI Lighting

www.usailighting.com
info@usailighting.com

1126 River Road
New Windsor, NY 12553

T 845–565–8500
F 845–561–1130

©2016. USAI, LLC.
All rights reserved.
All designs protected by copyright.

I2-264-3 Revised 03/22/2017

R1

Lam Partners ARCHITECTURAL LIGHTING DESIGN

USAI Lighting

DIMMING DRIVER COMPATI SELECTION GUIDE
D4E / DIML4E and D4H /DIML4H

DIMMING DRIVER WIRING SCHEMES:

NOTES:
Wiring diagrams are examples of typical installations intended to illustrate the number of wires that must be run to fixture. These diagrams are not intended to specify all equipment necessary for a given dimming circuit. Refer to specific dimmer manufacturer's documentation for details.

IMPORTANT SAFETY INSTRUCTIONS - SAVE THESE INSTRUCTIONS

1. Keep these instructions in a safe place for future reference.
2. Only qualified electricians in accordance to local codes should install these fixtures.
3. De-energize the electrical circuit at the circuit breaker prior to installation process or servicing.
4. Make sure all connections are in accordance with the National Electrical Code and any local regulations.
5. Cap any wires not used separately (not together).

D4E / DIML4E LED: Lutron 5 Series EcoSystem LED Driver / LED Dimming Driver Wiring (Dims down to 5%)

D4E / DIML4E EcoSystem Dimmer Compatibility Chart

Manufacturer	Product	Part Number	Dimmed Light Output Range	Qty Fixtures Per Control* Fixture Wattage	
120V / 277V				39W and Less	40W - 80W
Lutron	PowPak dimming module	RMJ-ECO32-DV-B	100%–5%	1–32	1 – 16
Lutron	Energi Savr Node	QSN-1ECO-S, QSN-2ECO-S	100%–5%	1–64	1 – 32
Lutron	GRAFIK Eye QS (120V ONLY)	QSGRJ- E, QSGR- E	100%–5%	1–64	1 – 32
Lutron	Quantum	Various	100%–5%	1–64	1 – 32

* NOTE: Number of fixtures may be higher if wattage is less than maximum values shown. Refer to dimmer manufacturer's documentation for installation instructions and circuit details.

D4H / DIML4H LED: Lutron H Series EcoSystem LED Driver with Fade to Black (dims down to 1%)

D4H / DIML4H EcoSystem Dimmer Compatibility Chart

Manufacturer	Product	Part Number	Dimmed Light Output Range	Qty Fixtures Per Control* Fixture Wattage	
120V / 277V				39W and Less	40W - 80W
Lutron	PowPak dimming module	RMJ-ECO32-DV-B	100%–1%	1–32	1 – 16
Lutron	Energi Savr Node	QSN-1ECO-S, QSN-2ECO-S	100%–1%	1–64	1 – 32
Lutron	GRAFIK Eye QS (120V ONLY)	QSGRJ- E, QSGR- E	100%–1%	1–64	1 – 32
Lutron	Quantum	Various	100%–1%	1–64	1 – 32

* NOTE: Number of fixtures may be higher if wattage is less than maximum values shown. Refer to dimmer manufacturer's documentation for installation instructions and circuit details.

D4E / DIML4E and D4H / DIML 4H EcoSystem CONTROLS

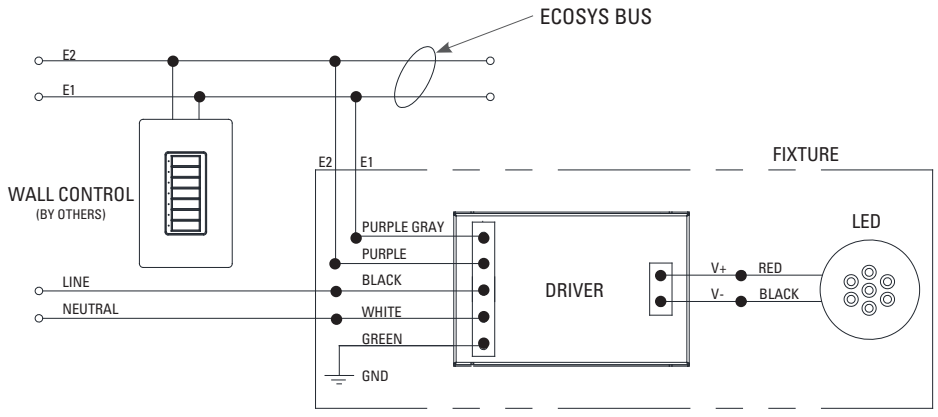

USAI Lighting

www.usailighting.com
info@usailighting.com

1126 River Road
New Windsor, NY 12553

T 845–565–8500
F 845–561–1130

©2016. USAI, LLC.
All rights reserved.
All designs protected by copyright.

I2-264-4EH Revised 03/22/2017

R1

Lam Partners
ARCHITECTURAL LIGHTING DESIGN

USAI Lighting

DIMMING DRIVER COMPATIBILITY SELECTION GUIDE
D6A / DIML6A and D6E / DIML6E
D6B / DIML6B and D6F / DIML6F

IMPORTANT SAFETY INSTRUCTIONS - SAVE THESE INSTRUCTIONS

1. Keep these instructions in a safe place for future reference.
2. Only qualified electricians in accordance to local codes should install these fixtures.
3. De-energize the electrical circuit at the circuit breaker prior to installation process or servicing.
4. Make sure all connections are in accordance with the National Electrical Code and any local regulations.
5. Cap any wires not used separately (not together).

D6A / DIML6A and D6E / DIML6E LED Dimming Compatibility Table

D6A / DIML6A and D6E / DIML6E are linearly programmed dimming drivers for use with the dimming controls listed in the table below.
D6A / DIML6A = EldoLED SOLOdrive 0-10V control dims from 100% to 0.1%
D6E / DIML6E = EldoLED ECOdrive 0-10V control dims from 100% to 1%

D6A / DIML6A and D6E / DIML6E Dimmer Compatibility Chart

Manufacturer	Product	Part Number	Dimmed Light Output Range			Qty Fixtures Per Dimmer*
120V & 277V			DIML6A		6E	Refer to manufacturer's dimmer load rating for maximum and minimum fixture quantities per dimmer. Enlighted compatible.
Lutron	Diva	DVTV/NFTV with PP-20	99% -	0.1%	1%	
Lutron	Nova T	NTFTV with PP-20	99% -	0.1%	1%	
Lutron	Energi Savr Node	QSN-4T16-S	100% -	0.1%	1%	
Lutron	GP Dimming Panels	TVM2 Module	99% -	0.1%	1%	
Lutron	Interfaces	GRX-TVI w/ GRX3503	100% -	0.1%	1%	
Sensor Switch	nIO	nIO EZ	100% -	0.1%	1%	
enlighted	Control Unit	CU-3E-1R	100% -	0.1%	1%	

D6B / DIML6B and D6F / DIML6F LED Dimming Compatibility Table

D6B / DIML6B and D6F / DIML6F are logarithmic-programmed dimming drivers for use with the dimming controls listed in the table below.
D6B / DIML6B = EldoLED SOLOdrive 0-10V control dims from 100% to 0.1% D6F / DIML6F = EldoLED ECOdrive 0-10V control dims from 100% to 1%

D6B / DIML6B and D6F / DIML6F Dimmer Compatibility Chart

Manufacturer	Product	Part Number	Dimmed Light Output Range			Qty Fixtures Per Dimmer*
120V & 277V			DIML6B		6F	Refer to manufacturer's dimmer load rating for maximum and minimum fixture quantities per dimmer. Enlighted compatible.
Bush-Jaeger	Electronic potentiometer	2112U-101	100% -	0.1%	1%	
Jung	Electronic potentiometer	240-10	100% -	0.1%	1%	
Leviton	Iluma Tech dimmer	IP710-DLX	100% -	0.1%	1%	
Lightolier (Philips)	Momentum (120V ONLY)	ZP600FAM120	100% -	0.1%	1%	
Merten	Electronic potentiometer	5729	100% -	0.1%	1%	
Pass & Seymour	Titan	CD4FB-W	100% -	0.1%	1%	
Watt Stopper	Miro	DCLV1	100% -	0.1%	1%	
Synergy	Wallbox Dimmers	ISD BC	100% -	0.1%	1%	
ABB	i-bus	SD/S 2.16.1	100% -	0.1%	1%	
Crestron	Modules	GLX-DIMFLV8, GLXP-DIMFLV8	100% -	0.1%	1%	
Crestron	Green Light	GLPAC-DIMFLV4-, GLPAC-DIMFLV8-	100% -	0.1%	1%	
Crestron	Green Light Power Pack	GLPP-DIMFLVEX-PM, GLPP-1DIMFLV2EX-PM, GLPP-1DIMFLV3EX-PM	100% -	0.1%	1%	
Crestron	DIN Rail Analog Output Module	DIN-A08	100% -	0.1%	1%	
Crestron	DIN Rail 0-10V Fluorescent Dimmer	DIN-4DIMFLV4	100% -	0.1%	1%	
Crestron	iLux 0-10V Dimmer Expansion Module	CLS-EXP-DIMFLV	100% -	0.1%	1%	
enlighted	Control Unit	CU-3E-1R	100% -	0.1%	1%	

DIMMING DRIVER WIRING SCHEMES:

NOTES: Wiring diagrams are examples of typical installations intended to illustrate the number of wires that must be run to fixture. These diagrams are not intended to specify all equipment necessary for a given dimming circuit. Refer to specific dimmer manufacturer's documentation for details.

D6 / DIML6
0-10V DIMMING W/RELAY TO SWITCH POWER

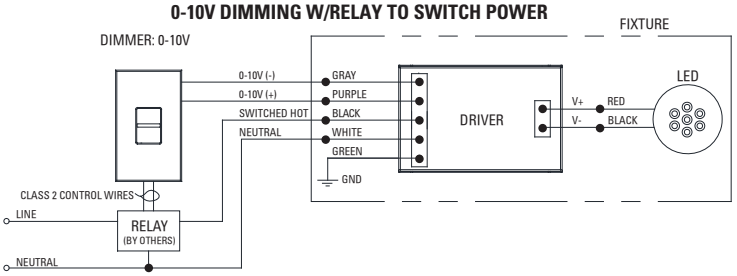

D6 / DIML6
0-10V DIMMING (NO RELAY)

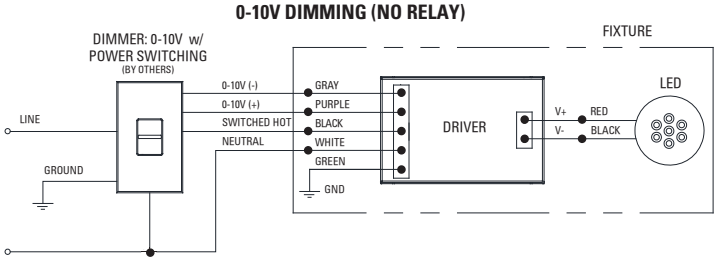

USAI Lighting

www.usailighting.com
info@usailighting.com

1126 River Road
New Windsor, NY 12553

T 845–565–8500
F 845–561–1130

©2016. USAI, LLC.
All rights reserved.
All designs protected by copyright.

I2-264-6 Revised 08/16/2019

USAI Lighting

DIMMING DRIVER COMPAT
SELECTION GUIDE
D7 / DIML7 and D7E

DIMMING DRIVER WIRING SCHEMES:

NOTES:
Wiring diagrams are examples of typical installations intended to illustrate the number of wires that must be run to fixture. These diagrams are not intended to specify all equipment necessary for a given dimming circuit. Refer to specific dimmer manufacturer's documentation for details.

IMPORTANT SAFETY INSTRUCTIONS - SAVE THESE INSTRUCTIONS

1. Keep these instructions in a safe place for future reference.
2. Only qualified electricians in accordance to local codes should install these fixtures.
3. De-energize the electrical circuit at the circuit breaker prior to installation process or servicing.
4. Make sure all connections are in accordance with the National Electrical Code and any local regulations.
5. Cap any wires not used separately (not together).

D7 / DIML7 and D7E Dimming Driver Wiring

D7 / DIML7 and D7E are linearly programmed dimming drivers.
D7 / DIML7 = EldoLED SOLOdrive DALI control dims from 100% to 0.1%
D7E = EldoLED ECOdrive DALI control dims from 100% to 1%

D7 / DIML7 / D7E
DALI CONTROLS

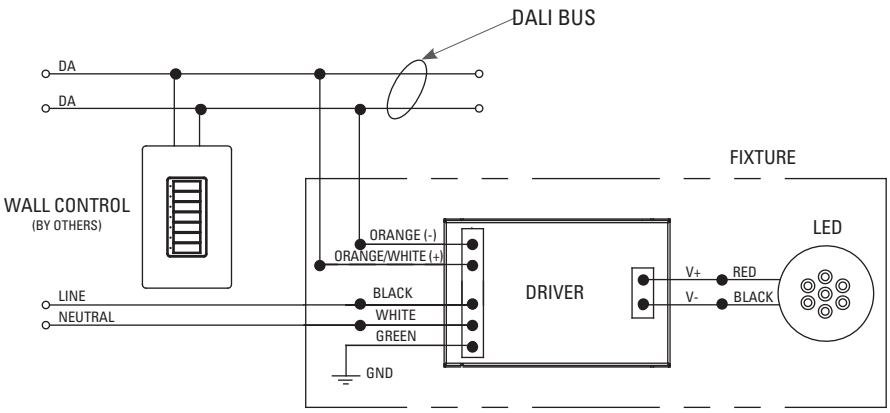

www.usailighting.com
info@usailighting.com
1126 River Road
New Windsor, NY 12553
T 845–565–8500
F 845–561–1130
©2016. USAI, LLC.
All rights reserved.
All designs protected by copyright.
I2-264-7 Revised 08/14/2017

USAI Lighting

DIMMING DRIVER COMPAT
SELECTION GUIDE
D18

DIMMING DRIVER WIRING SCHEMES:

NOTES:
Wiring diagrams are examples of typical installations intended to illustrate the number of wires that must be run to fixture. These diagrams are not intended to specify all equipment necessary for a given dimming circuit. Refer to specific dimmer manufacturer's documentation for details.

IMPORTANT SAFETY INSTRUCTIONS - SAVE THESE INSTRUCTIONS

1. Keep these instructions in a safe place for future reference.
2. Only qualified electricians in accordance to local codes should install these fixtures.
3. De-energize the electrical circuit at the circuit breaker prior to installation process or servicing.
4. Make sure all connections are in accordance with the National Electrical Code and any local regulations.
5. Cap any wires not used separately (not together).

D18 Dimming Driver Wiring

D18 are programmed dimming drivers.
D18 Moons DMX control dims from 100% to 1%

DMX BUS -
SHIELDED DATA CABLE

The data cable used must meet the following requirements:

- type: shielded, 2-conductor twisted pair
- maximum capacitance between conductors: 30 pF/ft
- maximum capacitance between conductor and shield: 55 pF/ft
- maximum resistance: 0.02 ohms/ft
- normal impedance: 100-140 ohms
- conductive core: 24 AWG is recommended

If 3-wire data cables are preferred, we suggest a Belden 9841 or equivalent cable which meets the specifications for EIA RS-485 applications. Do not use standard microphone cables: they cannot transmit DMX512 data reliably over long distances. NOTE: DMX link termination device, provided through Dip Switch on connection board, should be used on last fixture in line on a circuit to avoid signal loss.

D18
DMX CONTROLS

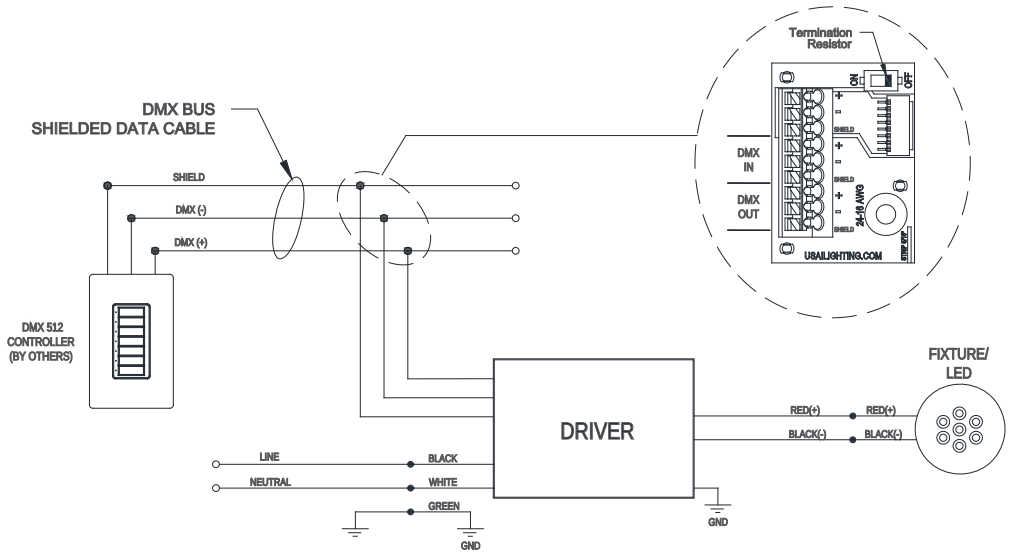

www.usailighting.com
info@usailighting.com
1126 River Road
New Windsor, NY 12553
T 845–565–8500
F 845–561–1130

©2016. USAI, LLC.
All rights reserved.
All designs protected by copyright.
I2-264-18 Revised 07/03/2018

USAI Lighting

DIMMING DRIVER COMPATI
SELECTION GUIDE
D19 / DIML19

DIMMING DRIVER WIRING SCHEMES:

NOTES:
Wiring diagrams are examples of typical installations intended to illustrate the number of wires that must be run to fixture. These diagrams are not intended to specify all equipment necessary for a given dimming circuit. Refer to specific dimmer manufacturer's documentation for details.

IMPORTANT SAFETY INSTRUCTIONS - SAVE THESE INSTRUCTIONS

1. Keep these instructions in a safe place for future reference.
2. Only qualified electricians in accordance to local codes should install these fixtures.
3. De-energize the electrical circuit at the circuit breaker prior to installation process or servicing.
4. Make sure all connections are in accordance with the National Electrical Code and any local regulations.
5. Cap any wires not used separately (not together).

D19 / DIML19 LED: Hatch XTC series or equivalent - Forward and Reverse Phase Dimming Driver. Dims down to 1% contingent upon dimmer specification and load. 120V only.

D19 / DIML19
2 WIRE PHASE DIMMING

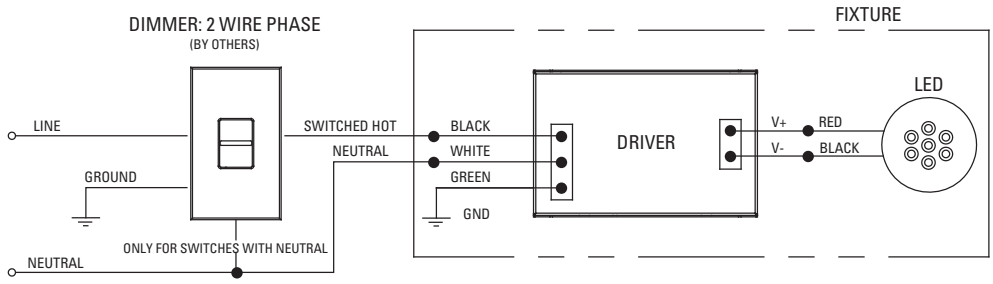

D19 / DIML19 Dimmer Compatibility Chart

120V ONLY		
Forward Phase / TRIAC Dimming		
Manufacturer	Product	Qty Fixtures Per Dimmer
Leviton	IPL06-10Z	Use fixture wattage per fixture specification sheet to determine number of fixtures per dimmer. Max number of fixtures is limited by dimmer load rating.
	6613-xxx	
Lutron	S-600P	
	S-603P	
	DV-600P	
	DV-603P	
	DVSC-603P	
	CT-600P	
	CT-603P	

120V ONLY		
Reverse Phase / ELV Dimming		
Manufacturer	Product	Qty Fixtures Per Dimmer
Leviton	6615	Use fixture wattage per fixture specification sheet to determine number of fixtures per dimmer. Max number of fixtures is limited by dimmer load rating.
	IPE04-xxx	
Lutron	NTELV-300	
	NTELV-600	
	SELV-300P	
	SELV-303P	
	DVELV-300P	
	DVELV-303P	

www.usailighting.com
info@usailighting.com
1126 River Road
New Windsor, NY 12553
T 845–565–8500
F 845–561–1130
©2016. USAI, LLC.
All rights reserved.
All designs protected by copyright.
I2-264-19 Revised 03/22/2017

v2 Lighting Group™

CORE 400 surface mount

S1

Lam Partners ARCHITECTURAL LIGHTING DESIGN

PROJECT

Job _____

Type _____

Part # _____

Notes

SPECIFICATIONS

Source	Xicato XTM LED module - up to 4000 lumens
C.C.T.	2700K, 3000K, 3500K or 4000K
Color Consistency	1x2 SDCM (MacAdam) along BBL, CCT +/- 40K to 70K, Duv +/- .001
CRI (Ra)	83 or 98
Driver / Location	Included / Remote mount or deep canopy options
Dimming	0-10V or phase dimming to 10% standard; DALI, DMX and 1% dimming available
Input Voltage	100 to 277VAC, phase dimmable versions are 120VAC only
Power	Up to 48 watts max, depending on LED module / driver
Reflector	11°, 25°, 41°, 51°, or 83° - field replaceable without tools
Material	CNC machined aluminum with stainless steel hardware
Finish	Powder coat - TGIC polyester for exterior and interior use
Weight	7 lb. [3.2 kg]
Location	Listed for Wet & Damp locations
Approvals	ETL Listed to UL 1598, 2108, 8750 and CSA C22.2# 9 & #250.0
L80 Life	> 50,000 hours at 80% lumen maintenance based on IESNA LM-80-08
Warranty	Lifetime Limited Warranty - see warranty for details
IES Files	LM-79-08 IES files available at www.v2LightingGroup.com/downloads
Modifications	Any modification or customization is possible - consult factory



LED · INDOOR OUTDOOR · WET LOCATION · DIMMABLE · LIGHTSOURCE BY XICATO · MADE IN U.S.A. · TITLE 24 COMPLIANT · c ETL us LISTED Intertek 4001580

ORDERING LOGIC

Model	Driver Location	Dimming	Mounting Location	Output	CRI *	C.C.T.	Reflector	Shell	Options
C4SM -				-				-	-
	R=Remote **D**=Deep Canopy	**N**=None **P**=Phase **V**=0-10V **Z**=Other	**D**=Damp **W**=Wet	**07**=700 lm **10**=950 lm **13**=1300 lm **20**=2000 lm **30**=3000 lm **40**=4000 lm	**83**=83 **98**=98*	**27**=2700K **30**=3000K **35**=3500K **40**=4000K	**11**=11° ** **25**=25° **41**=41° **51**=51° **83**=83° **	**XX** (see chart on page 4) **ZZ**=Custom	

* 98 CRI not available in 4000 lm

** Not available with wet location

Example Part Number: **C4SM-RND-20832741-S3**

CORE **4**00 **S**X Surface **M**ount **- R**emote Driver, **N**o Dimming, **D**amp Location **- 20**00 lm, **83** CRI, **27**00K, **41**° Reflector **- S3** Red Shell

DIMENSIONS

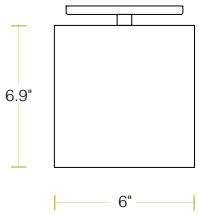



Standard shallow canopy for remote mounted LED drivers

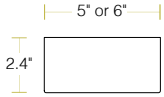

Optional deep canopy for canopy mounted LED drivers
Order Code = **D**
Diameter depends on LED driver size

All canopies fit standard 3.5" and 4" round and octagonal junction boxes

Not to scale, dimensions are nominal
Consult factory for CAD drawings

LED OPTIONS

Reflector Option	LED Specifications				
	LES[1]	CRI	Lumens[2, 3]	Wattage[4] (W)	Efficacy[5] (lm/W)
11°, 25°, 41°, 51° & 83°	19mm	Ra = 83 ± 3	700	5.6	129
			950	8.2	118
			1300	11.7	111
			2000	19.5	102
			3000	29.3	102
			4000	39.1	102
		Ra = 98 R9 ≥ 90 R15 ≥ 95	700	7.4	97
			950	10.9	89
			1300	15.6	83
			2000	26.4	76
			3000	34.1	88

1 LES: Light Emitting Surface diameter
2 ±10%
3 Source lumens - see photometrics on page 3 for LOR to calculate delivered lumens
4 Maximum luminaire wattage including LED driver = LED wattage x 1.2
5 Higher efficacies are available via lower drive currents - consult factory

CONTROL OPTIONS

Standard LED Drivers* (included in base price)	Order Code **V** = 0-10V dimming to 10%
	Order Code **P** = Phase dimming to 10% Compatible with both forward and reverse phase dimmers
Optional LED Drivers*	eldoLED 0-10V, DALI, or DMX dimming to 0%
	Lutron Hi-lume™ A-series, EcoSystem or forward phase dimming to 1%
	Lutron Hi-lume™ 5-series, EcoSystem dimming to 5%

* All LED drivers must be mounted in a deep canopy or remote
* Standard LED drivers are suitable for Wet Location
* Optional LED drivers are suitable for Damp Location
* For EM applications:
  All LED drivers may be used with 3rd party inverter style systems

 ©2015 v2 Lighting Group, Inc. Specifications subject to change without notice.

PHOTOMETRICS

LM-79-08 IES files available at www.v2LightingGroup.com/downloads

Beam Angle	Order Code	Intensity Plot (cd) (3000lm)	Polar Plot (cd) (3000lm)	Cone Diagram (3000lm)	Description
11°	**11**	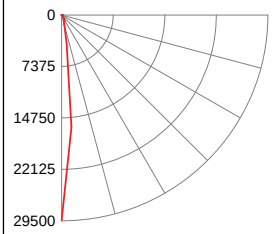	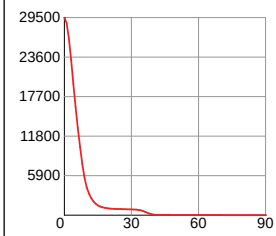	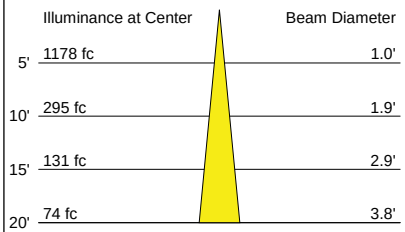	CBCP = 29,547 cd Beam Angle = 11° Field Angle = 23° LOR = 89.1 % Beam = full width @ 50% Field = full width @ 90%
25°	**25**	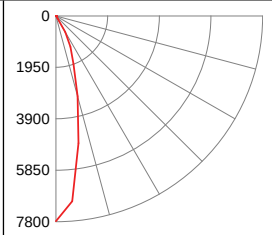	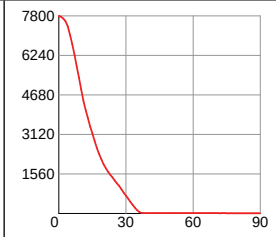	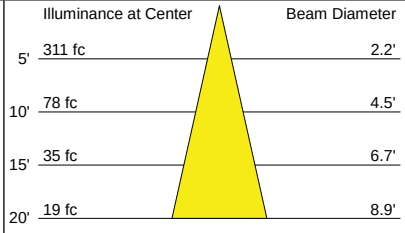	CBCP = 7,785 cd Beam Angle = 25° Field Angle = 59° LOR = 87.5 % Beam = full width @ 50% Field = full width @ 90%
41°	**41**	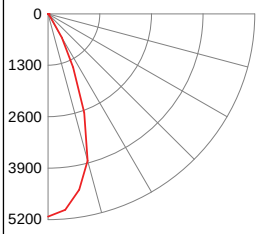	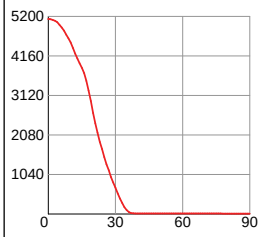	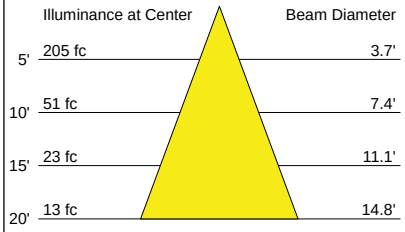	CBCP = 5,127 cd Beam Angle = 41° Field Angle = 62° LOR = 82.4 % Beam = full width @ 50% Field = full width @ 90%
51°	**51**	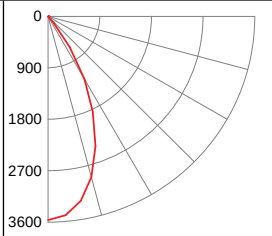	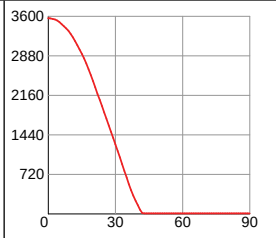	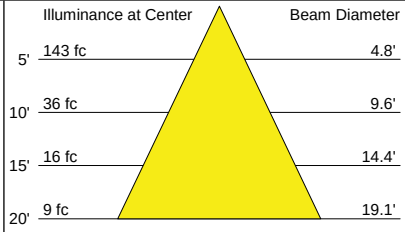	CBCP = 3,564 cd Beam Angle = 51° Field Angle = 76° LOR = 83.0 % Beam = full width @ 50% Field = full width @ 90%
83°	**83**	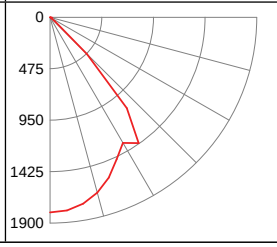	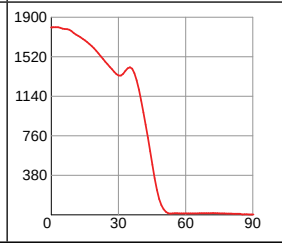	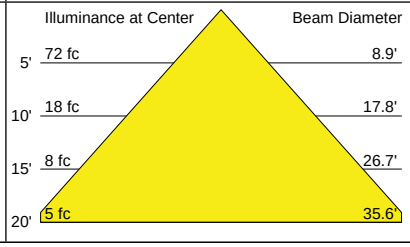	CBCP = 1,802 cd Beam Angle = 83° Field Angle = 96° LOR = 84.8 % Beam = full width @ 50% Field = full width @ 90%

Beam Shaping Options

Add the order code shown below to the options box at the end of the part number:

Order Code	Description
-HL	Honeycomb Louver
-DF	Diffusion Lens
-SF	Satin finish on any standard reflector
-LS	Linear Spread Lens (60° x 1°)
-WW	Wall Wash Lens (shifts beam 20° from vertical)

 ©2015 v2 Lighting Group, Inc. Specifications subject to change without notice.

COLOR OPTIONS

Anodized Effect


A1 Clear Silver


A2 Champagne


A3 Light Bronze


A4 Medium Bronze


A5 Dark Bronze


A6 Black

Metallic


M1 Pearl


M2 Sea Foam


M3 Forest Gray


M4 Charcoal Gray


M5 Gunmetal Gray


M6 Dove Gray


M7 Old Copper


M8 Old Brass

Basic

L1 Gloss White


L2 Gloss Light Gray


L3 Gloss Dark Gray


L4 Gloss Black

T1 Textured Matte White


T2 Textured Matte Light Gray


T3 Textured Metallic Dark Gray


T4 Textured Matte Black

Sparkle


S1 Light Orange


S2 Deep Orange


S3 Red


S4 Burgundy


S5 Violet


S6 Deep Blue


S7 Sky Blue


S8 Bright Green

The complete range of powder coat colors from Tiger Drylac is available - consult factory
Custom match powder coat colors are available - consult factory
Printed or on-screen colors are only approximations - consult v2 Color Chip Set Rev.4 before specifying

 ©2015 v2 Lighting Group, Inc. Specifications subject to change without notice.

VIA 2 LED

SURFACE

5 YEARS WARRANTY

LUMENWERX
WWW.LUMENWERX.COM

S1

Lam Partners
ARCHITECTURAL LIGHTING DESIGN



Shown with HLO flush



Shown with HLO 0.5" drop



Shown with HLO 1.0" drop

DESCRIPTION

Efficient and flexible, the Via 2 surface features numerous optical configurations including flush and drop diffusers. Via 2 can be installed as discrete luminaires, continuous runs, and patterns, with a wide range of lumen packages, color choices, and electrical and controls options. Via 2 is part of the larger Via family, which includes visually coordinated recessed and mounted luminaires, as well as other light distributions, including wall washing and asymmetric optics, and ChromaWerx (see separate specification sheets).

PROJECT: _____

TYPE: _____

NOTES: _____

up to 103 lm/w performance

ORDER GUIDE

VIA2S	HLO		LED		
LUMINAIRE ID	**OPTICS**	**LENS POSITION**	**LIGHT SOURCE**	**CRI**	**LUMEN PACKAGES**
VIA2S - via 2" surface	**HLO** - High-Efficiency Lambertian Optic	**FH** - Flush **0.5D** - 0.5" drop **1.0D** - 1.0" drop	**LED** - high performance LED	**80** - 80CRI **90** - 90CRI	**350** - min. low output 350lm/ft **500** - medium output 500lm/ft **750** - max. high output 750lm/ft **####** - other required lm/ft

COLOR TEMP.	LUMINAIRE LENGTH	VOLTAGE	DRIVER	ELECTRICAL
27 - 2700K **30** - 3000K **35** - 3500K **40** - 4000K	Standard sections - 2', 3', 4', 5', 8' & 12' For all other specify length **#FT** - nominal length in feet **#IN** - length in inches Continuous Run - for luminaires over 12' Minimum Individual section 2'	**120** - 120V **277** - 277V **UNV** - 120V-277V **347** - 347V (not available with Lutron)	**D1** - 1% dimming 0-10V **DA** - Dali **LTEA2W** - Lutron 1% - 2 wire FF 120V **LDE1** - Lutron Hi-lume 1% Eco **LDE5** - Lutron 5% EcoSystem	**1** - 1 circuit **+#EB** - emergency battery (min 6' fixture, except Lutron) **+#EM** - emergency light circuit **+#NL** - night light circuit **+GTD###** - generator transfer device, 120V or 277V

MOUNTING	FINISH	CONTROLS	OPTIONS
GRD - grid ceiling **DRC**- drywall ceiling	**W** - matte white **AL** - aluminum **B** - matte black **CF#** - custom finish specify RAL#	<u>STANDALONE CONTROLS</u> **OMS** - Onboard Occupancy **ODS** - Onboard Daylight **OCS** - Onboard Occupancy & Daylight <u>CONNECTED CONTROLS</u> **CCS()** - **LU**-Lutron, **EN**-Enlighted, **OS**-Osram, **CR**-Crestron. To specify see information on page 3	**FU** - fuse **ITR** - integrated track (consult factory) **CU** - custom

See page 2 for ordering code detailed information

CROSS SECTION

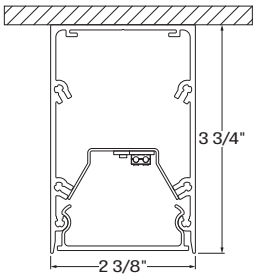

VIA2S - HLO-FH

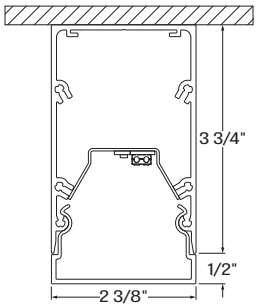

VIA2S - HLO-0.5D

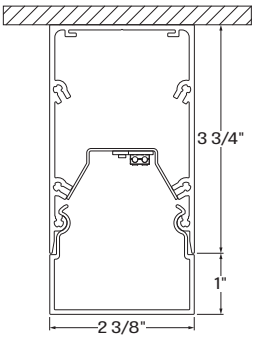

VIA2S - HLO-1.0D

www.lumenwerx.com (T) 514-225-4304 (F) 514-931-4862 © All rights are reserved to LumenWerx ULC.
LumenWerx ULC. reserves the right to change or modify product specifications without notification

C ETL US LISTED Intertek

VIA 2 LED

SURFACE

LUMENWERX
WWW.LUMENWERX.COM

Lam Partners ARCHITECTURAL LIGHTING DESIGN

PHOTOMETRICS

Please follow the multiplier tables to ensure correct lumen value. Lensing, CCT and CRI, will change the lumen output.

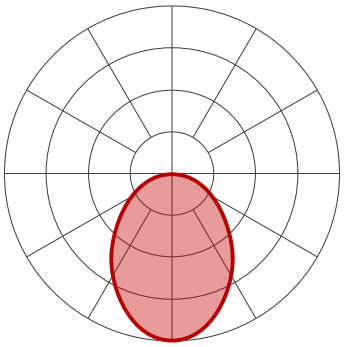

HLO-FH

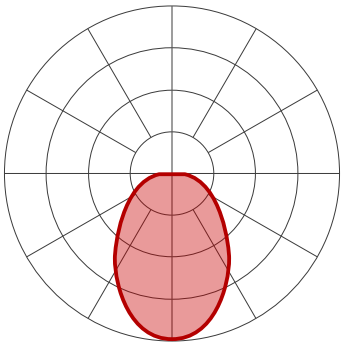

HLO-0.5D

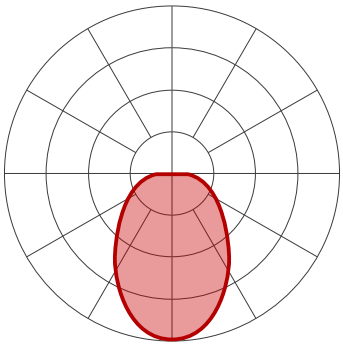

HLO-1.0D

HLO-FH Delivered Lumens for Flush at 35K 80CRI

Lumens per Foot	Total Lumens Per 4FT	Input Watts	LPW
350	1400	13.5	103
500	2000	20	101
750	3000	29.5	102

Multiplier - Drop Lens

Direct lens	Watts Multiplier	LPW Multiplier
Flush lens	1.00	1.00
Drop lens 0.5"	0.99	1.00
Drop lens 1.0"	0.95	1.05

Multiplier - CCT/CRI

CCT (K)	Watts Multiplier		LPW Multiplier	
	CRI80	CRI90	CRI80	CRI90
2700	1.05	1.26	0.95	0.79
3000	1.01	1.23	0.99	0.81
3500	1.00	1.20	1.00	0.84
4000	1.00	1.17	1.00	0.85
5000	0.90	1.09	1.11	0.92
6500	0.94	1.11	1.06	0.90

OPTICS

High Efficiency Lambertian Optic (HLO) shielding of diffusing 0.075" thick acrylic provides up to 88% transmission and good source obscuration. Matte white reflectors distribute LED output across the shielding. Luminaire brightness is controlled by the ratio of luminous flux to shielding area. HLO is available as a flush diffuser or as a drop diffuser, extending 0.5" or 1.0" below the luminaire housing. Drop diffusers are extruded with glued end caps. HLO optics have a Spacing Criteria of 1.06.

LIGHT SOURCE - LED

Custom linear array of mid-flux LED's are cartridge-mounted with quick-connect wiring to facilitate service and thermal management. Available in 3000K, 3500K and 4000K with a minimum 80 CRI and an option for 90 CRI with elevated R9 value. Color consistency maintained to within 3 SDCM. LEDs operate at reduced drive current to optimize efficacy and lumen maintenance.
All LEDs have been tested in accordance with IESNA LM-80-08 and the results have shown L80 lumen maintenance greater than 60,000 hours. Absolute product photometry is measured and presented in accordance with IESNA LM-79, unless otherwise indicated.

www.lumenwerx.com (T) 514-225-4304 (F) 514-931-4862 © All rights are reserved to LumenWerx ULC.
LumenWerx ULC. reserves the right to change or modify product specifications without notification

Intertek

VIA 2 LED

SURFACE

LUMENWERX
WWW.LUMENWERX.COM

LUMINAIRE LENGTH

Via 2 is made up of standard 2, 3, 4, 5, 8 and 12 foot sections that may be joined together to create longer continuous run lengths. Exact run length must be noted in the product code. The minimum individual section available is 2 foot.
All individual sections are joined together onsite using the joiner kits provided. LumenWerx offers joiner kits that are extremely simple to work with in the field and result in a fixture that appears virtually seamless with no light leak at any connection.

Joining system

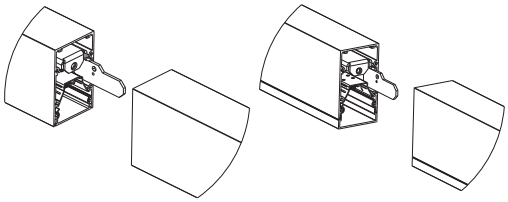

Via 2 direct

Via 2 direct with drop lens

ELECTRICAL

Factory-set, adjustable output current LED driver with universal (120-277VAC) input. Dimmable from 100% to 1% with 0-10V dimming control. Rated life (90% survivorship) of 50,000 hours at 50°C max. ambient (and 70°C max. case) temperature. At maximum driver load: Efficiency>84%, PF>0.9, THD<20%. Other specifiable options include Lutron Hi-Lume 1% (specify 2-wire, or Ecosystem Dim-to-Off), Lutron 5-Series (5% Ecosystem), DMX (RDM compatible) and DALI protocol drivers. All of our standard 0-10V drivers are NEMA 410 compliant.

EMERGENCY

Factory installed long life high temperature recyclable Ni-Cad battery pack with test switch and charge indicator, minimum of 90 minutes operation, up to 1000 lumens per 4ft (25°C) emergency lighting output. Recharge time of 24 hours.

MOUNTING OPTIONS

Fixtures can be mounted directly to T-Bar, drywall and hard surface ceilings, hardware supplied by others. Long runs require a minimum of 6" distance from the vertical wall.

FINISH

Interior - 95%, reflective matte powder coated white paint
Exterior - matte white, matte black or aluminum powder coating.
Custom finishes are also available.

CONTROLS

LumenWerx offers several options for integrating occupancy and daylight harvesting controls in our luminaires.

STANDALONE CONTROLS

An integrated standalone sensor controls the luminaire in which it is installed. Depending on the length, more than one sensor may be necessary and may control the entire luminaire, or just a section of it. These controls operate independently. Unless otherwise agreed, location and functionality of the sensor within the luminaire are selected by LumenWerx.
Three types are available:
OMS: An integral Passive InfraRed (PIR) sensor turns luminaires on and off automatically with field-adjustable time out period. No wall control is used. Coverage pattern for large motion has a 12' diameter with the sensor mounted 8' above the floor; for small motion, the pattern has an 8' diameter. Typically, one sensor is required for every 10' of a continuous luminaire run.
ODS: An integral, daylight harvesting sensor with closed-loop operation dims the luminaire in which it is installed in order to compensate for available daylight. The sensor measures the combination of daylight and luminaire light reflected from horizontal surfaces below the luminaire. Initial onsite calibration is required via the use of provided remote control.
OCS: Both an occupancy and a daylight sensor are installed in the luminaire.

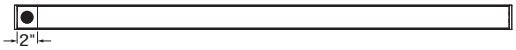

Location of an Onboard control

CONNECTED CONTROLS

With Connected Controls, sensors or nodes installed in the luminaire form part of a larger control system infrastructure from manufacturers such as: Lutron*, Enlighted, Osram ENCELIUM, Acuity nLight, Crestron and others. These connected controls allow for a scalable system providing features like occupancy and daylight control, manual control, scheduling and configuration of various zones and scenes. Energy reporting and system monitoring are also possible. Specific capabilities depend on the control system being used.

www.lumenwerx.com (T) 514-225-4304 (F) 514-931-4862 © All rights are reserved to LumenWerx ULC.
LumenWerx ULC. reserves the right to change or modify product specifications without notification
Intertek

VIA 2 LED

SURFACE

LUMENWERX
WWW.LUMENWERX.COM

LumenWerx installs the components (sensors, nodes, power packs, etc) which may be supplied to us by a third party, or procured directly by LumenWerx, depending on the control system manufacturer.
LumenWerx is solely responsible for the installation of specified components; the controls manufacturer is responsible for performance of the control system.
To indicate a LumenWerx luminaire with Connected Controls, identify the specific onsite control system to be integrated into the luminaires using the ordering code.
Due to the diversity of components, you must contact controls@lumenwerx.com to assure complete compatibility with intended control system and to fully specify the luminaire.
Complete control specifications, sensor/node/power pack layout, and narrative for the control system are required for LumenWerx to create shop drawings and submittals.
* Lumenwerx offers a Lutron Vive-Enabled fixture option using either the DFCSJ-OEM-OCC (OCS Option) or DFCSJ-OEM-RF (wireless only, no sensor) Integral Fixture Modules and a DALI or EcoSystem LED driver based on customer dimming requirements.

Please contact our controls department at controls@lumenwerx.com for further assistance.

OPTIONS

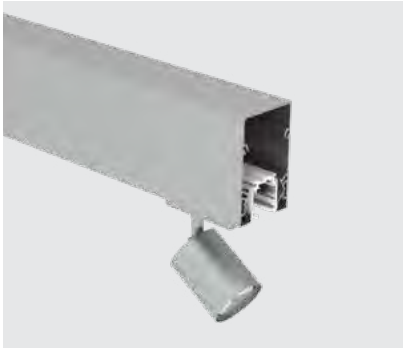

ITR - integrated track

Multiple track systems manufactured by others, are offered in Via 2, in individual, or runs, with or without LED integrated sections. Detailed specifications of the track system must be supplied. For other mounting options (please consult factory).

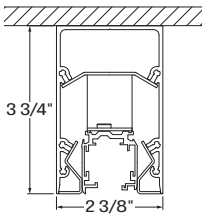

VIA2-ITR

CONSTRUCTION

Housing - Extruded Aluminum (0.095" nominal) up to 90% Recycled Content
Interior brackets - Die formed cold rolled sheet steel 18 gauge thick
Joining system - Die cast Zinc (0.95" nominal)
Reflectors - Extruded Aluminum (0.075" nominal) up to 95% reflective matte
Diffuser - 0.075" thick acrylic, 88% transmission
Drop diffuser - extruded with glued end caps.
End caps - Die cast Aluminum (0.95" nominal)

WEIGHT

Via 2 4ft - 9.03lbs - 4.1kg
Via 2 8ft - 18.28lbs - 8.3kg
Via 2 12ft - 27.97lbs - 12.7kg

CERTIFICATIONS

ETL - Rated for Indoor Dry/Damp locations. Conforms to UL Standard 1598 and certified to CAN/CSA Standard C22.2 No. 250.0.

WARRANTY

LumenWerx provides a five-year limited warranty of electrical and mechanical performance of the luminaires, including the LED boards, drivers, and auxiliary electronics. LumenWerx will repair or replace defective luminaires or components at our discretion, provided they have been installed and operated in accordance with our specifications. Other limitations apply, please refer to the full warranty on our website.

www.lumenwerx.com (T) 514-225-4304 (F) 514-931-4862 © All rights are reserved to LumenWerx ULC.
LumenWerx ULC. reserves the right to change or modify product specifications without notification
Intertek

VENUS TC 3D IP67 Static White

LED LINEAR™ lighting solution

S2

Lam Partners ARCHITECTURAL LIGHTING DESIGN

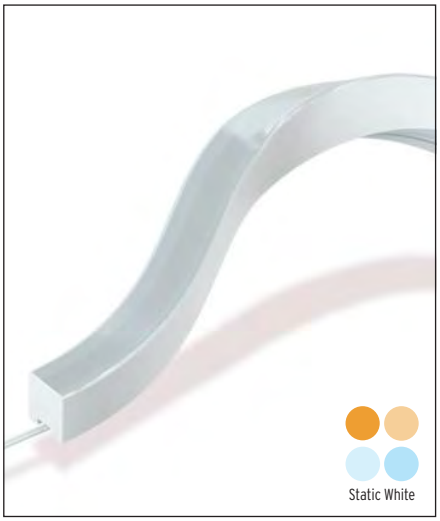

3D - Universal Bend

3D bendable IP67 flexible dot free and perfectly homogeneous linear LED light line with a 0.71" x 0.67" (W x H) cross section. Opal polyurethane encapsulation offering a premium water proof sealing, UV resistance and chemical stability. True Color technology for an optimal rendition of the LED spectrum with no color shift. Vertical and horizontal bending as well as twisting, with radius of 5.9" offering the ideal solution for organic facade geometry. Usable for accent lighting or decorative applications requiring IP67 ingress. Freely configurable in length. Backside cable feed for an optimal fixture to fixture overlap. Light source assembled using Reel to Reel (R2R) production process supporting LED Linear™ Tj Away® thin flexible circuit board technology. Outstanding lifetime of > 60,000 hrs L80/B10. Embeds high quality CSP LEDs with 3 step MacAdams (SDCM3) binning centered on target CCT (One Bin Only) with an extended photometric code of Wxxx/339 ensuring an exceptional color consistency over the rated lifetime. Premium color rendition with a CRI of 95. Consistent light intensity all along the strip length. Fully PWM dimmable. Engineered and produced in Germany.

Project name

Fixture type

Phase

Specifier

Date

Select Models Only

Intertek ETL Listed

True Color No Color Shift	**Integrated Circuit Driver** Up to 330 lm/ft 73 lm/W constant light output	**Reel-to-Reel R2R Production** High Quality Solder Free Reels	**TjAway® Thermal Management** Exceptional Thermal Dissipation
One Bin Only 3 MacAdam up to 95 CRI	**L/B Lifetime** L80/B10 >60,000 hrs	**6 Digit Photometric Code** Wxxx/339	**IES LM79/LM80** LM79/LM80 Compliant

Ordering Process

Step 1

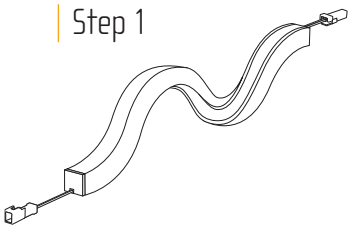

Fixture (Page 1)

Step 2

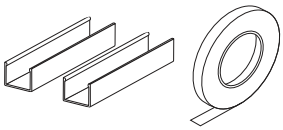

Mounting Accessories (Page 4)

Step 3

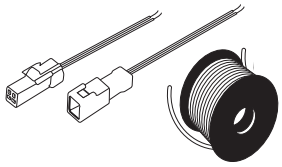

Cables and Connectors (Page 4)

Step 4

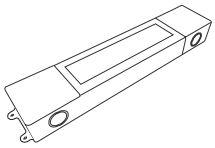

Drivers and Controllers (Page 5)

Fixture Order Code

Family	Model/Lumen package*	Variant	Color Rendering/Color Temperature	Custom length**	Ingress
VarioLED Flex	_ _ _ _ _	_ _	_ _ _ _	_ _ _ _	IP67
	VENUS TC - Low Output	3D - Universal Bend	W822 - 80CRI, 2200K	L_{min}: 494 mm (1' 7-1/2")	
	120 lm/ft		W927 - 90CRI, 2700K	L_{max}: 1964 mm (6' 5-3/8")	
	PHOBOS TC - Mid Output		W930 - 90CRI, 3000K		
	220 lm/ft		W935 - 90CRI, 3500K	Increment: 70 mm (2-3/4")	
	SKYLLA TC - High Output		W940 - 90CRI, 4000K		
	330 lm/ft		W850 - 80CRI, 5000K		

* Lumen Values represent 5000K (W850)
** Custom Length should be specified in milimeters (mm). See page 3 for all available lengths.

				Low Output		Mid Output		High Output	
			Color temperature[A]	Lumen/ft	W/ft[B]	Lumen/ft	W/ft[B]	Lumen/ft	W/ft[B]
Static White		W822	2,200 K	90	1.8	160	3	240	4.6
		W927	2,700 K	100	1.8	170	3	250	4.6
		W930	3,000 K	100	1.8	170	3	250	4.6
		W935	3,500 K	100	1.8	180	3	260	4.6
		W940	4,000 K	100	1.8	180	3	260	4.6
		W850	5,000 K	120	1.8	220	3	330	4.6

[A] CCT tolerances occur in IP67 products due to the encapsulation of the fixture.
[B] The given data are typical values. Due to tolerances of the production process and the electrical components, values for light output and electrical power can vary up to 10%.

VENUS TC 3D IP67 Static White

Mechanical Details

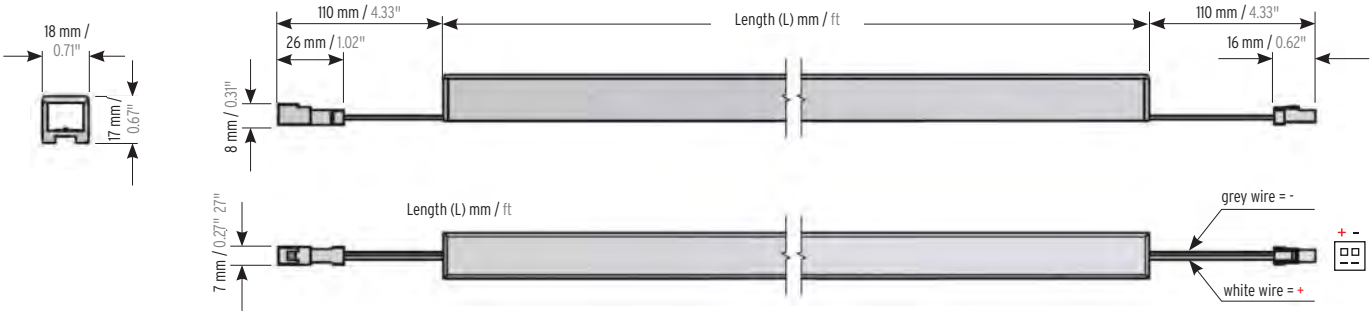

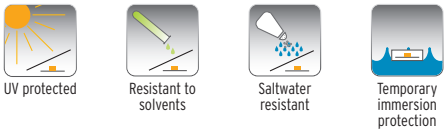



3D Version Bending Direction
R_{min} = 15 cm / 5.91"
Maximal Twist = 180° / 3.2 ft
Fixture Weight: 0.22 lbs / ft

IP67 plug in connector (male / female) on both ends. Fixtures at maximum length ships with one male connector only.

Technical Details

Voltage	24 Volt (23 V_{min}, 25 V_{max})
Case temperature[A]	Tc_{min} = -4°F / -20°C, Tc_{max} = 149°F / 65°C
Storage temperature	Ts_{min} = -22°F / -30°C, Ts_{max} = 185°F / 85°C
Ambient temperature	Ta_{min} = -4°F / -20°C, Ta_{max} = specific, see Table below

[A] The position of the Tc-point is marked on each step of the LED strip. The Tc-point should be measured in thermal equilibrium according to IEC EN 60598-1.

	Low Output	Mid Output	High Output
Power (W/ft)[B]	1.8	3	4.6
Efficacy (lm / W)[B] @ W850	68	71	73
CRI / R9 @ 3000 K	95 / 65	95 / 65	95 / 65
R_f / R_g @ 3000 K	95 / 100	95 / 100	95 / 100
Max fixture length (ft / m)	6.3 / 2	6.3 / 2	6.3 / 2
Max serial run length (ft / m)[B]	16.4 / 5	13.1 / 4	9.2 / 3
Temperature Tc-point (Tc_{max})[C]	149°F / 65°C	149°F / 65°C	149°F / 65°C
Max ambient temperature (Ta_{max})	122°F / 50°C	122°F / 50°C	104°F / 40°C

[B] With supply voltage > 23.5 V

[C] The given data are typical values. Due to tolerances of the production process and the electrical components, values for light output and electrical power can vary up to 10%.

Light Distribution

VENUS TC 3D IP67 - Static White

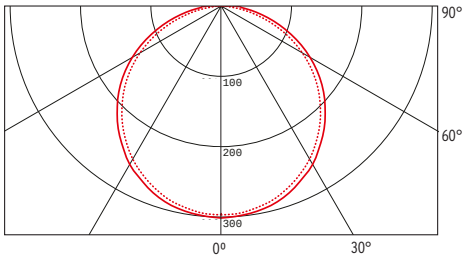

VENUS TC 3D IP67 Static White

Colorimetric Details – Venus TC 3D IP67

Photometric Code	CCT	R_a / CRI	R9	TM-30-15 / R_f	TM-30-15 / R_g
W940	4000 K	91	77	91	101

Color Vector Graphic



Color Distortion Graphic



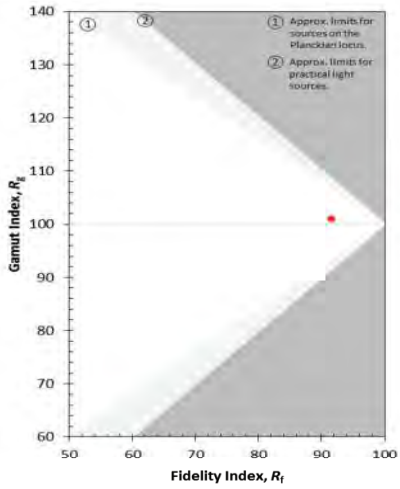

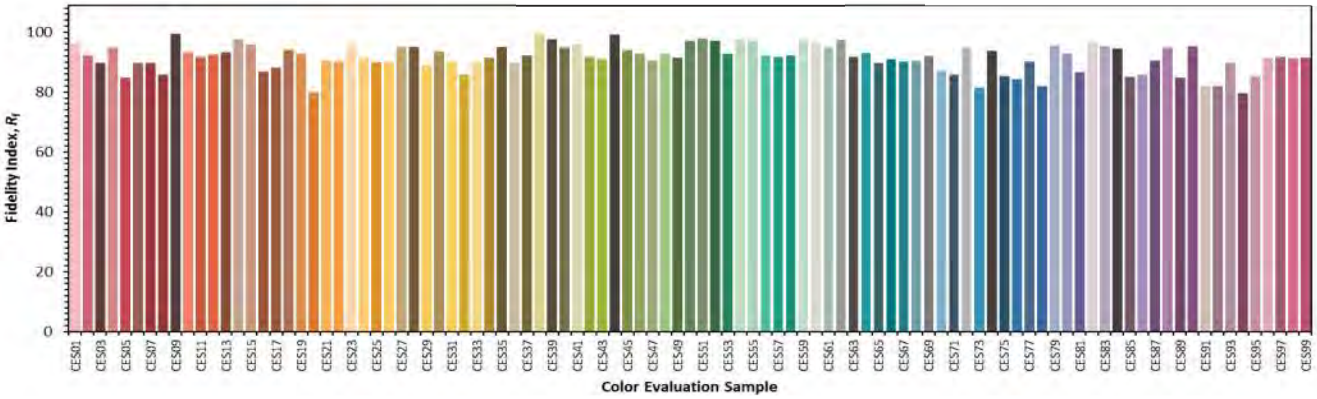

LENGTH CHART - Venus TC 3D IP67

Fixture length (Ships UPS freight allowed on orders >5k)		Static White					
		Low Output 1.8 Watts/Ft		Medium Output 3.1 Watts/Ft		High Output 4.6 Watts/Ft	
inches	mm	Watts/fixture	Lumens/fixture @W930K	Watts/fixture	Lumens/fixture @W930K	Watts /fixture	Lumens / fixture @W830K
19.45	494	3	162	5	275	7	421
22.20	564	3	185	6	314	9	481
24.96	634	4	208	6	354	10	541
27.72	704	4	231	7	393	11	600
30.47	774	5	254	8	432	12	660
33.23	844	5	277	8	471	13	720
35.98	914	5	300	9	510	14	779
38.74	984	6	323	10	549	15	839
41.50	1054	6	346	10	588	16	899
44.25	1124	7	369	11	627	17	959
47.01	1194	7	392	12	666	18	1018
49.76	1264	7	415	12	705	19	1078
52.52	1334	8	438	13	744	20	1138
55.28	1404	8	461	14	783	21	1197
58.03	1474	9	483	15	822	22	1257
60.79	1544	9	506	15	861	23	1317
63.54	1614	10	529	16	900	24	1376
66.30	1684	10	552	17	939	25	1436
69.05	1754	10	575	17	978	26	1496
71.81	1824	11	598	18	1017	28	1556
74.57	1894	11	621	19	1056	29	1615
77.32	1964	12	644	19	1095	30	1675

Mounting Accessories

	Item	Description	Dimensions (L x W x H)	Order Code
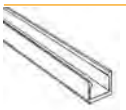	Low Surface Mounting Clip & Channel	Aluminum, surface mounting accessories. Available as 1" short clips, 6.5' and 13' long continuous mounting channel. Clips are recommended to use at most 12 inches apart. White finish.	1-1/4" x 7/8" x 6/8" 6' 6" x 7/8" x 6/8" 13' x'7/8" x 6/8"	13000277 10000552 10000552-4M
	High Surface Mounting Clip & Channel	Aluminum, surface mounting accessories with cable raceway underneath. Available as 1" short clips, 6.5' and 13' continuous mounting channel. Clips are recommended to use at most 12 inches apart. White finish.	1-1/4" x 7/8" x 1" 6' 6" x 7/8" x 1" 13' x 7/8" x 1"	13000278 10000553 10000553-4M
	Clear Surface Holding Clamp	Surface mounting clamp, fix to the surface with screws. UV stable transparent plastic material. Recommended to use at most every 18 inches. White finish.	5/8" x 2" x 3/4"	13000279
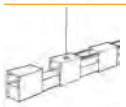	Flexible Pendant Mounting System	Aluminum segmented system for curvatures, pendant set needed every three feet. White finish.	6' 6" x 7/8" x 1"	10000554
	Pendant Set	Steel aircraft cable, available in two lengths. At least 2 pendant sets per 3' are required for flexible pendant channel (1000554).	6' 1/2" cable length 16' 3/8" cable length	13000273 13000274
	Recessed Mounting Channel	Aluminum recessed mounting channel with pre-mounted mounting springs and decorative cover strips. Available as 6.5' and 13' lengths. White finish.	6' 6" x 1-1/2" x 1-3/4" 13' x 1-1/2" x 1-3/4"	10000559 10000559-4M
	Flexible Recessed Mounting System	Flexible recessed mounting system with pre-mounted mounting springs and decorative cover strips. Use to create curved installations. White finish.	6' 6" x 1-1/2" x 1-3/4"	10000560
	End Caps	End cap set (2 pieces) for recessed mounting channel. White finish.	7/8" x 1-3/8" x 1-7/8"	11000214
	Adhesive Tape for Surface Mounting	High quality adhesive tape, use to install the product on glossy or rough surfaces.	164' x 3/4"	18200135

Cables and Connectors

	Item	Description	Model	Dimensions	Order Code
	Cable IP68 for Static White	Outdoor rated UL approved cable. Use to extend installation distance with outdoor rated splicing box (by others).	Static White	2 x 22 AWG, 160 ft	14000030
	Mini Female Connector IP67 for Static White	Use to run cable from the driver to the first fixture of the run or to the next fixture. Female mini connector on one side and open end cable on the other side.	Static White Static White	2 x 22 Awg, 8 in 2 x 22 Awg, 6.5 ft	15000141 15000142
	Mini Male Connector IP67 for Static White	Use to run cable from the fixture to the driver or to the previous fixture. Male mini connector on one side and open end cable on the other side.	Static White	2 x 22 Awg, 8 in	15000140
	Mini Extension IP67 for Static White	Use to extend the distance between connection points. Female connector on one side and male connector on the other side.	Static White Static White	2 x 22 Awg, 4 in 2 x 22 Awg, 6.5 ft	15000143 15000144
	Mini Female Protection Cap IP67 for Static White	Use to seal unused connectors and maintain IP67 ingress protection.	Static White	—	15000218

Drivers

Item		Specifications	Downloads
LED LINEAR™ Non-Dimmable Drivers		• UL 8750 Listed Enclosure - With Built-In Junction Boxes • Universal Input Voltage 120V - 277V • IP65 - For Both Indoor and Outdoor Use • No Minimum Load Requirement • 24V Constant Voltage Output, Class 2 • Available in three wattages 30W, 60W and 96W • Max. Dimensions: 12-1/8" x 2-3/8" x 1-3/8"	30 W SPEC SHEET 60 W SPEC SHEET 96 W SPEC SHEET INSTALLATION INSTRUCTIONS
LED LINEAR™ 0-10V Dimmable Drivers		• UL 8750 Listed Enclosure - With Built-In Junction Boxes • 0-10V Dimmable - Flicker Free Down to 1% • Universal Input Voltage 120V - 277V • IP65 - For Both Indoor and Outdoor Use • 24V Constant Voltage Output, Class 2, Class P • Available in three wattages 30W, 60W and 96W • Max. Dimensions: 12-1/8" x 2-3/8" x 1-3/8"	30 W SPEC SHEET 60 W SPEC SHEET 96 W SPEC SHEET INSTALLATION INSTRUCTIONS
LED LINEAR™ ELV/Triac Dimmable Drivers		• UL 8750 Listed Class 2 Enclosure • 24V constant voltage output • Compact size yet high efficiency and performance in dry and damp environments (IP67) • Multiple Inputs: 120V or 277V • Fully dimmable: ELV Dimmers - Reverse or Adaptive Phase Control, Trailing Edge • Available in two wattages 48W and 96W • Multiple Circuits are available up to 4 units (up to 384W)	48 W SPEC SHEET 96 W SPEC SHEET INSTALLATION INSTRUCTIONS
MEAN WELL PWM Dimmable Drivers		• Universal AC input / Full range (up to 305VAC) • Constant voltage PWM style output • Built-in 3 in 1 dimming function (0~10Vdc or PWM signal or resistance) • Dimming range : 0~100% • Class 2 power unit • Suitable for dry / damp / wet locations • UL Recognized component, 5 years warranty	40 W SPEC SHEET 60 W SPEC SHEET 90 W SPEC SHEET INSTALLATION INSTRUCTIONS
LUTRON Dimmable Drivers		• UL Listed Enclosure • Dimming Range: 100% to 1% and 0.1% (Premiere) • LED lighting turns on to any dimmed level without flashing to full brightness • Operating Voltage: 120V~ to 277V~ at 50/60 Hz • Rated lifetime of 50,000 hours at 40°C (104°F) ambient temperature and maximum loading • For rated warranty, ambient temperature not to exceed 40°C (104°F) • Open-circuit protected output	HI-LUME SPEC SHEET HI-LUME PREMIERE SPEC SHEET INSTALLATION INSTRUCTIONS
eldoLED DALI/DMX Dimmable Drivers		• Available in linear or rectangular format • 100W, DMX/DALI interface • 4 control channels • 24V constant voltage, 4 x 24V outputs • Metal or plastic case options	100 W SPEC SHEET INSTALLATION INSTRUCTIONS

Controllers

Item		Specifications	Downloads
eldoLED Controllers	 	**180/D** DMX Controller for RGB and Tunable White Applications **210/D** Dali Contoller for Static White, RGB and Tunable White Aplications **211/D-LG** 0-10V Logarithmic Dimming Controller **211/D-LN** 0-10V Linear Dimming Controller **212/D** DMX Controller for Static White and Static Color Applications **DimWheel** DMX Wall Controller for RGB and Tunable White Applications	180/D SPEC SHEET 210/D SPEC SHEET 211/D-LG SPEC SHEET 211/D-LN SPEC SHEET 212/D SPEC SHEET DIM WHEEL SPEC SHEET

Click for more information

PRODUCT BROCHURE | INSTALLATION | IES FILES | DRIVERS & CONTROLS

LED LINEAR TECHNOLOGY | VOLTAGE DROP CALCULATOR

YG1

Lam Partners
ARCHITECTURAL LIGHTING DESIGN

Pole top luminaires
with asymmetrical wide spread light distribution

Type:
BEGA Product:
Project:
Voltage:
Color:
Options:
Modified:

Housing/fitter: Heavy one piece die-cast aluminum (minimum .125" thick) with specular anodized aluminum reflector. Slip fitter and arm extensions are die-cast aluminum secured by six (6) socket head stainless steel set screws threaded into stainless steel inserts. Pole extension is extruded aluminum with a die-cast aluminum cap. Slip fits 3" O.D. pole top or tenon. Die castings are marine grade, copper free (≤ 0.3% copper content) A360.0 aluminum alloy.

Enclosure: One piece die-cast aluminum, hinged, trim frame with ¼" thick tempered glass, silicone sealed to trim. Tool-less entry for maintenance. Fully gasketed for weather tight operation for downlighting only.

Electrical: 23.6 W LED luminaire, 28 total system watts -30° C start temperature. Integral 120 V through 277 V electronic LED driver, 0-10V dimming. Standard LED color temperature is 4000K with a >80 CRI. Available in 3000K (>80 CRI); add suffix K3 to order.
Note: Due to the dynamic nature of LED technology, LED luminaire data on this sheet is subject to change at the discretion of BEGA-US. For the most current technical data, please refer to www.bega-us.com.

Finish: All BEGA standard finishes are polyester powder coat with minimum 3 mil thickness. These luminaires are available in four standard BEGA colors: Black (BLK); White (WHT); Bronze (BRZ); Silver (SLV). To specify, add appropriate suffix to catalog number. Custom colors supplied on special order.

UL listed for US and Canadian Standards, suitable for wet locations. Protection class: IP66.

Weight: 29.0 lbs.

EPA (Effective projection area): 1.4 sq. ft.

Luminaire Lumens: 3385

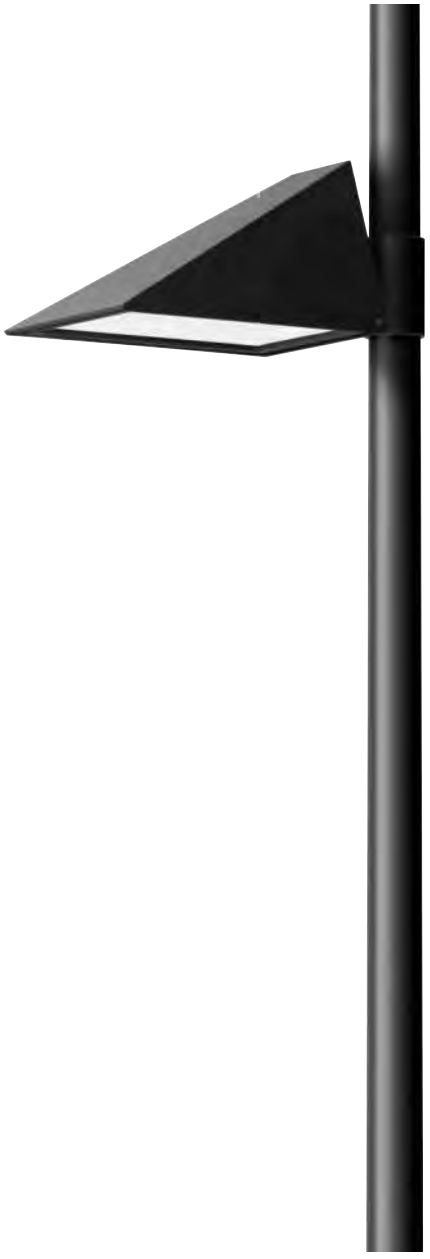

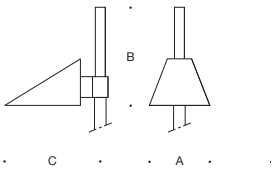

Single pole-top luminaires

	Lamp	LEED	A	B	C
77 930	23.6 W LED	LZ-1	13 ¾	23	23 ⅝

Recommended for use with 14' to 18' poles.

BEGA 1000 BEGA Way, Carpinteria, CA 93013 (805) 684-0533 FAX (805) 566-9474 www.bega-us.com
©copyright BEGA 2019 Updated 01/16/2019

YG2_YG6

Lam Partners ARCHITECTURAL LIGHTING DESIGN

HELIO™ BOLLARD

PRODUCT OVERVIEW

Helio Bollards bring an elegant simplicity to public spaces of all kinds. Constructed of stainless steel, fixtures are available in illuminated and non-illumanted variations. Illuminated bollards feature a frosted acrylic lens, 180˚ or 360˚ light distribution variations, and Cree® LEDs in 3000K warm white and 4000K natural.



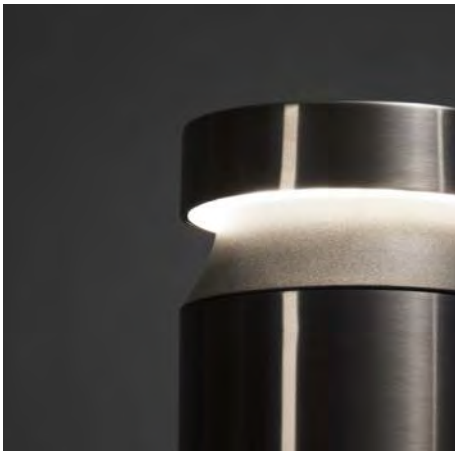

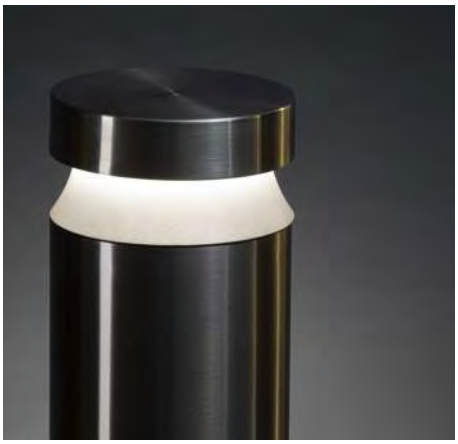

PRODUCT DETAILS

MATERIALS, FINISHES, & DIMENSIONS

- Illuminated bollards have a tubular stainless steel column, frosted acrylic lens, and a stainless steel cap.
- Non-Illuminated bollards are tubular stainless steel with welded stainless steel cap.
- Standard stainless steel finish is Satin.
- For optional powdercoat colors see the Forms+Surfaces Powdercoat Chart. Custom RAL colors are available for an upcharge.
- Bollard dimensions are 41" high x 6" diameter.

LED LIGHT ENGINE & DRIVER

- Custom LED light engine with Cree® LEDs.
- 3000K warm white and 4000K natural white color temperatures.
- 700 lumen output.
- Less than 5% upward lumen output.
- LED driver input voltage is 120-227VAC nominal.
- Maximum LED driver input current is 0.40A.
- Driver has 0-10V dimming capabilities.
- 180˚ and 360˚ light distribution options are available.

INSTALLATION & MAINTENANCE

INSTALLATION

- Standard mounting is surface mount.
- Security options are available.

MAINTENANCE

- Metal surfaces can be cleaned as needed using a soft cloth or brush with warm water and a mild detergent. Avoid abrasive cleaners.

T 800.451.0410 | www.forms-surfaces.com

FORMS+SURFACES®

© 2019 Forms+Surfaces® | All dimensions are nominal. Specifications and pricing subject to change without notice. For the most current version of this document, please refer to our website at www.forms-surfaces.com.

ERCO

Tesis In-ground luminaire

Uplight

YG3

Lam Partners ARCHITECTURAL LIGHTING DESIGN



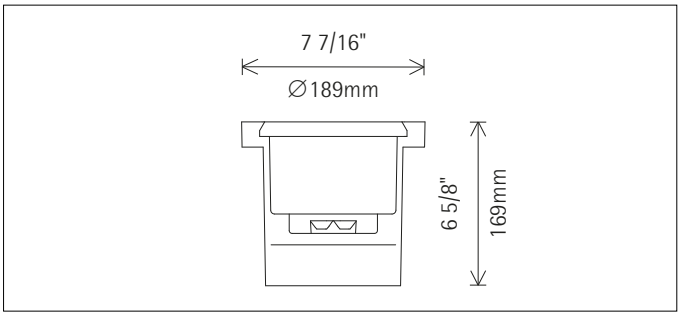

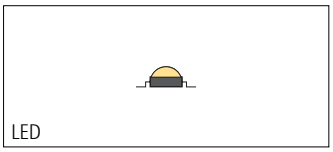

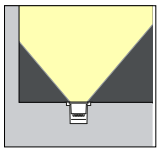

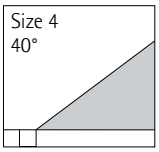

35069.023
LED 12W 1260lm 3000K warm white
0-10V dimmable
Version 9
Flush mounting detail
Spherolit lens, wide flood

Product description
Housing: polymer, black.
Control gear 120V/277V, 60Hz, dimmable. Longitudinally watertight cable 5xAWG14, L 31 1/2" / 800mm.
LED module: high-power LEDs on metal-core PCB. Collimating lens made of optical polymer.
Reflector: aluminum, black lacquered.
Optical cut-off 40° from horizontal.
Screw-fastened cover ring with flush safety glass: stainless steel. Safety glass: 9/16" / 15mm, clear.
Installation with separate connection sleeve.
Mounting in recessed housing: can be driven over in vehicles with pneumatic tyres. Load 4500lb.wt / 20kN.
Dimming with external dimmers possible (0-10V).
Suitable for wet location (IP68): dust-proof.
Weight 5.07lbs / 2.30kg
Version with 3000K CRI 95 or 2700K, 3500K, 4000K CRI 92 available on request.

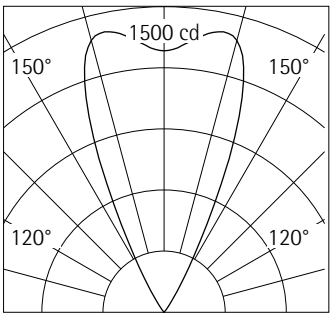

h(ft)	E(fc)	D
		49°
15	6	13'8"
12	9	10'11"
9	16	8'2"
6	36	5'6"
3	143	2'9"

Technical data

Luminous flux of the luminaire	824lm
Connected load	16.0W
Luminaire efficacy	51lm/W
Color deviation	1.5 SDCM
Color rendition index	CRI 92
Lumen maintenance (LED manufacturer specifications)	L90/B10 ≤50000h L90 ≤100000h
LED failure rate	0.1% ≤50000h
LMF	E
Temperature on the cover glass	113°F / 45°C

For your regional contact in the ERCO Sales network click here
www.erco.com/contact

Technical region: 120V/60Hz, 277V/60Hz
We reserve the right to make technical and design changes.
Edition: 20.02.2019
Current version under
www.erco.com/35069.023

© ERCO GmbH 2019

Tesis In-ground luminaire

Planning data

Cleaning (a)	1				2				3			
Ambient conditions	P	C	N	D	P	C	N	D	P	C	N	D
LMF	0.96	0.94	0.90	0.86	0.93	0.91	0.86	0.81	0.92	0.90	0.84	0.79
RSMF	0.91	0.83	0.68	0.51	0.90	0.81	0.67	0.50	0.90	0.81	0.67	0.50

Hours of operation (h)	1000	5000	10000	20000	30000	40000	50000
LLMF	1.00	0.99	0.98	0.96	0.94	0.92	0.90
LSF	1	1	1	1	1	1	1

MF	LMFxRSMFxLLMFxLSF
MF	Maintenance Factor
LMF	Luminaire Maintenance Factor
RSMF	Room Surface Maintenance Factor
LLMF	Lamp Lumens Maintenance Factor
LSF	Lamp Survival Factor
P	Room pure
C	Room clean
N	Room normal
D	Room dirty

Technical data based on international standards and directives

IEC 60598	Luminaires – Parts 1 + 2: General requirements, particular requirements and tests
IEC 62031	LED modules for general lighting – Safety specifications
IEC 62471	Photobiological safety of lamps and lamp systems
UL 1598	Luminaires
UL 1574	Standard for Track Lighting Systems
UL 8750	Standard for Light Emitting Diode (LED) Equipment for Use in Lighting Products
IES LM-79-08	Electrical and Photometric Measurements of Solid-State Lighting Products
IES LM-80-08	Measuring Lumen Maintenance of LED Light Sources
CIE 13	Method of measuring and specifying color rendering properties of light sources

All technical data are subject to industry standard tolerances.
See also www.erco.com/erco-led

Tesis In-ground luminaire

Accessories



33958.023
Connection sleeve
for cable diameters of 0.25" - 0.80".
Polymer conduit, two-part PUR cast resin.
Length 5 15/16" / 150mm.
Width 1 1/4" / 32mm.
Height 2 3/8" / 59mm.
Weight 0.99lbs / 0.45kg



33299.000
Recessed housing
Polymer, black.
4 cable entries.
Load 4500lb.wt / 20kN.
Weight 2.65lbs / 1.20kg

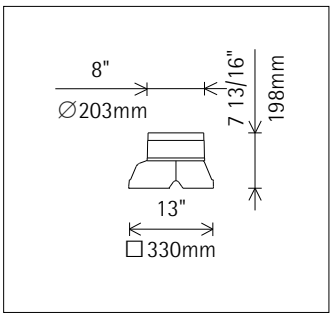

ERCO

Tesis In-ground luminaire

Directional luminaire

YG3A

Lam Partners ARCHITECTURAL LIGHTING DESIGN



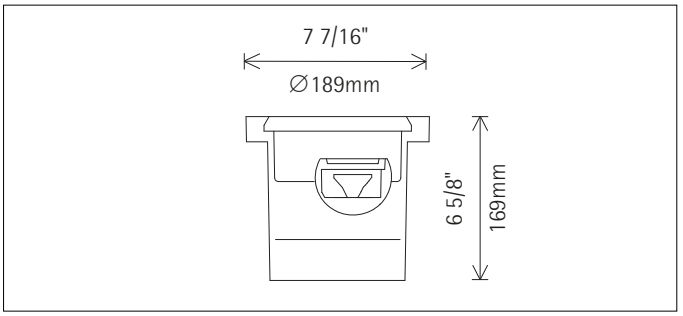

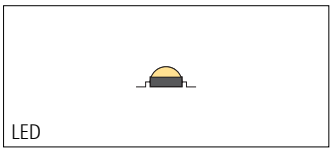

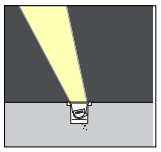

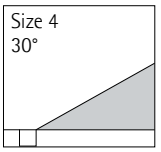

35077.023
LED 6W 630lm 3000K warm white
0-10V dimmable
Version 9
Flush mounting detail
Spherolit lens, spot

Product description
Housing: polymer, black.
Control gear 120V/277V, 60Hz, dimmable. Longitudinally watertight cable 5xAWG14, L 31 1/2" / 800mm.
LED module: high-power LEDs on metal-core PCB. Collimating lens made of optical polymer. 0-30° tiltable, rotatable through 360°.
Reflector: aluminum, black lacquered. Optical cut-off 30° from horizontal.
Screw-fastened cover ring with flush safety glass: stainless steel. Safety glass: 9/16" / 15mm, clear.
Installation with separate connection sleeve.
Mounting in recessed housing: can be driven over in vehicles with pneumatic tyres. Load 4500lb.wt / 20kN.
Dimming with external dimmers possible (0-10V).
Suitable for wet location (IP68): dustproof.
Weight 5.07lbs / 2.30kg
Version with 3000K CRI 95 or 2700K, 3500K, 4000K CRI 92 available on request.

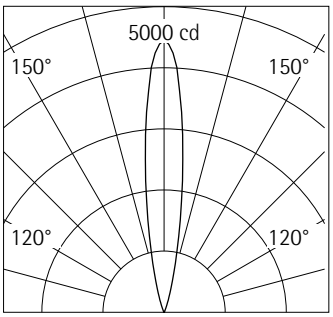

h(ft)	E(fc)	D 16°
15	20	4'3"
12	31	3'4"
9	55	2'6"
6	124	1'8"
3	494	0'10"

Technical data

Luminous flux of the luminaire	465lm
Connected load	8.2W
Luminaire efficacy	57lm/W
Color deviation	1.5 SDCM
Color rendition index	CRI 92
Lumen maintenance (LED manufacturer specifications)	L90/B10 ≤50000h L90 ≤100000h
LED failure rate	0.1% ≤50000h
LMF	E
Temperature on the cover glass	93°F / 34°C

For your regional contact in the ERCO Sales network click here
www.erco.com/contact

Technical region: 120V/60Hz, 277V/60Hz
We reserve the right to make technical and design changes.
Edition: 20.02.2019
Current version under
www.erco.com/35077.023

© ERCO GmbH 2019

Tesis In-ground luminaire

Planning data

Cleaning (a)	1				2				3			
Ambient conditions	P	C	N	D	P	C	N	D	P	C	N	D
LMF	0.96	0.94	0.90	0.86	0.93	0.91	0.86	0.81	0.92	0.90	0.84	0.79
RSMF	0.91	0.83	0.68	0.51	0.90	0.81	0.67	0.50	0.90	0.81	0.67	0.50

Hours of operation (h)	1000	5000	10000	20000	30000	40000	50000
LLMF	1.00	0.99	0.98	0.96	0.94	0.92	0.90
LSF	1	1	1	1	1	1	1

MF	LMFxRSMFxLLMFxLSF
MF	Maintenance Factor
LMF	Luminaire Maintenance Factor
RSMF	Room Surface Maintenance Factor
LLMF	Lamp Lumens Maintenance Factor
LSF	Lamp Survival Factor
P	Room pure
C	Room clean
N	Room normal
D	Room dirty

Technical data based on international standards and directives

IEC 60598	Luminaires – Parts 1 + 2: General requirements, particular requirements and tests
IEC 62031	LED modules for general lighting – Safety specifications
IEC 62471	Photobiological safety of lamps and lamp systems
UL 1598	Luminaires
UL 1574	Standard for Track Lighting Systems
UL 8750	Standard for Light Emitting Diode (LED) Equipment for Use in Lighting Products
IES LM-79-08	Electrical and Photometric Measurements of Solid-State Lighting Products
IES LM-80-08	Measuring Lumen Maintenance of LED Light Sources
CIE 13	Method of measuring and specifying color rendering properties of light sources

All technical data are subject to industry standard tolerances.
See also www.erco.com/erco-led

Tesis In-ground luminaire

Accessories



33958.023
Connection sleeve
for cable diameters of 0.25" - 0.80".
Polymer conduit, two-part PUR cast resin.
Length 5 15/16" / 150mm.
Width 1 1/4" / 32mm.
Height 2 3/8" / 59mm.
Weight 0.99lbs / 0.45kg



33299.000
Recessed housing
Polymer, black.
4 cable entries.
Load 4500lb.wt / 20kN.
Weight 2.65lbs / 1.20kg

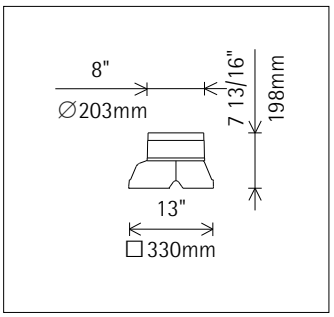

YG7

Lam Partners ARCHITECTURAL LIGHTING DESIGN

Bol 8' – 24' Round Tapered and Straight Wood Poles

FIXTURE TYPE: _____

PROJECT NAME: _____



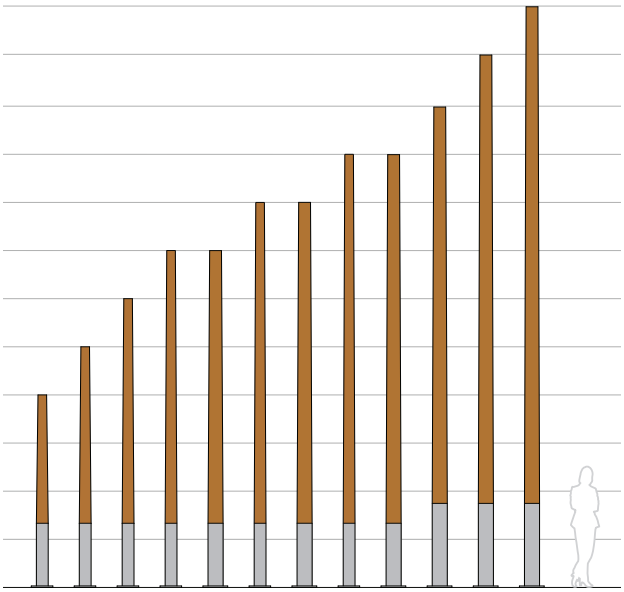

Round Taper



Glulam solid wood and aluminum pole available in 8' – 24' lengths. Tenon adapters, slip fitters and side bracket mounts are available for luminaire mounting.

FEATURES:

- Round extruded aluminum pole base with flush handhole cover held with countersunk stainless steel fasteners.
- Tapered, round, solid glulam wood pole



SPECIFICATIONS:

HOUSING: Solid wood pole is assembled through glulam construction and precision machined using CNC technology. An electrical raceway is provided in the pole's center for wiring. Laminations measure no more than 2" in thickness. Adhesive complies with ASTM D-2559 glulam construction specifications for extreme exposed weather conditions, is waterproof and rated for wet or dry use exposure.

Glulam wood shaft is fastened to aluminum pole base welded to a 3/4" thick aluminum anchor bolt base. Anchor bolt kit includes (4) 3/4" hot dip galvanized anchor bolts and fasteners and ridged concrete pour template.

FIXTURE MOUNTING: Fixtures mount either by 2 3/8", 2 7/8", 3 1/2", or 4" diameter by 4" tall tenon or drill mount for arm brackets. Consult factory for other tenon sizes. Luminaires shall be provided by others.

ELECTRICAL: A 5/16" – 18 grounding point is provided on the aluminum pole base. Wireway access is provided through a NEC compliant handhole with a flush, gasketed cover plate.

FINISHES AND MATERIALS: Woods are finished with a low VOC waterborne matte exterior finish containing UV and mildew inhibitors. All aluminum parts are polyester powder coat painted.

HARDWARE: Fasteners are stainless steel. Anchor bolt kits are hot dip galvanized.

© 2017 STRUCTURA INC.

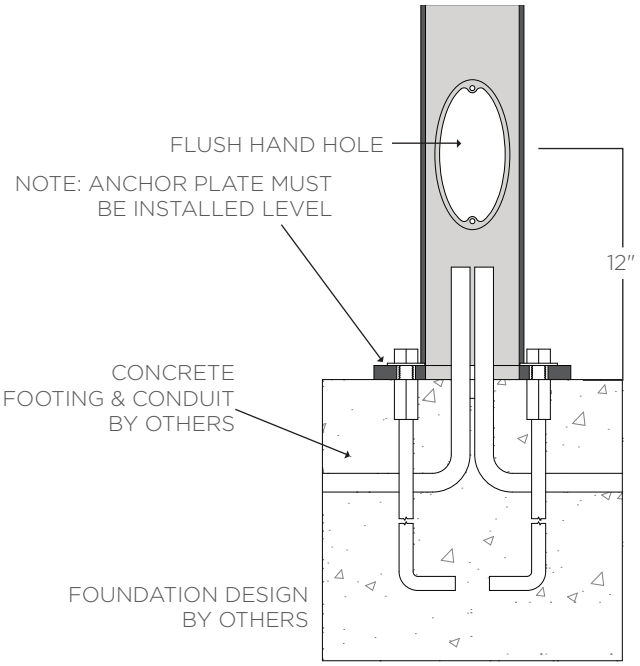

	Bolt Circle	Conduit Opening
5.5" Base	8.5" dia	5" dia.
7.0" Base	11" dia.	6.5" dia.

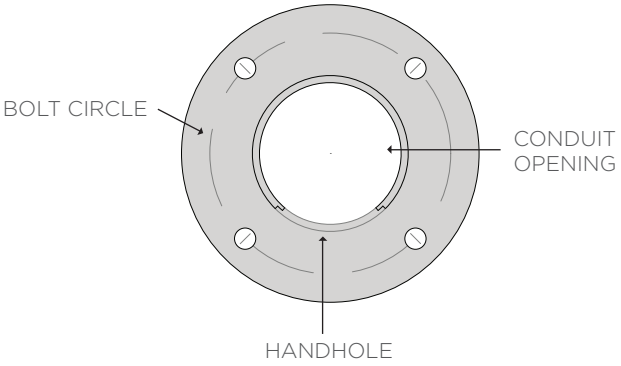

ORDERING GUIDE: EXAMPLE: BOL-S-12-55-55-S3-C6-T3124-STD

The mark of responsible forestry
FSC® C102326

BOL								
1	2	3	4	5	6	7	8	9

1 Series

BOL	Bol

2 Shaft Shape

T	Round Tapered
S	Round Straight

3 Height

8	8′
10	10′
12	12′
14	14′
16	16′
18	18′
20	20′
22	22′
24	24′

4 Base Diameter

55	5.5" – 20′ Maximum Height
70	7.0" – 24′ Maximum Height

5 Top Diameter

40	4.0"
55	5.5"
70	7.0"

6 Wood Finish

S*	See color options on finishes technical sheet

7 Metal Finish

C*	See color options on finishes technical sheet
CSM	Custom Color

8 Fixture Mounting

Tenon

T2384	2 3/8" x 4" Tenon
T2784	2 7/8" x 4" Tenon
T3124	3 1/2" x 4" Tenon
T4004	4" x 4" Tenon
TXXX	Specify diameter and height

Drill

D1	1 @ 90deg
D2	2 @ 180deg
D3	2 @ 90deg
D4	3 @ 90deg
D5	4 @ 90deg

9 Special

STD	Standard
MOD	Modified

© 2017 STRUCTURA INC

YG7

Lam Partners
ARCHITECTURAL LIGHTING DESIGN

Bol – RSQ 8' – 24' Round Tapered to Square Pole

FIXTURE TYPE: _____

PROJECT NAME: _____

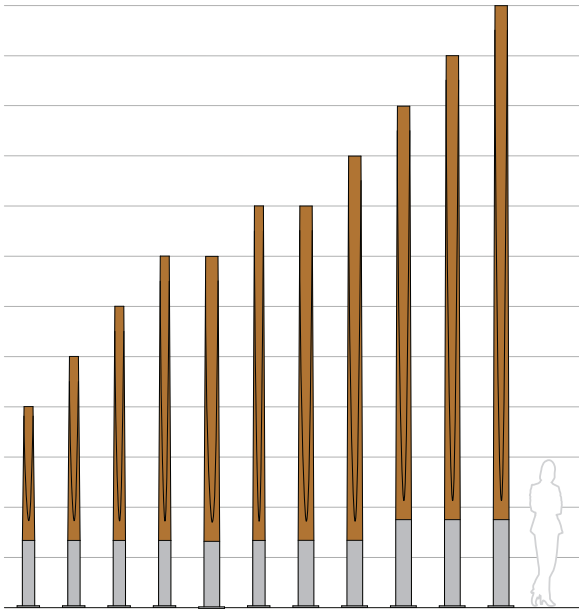

Round Tapered to Square

Glulam solid wood and aluminum pole available in 8' – 24' lengths. Tenon adapters, slip fitters and side bracket mounts are available for luminaire mounting.

FEATURES:

- Unique CNC machined, round cross section at the base tapering to square cross section at the pole's top.
- Solid glulam wood construction.
- Round extruded aluminum pole base with flush handhole cover held with countersunk stainless steel fasteners.





SPECIFICATIONS:

HOUSING: Solid wood pole is assembled through glulam construction and precision machined using CNC technology. The pole's cross section begins round at the base and tapers to a square cross section at the top. An electrical raceway is provided in the pole's center for wiring. Laminations measure no more than 2" in thickness. Adhesive complies with ASTM D-2559 glulam construction specifications for extreme exposed weather conditions, is waterproof and rated for wet or dry use exposure.

Glulam wood shaft is fastened to aluminum pole base welded to a 3/4" thick aluminum anchor bolt base. Anchor bolt kit includes (4) 3/4" hot dip galvanized anchor bolts and fasteners and ridged concrete pour template.

FIXTURE MOUNTING: Fixtures mount either by 2 3/8", 2 7/8", 3 1/2", or 4" diameter by 4" tall tenon or drill mount for arm brackets. Consult factory for other tenon sizes. Luminaires shall be provided by others.

ELECTRICAL: A 5/16" – 18 grounding point is provided on the aluminum pole base. Wireway access is provided through a NEC compliant handhole with a flush, gasketed cover plate.

FINISHES AND MATERIALS: Woods are finished with a low VOC waterborne matte exterior finish containing UV and mildew inhibitors. All aluminum parts are polyester powder coat painted.

HARDWARE: Fasteners are stainless steel. Anchor bolt kits are hot dip galvanized.

© 2017 STRUCTURA INC.

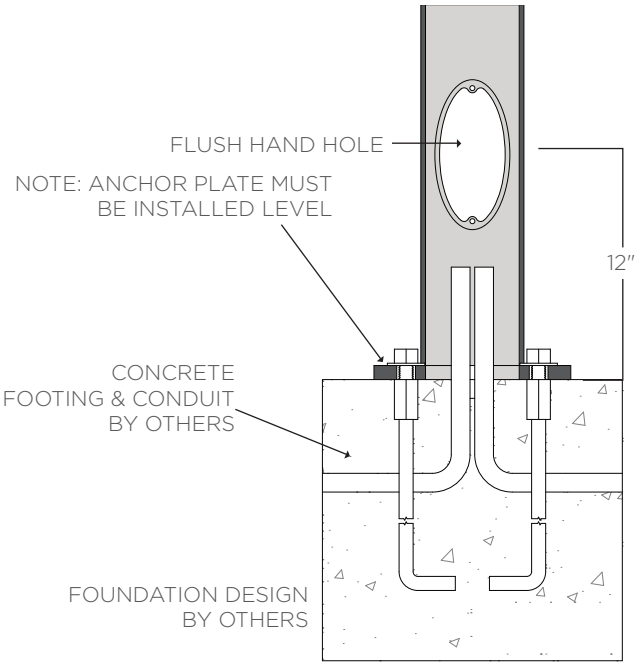

	Bolt Circle	Conduit Opening
5.5" Base	8.5" dia	5" dia.
7.0" Base	11" dia.	6.5" dia.

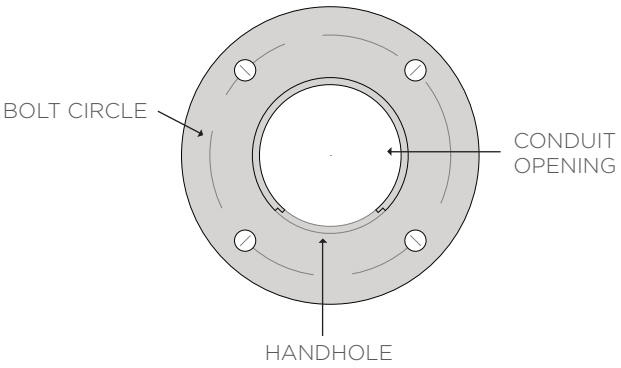

ORDERING GUIDE: EXAMPLE: BOL-RSQ-16-55-40-S4-C7-D2-STD

The mark of responsible forestry
FSC® C102326

BOL	RSQ			40				
1	2	3	4	5	6	7	8	9

1 Series
BOL — Bol

2 Shaft Shape
RSQ — Round Tapered to Square

3 Height
8 8′
10 10′
12 12′
14 14′
16 16′
18 18′
20 20′
22 22′
24 24′

4 Base Diameter
55 5.5" – 16′ Maximum Height
70 7.0" – 24′ Maximum Height

5 Top Width
40 4.0"

6 Wood Finish
S* See color options on finishes technical sheet

7 Metal Finish
C* See color options on finishes technical sheet
CSM Custom Color

8 Fixture Mounting
Tenon
T2384 2 3/8" x 4" Tenon
T2784 2 7/8" x 4" Tenon
T3124 3 1/2" x 4" Tenon
T4004 4" x 4" Tenon
TXXX Specify diameter and height

Drill
D1 1 @ 90deg
D2 2 @ 180deg
D3 2 @ 90deg
D4 3 @ 90deg
D5 4 @ 90deg

9 Special
STD Standard
MOD Modified

© 2017 STRUCTURA INC

YG7

Lam Partners
ARCHITECTURAL LIGHTING DESIGN

Bol – REV Custom Reverse Taper Pole

FIXTURE TYPE: _____

PROJECT NAME: _____

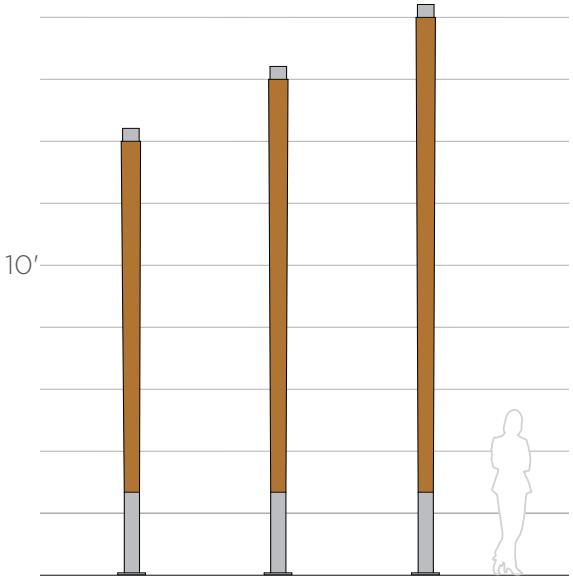

Custom Reverse Round Taper





Glulam solid wood and aluminum pole available in custom lengths. Tenon adapters are available for luminaire mounting.

FEATURES:

- Custom CNC machined reverse tapered round pole per project requirements.
- Standard and custom tenons available per luminaire and project requirements.
- Solid glulam wood construction.
- Round extruded aluminum pole base with flush handhole cover held with countersunk stainless steel fasteners.

SPECIFICATIONS:

HOUSING: Solid wood pole is assembled through glulam construction and precision machined using CNC technology. Reverse taper is provided per project requirements. Consult factory for options. An electrical raceway is provided in the pole's center for wiring. Laminations measure no more than 2" in thickness. Adhesive complies with ASTM D-2559 glulam construction specifications for extreme exposed weather conditions, is waterproof and rated for wet or dry use exposure.

Glulam wood shaft is fastened to aluminum pole base welded to a 3/4" thick aluminum anchor bolt base. Anchor bolt kit includes (4) 3/4" hot dip galvanized anchor bolts and fasteners and ridged concrete pour template.

FIXTURE MOUNTING: Fixtures mount by tenon adapters. Consult factory for tenon sizes per project luminaire requirements. Luminaires shall be provided by others.

ELECTRICAL: A 5/16" – 18 grounding point is provided on the aluminum pole base. Wireway access is provided through a NEC compliant handhole with a flush, gasketed cover plate.

FINISHES AND MATERIALS: Woods are finished with a low VOC waterborne matte exterior finish containing UV and mildew inhibitors. All aluminum parts are polyester powder coat painted.

HARDWARE: Fasteners are stainless steel. Anchor bolt kits are hot dip galvanized.

© 2017 STRUCTURA INC.

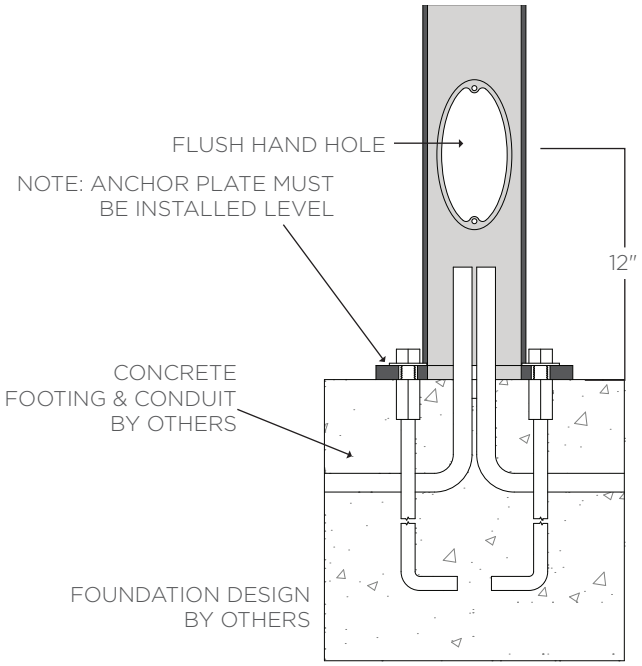

	Bolt Circle	Conduit Opening
5.5" Base	8.5" dia	5" dia.
7.0" Base	11" dia.	6.5" dia.

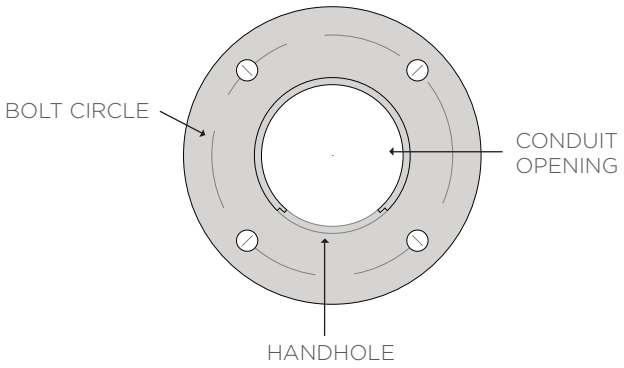

ORDERING GUIDE: EXAMPLE: BOL-REV-12-55-60-S5-C5-T4004-STD

The mark of responsible forestry
FSC® C102326

BOL	REV		55					MOD
1	2	3	4	5	6	7	8	9

1 Series
BOL Bol

2 Shaft Shape
REV Custom Reverse Round Taper

3 Height
XX Specific Height in Feet (consult factory)

4 Base Diameter
55 5.5"

5 Top Diameter
XX Specify in inches

6 Wood Finish
S* See color options on finishes technical sheet

7 Metal Finish
C* See color options on finishes technical sheet
CSM Custom Color

8 Fixture Mounting
TXXX Specify tenon, diameter and height in inches

9 Special
STD Standard
MOD Modified

© 2017 STRUCTURA INC

valmont STRUCTURES

8' Round Non-Tapered Alu
4-Bolt Anchor Base Pole

YG8

Lam Partners ARCHITECTURAL LIGHTING DESIGN

Job Name:	Client Name:
Job Location - City: State:	Created By: Date:
Product: Quote:	Customer Approval: Date:

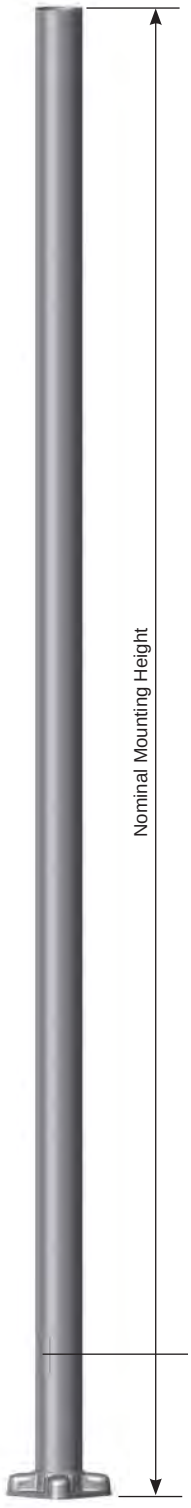

Tenon Top



Pole Cap



Cross Section



Handhole



Nut Covers (Standard)



Dart Square - 2T (Optional)



SPECIFICATIONS

Pole - The pole shaft is extruded from seamless 6000 series alloy aluminum.

Pole Top - A pole top tenon is provided for top mount luminaire and/or bracket. A removable pole cap is available for poles receiving drilling patterns for side-mount luminaire arm assemblies.

Handhole - A covered handhole with hardware and grounding provision are provided.

Base Cover - Optional Dart Square-2T cast and decorative base covers available as special order.

Anchor Base - The anchor base is cast from 356 alloy aluminum. The completed assembly is heat-treated to a T6 temper. Aluminum nut covers are included with anchor base unless otherwise specified.

Anchor Bolts - Anchor bolts conform to ASTM F1554 Grade 55 and are provided with two hex nuts and two flat washers. Bolts have an “L” bend on one end and are galvanized a minimum of 12" on the threaded end.

Finish - The standard finish for the pole assembly and components is satin brushed, natural anodize, duranodic or polyester powder applied coating in accordance with Valmont’s Specifications. Additional finish options available upon request.

8' to 14'
Round Non-Tapered Aluminum
4-Bolt Anchor Base Pole

valmont STRUCTURES

YG8

Lam Partners ARCHITECTURAL LIGHTING DESIGN

Job Name:	Client Name:
Job Location - City: State:	Created By: Date:
Product: Quote:	Customer Approval: Date:

ANCHORAGE DATA

POLE		BASE PLATE				ANCHOR BOLTS		
BASE OD (IN)	WALL THK (IN)	BOLT CIRCLE DIA (IN)	BOLT CIRCLE ± (IN)	SQUARE (IN)	THK (IN)	DIA x LENGTH x HOOK (IN)	PROJECTION (IN)	± (IN)
4.00	0.125	7.50	0.75	8.91	0.630	0.75 x 17.00 x 3.00	3.25	N/A
4.50	0.125	7.84	0.78	9.26	0.630	0.75 x 17.00 x 3.00	3.25	N/A
4.50	0.188	7.84	0.78	9.26	0.630	0.75 x 17.00 x 3.00	3.25	N/A
5.00	0.125	8.63	0.88	9.61	0.630	0.75 x 17.00 x 3.00	3.25	N/A
5.00	0.156	8.63	0.88	9.61	0.630	0.75 x 17.00 x 3.00	3.25	N/A
5.00	0.188	8.63	0.88	9.61	0.630	0.75 x 17.00 x 3.00	3.25	N/A

Anchor Base Detail

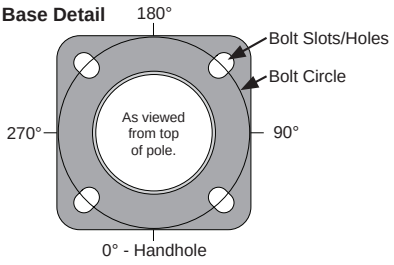

LOAD AND DIMENSIONAL DATA

DESIGN INFORMATION											POLE DIMENSIONS					
	70 MPH w/1.3 GUST		80 MPH w/1.3 GUST		90 MPH w/1.3 GUST		100 MPH w/1.3 GUST		110 MPH w/1.3 GUST[1]							
NOMINAL MOUNTING HEIGHT	MAX EPA[2] (SQ FT)	MAX WEIGHT (LBS)	MAX EPA[2] (SQ FT)	MAX WEIGHT (LBS)	MAX EPA[2] (SQ FT)	MAX WEIGHT (LBS)	MAX EPA[2] (SQ FT)	MAX WEIGHT (LBS)	MAX EPA[2] (SQ FT)	MAX WEIGHT (LBS)	POLE HEIGHT	BASE OD (IN)	TOP OD (IN)	WALL THK (IN)	STRUTURE WEIGHT[3] (LBS)	MODEL NUMBER
8'-0"	10.7	75	7.9	75	6.0	75	4.7	75	3.9	75	8'-0"	4.00	4.00	0.125	19	080040404S4
	14.9	75	11.2	75	8.6	75	6.9	75	5.7	75	8'-0"	4.50	4.50	0.125	21	080045454S4
	22.0	75	16.6	75	12.9	75	10.4	75	8.5	75	8'-0"	4.50	4.50	0.188	29	080045456S4
10'-0"	8.1	75	5.9	75	4.3	75	3.3	75	2.7	75	10'-0"	4.00	4.00	0.125	22	100040404S4
	11.5	100	8.4	100	6.4	100	5.1	100	4.1	100	10'-0"	4.50	4.50	0.125	25	100045454S4
	17.3	100	12.8	100	9.9	100	7.9	100	6.5	100	10'-0"	4.50	4.50	0.188	35	100045456S4
	15.4	100	11.5	100	8.9	100	7.1	100	5.8	100	10'-0"	5.00	5.00	0.125	27	100050504S4
12'-0"	6.2	75	4.3	75	3.0	75	2.2	75	1.7	75	12'-0"	4.00	4.00	0.125	26	120040404S4
	9.0	75	6.5	75	4.8	75	3.8	75	3.0	75	12'-0"	4.50	4.50	0.125	29	120045454S4
	13.9	75	10.2	75	7.7	75	6.2	75	5.0	75	12'-0"	4.50	4.50	0.188	41	120045456S4
	12.2	100	9.0	100	6.9	100	5.5	100	4.4	100	12'-0"	5.00	5.00	0.125	32	120050504S4
	15.5	100	11.5	100	8.9	100	7.1	100	5.8	100	12'-0"	5.00	5.00	0.156	38	120050505S4
	18.8	100	14.0	100	10.9	100	8.7	100	7.1	100	12'-0"	5.00	5.00	0.188	45	120050506S4
14'-0"	4.6	100	3.0	100	1.9	100	1.2	100	0.9	100	14'-0"	4.00	4.00	0.125	30	140040404S4
	6.9	100	4.7	100	3.4	100	2.6	100	2.0	100	14'-0"	4.50	4.50	0.125	33	140045454S4
	11.1	100	7.9	100	5.9	100	4.6	100	3.7	100	14'-0"	4.50	4.50	0.188	47	140045456S4
	9.7	100	6.9	100	5.3	100	4.1	100	3.3	100	14'-0"	5.00	5.00	0.125	36	140050504S4
	12.5	100	9.1	100	7.0	100	5.5	100	4.4	100	14'-0"	5.00	5.00	0.156	44	140050505S4
	15.3	100	11.2	100	8.7	100	6.9	100	5.6	100	14'-0"	5.00	5.00	0.188	52	140050506S4

1. EPA values are calculated using fastest mile winds.
2. EPA represents the Effective Projected Area of each luminaire. Designs are limited to top mount or side-mount luminaires. Variations from sizes above are available upon inquiry at the factory. Satisfactory performance of poles is dependent upon the pole being properly attached to a supporting foundation of adequate design.
3. Structure weight is a nominal value which includes the pole shaft and base plate.

PRODUCT ORDERING CODES

CROSS SECTION	MODEL NUMBER	FIXTURE MOUNTING	COLOR		OPTIONS
R		--		_	
R = Round	080040404S4 080045454S4 080045456S4 100040404S4 100045454S4 100045456S4 100050504S4 120040404S4 120045454S4 120045456S4 120050504S4 120050505S4 120050506S4 140040404S4 140045454S4 140045456S4 140050504S4 140050505S4 140050506S4	**Drill Mounting** D1 = 1 Luminaire D2 = 2 @ 180° D3 = 3 @ 120° D4 = 4 @ 90° D5 = 2 @ 90° D6 = 3 @ 90° **Tenon Mounting** P2 = 2.38" OD x 4.00" P3 = 3.50" OD x 6.00" P4 = 4.00" OD x 6.00" P5 = 2.88" OD x 4.00" P7 = 2.38" OD x 5.00" PQ = 2.38" OD x 12.00" PD = 3.00" OD x 3.00" -- = Plain Top P9 = Other Tenon (Contact Factory)	**Polyester Powder** DWH = White DSS = Sandstone HTG = Hunter Green DNA = Natural Aluminum DCG = Charcoal Gray DMB = Medium Bronze DNB = New Dark Bronze DDB = Dark Bronze DBL = Black DSB = Steel Blue DTG = Dark Green DBR = Red SC = Special Color (Contact Factory)	**Anodized** 204 = Clear Natural 311 = Light Bronze* 312 = Medium Bronze* 313 = Dark Bronze* 335 = Black* *Duranodic Anodize **Brushed** SBF = Satin Brushed	See Accessories at valmontstructures.com (Please Specify with Code)

SPC7074 09/17 valmontstructures.com carries the most current spec information and supersedes these guidelines.

Specification Sheet

lumenbeam

Medium

WHITE AND STATIC COLOURS

Project Name _____ **Qty** _____

Type _____ **Catalog / Part Number** _____



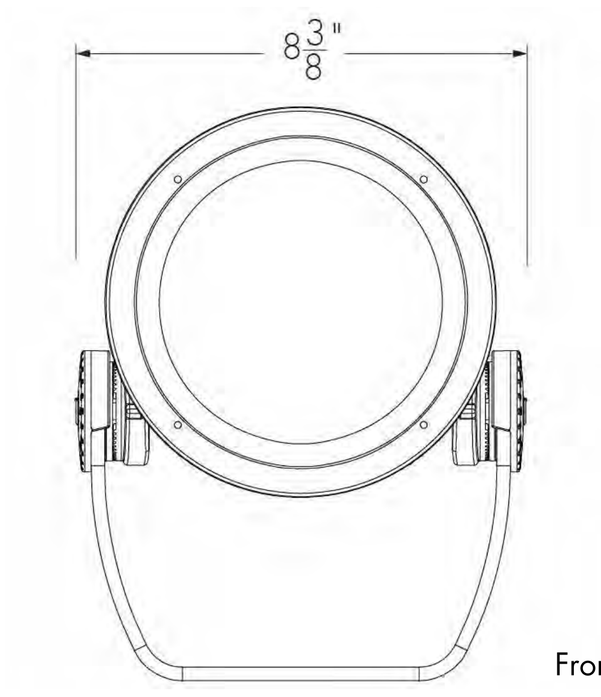

Front view

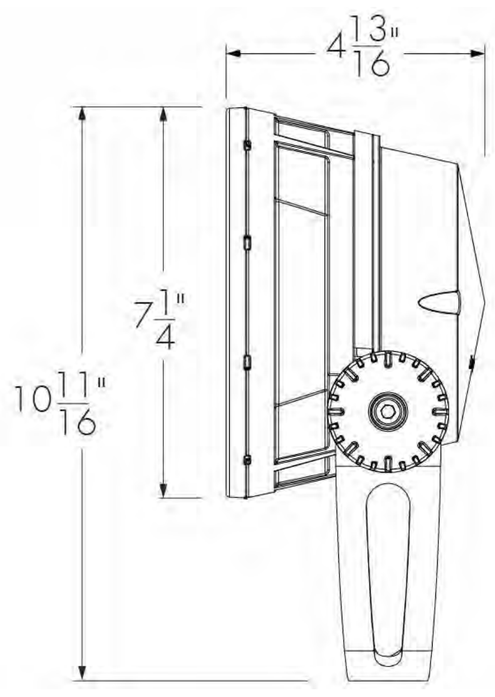

Side view

Photometric Summary

4000K	Delivered output (lm)	Intensity (peak cd)
VN	1,754	75,278
NS	1,552	56,914
NF	1,484	10,878
FL	1,428	4,003
WFL	1,370	1,312

Photometric performance is measured in compliance with IESNA LM-79-08.

Optics

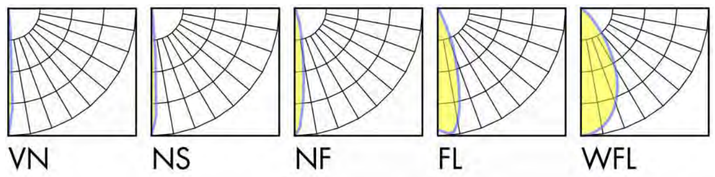

Control

ON/OFF 1-10V DALI DMXrdm

Rating

c UL us CE RoHS

Description

The Lumenbeam Medium is a high-performance, 28W luminaire for solving numerous interior and exterior challenges such as facades, columns, trees or other architectural and landscape features. It offers a flexible package of options: a choice of optics for flood or accent lighting; a number of colour temperatures and colours; various mounting options, accessories, spread lenses and controls.

Features

Colour and Colour Temperature	2200K, 2700K, 3000K, 3500K, 4000K, 5700K, Red, Green, Blue
Optics (nominal distribution)	6°, 10°, 20°, 40°, 60°
Optical Option	Linear spread lens horizontal distribution, Linear spread lens vertical distribution
Options	Short Yoke, 3G ANSI C136.31 Vibration Rating for bridge applications, Corrosion-resistant coating for hostile environments
Power Consumption	28 W
Warranty	5-year limited warranty

Performance

Delivered Output	1,754 lm (4000K, VN optic)
Delivered Intensity	75,278 cd at nadir (4000K, VN optic)
Illuminance at Distance	Minimum 1 fc at 274 ft distance (4000K, VN optic)
Colour Consistency	2 SDCM
Colour Rendering	CRI 80+
Lumen Maintenance	L70 120,000 hrs (Ta 25 °C)

lumenpulse™ 11/13 Weston Street, Unit no 13.3.2 London, SE1 3ER GB **T** +44 (0) 2031 765370 info@lumenpulse.com **www.lumenpulsegroup.com**

Lumenpulse Group Inc. reserves the right to make changes to this product at any time without prior notice and such modification shall be effective immediately
2017.11.28 copyright © 2017 Lumenpulse Group Inc.
MG - R30

Specification Sheet

lumenbeam

Medium

WHITE AND STATIC COLOURS

Physical

Housing Material	Low copper content high pressure die-cast aluminium
Yoke Material	Heavy aluminium (standard yoke included)
Lens Material	Clear tempered glass
Hardware Material	Stainless steel
Gasket Material	Silicone
Surface Finish	Electrostatically applied polyester powder coat
Weight	6.7 lbs
EPA	Front = 0.46 sq ft, Side = 0.37 sq ft

Electrical and control

Voltage	100 to 277 volts
Fixture Cable	Power and data in 1 cable, 3 ft cord standard (5 x 1.5 sq mm), other lengths available
Inrush Current (peak)	21A @230VAC
Resolution (DMX/RDM)	Per fixture, 8-bit or 16-bit
Control	On/Off control, Dim to Warm via 1-10V (DWW only), DALI dimming, DMX/RDM enabled, Lumentalk system is enabled with LDB accessory - see typical wiring diagrams for details

Environmental

Operating Temperature	-13 °F to 122 °F
IP Rating	IP66
IK Rating	IK09

Accessories (order separately)

Control Boxes	Power and control box - daisy chain configuration, Power and control box - star configuration, Lumentalk Data Bridge
Control Systems	Lumentouch 2.0™, Lumencue
Diagnostic and Addressing Tools	LumenID, LumentalkID

Lumenpulse Group Inc. reserves the right to make changes to this product at any time without prior notice and such modification shall be effective immediately
2017.11.28 copyright © 2017 Lumenpulse Group Inc.
MG - R30

Specification Sheet

lumenbeam

Medium

WHITE AND STATIC COLOURS

Mounting options

SY - Short yoke

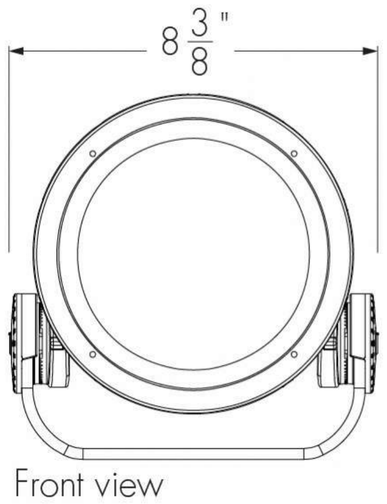

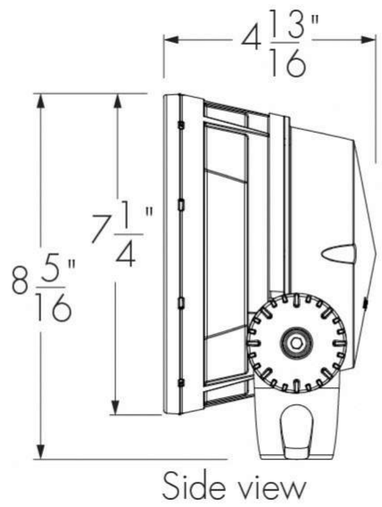

Mounting details

Mounting hole pattern - standard and short yoke

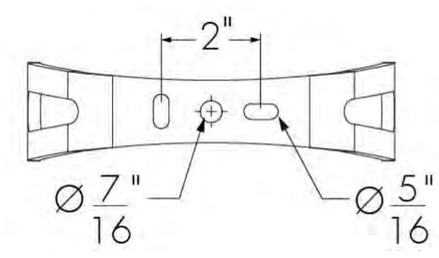

Adjustable pivot limits

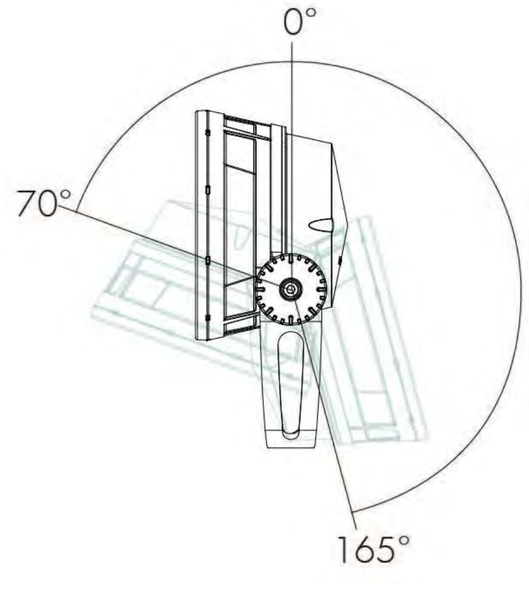

Standard yoke

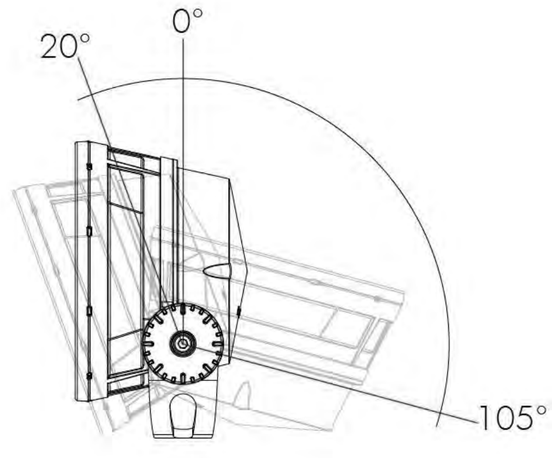

Short yoke

Optical options

LSLH - Linear spread lens horizontal distribution
LSLV - Linear spread lens vertical distribution



LSLH



LSLV

	Beam angle with LSLH/LSLV
VN	8° x 60°
NS	9° x 60°
NF	18° x 65°
FL	32° x 72°

Factory installed, not adjustable on site. Not available for WFL optic.
See 'Optical Accessories' section for field adjustable spread lens (LSLA).

Lumenpulse Group Inc. reserves the right to make changes to this product at any time without prior notice and such modification shall be effective immediately
2017.11.28 copyright © 2017 Lumenpulse Group Inc.
MG - R30

Specification Sheet

lumenbeam

Medium

WHITE AND STATIC COLOURS

Mounting accessories (order separately)

Round pole mounting accessory

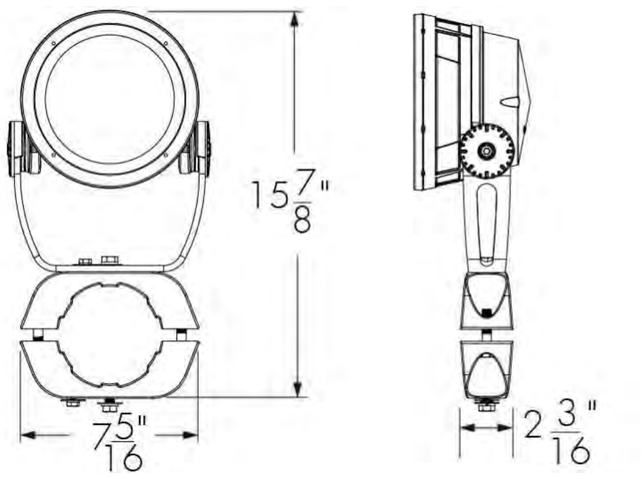

PM4 model shown.
Consult factory for square pole section.

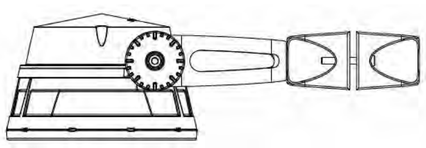

PM4-1, PM4.5-1, PM5-1 - Round pole mounting accessory - single fixture

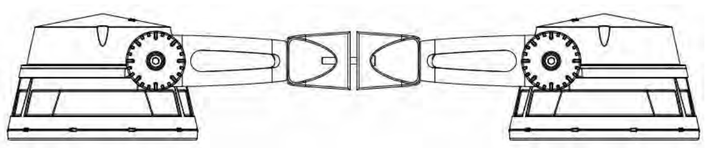

PM4-2, PM4.5-2, PM5-2 - Round pole mounting accessory - twin fixures
*One bracket assembly is supplied per 2 fixtures unless otherwise specified.

	PM4	PM4.5	PM5
For pole Ø	4" ± 1/16"	4.5" ± 1/16"	5" ± 1/16"

Consult factory for other pole diameters.

Tenon adapter

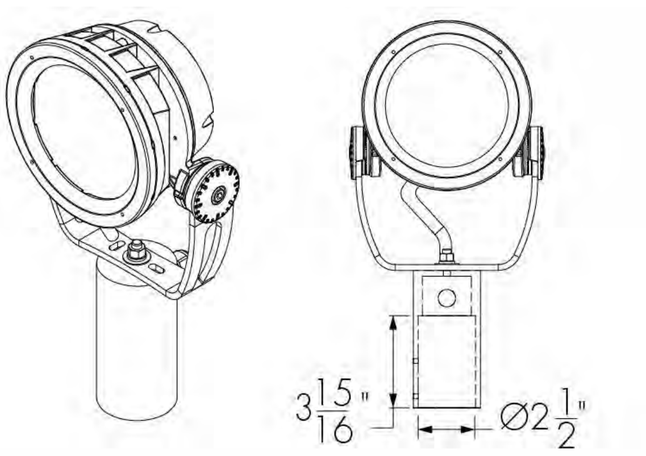

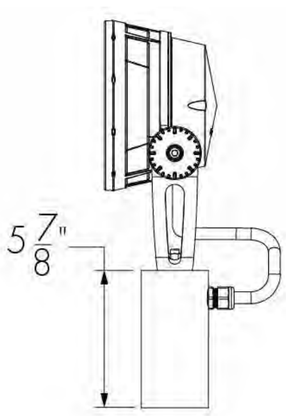

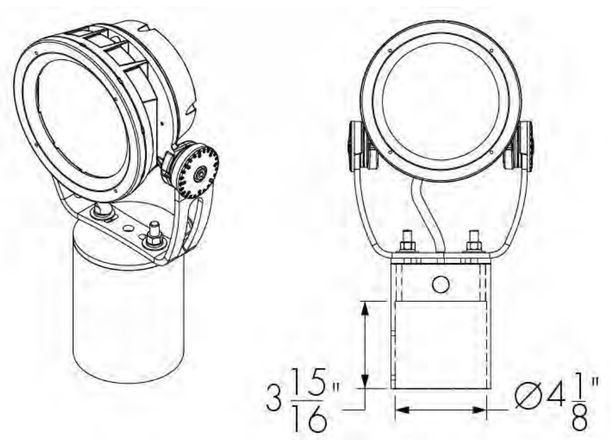

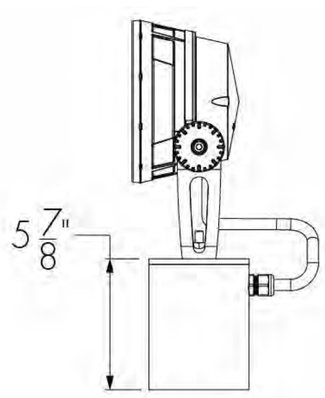

TN2 - Tenon adapter to fit on 2 3/8 in O.D. tenon

TN4 - Tenon adpater to fit on 4 in O.D. tenon

SK - Stake mounting

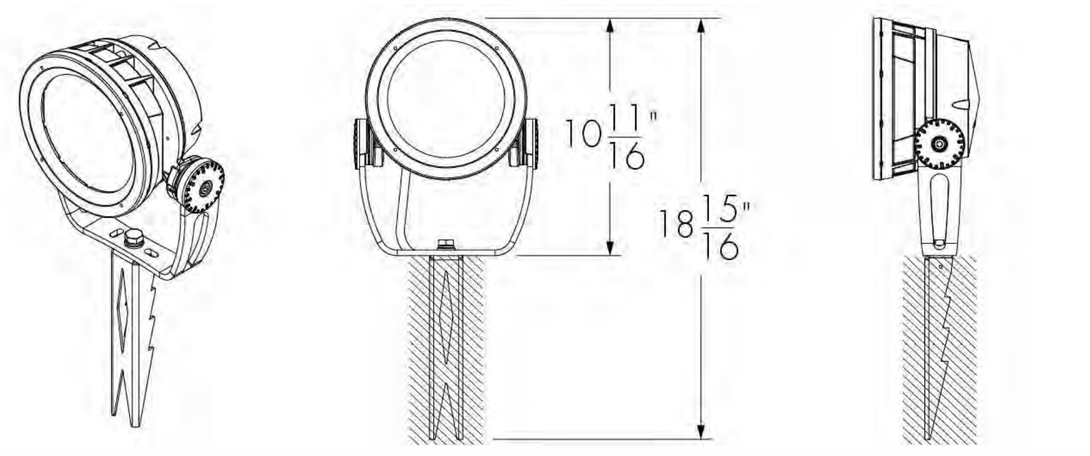

Lumenpulse Group Inc. reserves the right to make changes to this product at any time without prior notice and such modification shall be effective immediately
2017.11.28 copyright © 2017 Lumenpulse Group Inc.
MG - R30

Specification Sheet

lumenbeam

Medium

WHITE AND STATIC COLOURS

Optical accessories (order separately)

Installed optical accessories will affect the maximum pivot limits for each mounting option, consult factory for details.

SN - Snoot

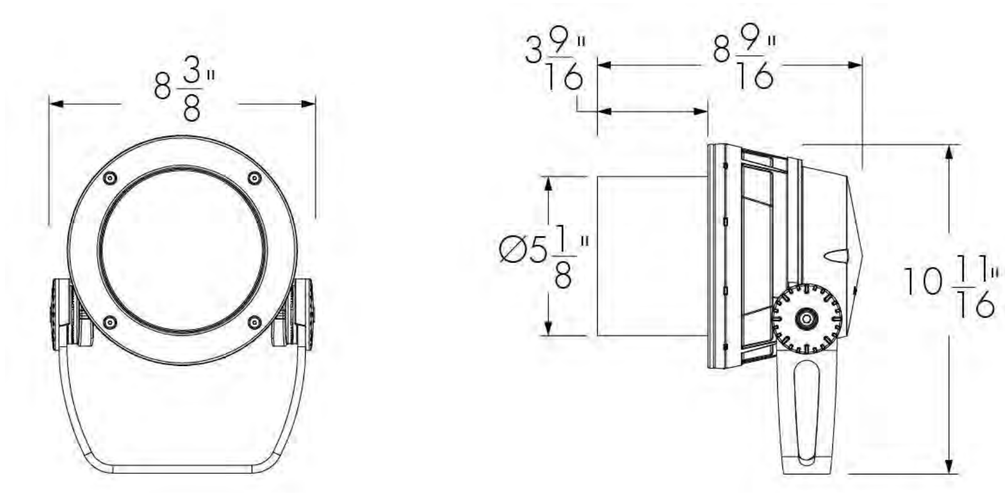

LBMSN-FINISH-BK
Interior surface painted black. Please specify desired exterior FINISH from list of available finishes.

SNW - Snoot wide

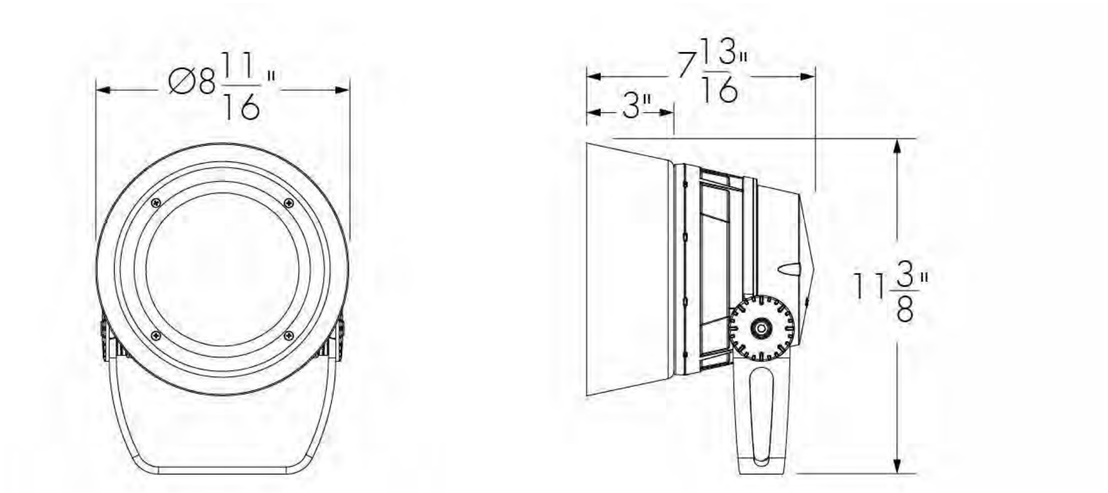

LBMSNW-FINISH-BK
Interior surface painted black. Please specify desired exterior FINISH from list of available finishes.

VS - Visor

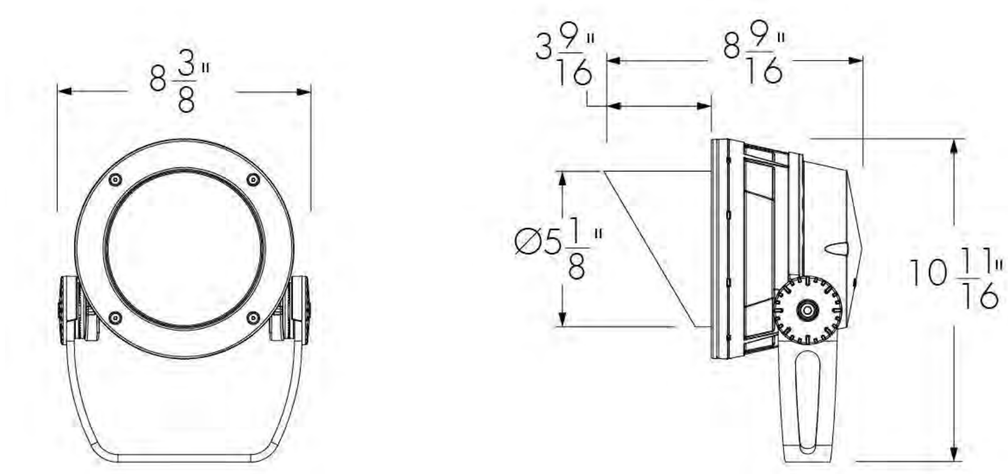

LBMVS-FINISH-BK
Interior surface painted black. Please specify desired exterior FINISH from list of available finishes.

LSLA - Linear spread lens adjustable

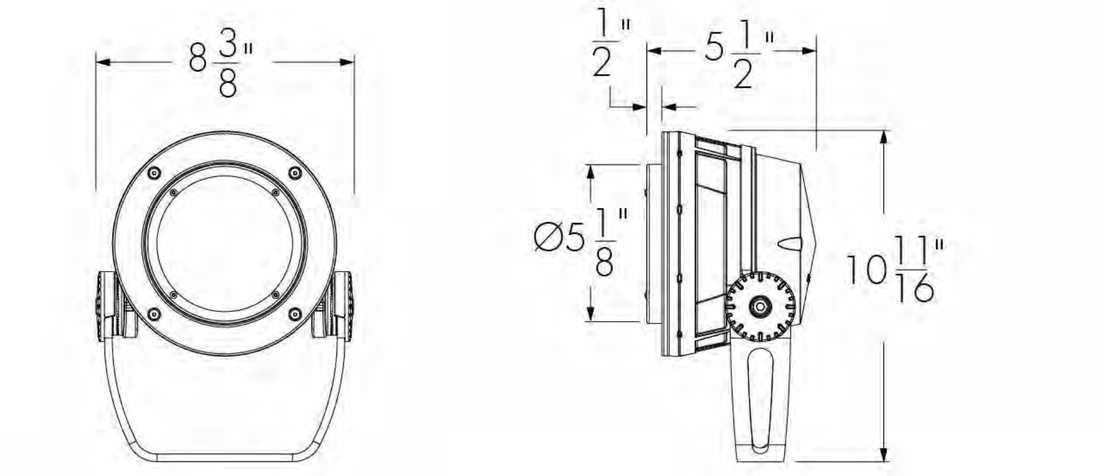

LBMLSLA-FINISH
Please specify desired exterior FINISH from list of available finishes.

WG - Wire guard

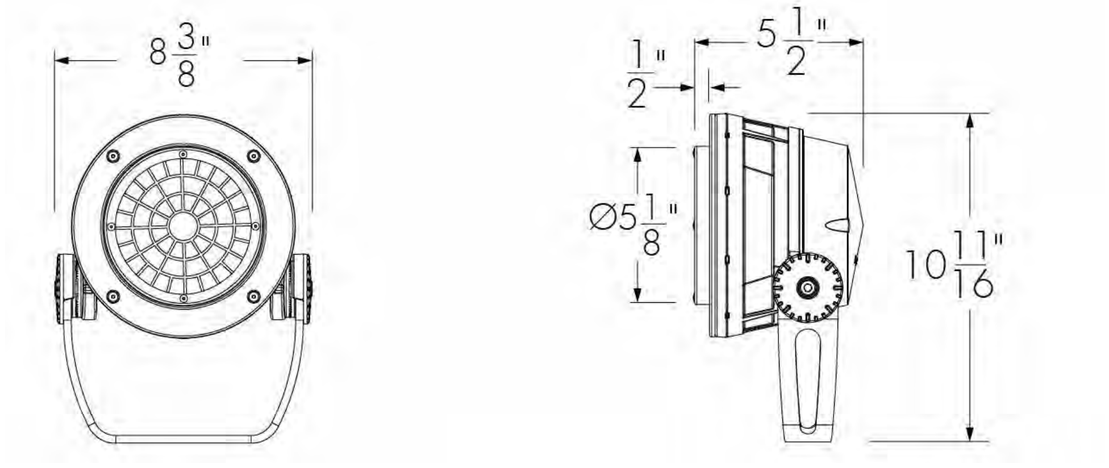

LBMWG-FINISH
Please specify desired exterior FINISH from list of available finishes.

Accessory combinations

+	Snoot	Snoot wide	Visor
Linear spread lens adjustable	YES	NO*	YES
Wire guard	YES	NO	YES

Accessory combinations must be ordered together on a single line.
Ex: A snoot + wire guard combination order code is LBMSNWG-BK-BK.
*Consult factory for a linear spread lens adjustable + snoot wide combination.

lumenpulse™ 11/13 Weston Street, Unit no 13.3.2 London, SE1 3ER GB **T** +44 (0) 2031 765370 info@lumenpulse.com **www.lumenpulsegroup.com**

Lumenpulse Group Inc. reserves the right to make changes to this product at any time without prior notice and such modification shall be effective immediately
2017.11.28 copyright © 2017 Lumenpulse Group Inc.
MG - R30

Specification Sheet

lumenbeam

Medium

WHITE AND STATIC COLOURS

Available exterior finishes for optical accessories

BK - Black Sandtex®
BRZ - Bronze Sandtex®
SI - Silver Sandtex®
WH - Smooth white
BKTX - Textured black
BRZTX - Textured bronze, non-metallic
GRATX - Textured medium grey
GRNTX - Textured green
WHTX - Textured white
CC - Custom colour and finish (please specify RAL colour)*

*Lumenpulse offers a wide selection of RAL CLASSIC (K7) colours with a smooth texture and high-gloss finish. Please consult factory for a list of available K7 colours, other RAL textures and glosses, or to match alternate colour charts. Final colour matching results may vary.

lumenpulse™ 11/13 Weston Street, Unit no 13.3.2 London, SE1 3ER GB **T** +44 (0) 2031 765370 info@lumenpulse.com **www.lumenpulsegroup.com**

Lumenpulse Group Inc. reserves the right to make changes to this product at any time without prior notice and such modification shall be effective immediately
2017.11.28 copyright © 2017 Lumenpulse Group Inc.

Specification Sheet

lumenbeam

Medium

WHITE AND STATIC COLOURS

Typical wiring diagrams

Wiring colour code

CE Colour Code	USE
Yellow/Green Brown Blue Black Grey	Ground Live 100-277V Neutral 1-10V / Data + 1-10V / Data -

CE Class II Colour Code	USE
Brown Blue Black 1 Black 2 Grey	Live 100-277V Neutral Signal common (DMX/RDM only) 1-10V / Data + 1-10V / Data -

On/Off control (NO)

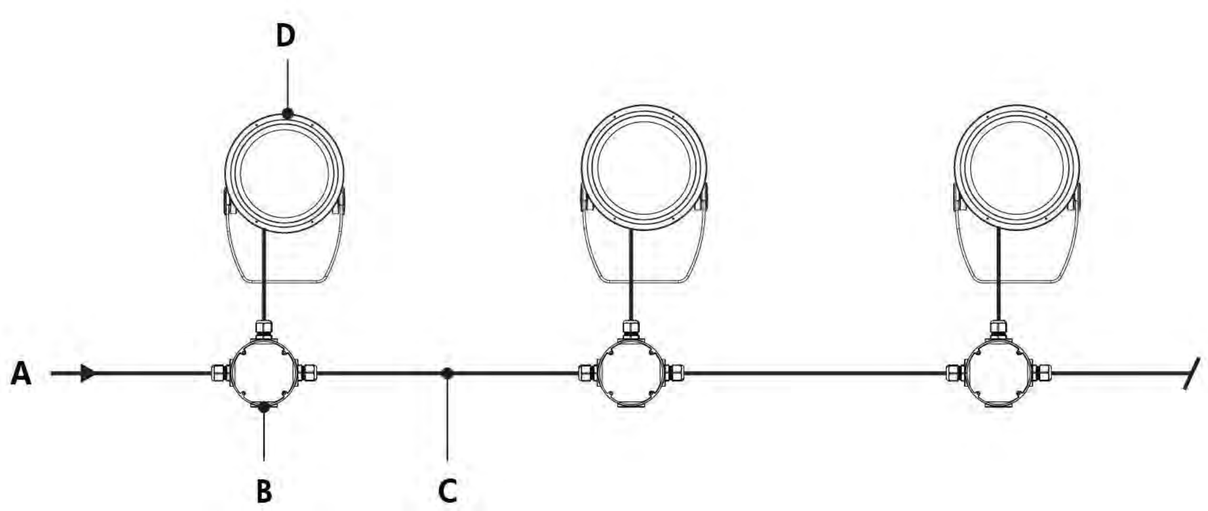

A - Power input (100-277V)
B - Junction box (by others)
C - Power wiring (by others)
D - Lumenbeam Medium

On/Off control (NO) - wiring detail - CE

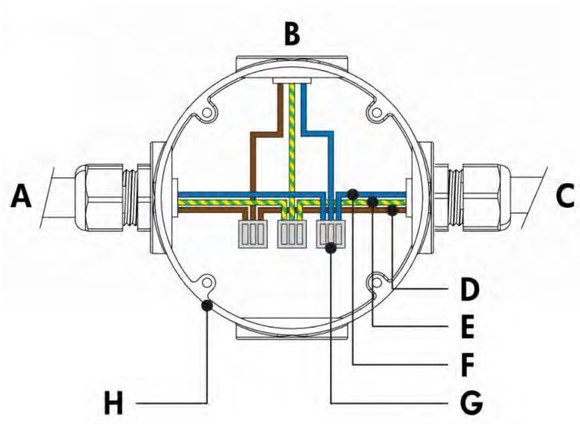

A - Power input or from previous fixture
B - To fixture
C - To next fixture
D - Live
E - Ground
F - Neutral
G - Terminal connector (by others)
H - Junction box (by others)

On/Off control (NO) - wiring detail - CE Class II option

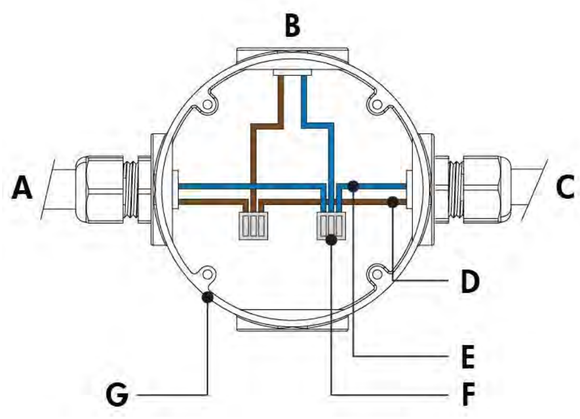

A - Power input or from previous fixture
B - To fixture
C - To next fixture
D - Live
E - Neutral
F - Terminal connector (by others)
G - Junction box (by others)

- Consult factory for specific applications and maximum fixture count/cable length recommendations.
- 28 watts per fixture.

11/13 Weston Street, Unit no 13.3.2 London, SE1 3ER GB **T** +44 (0) 2031 765370 info@lumenpulse.com **www.lumenpulsegroup.com**

Lumenpulse Group Inc. reserves the right to make changes to this product at any time without prior notice and such modification shall be effective immediately
2017.11.28 copyright © 2017 Lumenpulse Group Inc.
MG - R30

Specification Sheet

lumenbeam

Medium

WHITE AND STATIC COLOURS

Lumentalk (LT)

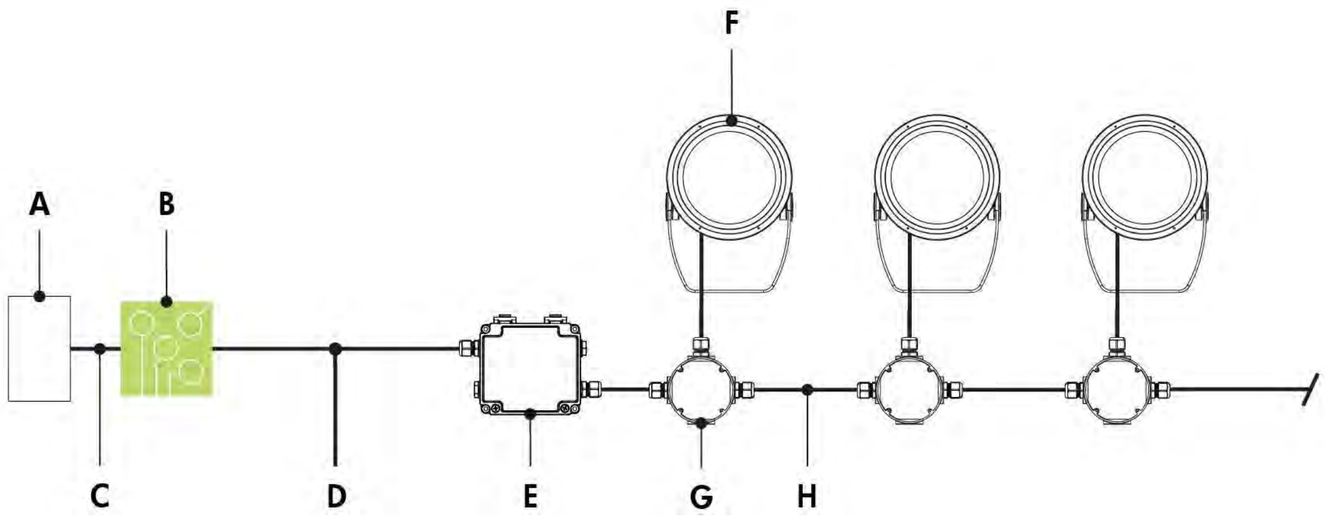

A - Third party dimmer/controller
B - Lumentranslator (LTL-010, -DMX, -TRIAC, -DALI)
C - Data wiring (by others)
D - Power line (120-277V AC)
E - Lumentalk Data Bridge (LDB-DIM or LDB-DMX)
F - Lumenbeam Medium
G - Junction box (by others)
H - Power wiring (by others)

Lumentalk (LT) - wiring detail using LDB

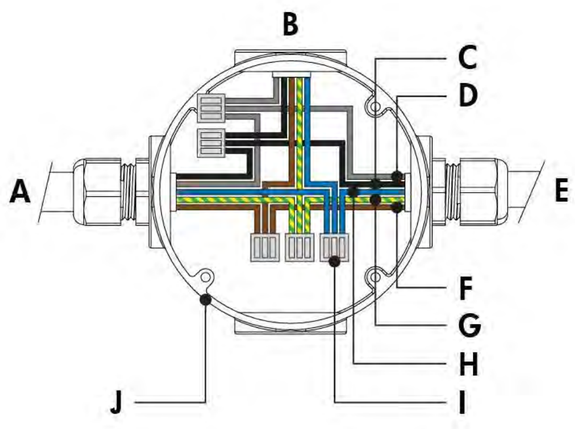

A - From Lumentalk Data Bridge (control over power line via Lumentalk system) or from previous fixture
B - To fixture
C - 0-10 V + / Data +
D - 0-10 V - / Data -
E - To next fixture
F - Live
G - Ground
H - Neutral
I - Terminal connector (by others)
J - Junction box (by others)

- Consult factory for specific applications and maximum fixture count/cable length recommendations.
- Lumentalk Data Bridge required for Lumentalk system, see LDB installation instructions for details.

- For applications with all fixtures controlled as 1 zone: fixtures and Lumentalk Data Bridge must be specified as DIM. Maximum of 10 fixtures per LDB-DIM, consult factory for applications that require additional capabilities.
- For applications with fixtures controlled individually: fixtures and Lumentalk Data Bridge must be specified as DMX, 2-step commissioning process: 1 - DMX/RDM system using LumenID software and a LID, 2 - Lumentalk system using LumentalkID software and a LID-LT. Maximum of 32 fixtures per LDB-DMX. Consult factory for details.

- For DMX applications: 1 DMX controller per Lumentalk network, maximum of 48 DMX channels per Lumentalk network (minimum step transition update rate is 1 second, minimum fade time between two colours is 1 minute). Consult factory for applications that require additional capabilities.
- Maximum of 1 transmitter (Lumentranslator or Lumenlink) per system.
- No third party fixtures allowed on the same circuit.
- Consult factory for DALI Lumentalk applications.
- 1% minimum dimming value.
- 28 watts per fixture.

lumenpulse™ 11/13 Weston Street, Unit no 13.3.2 London, SE1 3ER GB **T** +44 (0) 2031 765370 info@lumenpulse.com **www.lumenpulsegroup.com**

Lumenpulse Group Inc. reserves the right to make changes to this product at any time without prior notice and such modification shall be effective immediately
2017.11.28 copyright © 2017 Lumenpulse Group Inc.
MG - R30

Specification Sheet

lumenbeam

Medium

WHITE AND STATIC COLOURS

1-10V dimming (DIM)

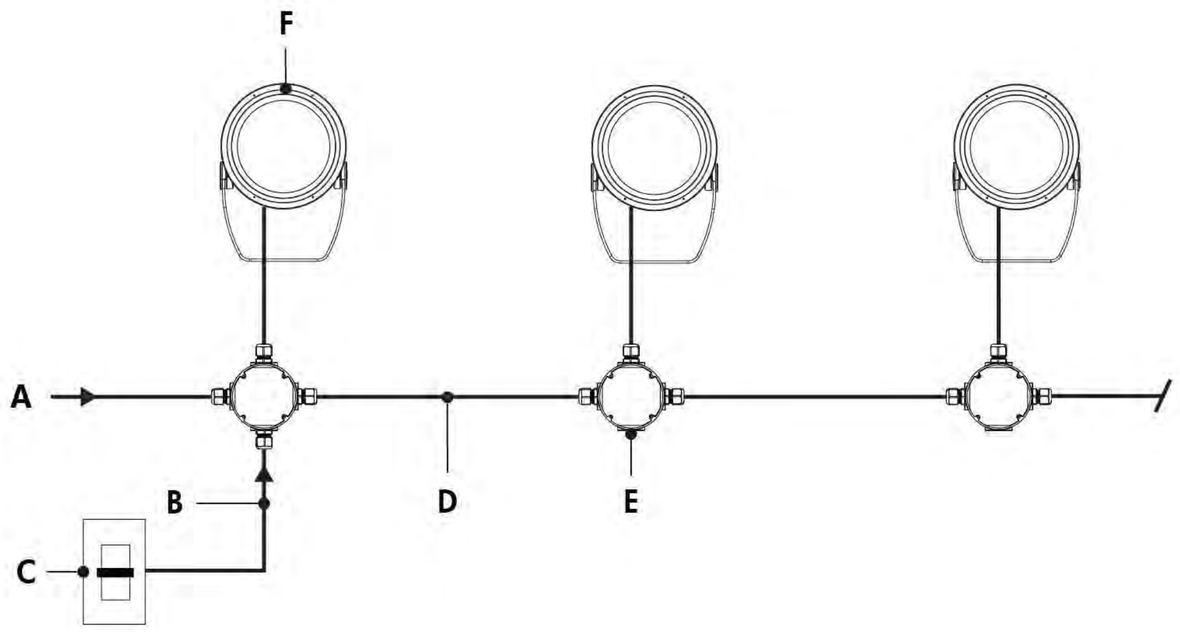

A - Power input (100-277V)
B - Data wiring (by others)
C - Third party dimmer
D - Power and data wiring (by others)
E - Junction box (by others)
F - Lumenbeam Medium

1-10V dimming (DIM) - wiring detail - CE

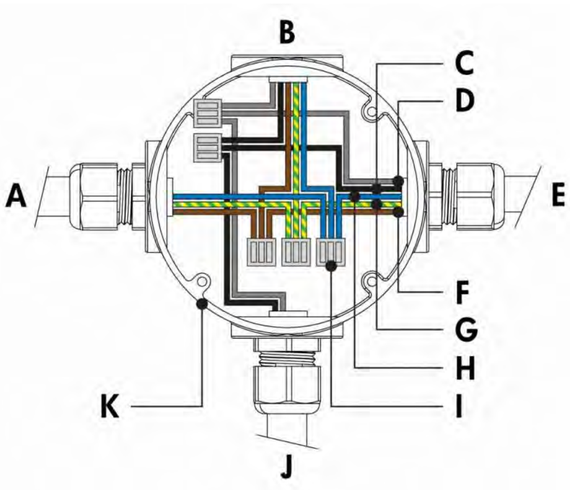

A - Power input or from previous fixture
B - To fixture
C - 1-10 V +
D - 1-10 V -
E - To next fixture
F - Live
G - Ground
H - Neutral
I - Terminal connector (by others)
J - From third party dimmer
K - Junction box (by others)

1-10V dimming (DIM) - wiring detail – CE Class II

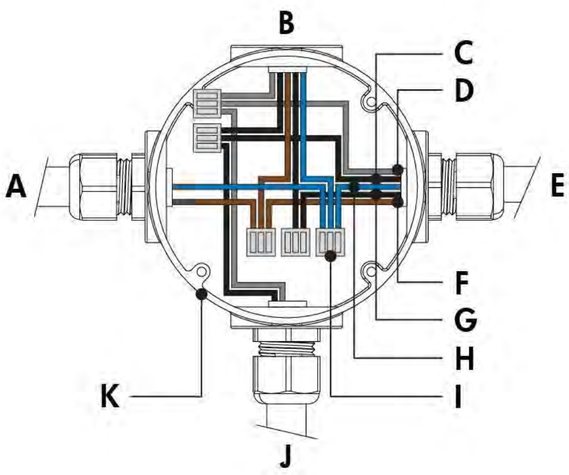

A - Power input or from previous fixture
B - To fixture
C - 1-10 V +
D - 1-10 V -
E - To next fixture
F - Live
G - Signal common
H - Neutral
I - Terminal connector (by others)
J - From third party dimmer
K - Junction box (by others)

- Consult factory for specific applications and maximum fixture count/cable length recommendations.
- 1-10V mA ratings: passive dimmer (Current Sink): 3mA per fixture, active dimmer (Current Source): 0.5mA per fixture.
- 10% minimum dimming value.
- 28 watts per fixture.

lumenpulse™ 11/13 Weston Street, Unit no 13.3.2 London, SE1 3ER GB **T** +44 (0) 2031 765370 info@lumenpulse.com **www.lumenpulsegroup.com**

Lumenpulse Group Inc. reserves the right to make changes to this product at any time without prior notice and such modification shall be effective immediately
2017.11.28 copyright © 2017 Lumenpulse Group Inc.
MG - R30

Specification Sheet

lumenbeam

Medium

WHITE AND STATIC COLOURS

DALI dimming (DALI)

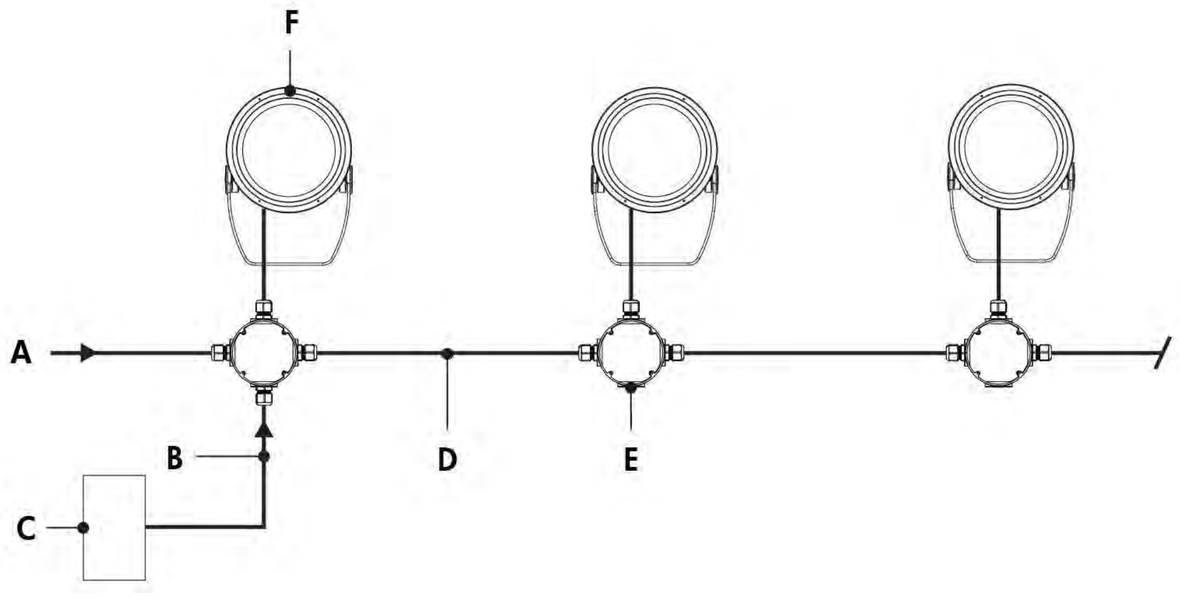

A - Power input (100-277V)
B - Data wiring (by others)
C - Third party DALI controller
D - Power and data wiring (by others)
E - Junction box (by others)
F - Lumenbeam Medium

DALI dimming (DALI) - wiring detail - CE

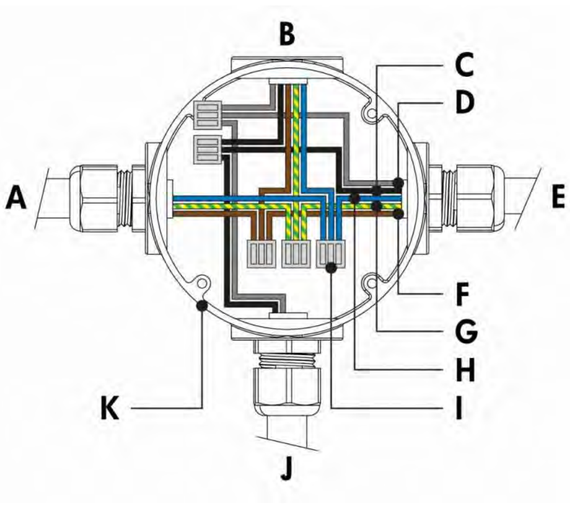

A - Power input or from previous fixture
B - To fixture
C - Data +
D - Data -
E - To next fixture
F - Live
G - Ground
H - Neutral
I - Terminal connector (by others)
J - From third party DALI controller
K - Junction box (by others)

DALI dimming (DALI) - wiring detail - CE Class II option

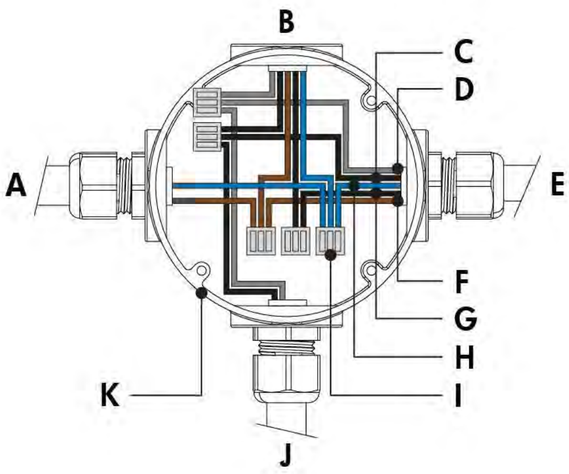

A - Power input or from previous fixture
B - To fixture
C - Data +
D - Data -
E - To next fixture
F - Live
G - Signal common
H - Neutral
I - Terminal connector (by others)
J - From third party DALI controller
K - Junction box (by others)

- Consult factory for specific applications and maximum fixture count/cable length recommendations.
- Maximum of 64 DALI fixtures per DALI loop.
- 1% minimum dimming value.
- 28 watts per fixture.

lumenpulse™ 11/13 Weston Street, Unit no 13.3.2 London, SE1 3ER GB **T** +44 (0) 2031 765370 info@lumenpulse.com **www.lumenpulsegroup.com**

Lumenpulse Group Inc. reserves the right to make changes to this product at any time without prior notice and such modification shall be effective immediately
2017.11.28 copyright © 2017 Lumenpulse Group Inc.
MG - R30

Specification Sheet

lumenbeam

Medium

WHITE AND STATIC COLOURS

Star Layout (DMX/RDM)

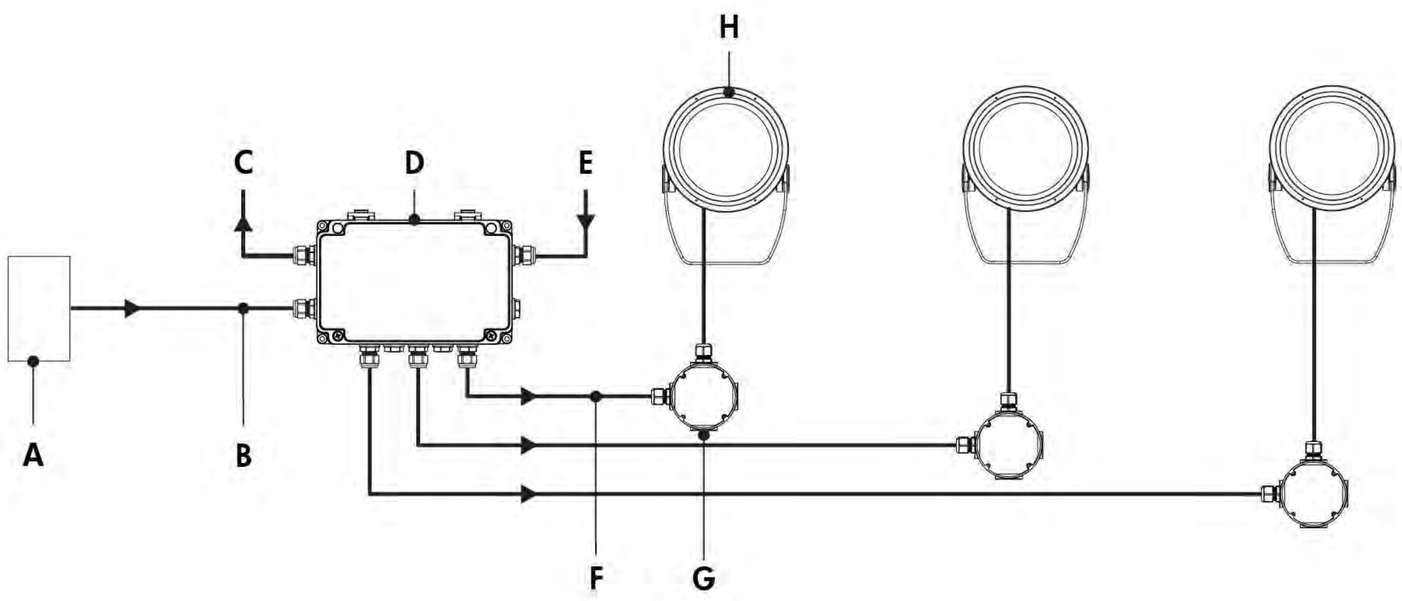

A - Third party DMX/RDM controller
B - Data input (Belden 9841 or equivalent, by others)
C - Data output to next CBX (optional, not isolated/not boosted)
D - CBX-ST
E - Power input (100-277V)
F - Power and data output to fixture (wiring by others)
G - Junction box (by others)
H - Lumenbeam Medium

Star Layout (DMX/RDM) - wiring detail - CE

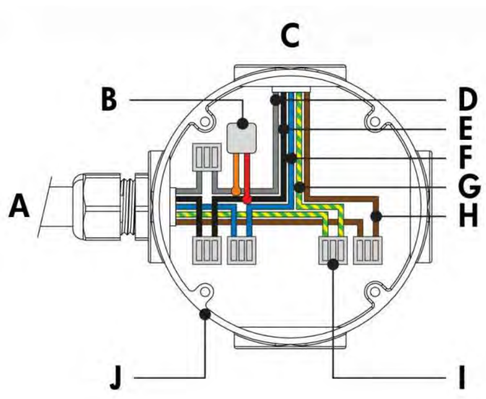

A - From CBX or previous fixture
B - Lumenterminator*
C - To fixture
D - Data -
E - Data +
F - Neutral
G - Ground
H - Live
I - Terminal connector (by others)
J - Junction box (by others)

Star Layout (DMX/RDM) - wiring detail - CE Class II option

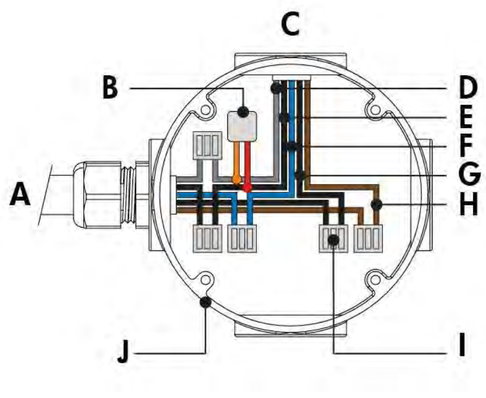

A - From CBX or previous fixture
B - Lumenterminator*
C - To fixture
D - Data -
E - Data +
F - Neutral
G - Signal common
H - Live
I - Terminal connector (by others)
J - Junction box (by others)

Maximum number of fixtures per run (Based on16A maximum, 1,5mm² cable, fixtures spaced 10ft on center, first fixture 50ft from CBX)				
Configuration/Voltage	**120V**	**208V**	**240V**	**277V**
LBM	29	32	32	32

- Consult factory for specific applications and maximum fixture count/cable length recommendations.
- Run length calculations are based on a voltage drop of no more than 25V.
- The DMX/RDM protocol states a maximum of 32 DMX/RDM enabled fixtures on any single run.
- Maximum of 4 DMX/RDM repeaters/CBX cascading in line.
- Maximum of 6 outputs per CBX-ST.
- Each fixture requires 1 DMX address.
- 1% minimum dimming value.
- 28 watts per fixture.

*DMX terminator is required at the end of each run to maintain data integrity. (6x) DMX lumenterminators included per CBX-ST. See installation instructions for details.

lumenpulse™

11/13 Weston Street, Unit no 13.3.2 London, SE1 3ER GB **T** +44 (0) 2031 765370 info@lumenpulse.com **www.lumenpulsegroup.com**

Lumenpulse Group Inc. reserves the right to make changes to this product at any time without prior notice and such modification shall be effective immediately
2017.11.28 copyright © 2017 Lumenpulse Group Inc.
MG - R30

Specification Sheet

lumenbeam

Medium

WHITE AND STATIC COLOURS

Daisy Chain Layout (DMX/RDM)

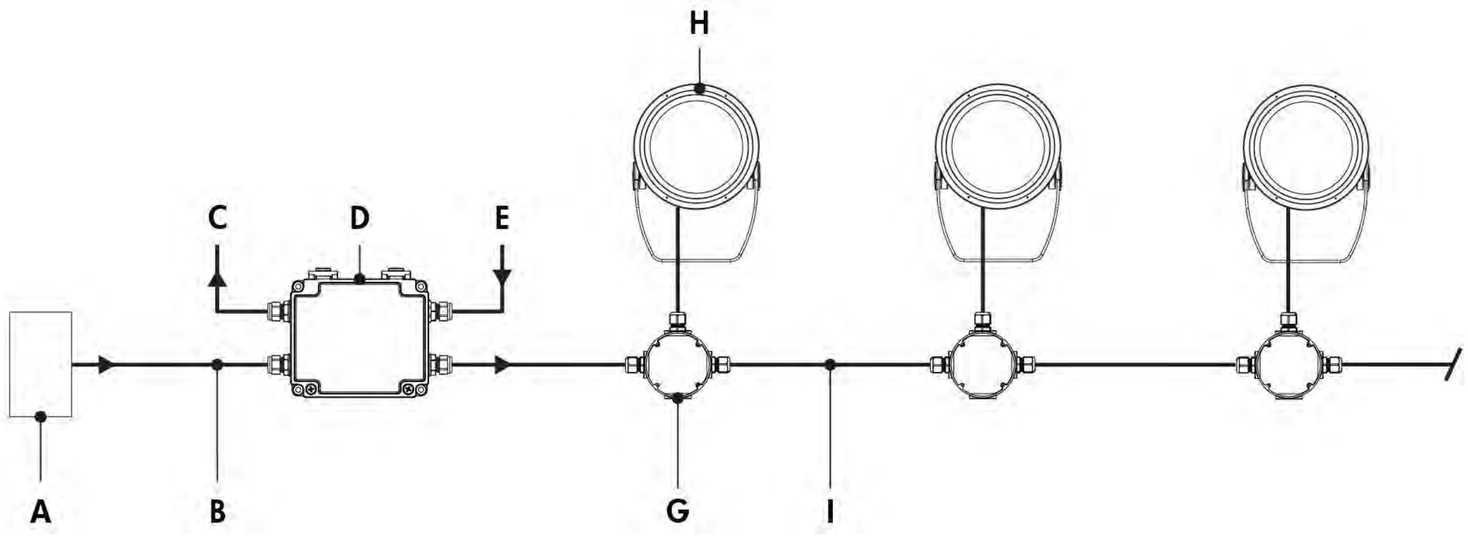

A - Third party DMX/RDM controller
B - Data input (Belden 9841 or equivalent, by others)
C - Data output to next CBX (optional, not isolated/not boosted)
D - CBX-DS
E - Power input (100-277V)
F - Power and data output to fixture (wiring by others)
G - Junction box (by others)
H - Lumenbeam Medium
I - Power and data wiring (by others)

Daisy Chain Layout (DMX/RDM) - wiring detail (first or middle of run) - CE

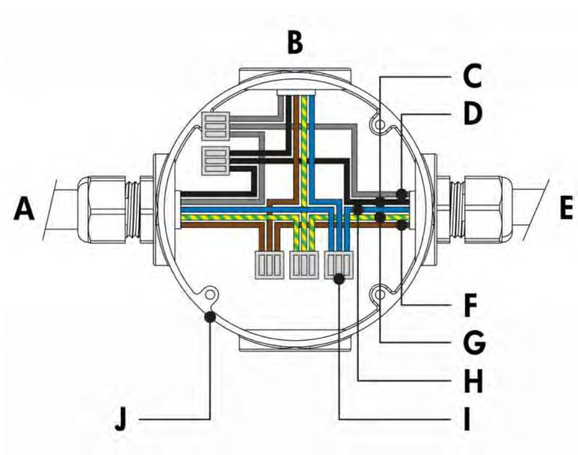

A - From CBX or previous fixture
B - To fixture
C - Data +
D - Data -
E - To next/from previous fixture
F - Live
G - Ground
H - Neutral
I - Terminal connector (by others)
J - Junction box (by others)

Daisy Chain Layout (DMX/RDM) - wiring detail (end of run) - CE

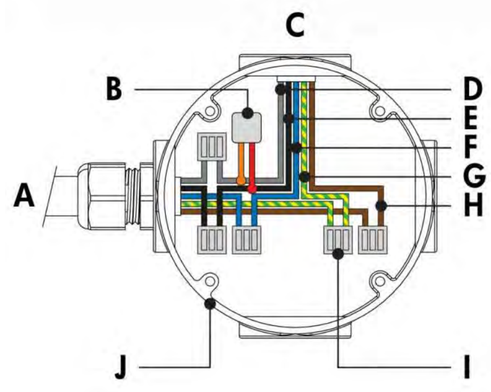

A - From CBX or previous fixture
B - Lumenterminator*
C - To fixture
D - Data -
E - Data +
F - Neutral
G - Ground
H - Live
I - Terminal connector (by others)
J - Junction box (by others)

Daisy Chain Layout (DMX/RDM) - wiring detail (first or middle of run) - CE Class II option

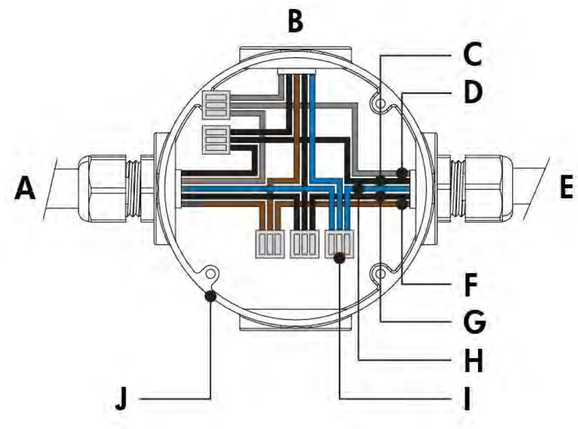

A - From CBX or previous fixture
B - To fixture
C - Data +
D - Data -
E - To next/from previous fixture
F - Live
G - Signal common
H - Neutral
I - Terminal connector (by others)
J - Junction box (by others)

lumenpulse™

11/13 Weston Street, Unit no 13.3.2 London, SE1 3ER GB **T** +44 (0) 2031 765370 info@lumenpulse.com **www.lumenpulsegroup.com**

Lumenpulse Group Inc. reserves the right to make changes to this product at any time without prior notice and such modification shall be effective immediately
2017.11.28 copyright © 2017 Lumenpulse Group Inc.
MG - R30

Specification Sheet

lumenbeam

Medium

WHITE AND STATIC COLOURS

Daisy Chain Layout (DMX/RDM) - wiring detail (end of run) - CE Class II option

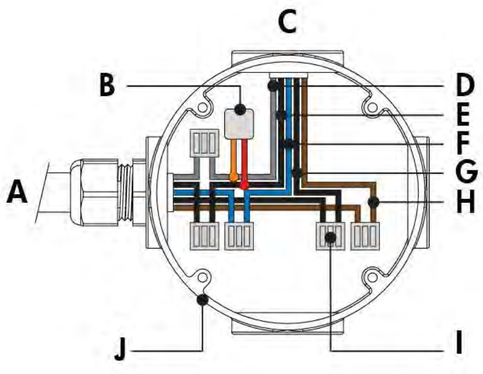

A - From CBX or previous fixture
B - Lumenterminator*
C - To fixture
D - Data -
E - Data +
F - Neutral
G - Signal common
H - Live
I - Terminal connector (by others)
J - Junction box (by others)

Maximum number of fixtures per run (Based on16A maximum, 1,5mm² cable, fixtures spaced 10ft on center, first fixture 50ft from CBX)				
Configuration/Voltage	**120V**	**208V**	**240V**	**277V**
LBM	29	32	32	32

- Consult factory for specific applications and maximum fixture count/cable length recommendations.
- Run length calculations are based on a voltage drop of no more than 25V.
- The DMX/RDM protocol states a maximum of 32 DMX/RDM enabled fixtures on any single run.
- Maximum of 4 DMX/RDM repeaters/CBX cascading in line.
- Maximum of 1 output per CBX-DS.
- Maximum of 3 ft cable length between fixture and next junction box for daisy chain layout.
- Each fixture requires 1 DMX address.
- 1% minimum dimming value.
- 28 watts per fixture.

* DMX terminator is required at the end of each run to maintain data integrity. (2x) DMX lumenterminators included per CBX-DS. See installation instructions for details.

lumenpulse™ 11/13 Weston Street, Unit no 13.3.2 London, SE1 3ER GB **T** +44 (0) 2031 765370 info@lumenpulse.com **www.lumenpulsegroup.com**

Lumenpulse Group Inc. reserves the right to make changes to this product at any time without prior notice and such modification shall be effective immediately
2017.11.28 copyright © 2017 Lumenpulse Group Inc.
MG - R30

Specification Sheet

lumenbeam

Medium

WHITE AND STATIC COLOURS

Accessories (order separately)

Control Boxes

CBX-DS-Power and control box - daisy chain configuration

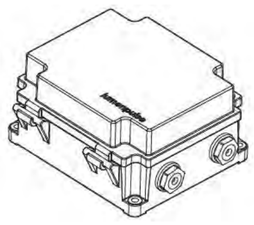

DMX/RDM control box. One power and data output to fixture or fixture run. Ethernet enabled option. Refer to CBX specification sheet for details.

CBX-ST-Power and control box - star configuration

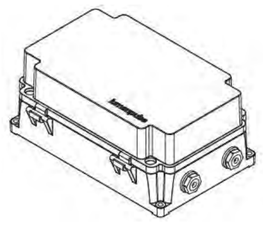

DMX/RDM control box. Up to six power and data outputs to fixtures or fixture runs. Ethernet enabled option. Refer to CBX specification sheet for details.

LDB-Lumentalk Data Bridge



Lumentalk Data Bridge, 0-10V or DMX output. Refer to LDB specification sheet for details.

Control Systems

LTO2-Lumentouch 2.0™



Lumentouch is a wall mount DMX 512 controller keypad.

LCU-Lumencue



Lumencue is a USB / mini SD DMX 512 controller.

Diagnostic and Addressing Tools

LID-LumenID

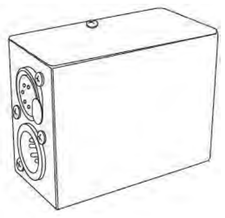

LumenID is a diagnostic and addressing DMX/RDM tool. It must be specified on all DMX applications. Refer to LID specification sheet for details.

LID-LT-LumentalkID

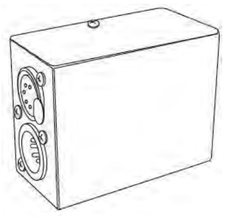

LumentalkID is a diagnostic and addressing tool. It must be specified for all Lumentalk (LT) applications. Refer to LID-LT specification sheet for details.

Lumenpulse Group Inc. reserves the right to make changes to this product at any time without prior notice and such modification shall be effective immediately
2017.11.28 copyright © 2017 Lumenpulse Group Inc.
MG - R30

Specification Sheet

lumenbeam

Medium

WHITE AND STATIC COLOURS

How to order

1	2	3	4	5	6	7	8
LBM							

9	10

1 . Housing

LBM	Lumenbeam™ Medium

2 . Voltage

100	100 volts
120	120 volts
208	208 volts
220	220 volts
240	240 volts
277	277 volts

3 . Colour and Colour Temperature (1)

22K	2200K
27K	2700K
30K	3000K
35K	3500K
40K	4000K
57K	5700K
RD	Red
GR	Green
BL	Blue

4 . Optics

VN	Very Narrow 6°
NS	Narrow Spot 10°
NF	Narrow Flood 20°
FL	Flood 40°
WFL	Wide Flood 60°

5 . Optical Option

LSLH	Linear spread lens horizontal distribution (2)
LSLV	Linear spread lens vertical distribution (2)

6 . Finish

BK	Black Sandtex®
BRZ	Bronze Sandtex®
SI	Silver Sandtex®
WH	Smooth white
BKTX	Textured black
BRZTX	Textured bronze non-metallic
GRATX	Textured medium grey
GRNTX	Textured green
WHTX	Textured white
CC	Custom colour and finish (please specify RAL colour) (3)

7 . Control (4) (5)

NO	On/Off control
DIM	1-10V dimming
DALI	DALI dimming
DMX/RDM	DMX/RDM enabled

8 . Options

SY	Short Yoke
3GV	3G ANSI C136.31 Vibration Rating for bridge applications
CRC	Corrosion-resistant coating for hostile environments (6)

lumenpulse™

11/13 Weston Street, Unit no 13.3.2 London, SE1 3ER GB **T** +44 (0) 2031 765370 info@lumenpulse.com **www.lumenpulsegroup.com**

Lumenpulse Group Inc. reserves the right to make changes to this product at any time without prior notice and such modification shall be effective immediately
2017.11.28 copyright © 2017 Lumenpulse Group Inc.
MG - R30

Specification Sheet

lumenbeam

Medium

WHITE AND STATIC COLOURS

9 . Certification

UL	UL compliant
CE	CE compliant
CEII	CE compliant Class II double insulated

10 . Cable Length [7]

1M	3.3 ft [7] [8]
5M	16.4 ft
10M	32.8 ft
15M	49.2 ft
20M	65.6 ft
30M	98.4 ft

Notes:

[1] Consult factory for availability of static Royal Blue, 6500K and 90+ CRI.

[2] Factory installed, not available for 60° optic. Field adjustable spread lens optical accessory available, order separately.

[3] Lumenpulse offers a wide selection of RAL CLASSIC (K7) colours with a smooth texture and high-gloss finish. Please consult factory for a list of available K7 colours, other RAL textures and glosses, or to match alternate colour charts. Final colour matching results may vary.

[4] Lumentalk system is enabled with LDB accessory, DIM or DMX/RDM must be specified in the order code. See the typical wiring diagrams in the specification sheet for details.

[5] A Lumentranslator and LumentalkID (LIDLT) must be specified for Lumentalk applications. Consult Lumentranslator and Lumentalk pages and specification sheets for details.

[6] Use only when exposed to salt spray and harsh chemicals. This option is not required for normal outdoor exposure.

[7] 1 m cable length is standard unless otherwise specified.

[8] Maximum of 3.3 ft cable length for daisy chain DMX applications with CBX-DS.

lumenpulse™ 11/13 Weston Street, Unit no 13.3.2 London, SE1 3ER GB **T** +44 (0) 2031 765370 info@lumenpulse.com **www.lumenpulsegroup.com**

Lumenpulse Group Inc. reserves the right to make changes to this product at any time without prior notice and such modification shall be effective immediately
2017.11.28 copyright © 2017 Lumenpulse Group Inc.
MG - R30

YG11

Lam Partners
ARCHITECTURAL LIGHTING DESIGN

Pole top luminaires with indirect adjustable light distribution

Type:
BEGA Product:
Project:
Voltage:
Color:
Options:
Modified:

Housing/fitter: Heavy one piece die-cast aluminum optical housing with integrally cast transition "fitter" which slip fits a 3" O.D. pole top or tenon and is secured by six (6) flush, stainless steel set screws. The housing gracefully supports two (2) ¾" diameter stainless steel struts located at 180° as well as a die-cast aluminum diffuser retaining ring. All components function and appear as a unified design. Die castings are marine grade, copper free (≤ 0.3% copper content) A360.0 aluminum alloy.

Enclosure: ¾" thick, machined tempered crystal clear optical glass with a high temperature-rated one piece molded silicone rubber gasket encloses the precise, stippled pure aluminum, wide flood distribution reflector. The glass retaining ring is secured by two (2) hidden stainless steel hex head access screws.

Reflective disk: 31½" diameter x ¼" thick aluminum plate secured by two (2) die-cast aluminum fixed clamping "saddles" which receive the stainless steel struts. Adjustable up to 30° in 5° increments in one direction. A ¼" wide by ⅛" deep "drip" channel is provided around the edge of the underside disk.

Electrical: 36.4W LED luminaire, 43 total system watts, -30°C start temperature. Integral 120V through 277V electronic LED driver, 0-10V dimming. LED module(s) are available from factory for easy replacement. Standard LED color temperature is 3000K with an 85 CRI. Available in 4000K (85 CRI); add suffix K4 to order.

Note: LEDs supplied with luminaire. Due to the dynamic nature of LED technology, LED luminaire data on this sheet is subject to change at the discretion of BEGA-US. For the most current technical data, please refer to www.bega-us.com.

Finish: All BEGA standard finishes are polyester powder coat with minimum 3 mil thickness. Available in four standard BEGA colors: Black (BLK); White (WHT); Bronze (BRZ); Silver (SLV). To specify, add appropriate suffix to catalog number. Custom colors supplied on special order.

CSA certified to U.S. and Canadian standards, suitable for wet locations. Protection class IP65

Weight: 33 lbs.

Effective Projection Area (EPA): 3.2 ft²

Luminaire Lumens: 1742
Tested in accordance with LM-79-08

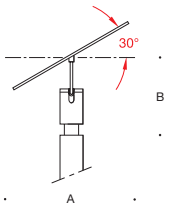

	Lamp	LEED	A	B
77 208	36.4 W LED	LZ-3	31½	19⅞



BEGA-US 1000 BEGA Way, Carpinteria, CA 93013 (805) 684-0533 FAX (805) 566-9474 www.bega-us.com
©copyright BEGA-US 2016 Updated 08/16

Specification Sheet

lumenfacade

YG12 Lam Partners

LOG

WHITE AND STATIC COLORS

Project Name _____ **Qty** _____

Type _____ **Catalog / Part Number** _____



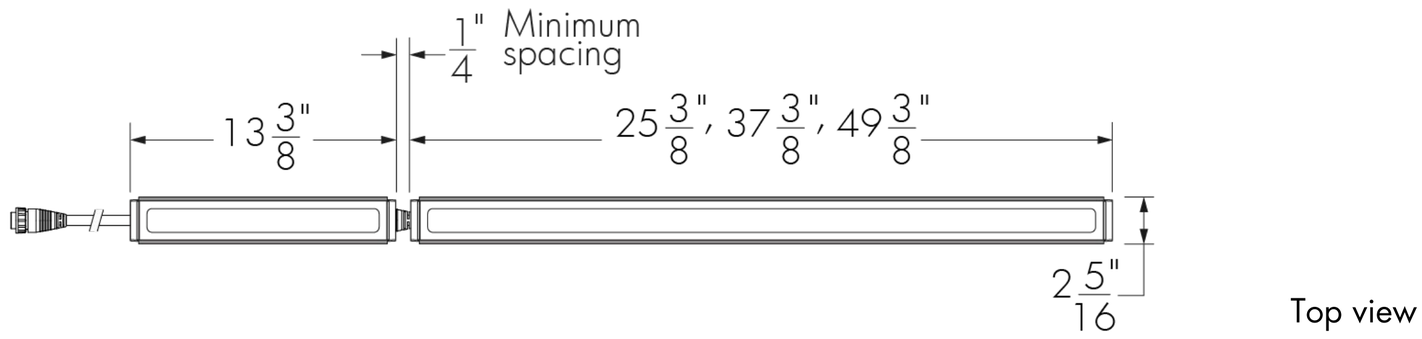

Top view

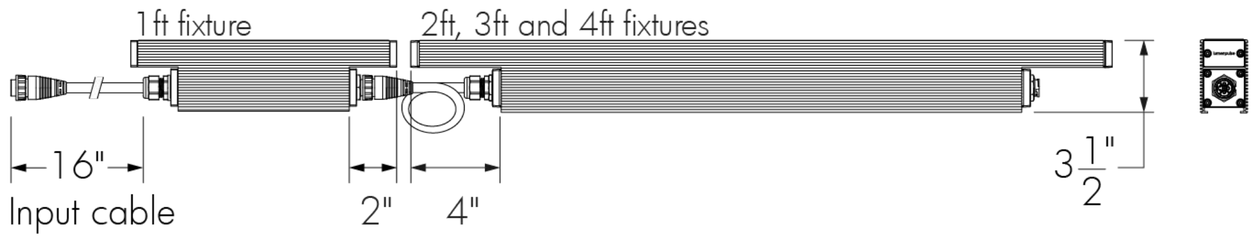

End-to-end (ETE) option shown

Front and side views

Photometric Summary

	Delivered output (lm)	Intensity (peak cd)
WW	3,592	5,159
8°x8°	4,045	77,896
10°x10°	3,768*	38,346*
10°x30°	3,830	30,056
10°x60°	3,692	19,654
10°x90°	3,576	7,897
30°x30°	3,765	14,726
30°x60°	3,862*	5,119*
60°x60°	3,447*	3,015*
90°x90°	3,592	1,886

Based on HO 4000K, 4ft [1219mm] configuration.
Photometric performance is measured in compliance with IESNA LM-79-08.
*Estimated. Consult website for the latest photometric files.

Optics

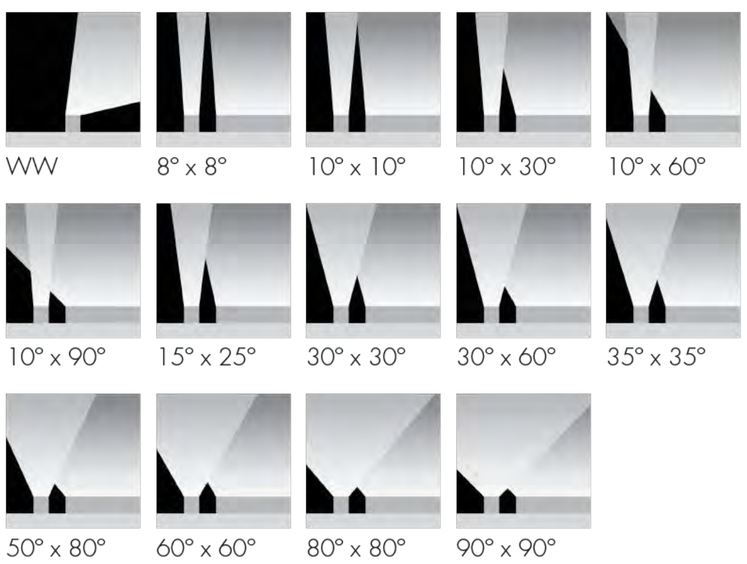

Description

The Lumenfacade is a high-performance linear LED luminaire for grazing or floodlighting exterior walls and facades. Featuring second generation LED technology, the luminaire is available in 12 in, 24 in, 36 in or 48 in sections, and can be configured with a wide number of options, including: optics for grazing or flood lighting; a choice of outputs (ASHRAE 5 W/ft, RO 8.5 W/ft or HO 15.25 W/ft); various color temperatures or static colors; various mounting options, finishes, accessories and controls. The Lumenfacade is also available with a unique asymmetric wallwash distribution, providing exceptional uniformity and brightness for walls and signage.

Features

Color and Color Temperature	2200K, 2700K, 3000K, 3500K, 4000K, Red, Green, Blue
Length (nominal)	12 in, 24 in, 36 in, 48 in
Optics	Asymmetric Wallwash, 8° x 8°, 10° x 10°, 10° x 30°, 10° x 60°, 10° x 90°, 15° x 25°, 30° x 30°, 30° x 60°, 35° x 35°, 50° x 80°, 60° x 60°, 80° x 80°, 90° x 90°
Options	End-to-end configuration (factory installed 16 in black input cable included), Corrosion-resistant coating for hostile environments, 3G ANSI C136.31 Vibration Rating for bridge applications, CE (certification covers European Economic Area)
Power Consumption	5 W/ft (meets ASHRAE standards for linear lighting on building facades - not available for 12 in fixture lengths), 8.5 W/ft (RO version), 15.25 W/ft (HO version), Typically 20% higher for 12 in fixture lengths
Warranty	5-year limited warranty

lumenpulse™

1220 Marie-Victorin Blvd., Longueuil, QC J4G 2H9 CA **T** United States 617.307.5700 | Canada 1.877.937.3003 | 514.937.3003 **F** 514.937.6289
info@lumenpulse.com **www.lumenpulse.com** **www.lumenpulse.com/products/1046/lumenfacade**

Lumenpulse Group Inc. reserves the right to make changes to this product at any time without prior notice and such modification shall be effective immediately
2019.01.10 copyright © 2019 Lumenpulse Group Inc.
MG - R66

Colors and Color Temperatures

2200K 2700K 3000K 3500K 4000K

Red Green Blue

Controls

ON/OFF 0-10V DALI

lumentalk DMXrdm EcoSystem Enabled

Ratings

IP66 IK07*

*asymmetric wallwash lens is IK06 rated

Certifications

cULus CE RoHS 5 YEARS lumenpulse

Performance

Illuminance at Distance	Minimum 1 fc at 140 ft (HO 4000K, 48 in fixture, 10° x 60°, DMX/RDM)
Color Consistency	2 SDCM, 3 SDCM (2200K)
Color Rendering	Minimum CRI 80
Lumen Maintenance	L70 280,000 hrs, L95 35,000 hrs

Physical

Housing Material	Low copper content extruded aluminum
Lens Material	Clear tempered glass
Hardware Material	Stainless steel
End Cap Material	Machined aluminum
Gasket Material	Silicone
Surface Finish	Electrostatically applied polyester powder coat
Weight	12 in: 4.5 lbs, 24 in: 7 lbs, 36 in: 10.5 lbs, 48 in: 14 lbs

Electrical and control

Voltage	100 to 277 volts
Fixture Cable	Power and data in one cable, End-to-end option (ETE): 16 in black input cable (no jumper cable needed for minimum spacing between two fixtures)
Leader Cable Conductors	5C #16-5
Maximum Cable and Fixture Run Length	252 ft (On/Off, 277V, RO version), 164 ft (On/Off, 277V, HO version)
Control	On/Off control, Lumentalk, 0-10V dimming, DALI dimming, Lutron® EcoSystem® Enabled dimming, DMX/RDM enabled
Resolution (DMX/RDM)	Per foot or per fixture (configured with LumenID V3 software), 8-bit or 16-bit

Environmental

Storage Temperature	-40 °F to 185 °F (device must reach start-up temperature value before operating)
Start-up Temperature	-13 °F to 122 °F
Operating Temperature	-40 °F to 122 °F
Ingress Protection Rating	IP66
Impact Resistance Rating	IK07 (asymmetric wallwash lens is IK06 rated)

lumenpulse™

1220 Marie-Victorin Blvd., Longueuil, QC J4G 2H9 CA **T** United States 617.307.5700 | Canada 1.877.937.3003 | 514.937.3003 **F** 514.937.6289
info@lumenpulse.com **www.lumenpulse.com** **www.lumenpulse.com/products/1046/lumenfacade**

Lumenpulse Group Inc. reserves the right to make changes to this product at any time without prior notice and such modification shall be effective immediately
2019.01.10 copyright © 2019 Lumenpulse Group Inc.
MG - R66

Accessories (order separately)

Optical Accessories	Lumenfacade Radial Louver
Cables	Leader cable (standard), Jumper cable (standard), Leader cable (ETE), Jumper cable (ETE)
Control Boxes	DMX/RDM enabled (daisy chain or star configuration), Ethernet enabled (daisy chain or star configuration), Lumentalk Data Bridge
Control Systems	Lumentone™ 2, Pharos® kit
Diagnostic and Addressing Tools	LumenID, LumentalkID

Lumenpulse Group Inc. reserves the right to make changes to this product at any time without prior notice and such modification shall be effective immediately
2019.01.10 copyright © 2019 Lumenpulse Group Inc.
MG - R66

Asymmetric wallwash optic details

WWLF - Asymmetric wallwash optic, left feed

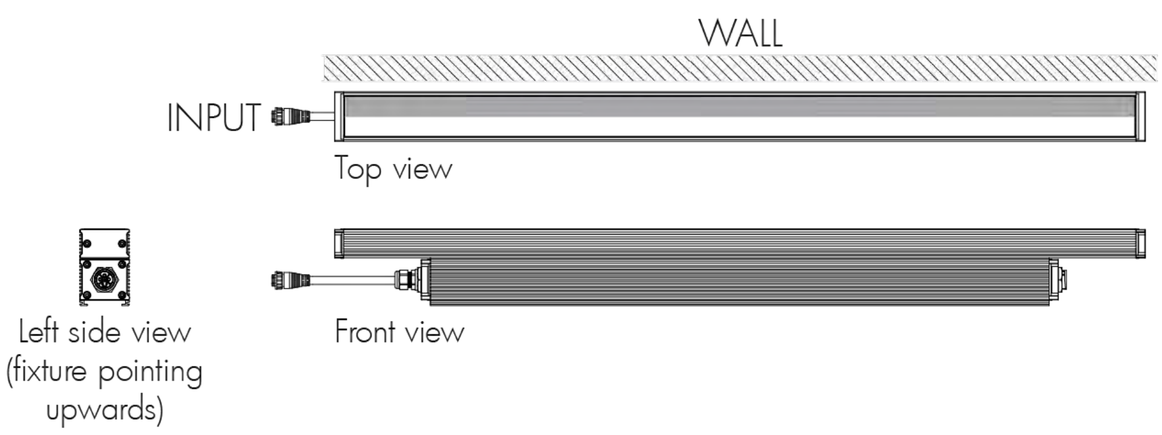

WWRF - Asymmetric wallwash optic, right feed

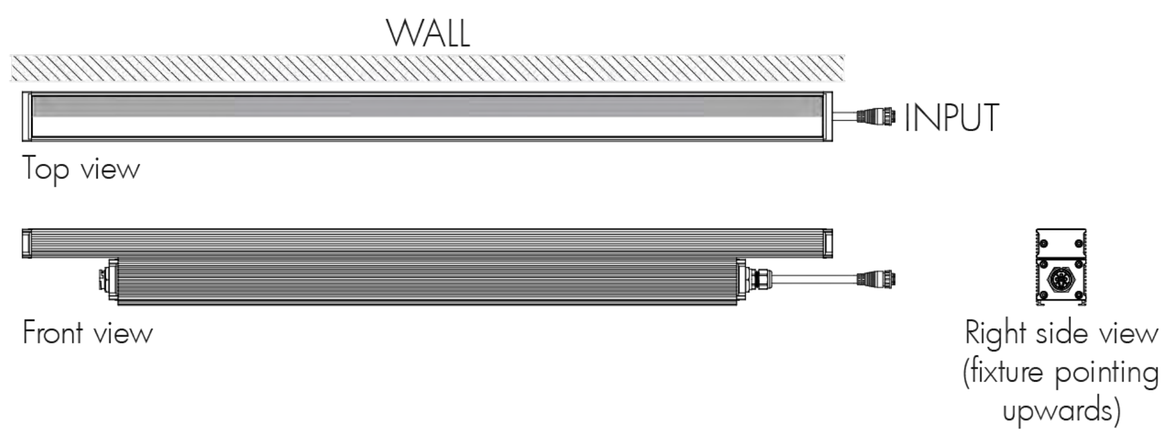

- Always position frosted side toward the wall.
- Fixture's feeding side is based on uplight installations. Feeding sides are reversed when fixture is used in a downlight application.
- Recommended setback from wall is 1/10 of the wall height. Example: 2 ft setback for a 20 ft wall.

Mounting options

Surface Mount

SAM - Slim Adjustable Mounting

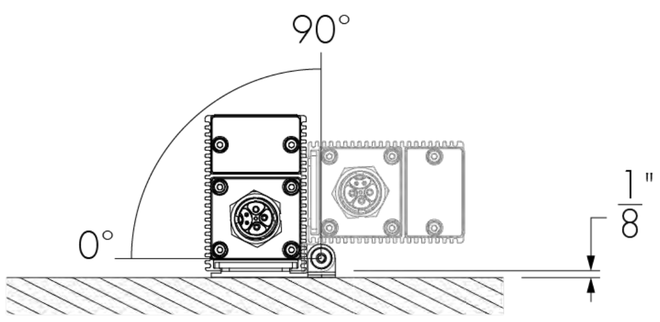

SAM - Mounting hole pattern

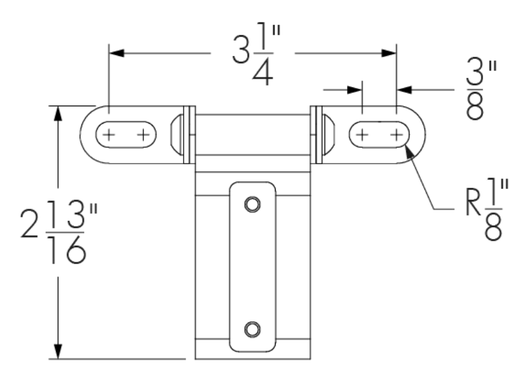

UMP - Fixed Mounting

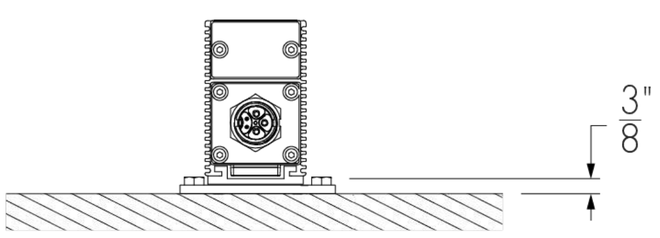

UMP - Mounting hole pattern

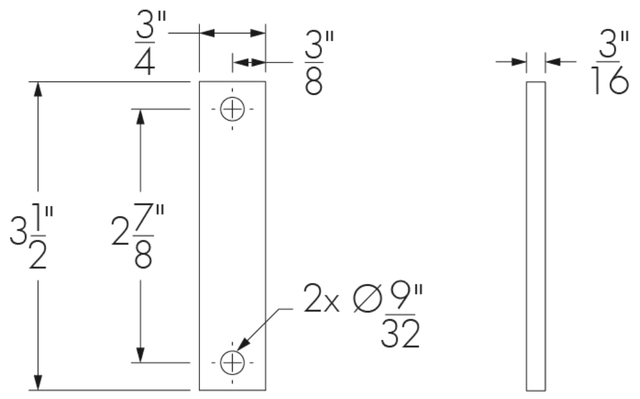

Lumenpulse Group Inc. reserves the right to make changes to this product at any time without prior notice and such modification shall be effective immediately
2019.01.10 copyright © 2019 Lumenpulse Group Inc.
MG - R66

Wall Mount

UMAS - Universal Adjustable Mounting

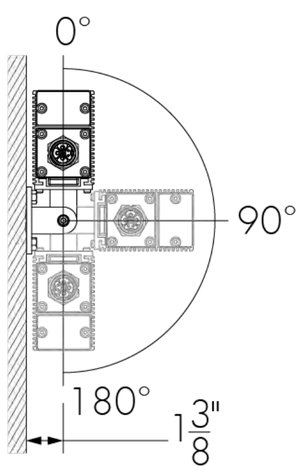

UMAS - Mounting hole pattern

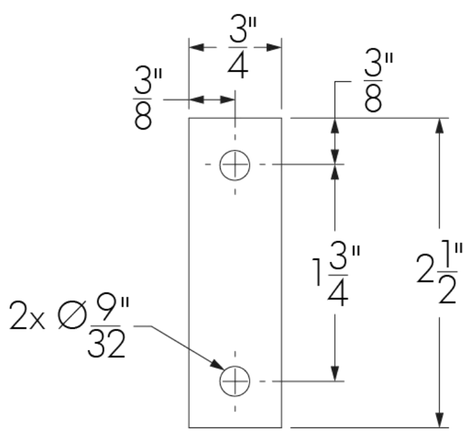

WAM2 - Adjustable Wall Mounting 2 in

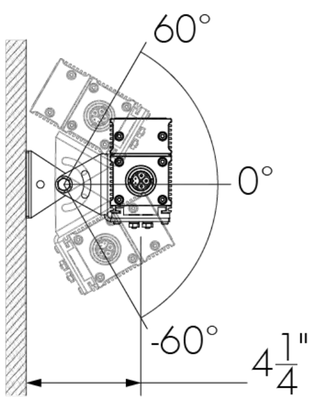

WAM2 - Mounting hole pattern

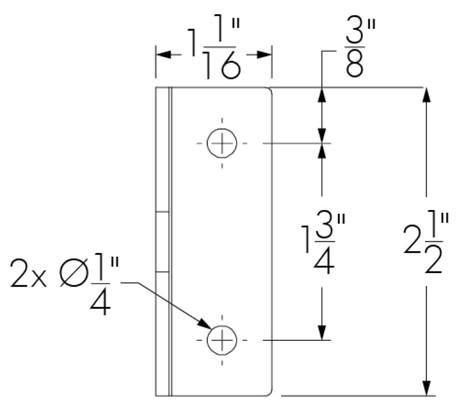

WAM6 - Adjustable Extended Arm Mounting 6 in

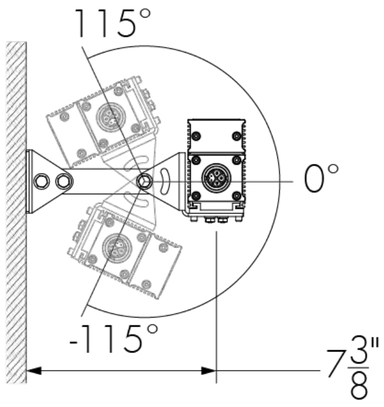

WAM6 - Mounting hole pattern

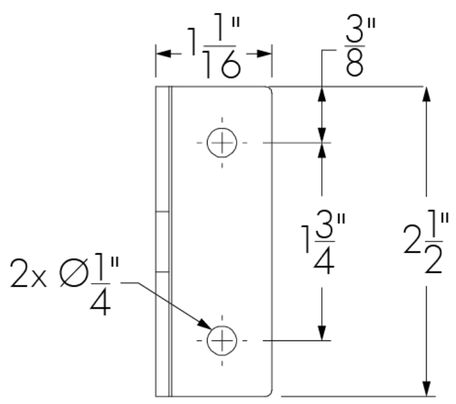

WAM12 - Adjustable Extended Arm Mounting 12 in

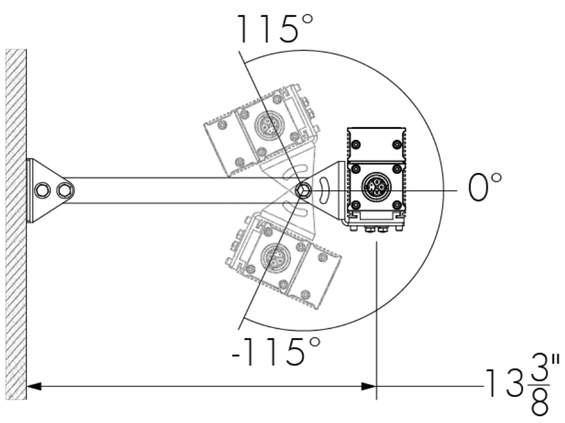

WAM12 - Mounting hole pattern

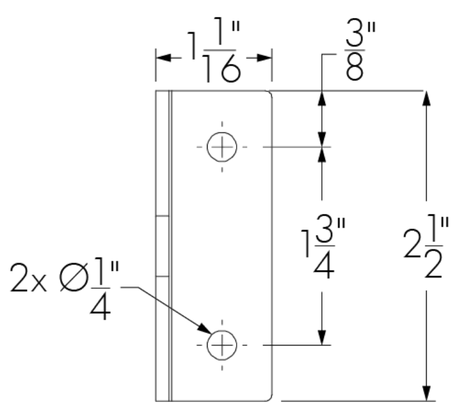

WAM18 - Adjustable Extended Arm Mounting 18 in

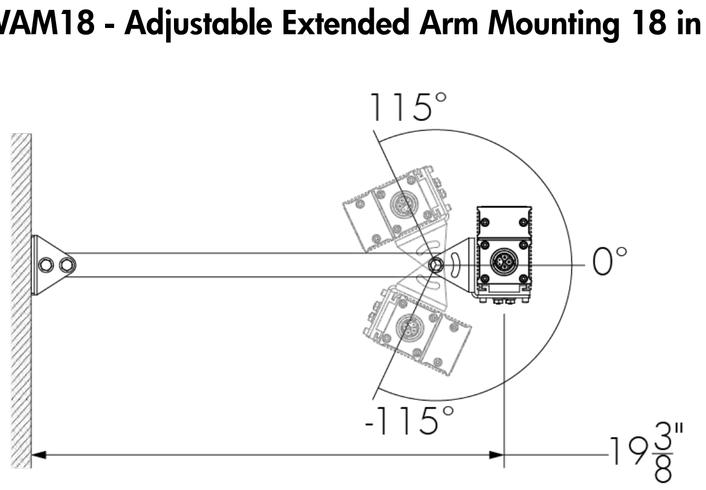

WAM18 - Mounting hole pattern

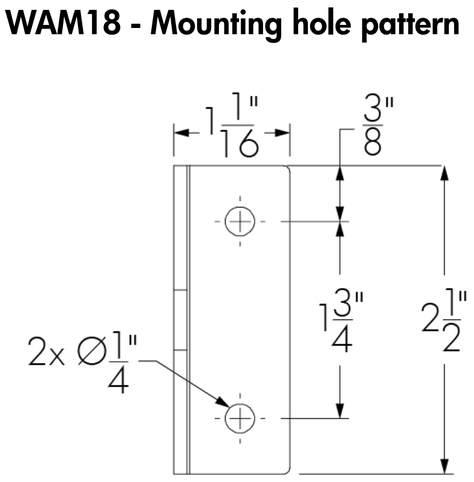

Lumenpulse Group Inc. reserves the right to make changes to this product at any time without prior notice and such modification shall be effective immediately
2019.01.10 copyright © 2019 Lumenpulse Group Inc.
MG - R66

End-to-end configuration option (ETE)

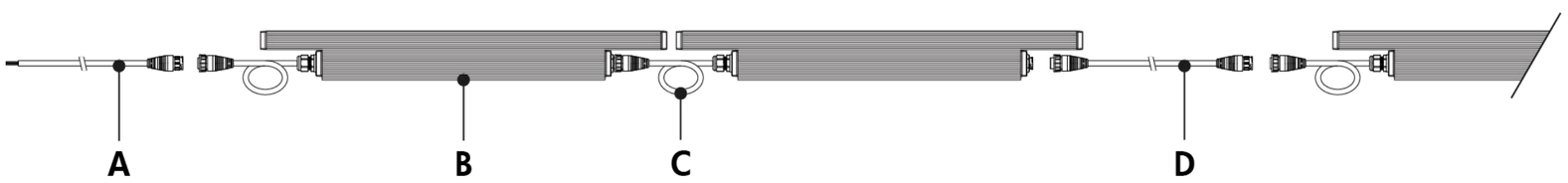

A - ETE leader cable (order separately)
B - Lumenfacade with ETE option
C - ETE 16 in black input cable
D - ETE jumper cable (order separately)

Includes a factory installed 16 in black input cable. A jumper cable is not required for minimum spacing between two end-to-end (ETE) fixtures. An ETE jumper cable is required only if a longer distance between two adjacent ETE fixtures is needed, or to connect two continuous runs of ETE fixtures together.

Optical accessories (order separately)

LOGRD - Radial louver for Lumenfacade

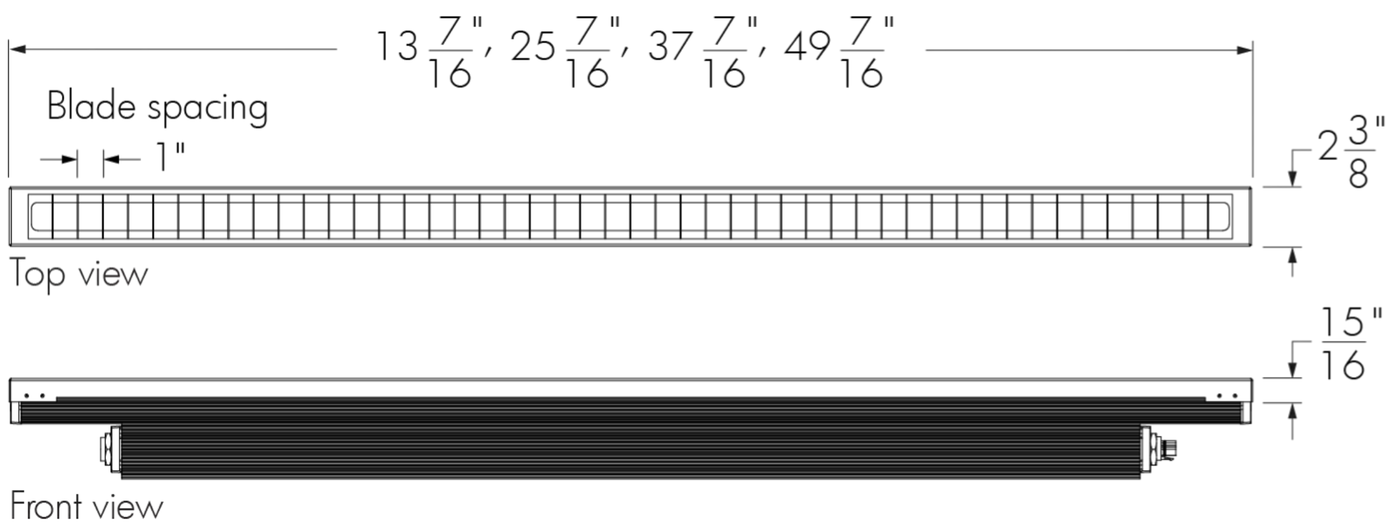

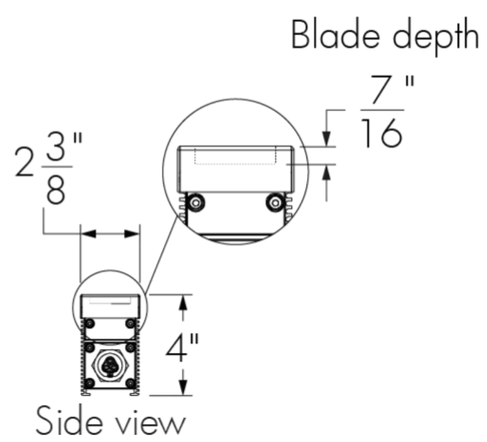

LOGRD-**LENGTH-FINISH-OPTIONS**

Please specify:
LENGTH: 12 in, 24 in, 36 in or 48 in; **FINISH**: BK - Black Sandtex®, BRZ - Bronze Sandtex®, SI - Silver Sandtex®, WH - Smooth white or CC - custom color and finish (please specify RAL color); **OPTIONS**: CRC - Corrosion-resistant coating for hostile environments

- The addition of a louver will affect beam distribution. Consult factory for application support.
- Not suitable for asymmetric wallwash optic.

Lumenpulse Group Inc. reserves the right to make changes to this product at any time without prior notice and such modification shall be effective immediately
2019.01.10 copyright © 2019 Lumenpulse Group Inc.
MG - R66

Cables (order separately)

LOGLC - Leader cable for Lumenfacade



Standard construction
LOGLC-**CERTIFICATION**-STD-**LENGTH-CABLE COLOR**



End-to-end (ETE) option
LOGLC-**CERTIFICATION**-ETE-**LENGTH-CABLE COLOR**

Please specify:
CERTIFICATION: UL or CE; **LENGTH**: 10 ft, 25 ft, 50 ft, 100 ft, 150 ft or 200 ft; **CABLE COLOR**: black or white (connectors are black as standard; ETE fixture input cables are black as standard)

- Suitable for dimming/data and non-dimming applications.
- Sealing end cap is mandatory for any unused connector. One (1) included with every leader cable.
- Consult Lumenfacade leader cable specification sheet for details.

LOGJC - Jumper cable for Lumenfacade

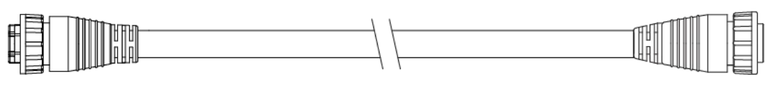

Standard construction
LOGJC-**CERTIFICATION**-STD-**LENGTH-CABLE COLOR**

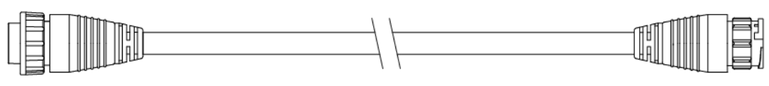

End-to-end (ETE) option
LOGJC-**CERTIFICATION**-ETE-**LENGTH-CABLE COLOR**

Please specify:
CERTIFICATION: UL or CE; **LENGTH**: 1 ft (available for ETE option only), 2 ft to 30 ft (available in 1 ft increments) or 50 ft; **CABLE COLOR**: black or white (connectors are black as standard; ETE fixture input cables are black as standard)

- Suitable for dimming/data and non-dimming applications.
- Consult Lumenfacade jumper cable specification sheet for details.

Lumenpulse Group Inc. reserves the right to make changes to this product at any time without prior notice and such modification shall be effective immediately
2019.01.10 copyright © 2019 Lumenpulse Group Inc.
MG - R66

Control boxes (order separately)

CBX-DMX/RDM - DMX/RDM enabled (daisy chain or star configuration)

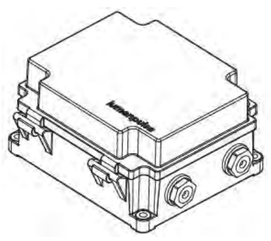

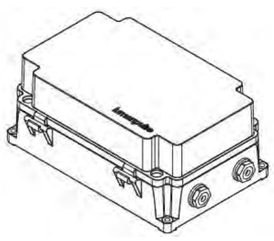

DMX/RDM control box. Up to six power and data outputs to fixtures or fixture runs. Consult CBX specification sheet and installation instructions for details. Lumenterminators provided with CBX (2x for daisy chain configuration, 6x for star configuration), consult factory to order spares.

CBX-ENET - Ethernet enabled (daisy chain or star configuration)

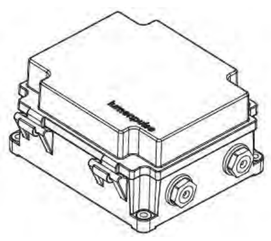

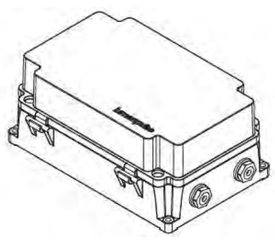

Ethernet control box. Up to four power and data outputs to fixture or fixture runs. Consult Ethernet CBX specification sheet and installation instructions for details.

LDB - Lumentalk Data Bridge

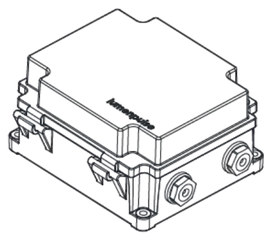

Lumentalk Data Bridge, 0-10V or DMX output. Consult LDB specification sheet for details.

Control systems (order separately)

LTN2 - Lumentone™ 2

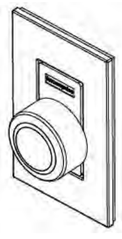

Lumentone 2 is a simple pre-programmed DMX 512 controller with a push button rotary dial and live feedback.

PHAROS - Pharos® kit

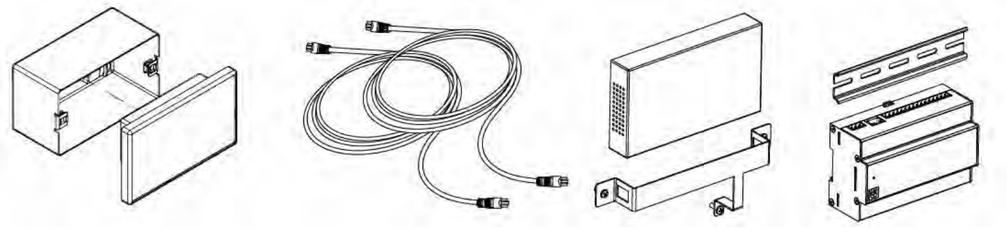

The Pharos kit, available for 1 or 2 DMX universes, allows for complete control of large lighting installations. 2 DMX universes kit shown.

Diagnostic and addressing tools (order separately)

LID - LumenID



LumenID is a diagnostic and addressing DMX/RDM tool. It must be specified on all DMX applications. Consult LID specification sheet for details.

LID-LT - LumentalkID

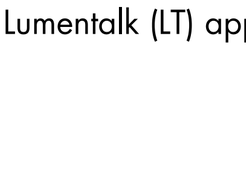

LumentalkID is a diagnostic and addressing tool. It must be specified for all Lumentalk (LT) applications. Consult LID-LT specification sheet for details.

Lumenpulse Group Inc. reserves the right to make changes to this product at any time without prior notice and such modification shall be effective immediately
2019.01.10 copyright © 2019 Lumenpulse Group Inc.
MG - R66

Resolution details

Resolution per foot: each 12 in section is addressed independently
DMX addresses:

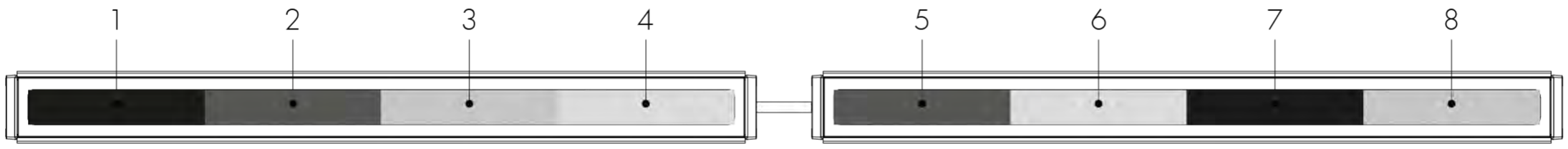

Resolution per fixture: each fixture is addressed independently
DMX addresses:

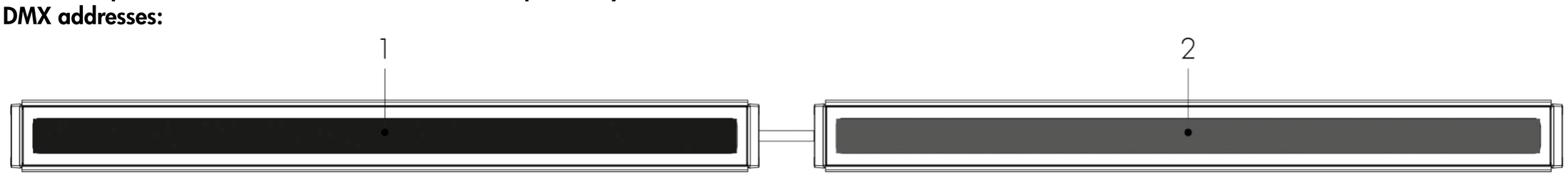

- 48 in fixtures shown.
- Applicable for DMX/RDM control option only. Fixture resolution can be configured on-site within the LumenID V3 software. A DMX/RDM enabled CBX is required.

Typical wiring diagrams

Wiring color code

UL Color Code	USE
Green	Ground
Black	Line
White	Line/Neutral
Red or Purple	0-10V / Data +
Orange	0-10V / Data -

On/Off control (NO)

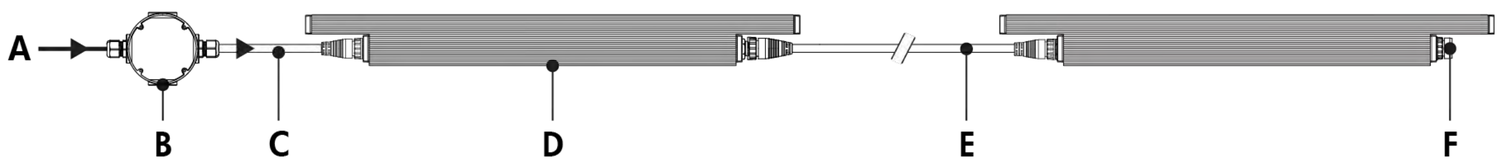

A - Power input (100-277V, wiring by others)
B - Junction box (by others)
C - Leader cable (LOGLC)
D - Lumenfacade
E - Jumper cable (LOGJC)
F - Sealing end cap

On/Off control (NO) - wiring detail

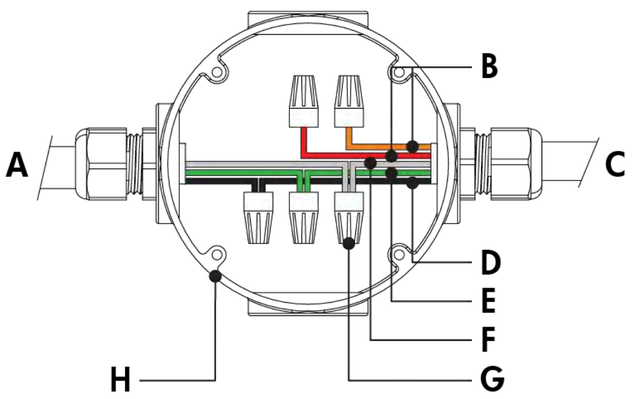

A - Power input
B - Not required
C - To fixture
D - Line
E - Ground
F - Line/Neutral
G - Wire-nuts (by others)
H - Junction box (by others)

- Consult factory for specific applications and maximum fixture count/cable length recommendations.
- ASHRAE version (not available for 12 in fixture lengths): 5 W/ft; Regular Output version: 8.5 W/ft; High Output version: 15.25 W/ft.

Lumenpulse Group Inc. reserves the right to make changes to this product at any time without prior notice and such modification shall be effective immediately
2019.01.10 copyright © 2019 Lumenpulse Group Inc.
MG - R66

Lumentalk (LT)

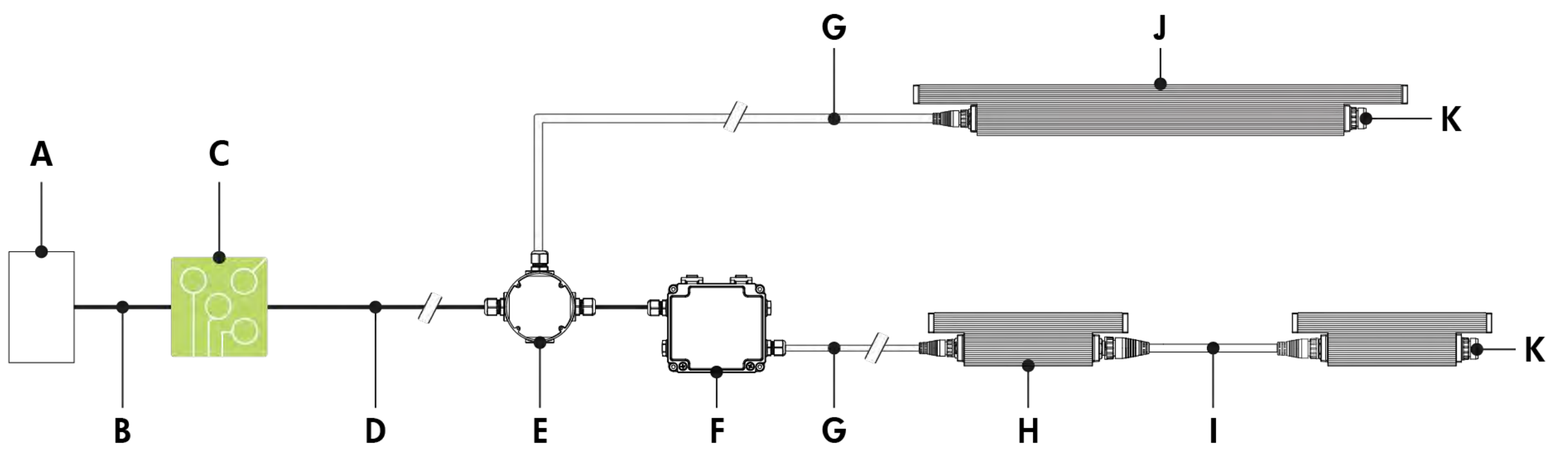

A - Dimmer/controller (order separately from Lumenpulse, or by others)
B - Data wiring (by others)
C - Lumentranslator (LTL-010, -DMX, -TRIAC, -DALI)
D - Power line (120-277V AC, wiring by others)
E - Junction box (by others)
F - Lumentalk Data Bridge (LDB-DIM or LDB-DMX)
G - Leader cable (LOGLC)
H - Lumenfacade 12 in
I - Jumper cable (LOGJC)
J - Lumenfacade (24 in, 36 in or 48 in fixture lengths)
K - Sealing end cap

Lumentalk (LT) - wiring detail

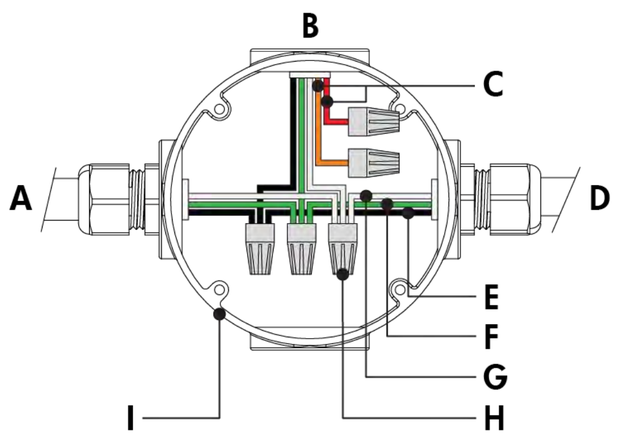

A - Power input (control over power line via Lumentalk system)
B - To fixture
C - Not required
D - To Lumentalk Data Bridge (for run lengths with 12 in fixtures)
E - Line
F - Ground
G - Line/Neutral
H - Wire-nuts (by others)
I - Junction box (by others)

- Consult factory for specific applications and maximum fixture count/cable length recommendations.
- Lumentalk Data Bridge required for 12 in fixture lengths, see LDB installation instructions for details.

- For applications with all fixtures controlled as 1 zone: fixtures and Lumentalk Data Bridge must be specified as DIM. Maximum of 10 fixtures per LDB-DIM, consult factory for applications that require additional capabilities.
- For applications with fixtures controlled individually: fixtures and Lumentalk Data Bridge must be specified as DMX, 2-step commissioning process: 1 - DMX/RDM system using LumenID software and a LID, 2 - Lumentalk system using LumentalkID software and a LID-LT. Maximum of 32 fixtures per LDB-DMX. Consult factory for details.

- For DMX applications: 1 DMX controller per Lumentalk network, maximum of 48 DMX channels per Lumentalk network (minimum step transition update rate is 1 second, minimum fade time between two colors is 1 minute). Consult factory for applications that require additional capabilities.
- Maximum of 1 transmitter (Lumentranslator or Lumenlink) per system.
- No third party fixtures allowed on the same circuit.
- Consult factory for DALI Lumentalk applications.
- 1% minimum dimming value.
- ASHRAE version (not available for 12 in fixture lengths): 5 W/ft; Regular Output version: 8.5 W/ft; High Output version: 15.25 W/ft.

Lumenpulse Group Inc. reserves the right to make changes to this product at any time without prior notice and such modification shall be effective immediately
2019.01.10 copyright © 2019 Lumenpulse Group Inc.
MG - R66

0-10V dimming (DIM)

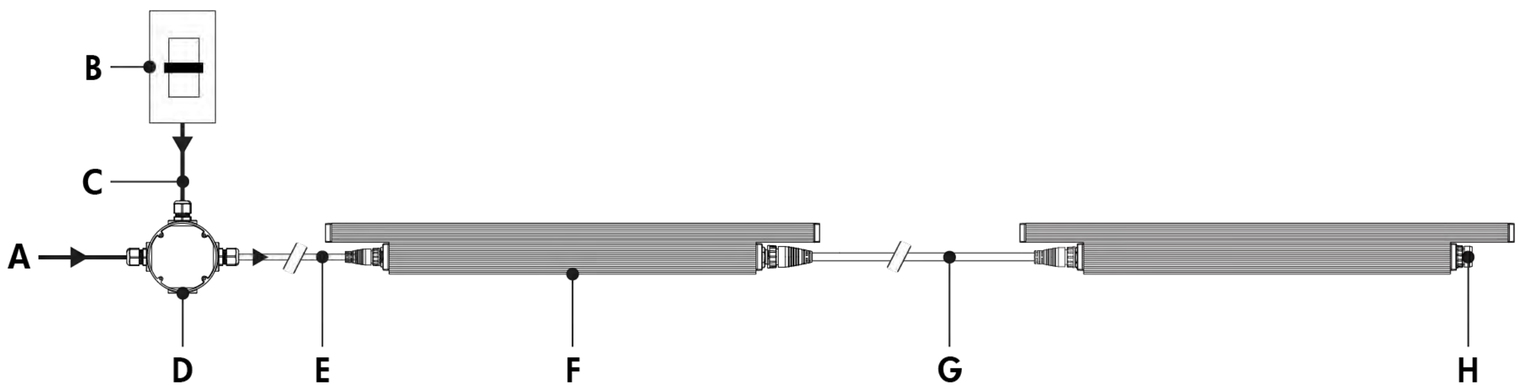

A - Power input (100-277V, wiring by others)
B - Dimmer (by others)
C - Data wiring (by others)
D - Junction box (by others)
E - Leader cable (LOGLC)
F - Lumenfacade
G - Jumper cable (LOGJC)
H - Sealing end cap

0-10V dimming (DIM) - wiring detail

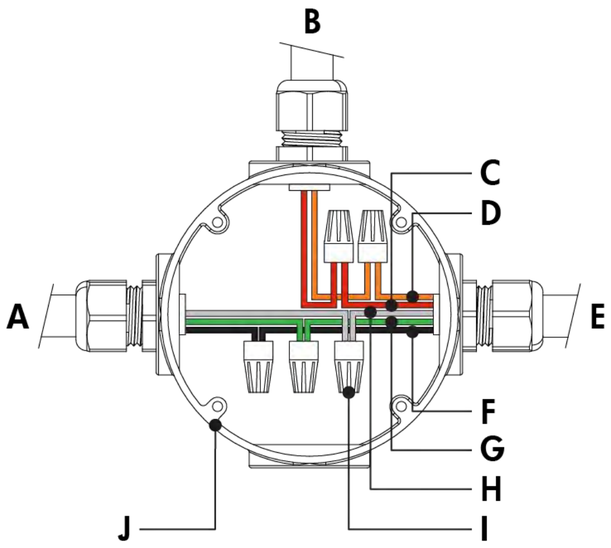

A - Power input
B - From dimmer (by others)
C - 0-10 V +
D - 0-10 V -
E - To fixture
F - Line
G - Ground
H - Neutral
I - Wire-nuts (by others)
J - Junction box (by others)

- Consult factory for specific applications and maximum fixture count/cable length recommendations.
- 0-10V mA ratings: passive dimmer (Current Sink): 3 mA per fixture, active dimmer (Current Source): 0.5 mA per fixture.
- 10% minimum dimming value.
- ASHRAE version (not available for 12 in fixture lengths): 5 W/ft; Regular Output version: 8.5 W/ft; High Output version: 15.25 W/ft.

lumenpulse™

1220 Marie-Victorin Blvd., Longueuil, QC J4G 2H9 CA **T** United States 617.307.5700 | Canada 1.877.937.3003 | 514.937.3003 **F** 514.937.6289
info@lumenpulse.com **www.lumenpulse.com** **www.lumenpulse.com/products/1046/lumenfacade**

Lumenpulse Group Inc. reserves the right to make changes to this product at any time without prior notice and such modification shall be effective immediately
2019.01.10 copyright © 2019 Lumenpulse Group Inc.
MG - R66

DALI dimming (DALI)

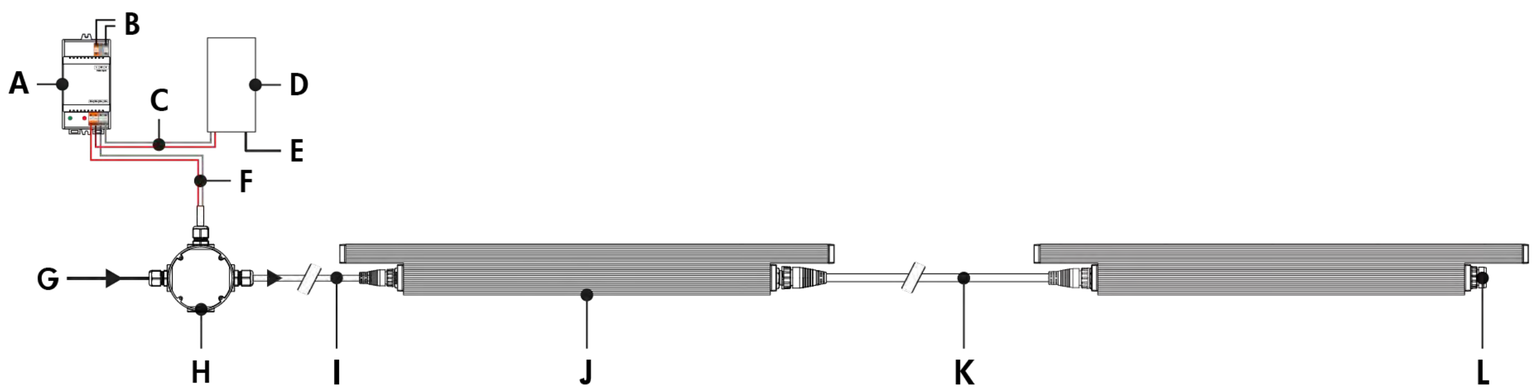

A - DALI bus power supply (by others)
B - Power input for DALI bus power supply (wiring by others)
C - Data output to DALI controller (wiring by others)
D - DALI controller (by others)
E - Power input for DALI controller (wiring by others)
F - Data output to fixture (wiring by others)
G - Power input (100-277V, wiring by others)
H - Junction box (by others)
I - Leader cable (LOGLC)
J - Lumenfacade
K - Jumper cable (LOGJC)
L - Sealing end cap

DALI dimming (DALI) - wiring detail

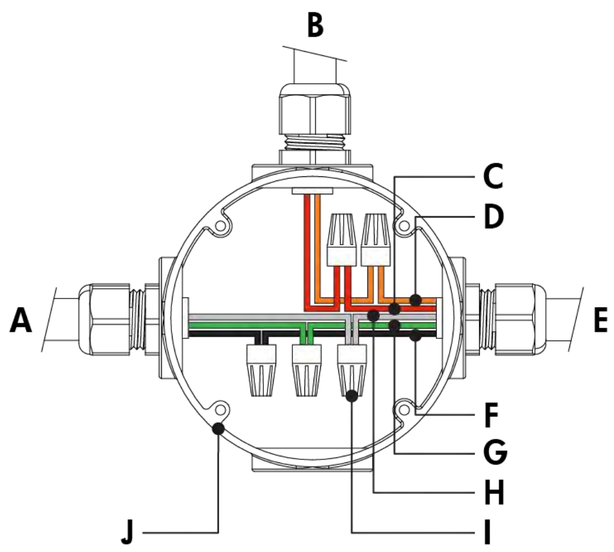

A - Power input
B - From DALI controller (by others)
C - Data +
D - Data -
E - To fixture
F - Line
G - Ground
H - Neutral
I - Wire-nuts (by others)
J - Junction box (by others)

- Consult factory for specific applications and maximum fixture count/cable length recommendations.
- Maximum of 64 DALI fixtures per DALI loop.
- 1% minimum dimming value.
- ASHRAE version (not available for 12 in fixture lengths): 5 W/ft; Regular Output version: 8.5 W/ft; High Output version: 15.25 W/ft.

Lumenpulse Group Inc. reserves the right to make changes to this product at any time without prior notice and such modification shall be effective immediately
2019.01.10 copyright © 2019 Lumenpulse Group Inc.
MG - R66

Lutron® EcoSystem® Enabled dimming (ES)

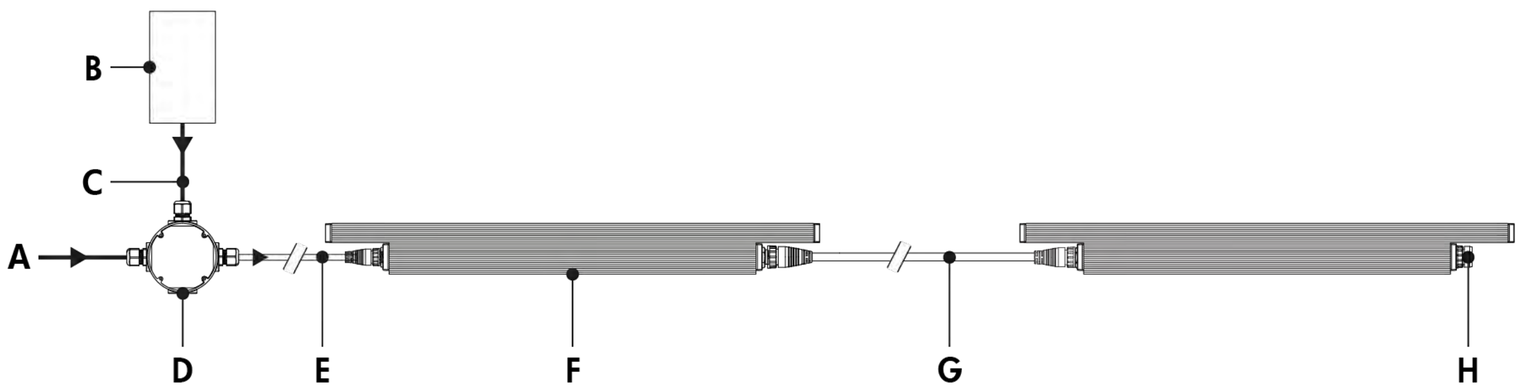

A - Power input (100-277V, wiring by others)
B - Lutron® EcoSystem® controller (by others)
C - Data wiring (by others)
D - Junction box (by others)
E - Leader cable (LOGLC)
F - Lumenfacade (24 in, 36 in or 48 in fixture lengths)
G - Jumper cable (LOGJC)
H - Sealing end cap

Lutron® EcoSystem® Enabled dimming (ES) - wiring detail

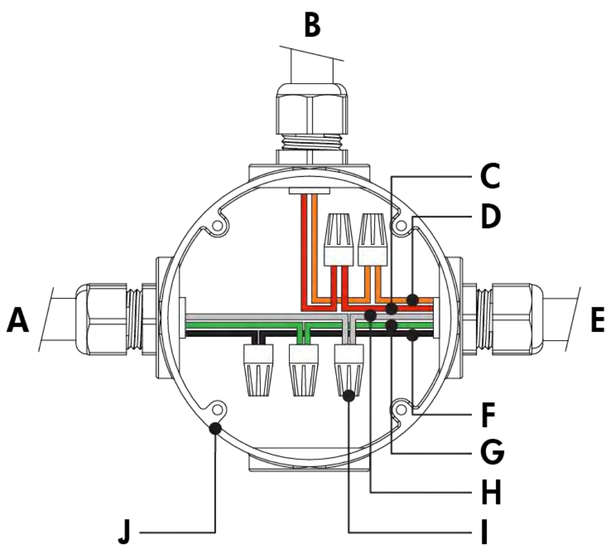

A - Power input
B - From Lutron® EcoSystem® controller (by others)
C - Data +
D - Data -
E - To fixture
F - Line
G - Ground
H - Neutral
I - Wire-nuts (by others)
J - Junction box (by others)

- Consult factory for specific applications and maximum fixture count/cable length recommendations.
- Each Lutron® EcoSystem® enabled fixture has its own address; for the example shown, there are a total of 2 EcoSystem® addresses.
- 1% minimum dimming value.
- ASHRAE version (not available for 12 in fixture lengths): 5 W/ft; Regular Output version: 8.5 W/ft; High Output version: 15.25 W/ft.

Lumenpulse Group Inc. reserves the right to make changes to this product at any time without prior notice and such modification shall be effective immediately
2019.01.10 copyright © 2019 Lumenpulse Group Inc.
MG - R66

Star Layout (DMX/RDM)

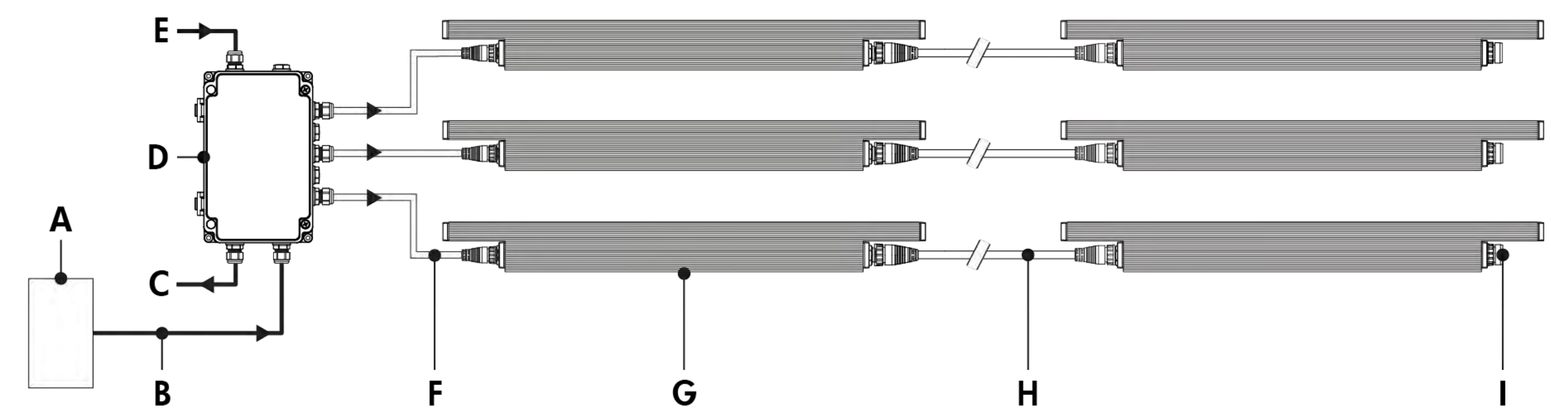

A - DMX/RDM controller (order separately from Lumenpulse, or by others)
B - Data input (Belden 9841 or equivalent, by others)
C - Data output to next CBX (optional, not isolated/not boosted)
D - CBX-ST
E - Power input (100-277V, wiring by others)
F - Leader cable (LOGLC)
G - Lumenfacade
H - Jumper cable (LOGJC)
I - Sealing end cap

Daisy Chain Layout (DMX/RDM)

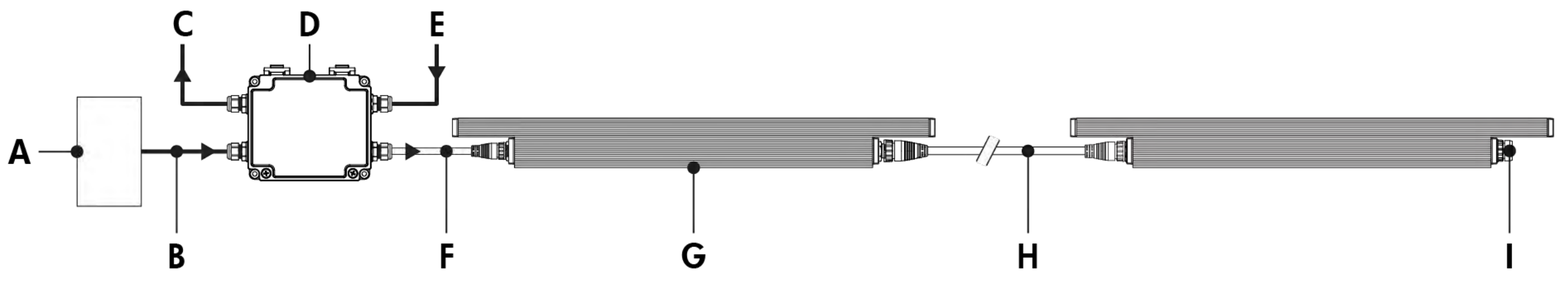

A - DMX/RDM controller (order separately from Lumenpulse, or by others)
B - Data input (Belden 9841 or equivalent, by others)
C - Data output to next CBX (optional, not isolated/not boosted)
D - CBX-DS
E - Power input (100-277V, wiring by others)
F - Leader cable (LOGLC)
G - Lumenfacade
H - Jumper cable (LOGJC)
I - Sealing end cap

Maximum run length

Configuration/Voltage	**120V**	**240V**	**277V**
LOG HO	68ft	76ft	84ft
LOG RO	120ft	128ft	128ft
LOG ASHRAE	128ft	128ft	128ft

Based on 15A maximum, 50 ft leader cable.

- Consult CBX installation instructions for additional wiring details.
- Consult factory for specific applications and maximum fixture count/cable length recommendations. Maximum run length calculations are typically based on 48 in fixtures.
- The DMX/RDM protocol states a maximum of 32 DMX/RDM enabled fixtures on any single run.
- Maximum of 4 DMX/RDM repeaters/CBX cascading in line.
- Maximum of 6 outputs per CBX-ST; maximum of 1 output per CBX-DS.
- Each fixture requires 1 DMX address.
- 1% minimum dimming value.
- ASHRAE version (not available for 12 in fixture lengths): 5 W/ft; Regular Output version: 8.5 W/ft; High Output version: 15.25 W/ft.

lumenpulse™

1220 Marie-Victorin Blvd., Longueuil, QC J4G 2H9 CA **T** United States 617.307.5700 | Canada 1.877.937.3003 | 514.937.3003 **F** 514.937.6289
info@lumenpulse.com **www.lumenpulse.com** **www.lumenpulse.com/products/1046/lumenfacade**

Lumenpulse Group Inc. reserves the right to make changes to this product at any time without prior notice and such modification shall be effective immediately
2019.01.10 copyright © 2019 Lumenpulse Group Inc.
MG - R66

How to order

1	2	3	4	5	6	7	8

9

1 . Housing [1]

LOG ASHRAE	Lumenfacade™, 5 W/ft ASHRAE compliant [2]
LOG RO	Lumenfacade™ Regular Output, 8.5 W/ft
LOG HO	Lumenfacade™ High Output, 15.25 W/ft

[1] Power consumption is typically 20% higher for 12 in fixture lengths.

[2] ASHRAE version not available for 12 in fixture lengths.

2 . Voltage

100	100 volts
120	120 volts
208	208 volts
220	220 volts
240	240 volts
277	277 volts

3 . Length

12	13 3/8 in (4.5 lbs) [1] [2]
24	25 3/8 in (7 lbs)
36	37 3/8 in (10.5 lbs)
48	49 3/8 in (14 lbs)

[1] Power consumption is typically 20% higher for 12 in fixture lengths.

[2] To connect 12 in fixture lengths to the Lumentalk system, DIM or DMX/RDM must be specified as the control option, and a Lumentalk Data Bridge (LDB) is required. See the typical wiring diagrams in the specification sheet for details.

4 . Color and Color Temperature [1]

22K	2200K
27K	2700K
30K	3000K
35K	3500K
40K	4000K
RD	Red [2]
GR	Green [2]
BL	Blue [2]

[1] Consult factory for availability of static Royal Blue, 6500K and 90+ CRI.

[2] Static colors made to order 8-10 weeks.

5 . Optics

WWLF	Asymmetric Wallwash, left feed
WWRF	Asymmetric Wallwash, right feed
8x8	8° x 8° [1]
10x10	10° x 10° [1]
10x30	10° x 30°
10x60	10° x 60°
10x90	10° x 90°
15x25	15° x 25°
30x30	30° x 30°
30x60	30° x 60°
35x35	35° x 35°
50x80	50° x 80°
60x60	60° x 60°
80x80	80° x 80°
90x90	90° x 90

[1] For best results use with HO fixtures at a 6 in setback from surface. Contact factory for application support.

6 . Mounting Options

SAM	Slim Adjustable Mounting
UMP	Fixed Mounting [1]
UMAS	Universal Adjustable Mounting [1]
WAM2	Adjustable Wall Mounting 2 in
WAM6	Adjustable Extended Arm Mounting 6 in
WAM12	Adjustable Extended Arm Mounting 12 in
WAM18	Adjustable Extended Arm Mounting 18 in

[1] Suitable to use when 3GV option is specified.

Lumenpulse Group Inc. reserves the right to make changes to this product at any time without prior notice and such modification shall be effective immediately
2019.01.10 copyright © 2019 Lumenpulse Group Inc.
MG - R66

7 . Finish

BK	Black Sandtex®
BRZ	Bronze Sandtex®
SI	Silver Sandtex®
WH	Smooth white
CC	Custom color and finish (please specify RAL color) (1)

(1) Lumenpulse offers a wide selection of RAL CLASSIC (K7) colors with a smooth texture and high-gloss finish. Please consult factory for a list of available K7 colors, other RAL textures and glosses, or to match alternate color charts. Final color matching results may vary.

8 . Control

NO	On/Off control
LT	Lumentalk (1) (2)
DIM	0-10V dimming
DALI	DALI dimming
ES	Lutron® EcoSystem® Enabled dimming (3)
DMX/RDM	DMX/RDM enabled (4)

(1) To connect 12 in fixture lengths to the Lumentalk system, DIM or DMX/RDM must be specified as the control option, and a Lumentalk Data Bridge (LDB) is required. See the typical wiring diagrams in the specification sheet for details.

(2) A Lumentranslator and LumentalkID (LIDLT) must be specified for Lumentalk applications. Consult Lumentranslator and Lumentalk pages and specification sheets for details.

(3) Available for 24 in (ASHRAE and RO only), 36 in and 48 in fixture lengths only.

(4) A control box (CBX) and LumenID (LID) must be specified.

9 . Options

ETE	End-to-end configuration (factory installed 16 in black input cable included)
CRC	Corrosion-resistant coating for hostile environments (1)
3GV	3G ANSI C136.31 Vibration Rating for bridge applications (2)
CE	CE (certification covers European Economic Area) (3)

(1) Use only when exposed to salt spray and harsh chemicals. This option is not required for normal outdoor exposure.

(2) Available with UMP and UMAS mounting options only.

(3) Consult European specification sheet and installation instructions for CE wiring information.

Lumenpulse Group Inc. reserves the right to make changes to this product at any time without prior notice and such modification shall be effective immediately
2019.01.10 copyright © 2019 Lumenpulse Group Inc.
MG - R66

YP1

Lam Partners
ARCHITECTURAL LIGHTING DESIGN

SANTA & COLE

Arne S Domus

Santa & Cole Team. 2018
Pendant lamps







CE IP 65

A formal synthesis of the traditional spotlight that is so common in the industry, Arne S Domus is a solid and highly efficient indoor lamp that has no complexes in showing its adaptation to function.
Its forms outline a design that is boiled down to a strict geometric language, in which each detail of the aluminium injection body equates its quality with the internal technology of its light source.

General description:
Matte aluminium injection structure with integrated driver in 4 colour options: S&C white, aluminium grey, dark green and mustard.
Primary optics with tempered glass cover.
Circular metal canopy.
Suitable for indoor and outdoor use (CE market).
Electric cable length: 4 m / 157.5”
Suitable for Junction Box (UL market).

Approximate weight (unpacked):
3,3 Kg / 7.2 lb

Technical information:
Light source included (dimmable).
COB LEDs module
Rated input wattage: 28 W
Operating current: 700 mA
Colour Temp.: 2.700 K
CRI: 90
Lifetime: 50.000 h
Luminous flux: 2.470 lm

Built-in dimmable LED.
Suitable for dimming 1-10V. (Not included external dimmer switch 1-10V).
Energy efficiency class (E.E.C): A^{++}... A.
Suitable for indoor and outdoor use (CE market)

Input voltaje:
CE: 220 ~ 240 Vac.
UL: 120 ~ 277 Vac.
Japan: 100 Vac.
(50 Hz / 60 Hz). According to destination

LOR 100%
I. máx. 487 cd/klm (C60 G2.5)

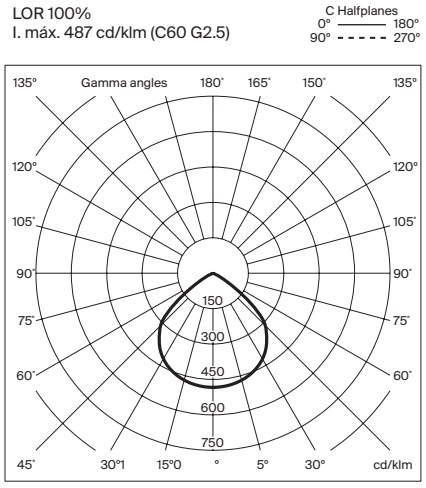

Arne S Domus

Santa & Cole Team. 2018
Pendant lamps

Regulations:
CE
UNE-EN 60598
UNE-EN 55015
UNE-EN 60529
UNE-EN 62031
UNE-EN 61000-3-2
UNE-EN 61347-2-13

UL
Dry and damp location
UL-1598
UL-8750
E-336377

Maintenance:
Clean with a smooth cloth. Do not use ammonia, solvents or abrasive cleaning products.

Others:
The lamp is delivered in one package.
The assembly instructions are delivered with the product.

Model:

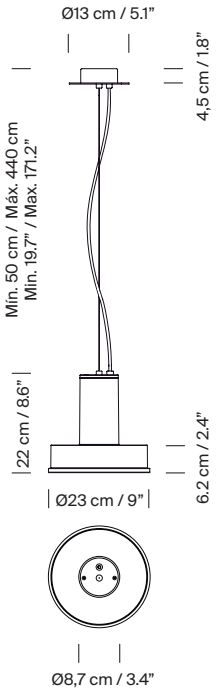

Collection:
Pendant lamps


Arne Domus


Arne S Domus

SQUERO LED

RECESSED

5 YEARS WARRANTY

LUMENWERX
WWW.LUMENWERX.COM

YR1
Lam Partners
ARCHITECTURAL LIGHTING DESIGN

DESCRIPTION

Squero brings new style and flexibility to linear lighting systems. Less than 2" wide, Squero offers four distinctive optics: miniature reflector, parabolic louver, and diffuser as well as a widespread indirect optic. Each optic provides a different visual texture, as well as photometric performance. Further, the optics can be combined in a single luminaire, together with an adjustable accent module. Onboard driver electronics maintain serviceability. Squero recessed can be installed as individual luminaires or in continuous runs and patterns.

See separate spec sheets for Combinations and Patterns.

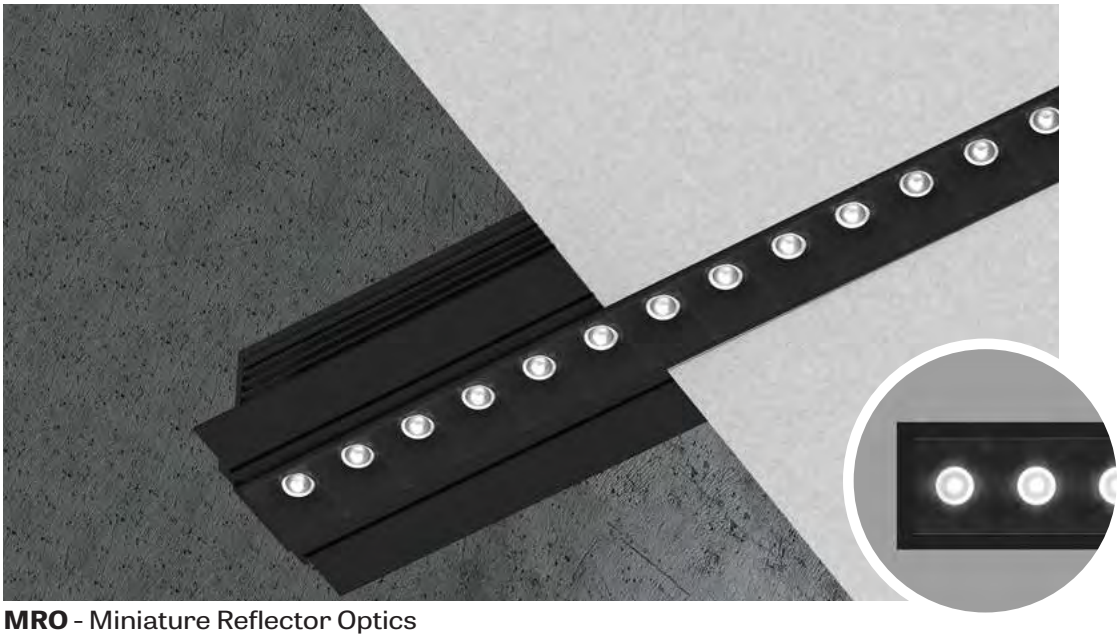

MRO - Miniature Reflector Optics

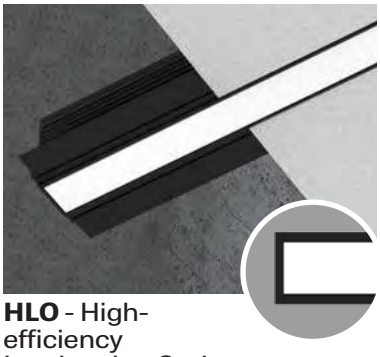

HLO - High-efficiency Lambertian Optic

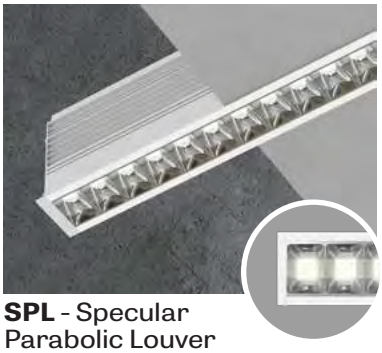

SPL - Specular Parabolic Louver

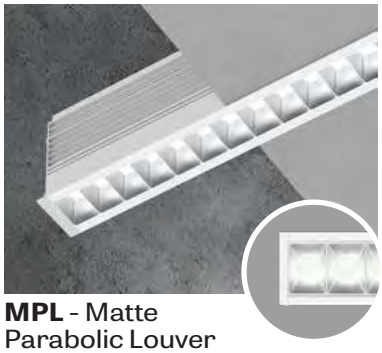

MPL - Matte Parabolic Louver

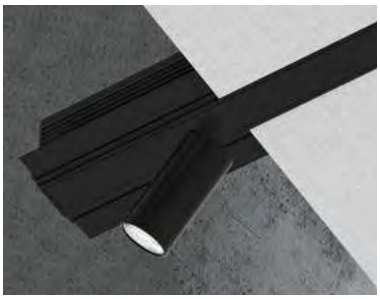

AAM - Adjustable Accent Module

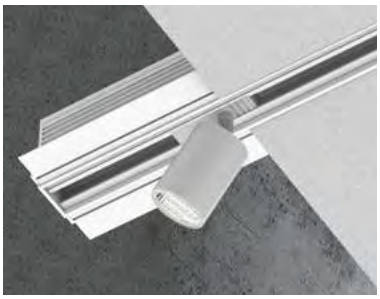

ITR - Integrated Track*

All options show above are standard in both black and white, with the exception of the white baffles.
The images are for demonstration only
*** Track and downlight by others**

www.lumenwerx.com (T) 514-225-4304 (F) 514-931-4862 © All rights are reserved to LumenWerx ULC.
LumenWerx ULC. reserves the right to change or modify product specifications without notification

Intertek

SQUERO LED

RECESSED

LUMENWERX
WWW.LUMENWERX.COM

YR1
Lam Partners ARCHITECTURAL LIGHTING DESIGN

PROJECT: _____
TYPE: _____
NOTES: _____

ORDER GUIDE

SQUR			LED		
LUMINAIRE ID	**OPTICS**	**MRO COLOR**	**LIGHT SOURCE**	**CRI**	**LUMEN PACKAGES**
SQUR - Squero recessed	**MRO18** - 18 degrees Miniature Reflector Optics **MRO35** - 35 degree Miniature Reflector Optics **MRO55** - 55 degree Miniature Reflector Optics **SPL** - Specular Parabolic Louver **MPL** - Matte Parabolic Louver **HLO** - High-efficiency Lambertian Optic **+BLA** - Blank	**W** - White **B** - Black **NA** - Not applicable	**LED** - High performance LED	**80** - 80CRI **90** - 90CRI	**350** - min. eco low output 350lm/ft **500** - low output 500lm/ft **750** - medium output 750lm/ft **1000** - max. high output 1000lm/ft **####** - other required lm/ft

COLOR TEMP.	VOLTAGE	LUMINAIRE LENGTH	DRIVER	ELECTRICAL	MOUNTING
30 - 3000k **35** - 3500k **40** - 4000k	**120** - 120V **277** - 277V **UNV** - 120V-277V	Standard sections - 2', 3', 4', 5' 6', 7', 8' & 12' For all other specify length **#FT** - nominal length in feet Continuous Run - for luminaires over 12' Minimum Individual section 2'	**D1** - 1% dimming 0-10V **DA** - Dali **LTEA2W** - Lutron 1% - 2 wires 120V **L3DA3W** - Lutron 1% - 3 wires **L3DAE** - Lutron 1% EcoSystem **LDE1** - Lutron 1% Eco Dim to Off **LDE5** - Lutron 5% EcoSystem	**1** - 1 circuit **+#EB** - Emergency battery (min 4' fixture, except Lutron) **+#EM** - Emergency light circuit **+#NL** - Night light circuit **+GTD###** - Generator transfer device, 120V or 277V	**DMF** - Drywall mud flange **DTR** - Drywall trim **TG9** - Tegular 9/16" **TG15** - Tegular 15/16" **TB9** - T-bar 9/16" **TB15** - T-bar 15/16" **ST** - Screw slot T-bar

FINISH
W - Matte white **B** - Matte black **CF#** - Custom finish specify RAL#

ADJUSTABLE ACCENT MODULE	AAM CRI	AAM LUMEN PACK.	AAM COLOR TEMP.	AAM FINISH
#AAM21 - AAM 21° **#AAM30** - AAM 30° **#AAM36** - AAM 36° **+ HCL** - Honey comb louver Minimum individual section 4' 5% dimminig 0-10V	**80** - 80CRI **90** - 90CRI	**350** - 350lm **600** - 600lm	**30** - 3000k **35** - 3500k **40** - 4000k	**W** - Matte white **B** - Matte black

OPTIONS
FU - Fuse **ITR** - Integrated Track **FWC** - Flexible whip cable (6' std) **CU** - custom

See page 3 for ordering code detailed information

CROSS SECTION

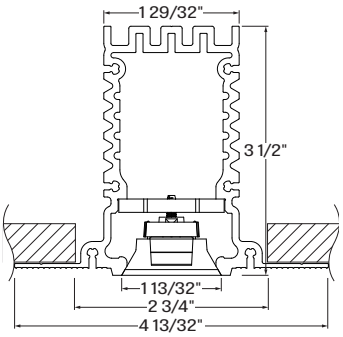

SQUR - recessed-DMF - **MRO**
Miniature Reflector Optics

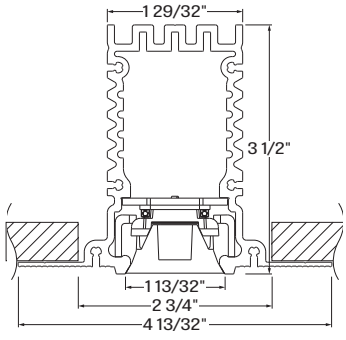

SQUR - recessed-DMF - **SPL & MPL**
Specular & Matte Parabolic Louver

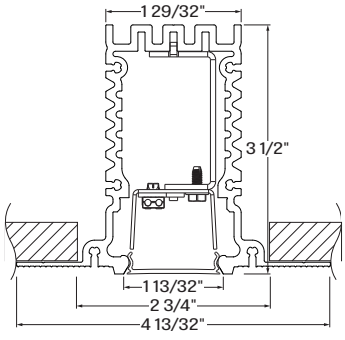

SQUR - recessed-DMF - **HLO**
High-efficiency Lambertian Optic

www.lumenwerx.com (T) 514-225-4304 (F) 514-931-4862 © All rights are reserved to LumenWerx ULC.
LumenWerx ULC. reserves the right to change or modify product specifications without notification

C ETL US LISTED Intertek

OPTICS

MINIATURE REFLECTOR OPTICS (MRO) locates individual, precisely molded TIR elements over each LED emitter, and further shield the source with precise parabolic reflectors. The controlled beam is remarkably comfortable – especially in a small LED luminaire.

MRO is available in a specular black or gloss white finish and creates a distinctive visual texture.

Different TIR elements offer a choice of beam spreads: narrow (18° with SC of 0.3), medium (35° with SC of 0.6), and wide (55° with SC of 0.9). These concentrated distributions can provide effective task illumination in a variety of applications.

Each MRO module is 6" long with five optical chambers.

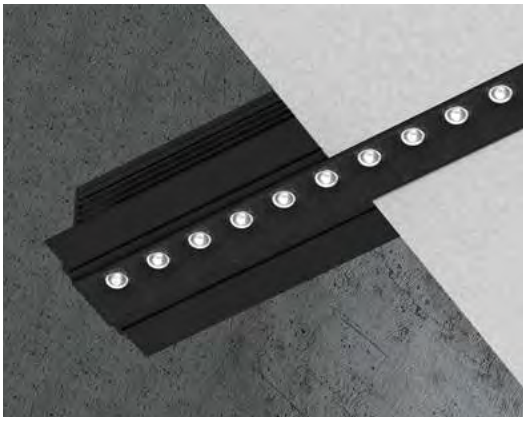

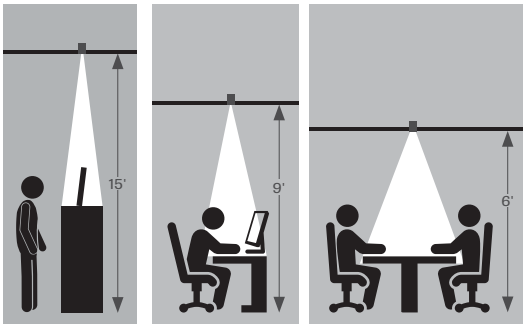

Narrow 18 degree 350lm/f | Medium 35 degree 350lm/f | Wide 55 degree 350lm/f

HIGH EFFICIENCY LAMBERTIAN OPTIC (HLO) - The High-efficiency Lambertian Optic (HLO) shielding of diffusing 0.075" thick acrylic with up to 88% transmission and good source obscuration is combined with matte white side reflectors to create an efficient optical chamber with uniform luminosity.



Luminaire brightness is controlled by the flux-to-shielding area ratio. For visual comfort, avoid high lumen output unless Squero is installed in a high ceiling application. Spacing criteria: 1.2 (longitudinal) x 1.1 (lateral).

PARABOLIC LOUVERS (SPL & MPL) - Parabolic Louver Optics provide excellent shielding and a pleasing crisp visual texture. The precisely molded louvers consist of 1" deep blades and side reflectors with shielding of 50° lengthwise and 45°cross wise.



The parabolic contour of the blades and side reflectors direct light into a comfortable downlight distribution with a spacing criterion of 1.1, while minimizing shadows from the LED array above each cell.

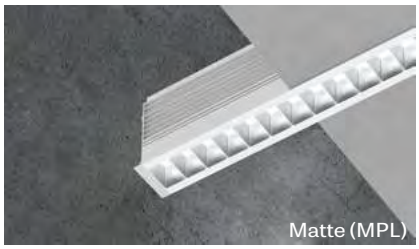

Two finishes are available. Specular (SPL) provides higher efficacy, sharper cut-off, and an ultra quiet appearance at shallow viewing angles. Matte (MPL) offers a softer appearance, a wider beam spread, and gentle brightness transition at cut-off.

ALUMINUM BLANK (BLA) Blank covers provide spacing – functional or rhythmic – in the direct component of a Squero Combination luminaire. Covers are sized according to the Combination design, finished to match the luminaire housing, and snap into the aperture.

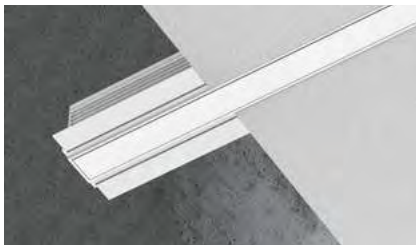

www.lumenwerx.com (T) 514-225-4304 (F) 514-931-4862 © All rights are reserved to LumenWerx ULC.
LumenWerx ULC. reserves the right to change or modify product specifications without notification
Intertek

LIGHT SOURCE - LED

Custom linear array of high-flux LED's mounted onto aluminum-backed circuitry with quick-connect wiring to facilitate service and optimize thermal management. Available in 3000K, 3500K and 4000K with a minimum 80 CRI and an option for 90 CRI with elevated R9 value. Color consistency maintained to within 3 SDCM. All LEDs have been tested in accordance with IESNA LM-80-08 and the results have shown L80 lumen maintenance greater than 60,000 hours. Absolute product photometry is measured and presented in accordance with IESNA LM-79, unless otherwise indicated.

PERFORMANCE PER 4' AT 4000K

MRO - 35 DEGREES

LED output	Color Temp	Watts	Nominal Delivered Lumens	Efficacy LPW
eco low output	4000K	13.5	1400	102
low output	4000K	20	2000	100
medium output	4000K	31	3000	96
high output	4000K	43.5	4000	92

SPL

LED output	Color Temp	Watts	Nominal Delivered Lumens	Efficacy LPW
eco low output	4000K	12	1400	116
low output	4000K	17.5	2000	113
medium output	4000K	27.5	3000	109
high output	4000K	38	4000	105

MPL

LED output	Color Temp	Watts	Nominal Delivered Lumens	Efficacy LPW
eco low output	4000K	13.5	1400	103
low output	4000K	20	2000	100
medium output	4000K	31.5	3000	96
high output	4000K	43.5	4000	92

LUMINAIRE LENGTH

Squero is made up of standard 2, 3, 4, 5, 6, 7, 8 and 12 foot sections that may be joined together to create longer continuous run lengths. Exact run lengths must be noted in the product code. The minimum individual section available is 2 feet.
All individual sections are joined together onsite using the joiner kits provided. LumenWerx offers joiner kits that are extremely simple to work with in the field and result in a fixture that appears virtually seamless with no light leak at any connection.

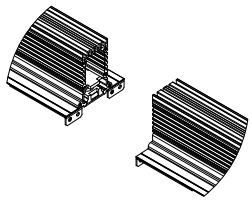

joining system for Squero Recessed

ELECTRICAL

Factory-set adjustable output current electronic driver with 120-277V AC line input. Dimmable from 100% to 1% with 0-10V control. Rated life (90% survivorship) of 50,000 hours at 50°C max. ambient (and 70°C max. case) temperature. At maximum driver load: Efficiency>84%, PF>0.9, THD<20%. Other specifiable options include Lutron Hi-Lume A (specify 2, 3 or 4 wires), EcoSystem H (100%-1%, fade-to-black) and EcoSystem 5 (100%-5%) dimmable drivers and DALI protocol drivers.

EMERGENCY

Factory installed long life high temperature recyclable Ni-Cad battery pack with test switch and charge indicator, minimum of 90 minutes operation, up to 1000 lumens per 4ft (25°C) emergency lighting output. Recharge time of 24 hours.

www.lumenwerx.com (T) 514-225-4304 (F) 514-931-4862 © All rights are reserved to LumenWerx ULC.
LumenWerx ULC. reserves the right to change or modify product specifications without notification

MOUNTING OPTIONS

Recess mount into exposed or concealed T-Bar or Tegular grid ceiling

Mounting for drywall ceilings are available with visible trim, mud flange, trim or trimless

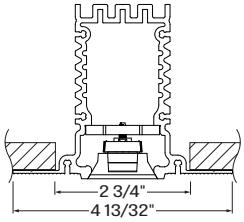

DMF - drywall mud flange

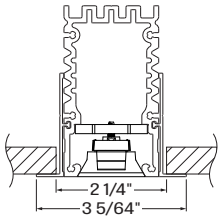

DTR - drywall trim

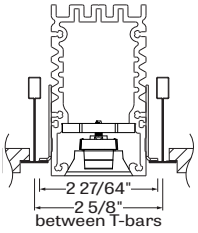

TG9 - tegular 9/16"

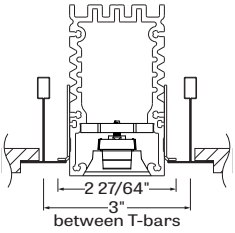

TG15 - tegular 15/16"

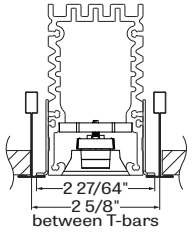

TB9 - t-bar 9/16"

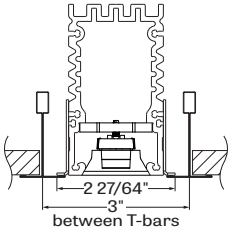

TB15 - t-bar 15/16"

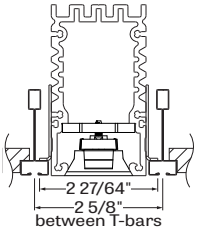

ST - screw slot t-bar

FINISH

Interior - 95%, reflective matte powder coated white paint

Exterior - powder coating.

AJUSTABLE LED ACCENT MODULE (AAM)

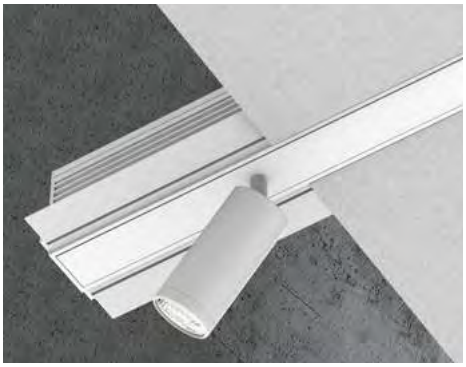

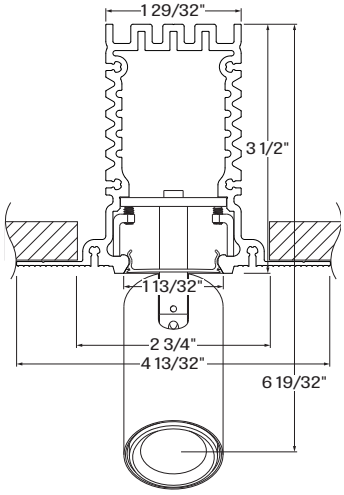

The Adjustable Accent Module (AAM) features a Ø 1.6" x 3.2" cylinder that rotates 360° and tilts 90°. The LED light source is coupled with TIR optics to provide beam angles of 21°, 30°, and 36° while producing up to 600 lumens. LED light source CCT options are 3000K, 3500K, or 4000K, available in either 80 CRI or 90 CRI.

The AAM module can be selected in either a white or black finish and a honeycomb louver accessory is also available. The AAM driver is mounted above the cylinder, inside the SQUERO housing and accepts universal input voltage (120-277VAC) while providing 0-10V dimming control.

OPTIONS

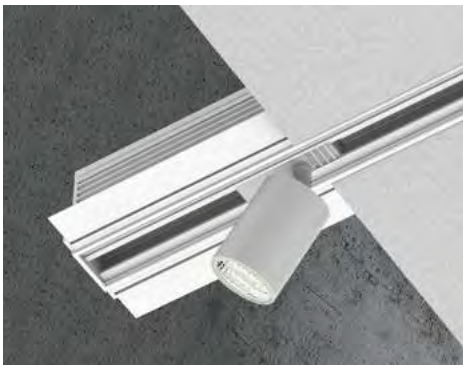

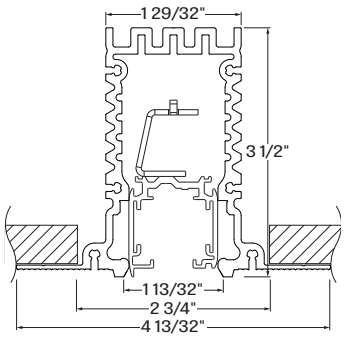

ITR - integrated track (track and downlight by others)

Multiple track systems manufactured by others, are offered in Squero direct, in individual, or runs, with or without LED integrated sections. Detailed specifications of the track system must be supplied. For other mounting options (please consult factory).

www.lumenwerx.com (T) 514-225-4304 (F) 514-931-4862 © All rights are reserved to LumenWerx ULC.
LumenWerx ULC. reserves the right to change or modify product specifications without notification

Intertek

CONSTRUCTION

Housing - Extruded Aluminum (0.100" nominal) up to 90% Recycled Content
Interior brackets - Die formed cold rolled sheet steel 10 gauge thick
Joining system - Die cast Aluminum
MRO - Injection Molded Optical Grade Polycarbonate (0.100" nominal) up to 95% reflective
Parabolic louvers - Injection Molded Optical Grade Polycarbonate Vacuum Metalized, up to 95% reflective
Recessed flanges - Extruded Aluminum (0.075" nominal) up to 90% Recycled Content
End plate - Die formed cold rolled sheet steel 18 gauge thick

WEIGHT

Squero 2ft - 6.63lbs - 3kg
Squero 4ft - 12.35lbs - 5.60kg
Squero 6ft - 18.62lbs - 8.45kg
Squero 8ft - 24.34lbs - 11.04kg

CERTIFICATIONS

ETL - Rated for Indoor Dry/Damp locations. Conforms to UL Standard 1598 and certified to CAN/CSA Standard C22.2 No. 250.0.

WARRANTY

LumenWerx provides a five-year limited warranty of electrical and mechanical performance of the luminaires, including the LED boards, drivers, and auxiliary electronics. LumenWerx will repair or replace defective luminaires or components at our discretion, provided they have been installed and operated in accordance with our specifications. Other limitations apply, please refer to the full warranty on our website.

www.lumenwerx.com (T) 514-225-4304 (F) 514-931-4862 © All rights are reserved to LumenWerx ULC.
LumenWerx ULC. reserves the right to change or modify product specifications without notification
Intertek

PERFORMANCE WITH MINIATURE REFLECTOR OPTICS (MRO) 18 DEGREES

350 LUMEN AT 80CRI - ECO LOW OUTPUT

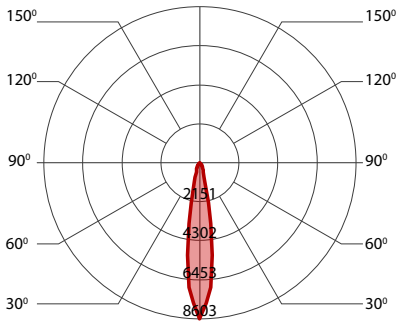

PERFORMANCE PER 4'

LED output	Color Temp	Watts	Nominal Delivered Lumens	Efficacy LPW
eco low output	3000K	16.5	1400	86
eco low output	3500K	15.5	1400	91
eco low output	4000K	14.5	1400	98

500 LUMEN AT 80CRI - LOW OUTPUT

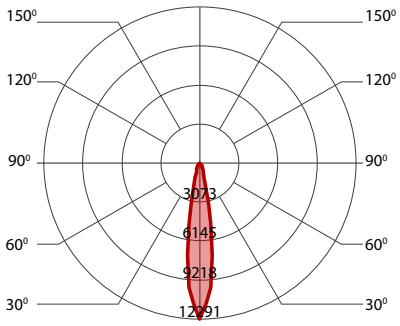

PERFORMANCE PER 4'

LED output	Color Temp	Watts	Nominal Delivered Lumens	Efficacy LPW
low output	3000K	24	2000	84
low output	3500K	22.5	2000	88
low output	4000K	21	2000	96

750 LUMEN AT 80CRI - MEDIUM OUTPUT

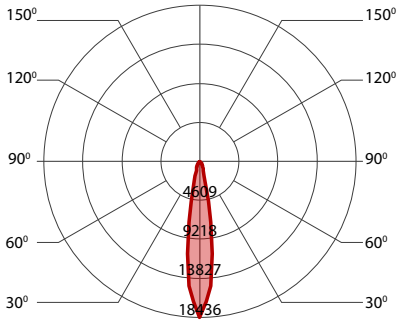

PERFORMANCE PER 4'

LED output	Color Temp	Watts	Nominal Delivered Lumens	Efficacy LPW
medium output	3000K	37.5	3000	80
medium output	3500K	35.5	3000	84
medium output	4000K	33	3000	91

1000 LUMEN AT 80CRI - HIGH OUTPUT

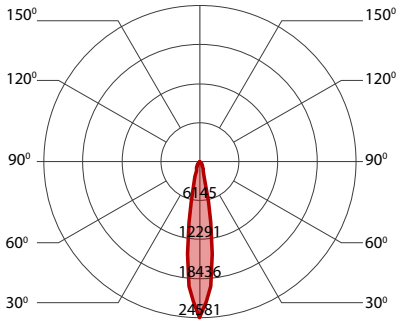

PERFORMANCE PER 4'

LED output	Color Temp	Watts	Nominal Delivered Lumens	Efficacy LPW
high output	3000K	52.5	4000	76
high output	3500K	50	4000	80
high output	4000K	46	4000	87

www.lumenwerx.com (T) 514-225-4304 (F) 514-931-4862 © All rights are reserved to LumenWerx ULC.
LumenWerx ULC. reserves the right to change or modify product specifications without notification

PERFORMANCE WITH MINIATURE REFLECTOR OPTICS (MRO) 35 DEGREES

350 LUMEN AT 80CRI - ECO LOW OUTPUT

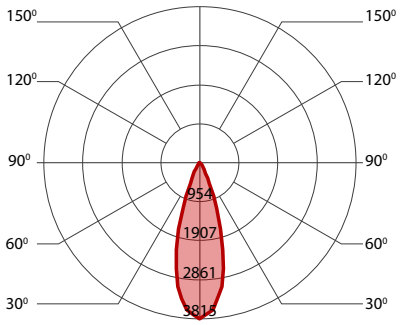

PERFORMANCE PER 4'

LED output	Color Temp	Watts	Nominal Delivered Lumens	Efficacy LPW
eco low output	3000K	15.5	1400	90
eco low output	3500K	14.5	1400	95
eco low output	4000K	13.5	1400	102

500 LUMEN AT 80CRI - LOW OUTPUT

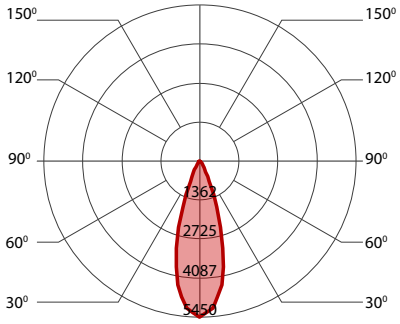

PERFORMANCE PER 4'

LED output	Color Temp	Watts	Nominal Delivered Lumens	Efficacy LPW
low output	3000K	22.5	2000	88
low output	3500K	21.5	2000	92
low output	4000K	20	2000	100

750 LUMEN AT 80CRI - MEDIUM OUTPUT

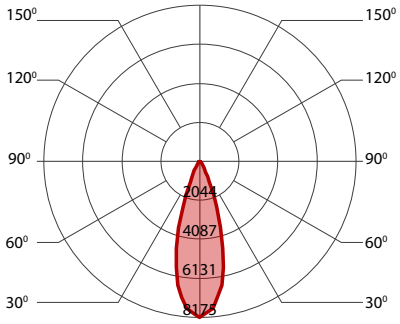

PERFORMANCE PER 4'

LED output	Color Temp	Watts	Nominal Delivered Lumens	Efficacy LPW
medium output	3000K	35.5	3000	84
medium output	3500K	33.5	3000	89
medium output	4000K	31	3000	96

1000 LUMEN AT 80CRI - HIGH OUTPUT

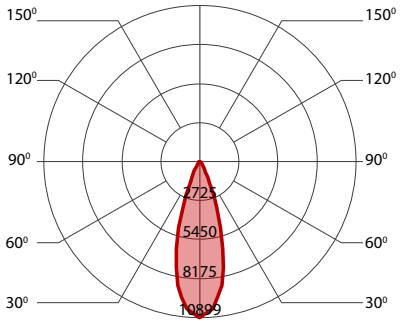

PERFORMANCE PER 4'

LED output	Color Temp	Watts	Nominal Delivered Lumens	Efficacy LPW
high output	3000K	50	4000	80
high output	3500K	47	4000	85
high output	4000K	43.5	4000	92

www.lumenwerx.com (T) 514-225-4304 (F) 514-931-4862 © All rights are reserved to LumenWerx ULC.
LumenWerx ULC. reserves the right to change or modify product specifications without notification
Intertek

PERFORMANCE WITH MINIATURE REFLECTOR OPTICS (MRO) 55 DEGREES

350 LUMEN AT 80CRI - ECO LOW OUTPUT

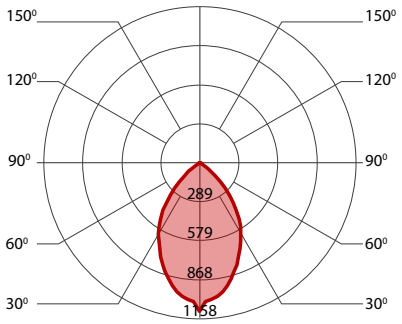

PERFORMANCE PER 4'

LED output	Color Temp	Watts	Nominal Delivered Lumens	Efficacy LPW
eco low output	3000K	15.5	1400	89
eco low output	3500K	15	1400	94
eco low output	4000K	14	1400	101

500 LUMEN AT 80CRI - LOW OUTPUT

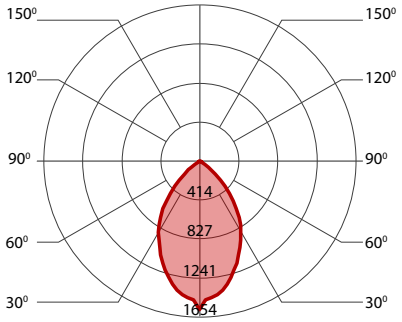

PERFORMANCE PER 4'

LED output	Color Temp	Watts	Nominal Delivered Lumens	Efficacy LPW
low output	3000K	23	2000	87
low output	3500K	22	2000	91
low output	4000K	20	2000	99

750 LUMEN AT 80CRI - MEDIUM OUTPUT

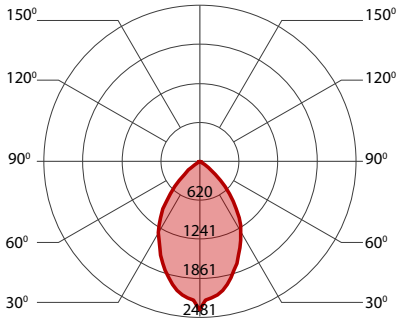

PERFORMANCE PER 4'

LED output	Color Temp	Watts	Nominal Delivered Lumens	Efficacy LPW
medium output	3000K	36	3000	83
medium output	3500K	34	3000	88
medium output	4000K	31.5	3000	95

1000 LUMEN AT 80CRI - HIGH OUTPUT

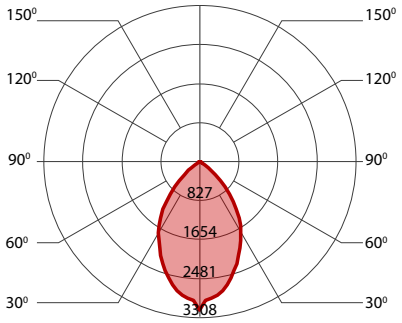

PERFORMANCE PER 4'

LED output	Color Temp	Watts	Nominal Delivered Lumens	Efficacy LPW
high output	3000K	50.5	4000	79
high output	3500K	47.5	4000	84
high output	4000K	44	4000	91

www.lumenwerx.com (T) 514-225-4304 (F) 514-931-4862 © All rights are reserved to LumenWerx ULC.
LumenWerx ULC. reserves the right to change or modify product specifications without notification

PERFORMANCE WITH HIGH-EFFICIENCY LAMBERTIAN OPTIC (HLO)

350 LUMEN AT 80CRI - ECO LOW OUTPUT

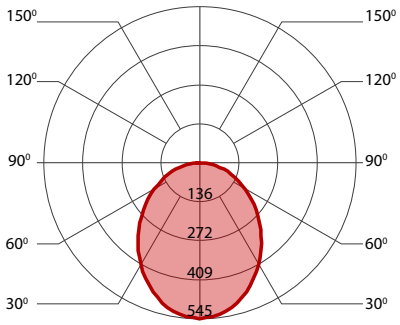

PERFORMANCE PER 4'

LED output	Color Temp	Watts	Nominal Delivered Lumens	Efficacy LPW
eco low output	3000K	12.5	1400	113
eco low output	3500K	12	1400	115
eco low output	4000K	12	1400	119

500 LUMEN AT 80CRI - LOW OUTPUT

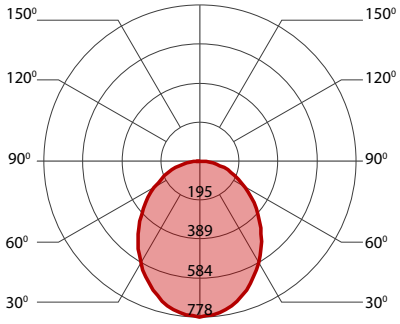

PERFORMANCE PER 4'

LED output	Color Temp	Watts	Nominal Delivered Lumens	Efficacy LPW
low output	3000K	18	2000	111
low output	3500K	17.5	2000	113
low output	4000K	17	2000	116

750 LUMEN AT 80CRI - MEDIUM OUTPUT

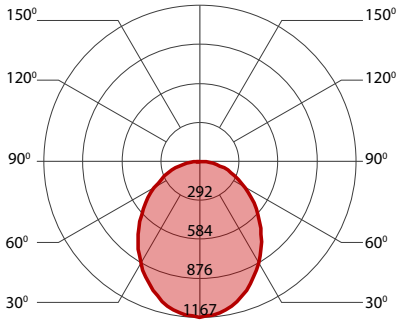

PERFORMANCE PER 4'

LED output	Color Temp	Watts	Nominal Delivered Lumens	Efficacy LPW
medium output	3000K	28.5	3000	106
medium output	3500K	28	3000	108
medium output	4000K	27	3000	112

1000 LUMEN AT 80CRI - HIGH OUTPUT

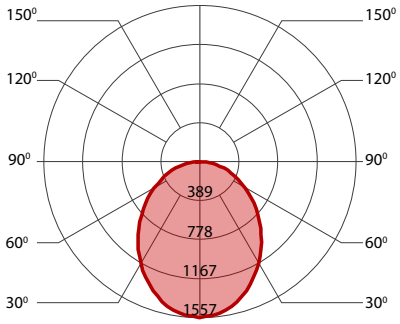

PERFORMANCE PER 4'

LED output	Color Temp	Watts	Nominal Delivered Lumens	Efficacy LPW
high output	3000K	39	4000	102
high output	3500K	38.5	4000	104
high output	4000K	37	4000	108

www.lumenwerx.com (T) 514-225-4304 (F) 514-931-4862 © All rights are reserved to LumenWerx ULC.
LumenWerx ULC. reserves the right to change or modify product specifications without notification

PERFORMANCE WITH SPECULAR PARABOLIC LOUVER (SPL)

350 LUMEN AT 80CRI - ECO LOW OUTPUT

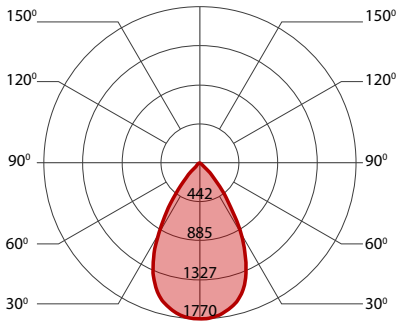

PERFORMANCE PER 4'

LED output	Color Temp	Watts	Nominal Delivered Lumens	Efficacy LPW
eco low output	3000K	12	1400	115
eco low output	3500K	12	1400	115
eco low output	4000K	12	1400	116

500 LUMEN AT 80CRI - LOW OUTPUT

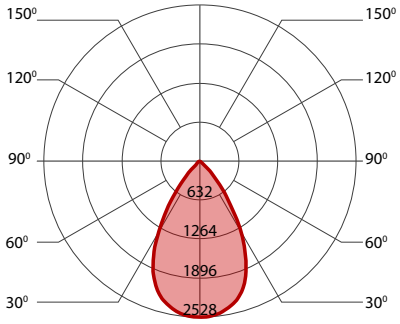

PERFORMANCE PER 4'

LED output	Color Temp	Watts	Nominal Delivered Lumens	Efficacy LPW
low output	3000K	18	2000	111
low output	3500K	18	2000	111
low output	4000K	17.5	2000	113

750 LUMEN AT 80CRI - MEDIUM OUTPUT

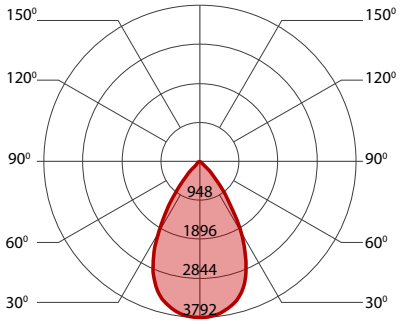

PERFORMANCE PER 4'

LED output	Color Temp	Watts	Nominal Delivered Lumens	Efficacy LPW
medium output	3000K	28	3000	107
medium output	3500K	28	3000	107
medium output	4000K	27.5	3000	109

1000 LUMEN AT 80CRI - HIGH OUTPUT

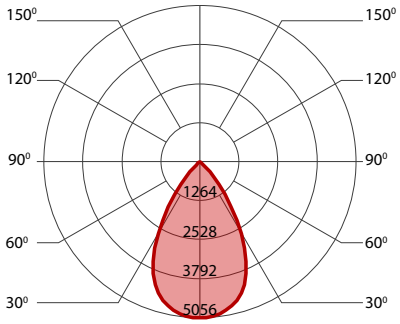

PERFORMANCE PER 4'

LED output	Color Temp	Watts	Nominal Delivered Lumens	Efficacy LPW
high output	3000K	38.5	4000	104
high output	3500K	38.5	4000	104
high output	4000K	38	4000	105

www.lumenwerx.com (T) 514-225-4304 (F) 514-931-4862 © All rights are reserved to LumenWerx ULC.
LumenWerx ULC. reserves the right to change or modify product specifications without notification
Intertek

PERFORMANCE WITH MATTE PARABOLIC LOUVER (MPL)

350 LUMEN AT 80CRI - ECO LOW OUTPUT

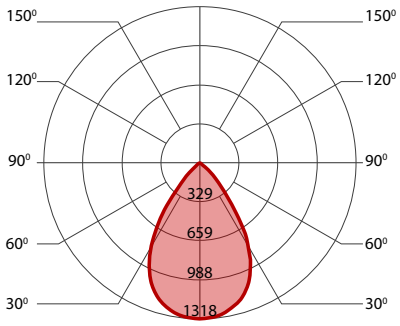

PERFORMANCE PER 4'

LED output	Color Temp	Watts	Nominal Delivered Lumens	Efficacy LPW
eco low output	3000K	14	1400	101
eco low output	3500K	14	1400	101
eco low output	4000K	13.5	1400	103

500 LUMEN AT 80CRI - LOW OUTPUT

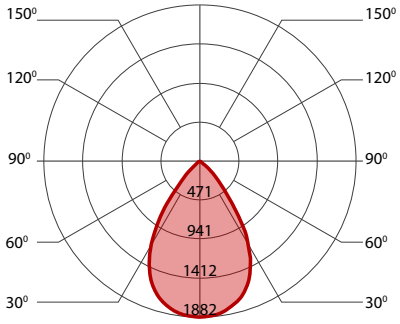

PERFORMANCE PER 4'

LED output	Color Temp	Watts	Nominal Delivered Lumens	Efficacy LPW
low output	3000K	20.5	2000	98
low output	3500K	20.5	2000	98
low output	4000K	20	2000	100

750 LUMEN AT 80CRI - MEDIUM OUTPUT

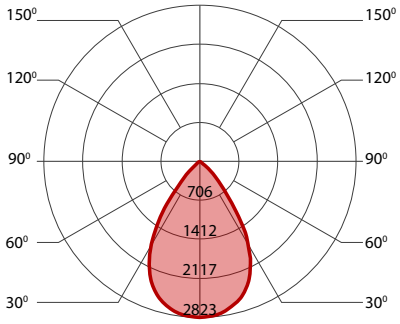

PERFORMANCE PER 4'

LED output	Color Temp	Watts	Nominal Delivered Lumens	Efficacy LPW
medium output	3000K	32	3000	94
medium output	3500K	32	3000	94
medium output	4000K	31.5	3000	96

1000 LUMEN AT 80CRI - HIGH OUTPUT

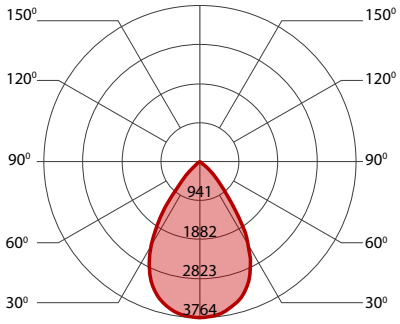

PERFORMANCE PER 4'

LED output	Color Temp	Watts	Nominal Delivered Lumens	Efficacy LPW
high output	3000K	44	4000	91
high output	3500K	44	4000	91
high output	4000K	43.5	4000	92

www.lumenwerx.com (T) 514-225-4304 (F) 514-931-4862 © All rights are reserved to LumenWerx ULC.
LumenWerx ULC. reserves the right to change or modify product specifications without notification

Intertek

Specification Sheet

lumenfacade

YS1 Lam Partners

LOG

WHITE AND STATIC COLORS

Project Name _____ **Qty** _____

Type _____ **Catalog / Part Number** _____



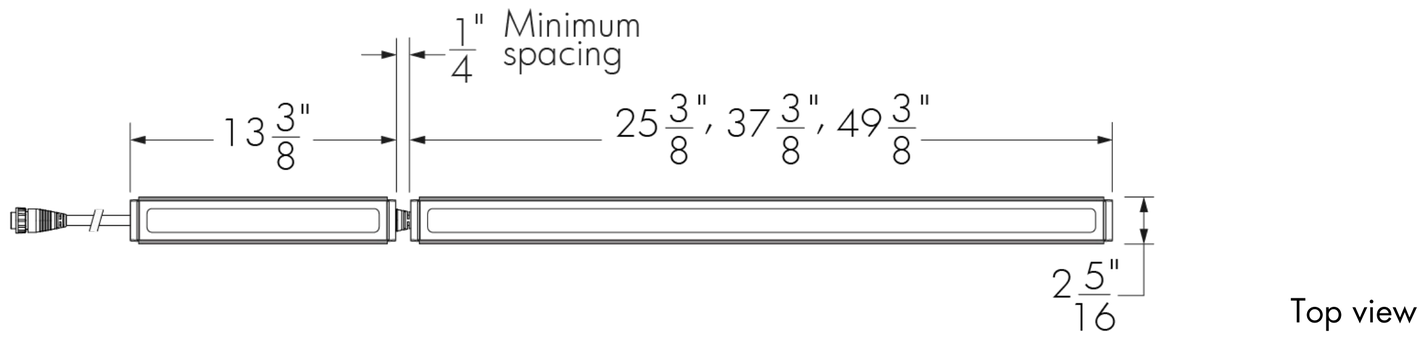

Top view

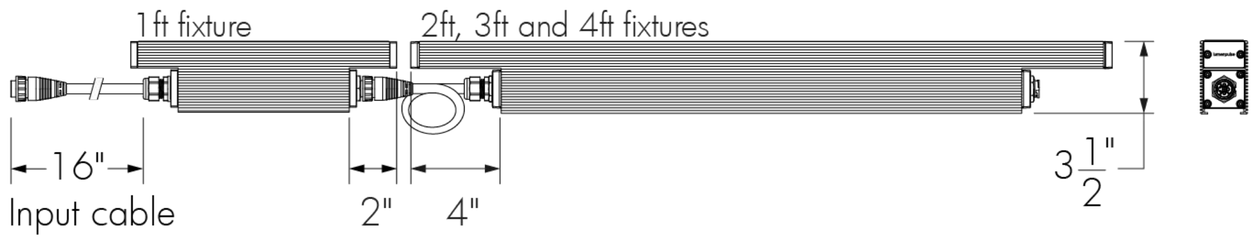

End-to-end (ETE) option shown

Front and side views

Photometric Summary

	Delivered output (lm)	Intensity (peak cd)
WW	3,592	5,159
8°x8°	4,045	77,896
10°x10°	3,768*	38,346*
10°x30°	3,830	30,056
10°x60°	3,692	19,654
10°x90°	3,576	7,897
30°x30°	3,765	14,726
30°x60°	3,862*	5,119*
60°x60°	3,447*	3,015*
90°x90°	3,592	1,886

Based on HO 4000K, 4ft [1219mm] configuration.
Photometric performance is measured in compliance with IESNA LM-79-08.
*Estimated. Consult website for the latest photometric files.

Optics

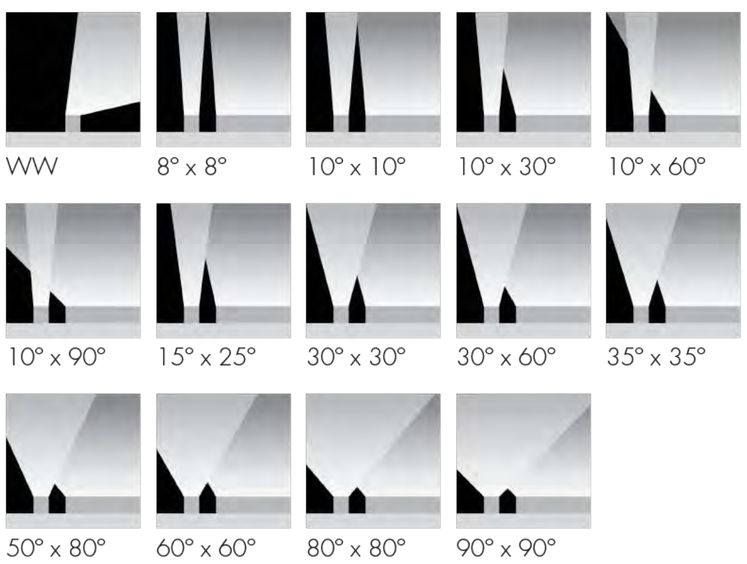

Description

The Lumenfacade is a high-performance linear LED luminaire for grazing or floodlighting exterior walls and facades. Featuring second generation LED technology, the luminaire is available in 12 in, 24 in, 36 in or 48 in sections, and can be configured with a wide number of options, including: optics for grazing or flood lighting; a choice of outputs (ASHRAE 5 W/ft, RO 8.5 W/ft or HO 15.25 W/ft); various color temperatures or static colors; various mounting options, finishes, accessories and controls. The Lumenfacade is also available with a unique asymmetric wallwash distribution, providing exceptional uniformity and brightness for walls and signage.

Features

Color and Color Temperature	2200K, 2700K, 3000K, 3500K, 4000K, Red, Green, Blue
Length (nominal)	12 in, 24 in, 36 in, 48 in
Optics	Asymmetric Wallwash, 8° x 8°, 10° x 10°, 10° x 30°, 10° x 60°, 10° x 90°, 15° x 25°, 30° x 30°, 30° x 60°, 35° x 35°, 50° x 80°, 60° x 60°, 80° x 80°, 90° x 90°
Options	End-to-end configuration (factory installed 16 in black input cable included), Corrosion-resistant coating for hostile environments, 3G ANSI C136.31 Vibration Rating for bridge applications, CE (certification covers European Economic Area)
Power Consumption	5 W/ft (meets ASHRAE standards for linear lighting on building facades - not available for 12 in fixture lengths), 8.5 W/ft (RO version), 15.25 W/ft (HO version), Typically 20% higher for 12 in fixture lengths
Warranty	5-year limited warranty

lumenpulse™

1220 Marie-Victorin Blvd., Longueuil, QC J4G 2H9 CA **T** United States 617.307.5700 | Canada 1.877.937.3003 | 514.937.3003 **F** 514.937.6289
info@lumenpulse.com **www.lumenpulse.com** **www.lumenpulse.com/products/1046/lumenfacade**

Lumenpulse Group Inc. reserves the right to make changes to this product at any time without prior notice and such modification shall be effective immediately
2019.01.10 copyright © 2019 Lumenpulse Group Inc.
MG - R66

Specification Sheet

lumenfaca

LOG

WHITE AND STATIC COLORS

Colors and Color Temperatures





Controls

ON/OFF 0-10V DALI

lumentalk DMXrdm EcoSystem Enabled

Ratings

IP66 IK07*

*asymmetric wallwash lens is IK06 rated

Certifications

cULus CE RoHS 5 YEARS lumenpulse

Performance

Illuminance at Distance	Minimum 1 fc at 140 ft (HO 4000K, 48 in fixture, 10° x 60°, DMX/RDM)
Color Consistency	2 SDCM, 3 SDCM (2200K)
Color Rendering	Minimum CRI 80
Lumen Maintenance	L70 280,000 hrs, L95 35,000 hrs

Physical

Housing Material	Low copper content extruded aluminum
Lens Material	Clear tempered glass
Hardware Material	Stainless steel
End Cap Material	Machined aluminum
Gasket Material	Silicone
Surface Finish	Electrostatically applied polyester powder coat
Weight	12 in: 4.5 lbs, 24 in: 7 lbs, 36 in: 10.5 lbs, 48 in: 14 lbs

Electrical and control

Voltage	100 to 277 volts
Fixture Cable	Power and data in one cable, End-to-end option (ETE): 16 in black input cable (no jumper cable needed for minimum spacing between two fixtures)
Leader Cable Conductors	5C #16-5
Maximum Cable and Fixture Run Length	252 ft (On/Off, 277V, RO version), 164 ft (On/Off, 277V, HO version)
Control	On/Off control, Lumentalk, 0-10V dimming, DALI dimming, Lutron® EcoSystem® Enabled dimming, DMX/RDM enabled
Resolution (DMX/RDM)	Per foot or per fixture (configured with LumenID V3 software), 8-bit or 16-bit

Environmental

Storage Temperature	-40 °F to 185 °F (device must reach start-up temperature value before operating)
Start-up Temperature	-13 °F to 122 °F
Operating Temperature	-40 °F to 122 °F
Ingress Protection Rating	IP66
Impact Resistance Rating	IK07 (asymmetric wallwash lens is IK06 rated)

lumenpulse™

1220 Marie-Victorin Blvd., Longueuil, QC J4G 2H9 CA **T** United States 617.307.5700 | Canada 1.877.937.3003 | 514.937.3003 **F** 514.937.6289
info@lumenpulse.com **www.lumenpulse.com** **www.lumenpulse.com/products/1046/lumenfacade**

Lumenpulse Group Inc. reserves the right to make changes to this product at any time without prior notice and such modification shall be effective immediately
2019.01.10 copyright © 2019 Lumenpulse Group Inc.
MG - R66

Accessories (order separately)

Optical Accessories	Lumenfacade Radial Louver
Cables	Leader cable (standard), Jumper cable (standard), Leader cable (ETE), Jumper cable (ETE)
Control Boxes	DMX/RDM enabled (daisy chain or star configuration), Ethernet enabled (daisy chain or star configuration), Lumentalk Data Bridge
Control Systems	Lumentone™ 2, Pharos® kit
Diagnostic and Addressing Tools	LumenID, LumentalkID

Lumenpulse Group Inc. reserves the right to make changes to this product at any time without prior notice and such modification shall be effective immediately
2019.01.10 copyright © 2019 Lumenpulse Group Inc.
MG - R66

Asymmetric wallwash optic details

WWLF - Asymmetric wallwash optic, left feed

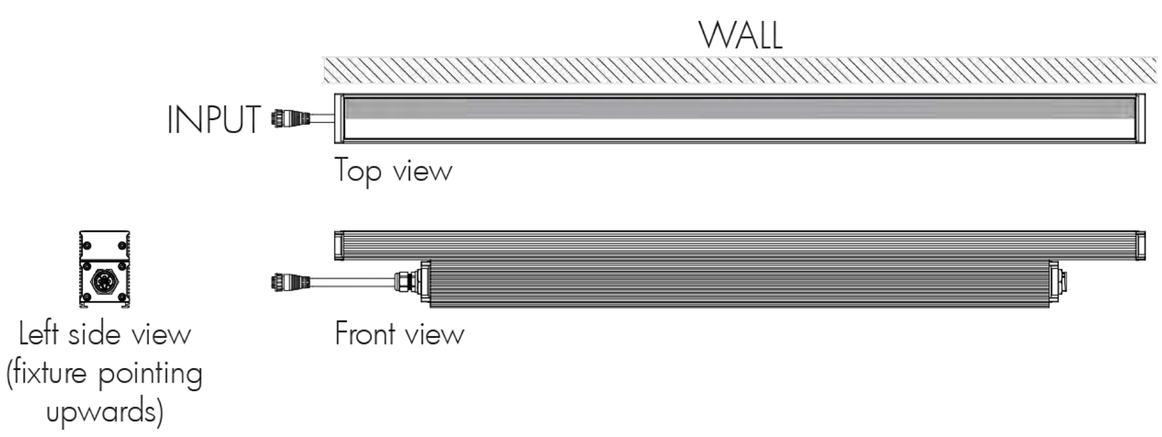

WWRF - Asymmetric wallwash optic, right feed

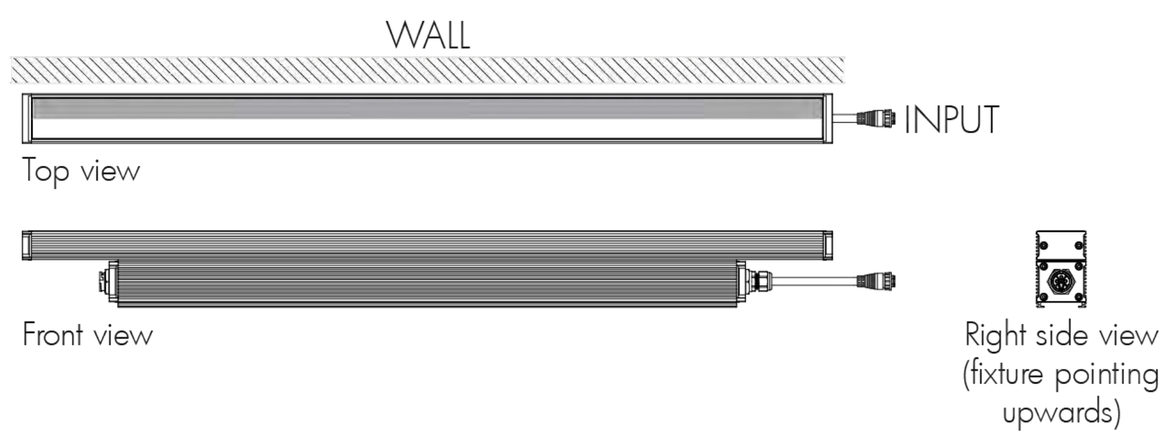

- Always position frosted side toward the wall.
- Fixture's feeding side is based on uplight installations. Feeding sides are reversed when fixture is used in a downlight application.
- Recommended setback from wall is 1/10 of the wall height. Example: 2 ft setback for a 20 ft wall.

Mounting options

Surface Mount

SAM - Slim Adjustable Mounting

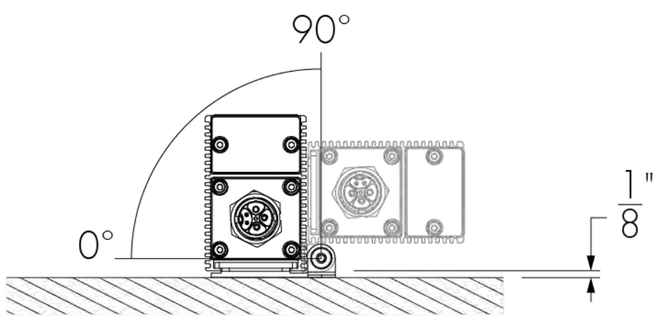

SAM - Mounting hole pattern

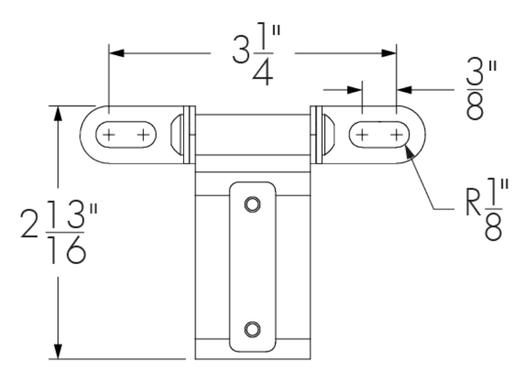

UMP - Fixed Mounting

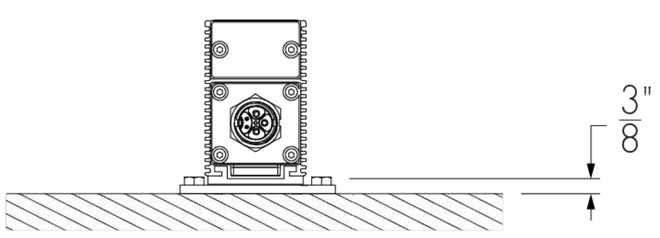

UMP - Mounting hole pattern

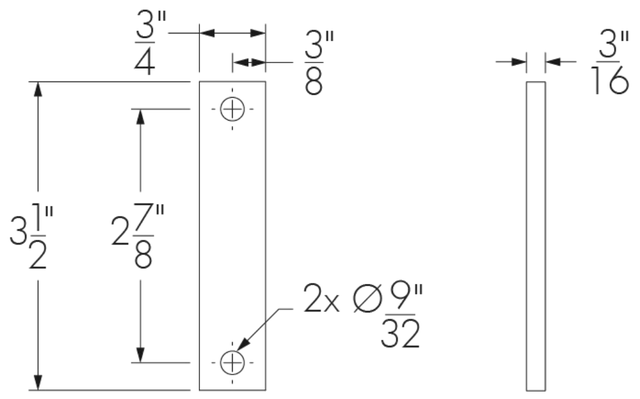

Lumenpulse Group Inc. reserves the right to make changes to this product at any time without prior notice and such modification shall be effective immediately
2019.01.10 copyright © 2019 Lumenpulse Group Inc.
MG - R66

Wall Mount

UMAS - Universal Adjustable Mounting

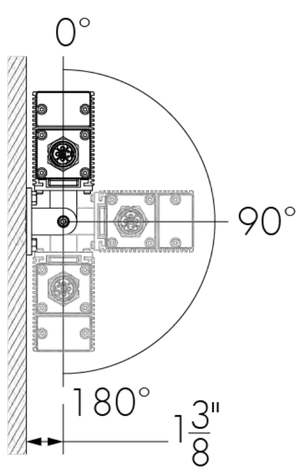

UMAS - Mounting hole pattern

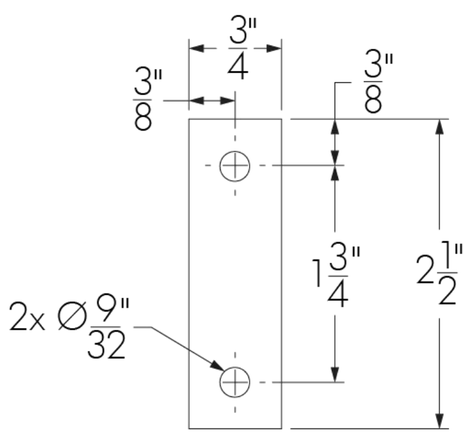

WAM2 - Adjustable Wall Mounting 2 in

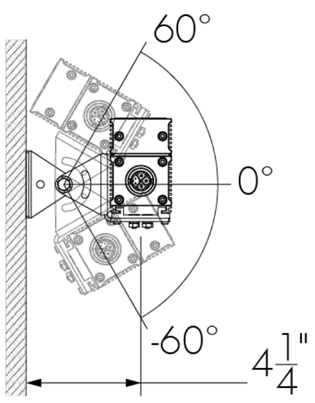

WAM2 - Mounting hole pattern

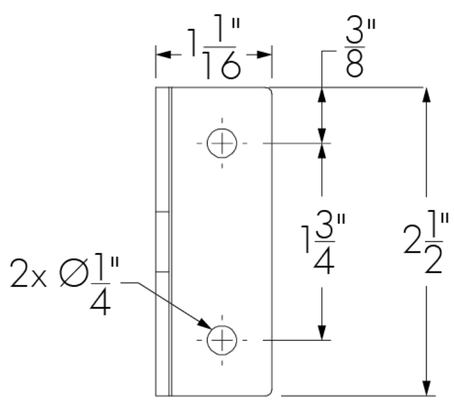

WAM6 - Adjustable Extended Arm Mounting 6 in

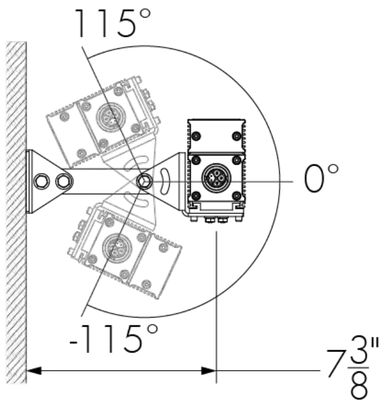

WAM6 - Mounting hole pattern

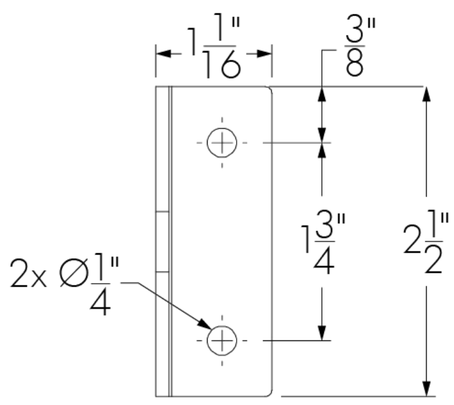

WAM12 - Adjustable Extended Arm Mounting 12 in

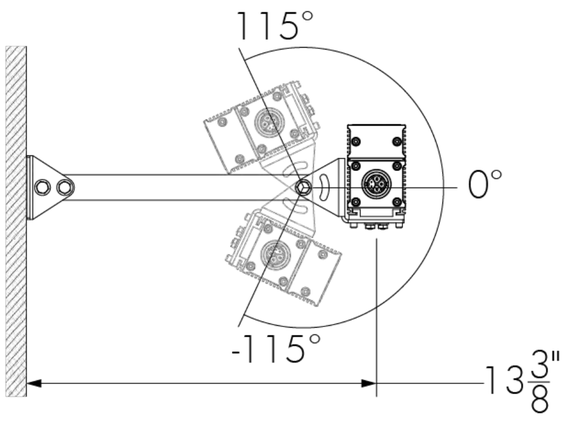

WAM12 - Mounting hole pattern

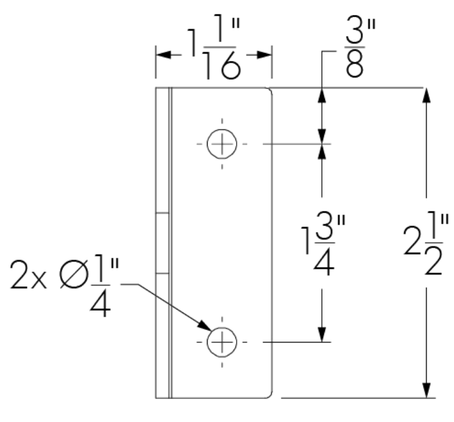

WAM18 - Adjustable Extended Arm Mounting 18 in

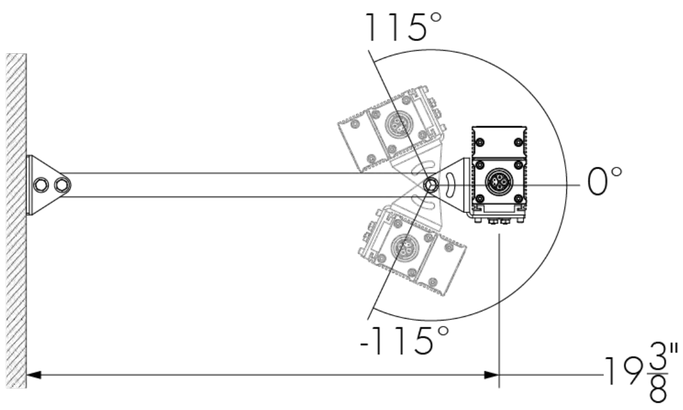

WAM18 - Mounting hole pattern

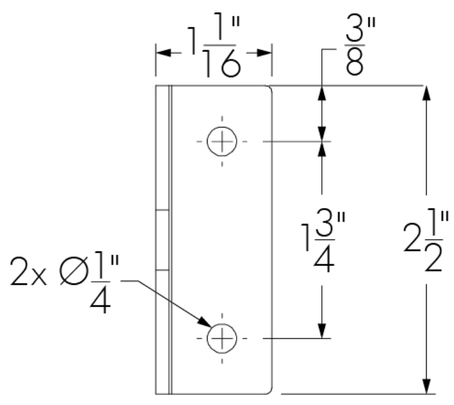

Lumenpulse Group Inc. reserves the right to make changes to this product at any time without prior notice and such modification shall be effective immediately
2019.01.10 copyright © 2019 Lumenpulse Group Inc.
MG - R66

End-to-end configuration option (ETE)

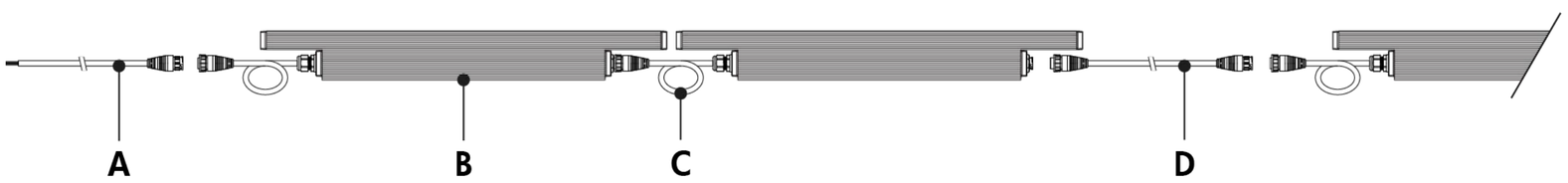

A - ETE leader cable (order separately)
B - Lumenfacade with ETE option
C - ETE 16 in black input cable
D - ETE jumper cable (order separately)

Includes a factory installed 16 in black input cable. A jumper cable is not required for minimum spacing between two end-to-end (ETE) fixtures. An ETE jumper cable is required only if a longer distance between two adjacent ETE fixtures is needed, or to connect two continuous runs of ETE fixtures together.

Optical accessories (order separately)

LOGRD - Radial louver for Lumenfacade

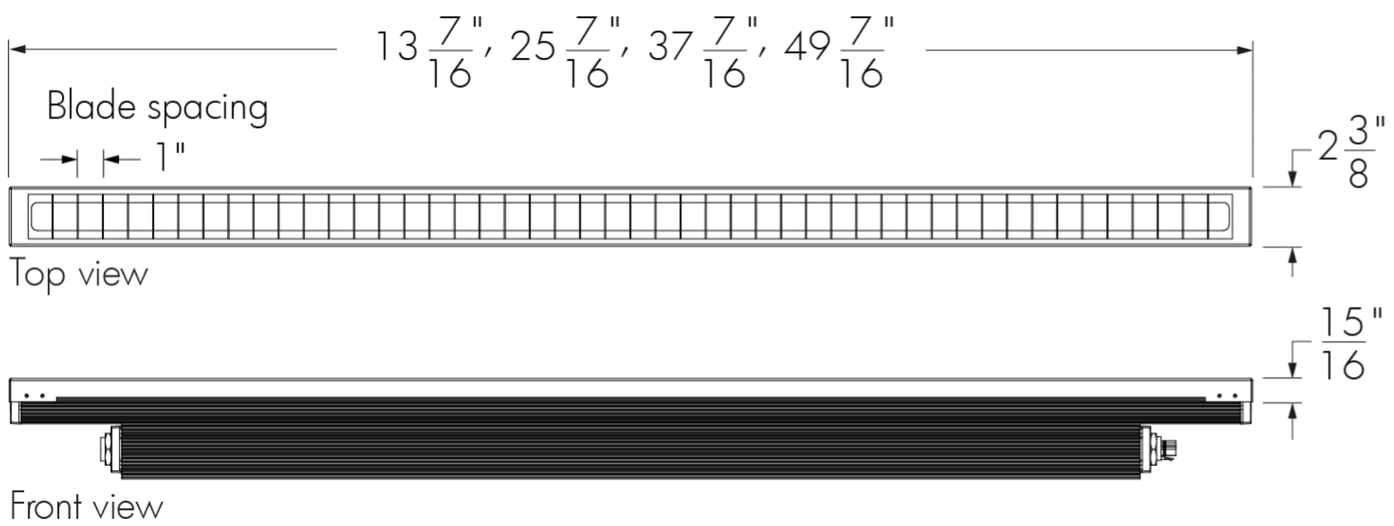

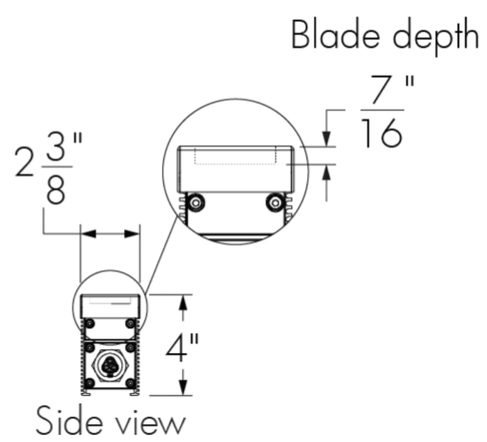

LOGRD-**LENGTH-FINISH-OPTIONS**

Please specify:
LENGTH: 12 in, 24 in, 36 in or 48 in; **FINISH**: BK - Black Sandtex®, BRZ - Bronze Sandtex®, SI - Silver Sandtex®, WH - Smooth white or CC - custom color and finish (please specify RAL color); **OPTIONS**: CRC - Corrosion-resistant coating for hostile environments

- The addition of a louver will affect beam distribution. Consult factory for application support.
- Not suitable for asymmetric wallwash optic.

Lumenpulse Group Inc. reserves the right to make changes to this product at any time without prior notice and such modification shall be effective immediately
2019.01.10 copyright © 2019 Lumenpulse Group Inc.
MG - R66

Cables (order separately)

LOGLC - Leader cable for Lumenfacade



Standard construction
LOGLC-**CERTIFICATION**-STD-**LENGTH-CABLE COLOR**



End-to-end (ETE) option
LOGLC-**CERTIFICATION**-ETE-**LENGTH-CABLE COLOR**

Please specify:
CERTIFICATION: UL or CE; **LENGTH**: 10 ft, 25 ft, 50 ft, 100 ft, 150 ft or 200 ft; **CABLE COLOR**: black or white (connectors are black as standard; ETE fixture input cables are black as standard)

- Suitable for dimming/data and non-dimming applications.
- Sealing end cap is mandatory for any unused connector. One (1) included with every leader cable.
- Consult Lumenfacade leader cable specification sheet for details.

LOGJC - Jumper cable for Lumenfacade

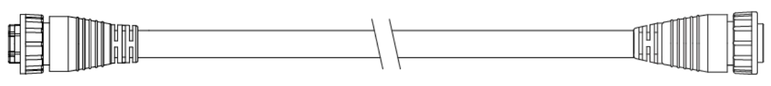

Standard construction
LOGJC-**CERTIFICATION**-STD-**LENGTH-CABLE COLOR**

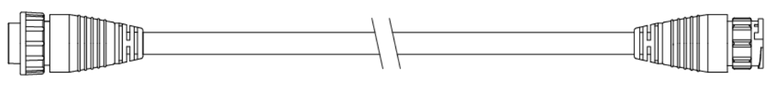

End-to-end (ETE) option
LOGJC-**CERTIFICATION**-ETE-**LENGTH-CABLE COLOR**

Please specify:
CERTIFICATION: UL or CE; **LENGTH**: 1 ft (available for ETE option only), 2 ft to 30 ft (available in 1 ft increments) or 50 ft; **CABLE COLOR**: black or white (connectors are black as standard; ETE fixture input cables are black as standard)

- Suitable for dimming/data and non-dimming applications.
- Consult Lumenfacade jumper cable specification sheet for details.

Lumenpulse Group Inc. reserves the right to make changes to this product at any time without prior notice and such modification shall be effective immediately
2019.01.10 copyright © 2019 Lumenpulse Group Inc.
MG - R66

Control boxes (order separately)

CBX-DMX/RDM - DMX/RDM enabled (daisy chain or star configuration)

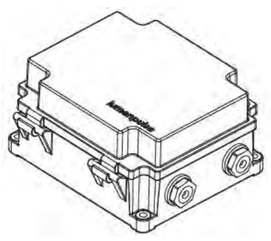

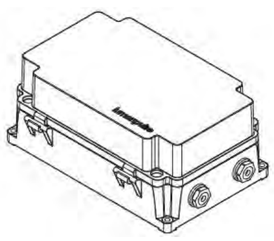

DMX/RDM control box. Up to six power and data outputs to fixtures or fixture runs. Consult CBX specification sheet and installation instructions for details. Lumenterminators provided with CBX (2x for daisy chain configuration, 6x for star configuration), consult factory to order spares.

CBX-ENET - Ethernet enabled (daisy chain or star configuration)

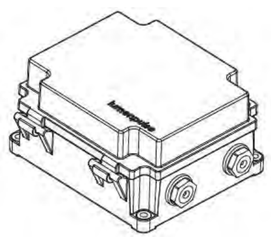

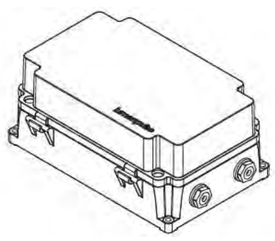

Ethernet control box. Up to four power and data outputs to fixture or fixture runs. Consult Ethernet CBX specification sheet and installation instructions for details.

LDB - Lumentalk Data Bridge

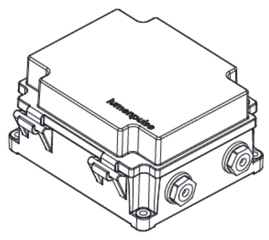

Lumentalk Data Bridge, 0-10V or DMX output. Consult LDB specification sheet for details.

Control systems (order separately)

LTN2 - Lumentone™ 2

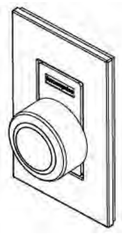

Lumentone 2 is a simple pre-programmed DMX 512 controller with a push button rotary dial and live feedback.

PHAROS - Pharos® kit

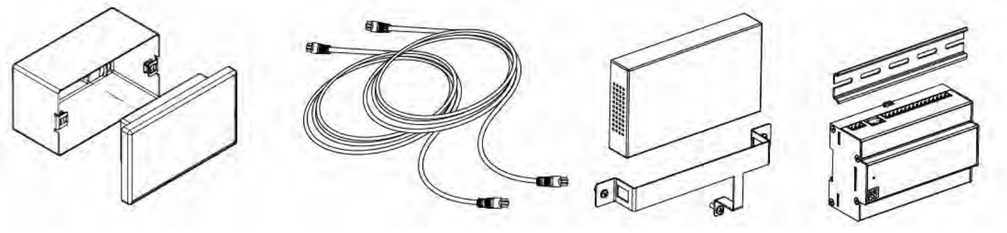

The Pharos kit, available for 1 or 2 DMX universes, allows for complete control of large lighting installations. 2 DMX universes kit shown.

Diagnostic and addressing tools (order separately)

LID - LumenID



LumenID is a diagnostic and addressing DMX/RDM tool. It must be specified on all DMX applications. Consult LID specification sheet for details.

LID-LT - LumentalkID

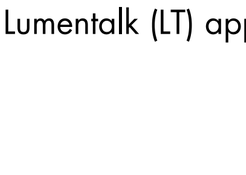

LumentalkID is a diagnostic and addressing tool. It must be specified for all Lumentalk (LT) applications. Consult LID-LT specification sheet for details.

Lumenpulse Group Inc. reserves the right to make changes to this product at any time without prior notice and such modification shall be effective immediately
2019.01.10 copyright © 2019 Lumenpulse Group Inc.
MG - R66

Resolution details

Resolution per foot: each 12 in section is addressed independently
DMX addresses:

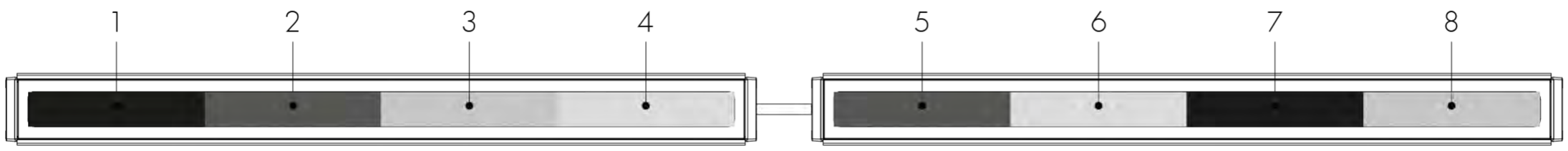

Resolution per fixture: each fixture is addressed independently
DMX addresses:

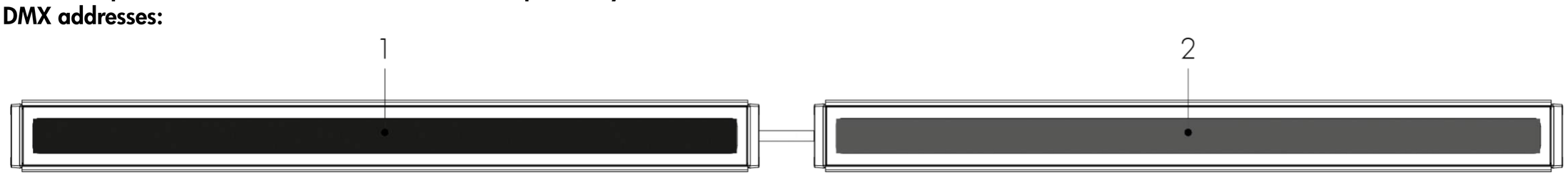

- 48 in fixtures shown.
- Applicable for DMX/RDM control option only. Fixture resolution can be configured on-site within the LumenID V3 software. A DMX/RDM enabled CBX is required.

Typical wiring diagrams

Wiring color code

UL Color Code	USE
Green	Ground
Black	Line
White	Line/Neutral
Red or Purple	0-10V / Data +
Orange	0-10V / Data -

On/Off control (NO)

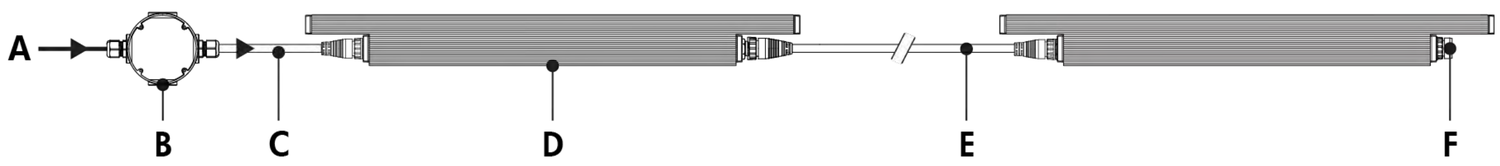

A - Power input (100-277V, wiring by others)
B - Junction box (by others)
C - Leader cable (LOGLC)
D - Lumenfacade
E - Jumper cable (LOGJC)
F - Sealing end cap

On/Off control (NO) - wiring detail

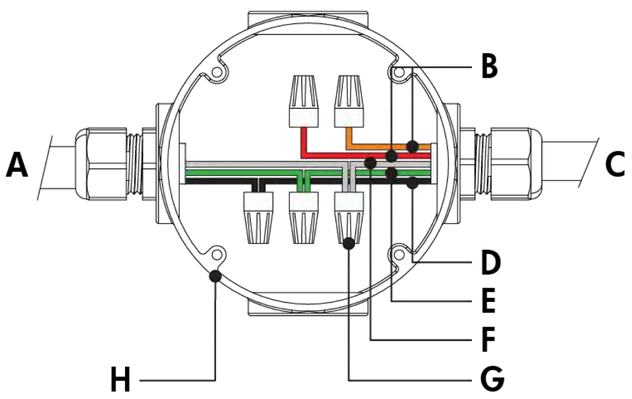

A - Power input
B - Not required
C - To fixture
D - Line
E - Ground
F - Line/Neutral
G - Wire-nuts (by others)
H - Junction box (by others)

- Consult factory for specific applications and maximum fixture count/cable length recommendations.
- ASHRAE version (not available for 12 in fixture lengths): 5 W/ft; Regular Output version: 8.5 W/ft; High Output version: 15.25 W/ft.

Lumenpulse Group Inc. reserves the right to make changes to this product at any time without prior notice and such modification shall be effective immediately
2019.01.10 copyright © 2019 Lumenpulse Group Inc.
MG - R66

Lumentalk (LT)

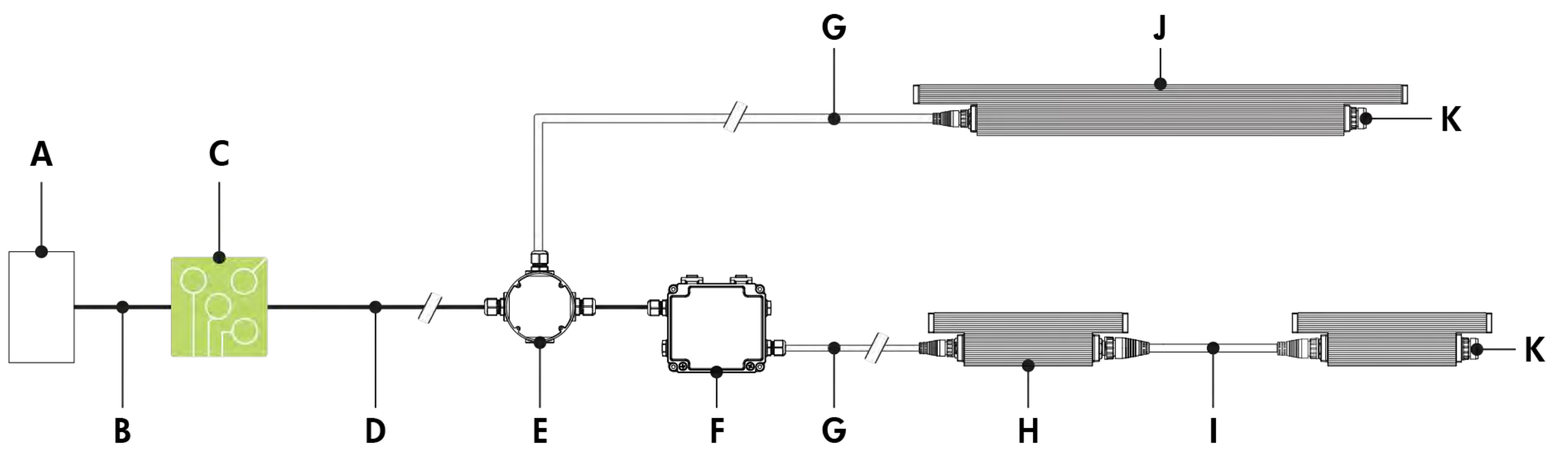

A - Dimmer/controller (order separately from Lumenpulse, or by others)
B - Data wiring (by others)
C - Lumentranslator (LTL-010, -DMX, -TRIAC, -DALI)
D - Power line (120-277V AC, wiring by others)
E - Junction box (by others)
F - Lumentalk Data Bridge (LDB-DIM or LDB-DMX)
G - Leader cable (LOGLC)
H - Lumenfacade 12 in
I - Jumper cable (LOGJC)
J - Lumenfacade (24 in, 36 in or 48 in fixture lengths)
K - Sealing end cap

Lumentalk (LT) - wiring detail

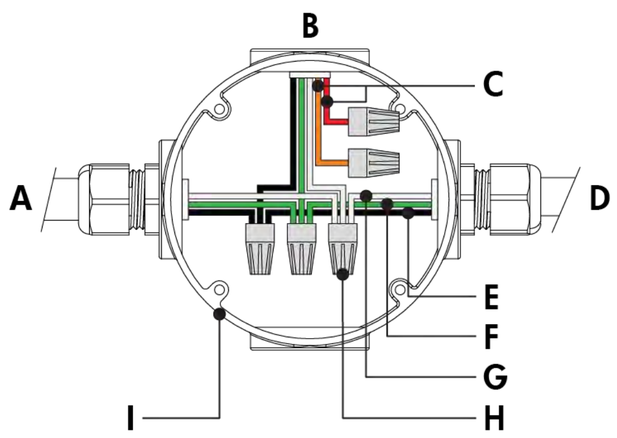

A - Power input (control over power line via Lumentalk system)
B - To fixture
C - Not required
D - To Lumentalk Data Bridge (for run lengths with 12 in fixtures)
E - Line
F - Ground
G - Line/Neutral
H - Wire-nuts (by others)
I - Junction box (by others)

- Consult factory for specific applications and maximum fixture count/cable length recommendations.
- Lumentalk Data Bridge required for 12 in fixture lengths, see LDB installation instructions for details.

- For applications with all fixtures controlled as 1 zone: fixtures and Lumentalk Data Bridge must be specified as DIM. Maximum of 10 fixtures per LDB-DIM, consult factory for applications that require additional capabilities.
- For applications with fixtures controlled individually: fixtures and Lumentalk Data Bridge must be specified as DMX, 2-step commissioning process: 1 - DMX/RDM system using LumenID software and a LID, 2 - Lumentalk system using LumentalkID software and a LID-LT. Maximum of 32 fixtures per LDB-DMX. Consult factory for details.

- For DMX applications: 1 DMX controller per Lumentalk network, maximum of 48 DMX channels per Lumentalk network (minimum step transition update rate is 1 second, minimum fade time between two colors is 1 minute). Consult factory for applications that require additional capabilities.
- Maximum of 1 transmitter (Lumentranslator or Lumenlink) per system.
- No third party fixtures allowed on the same circuit.
- Consult factory for DALI Lumentalk applications.
- 1% minimum dimming value.
- ASHRAE version (not available for 12 in fixture lengths): 5 W/ft; Regular Output version: 8.5 W/ft; High Output version: 15.25 W/ft.

Lumenpulse Group Inc. reserves the right to make changes to this product at any time without prior notice and such modification shall be effective immediately
2019.01.10 copyright © 2019 Lumenpulse Group Inc.
MG - R66

0-10V dimming (DIM)

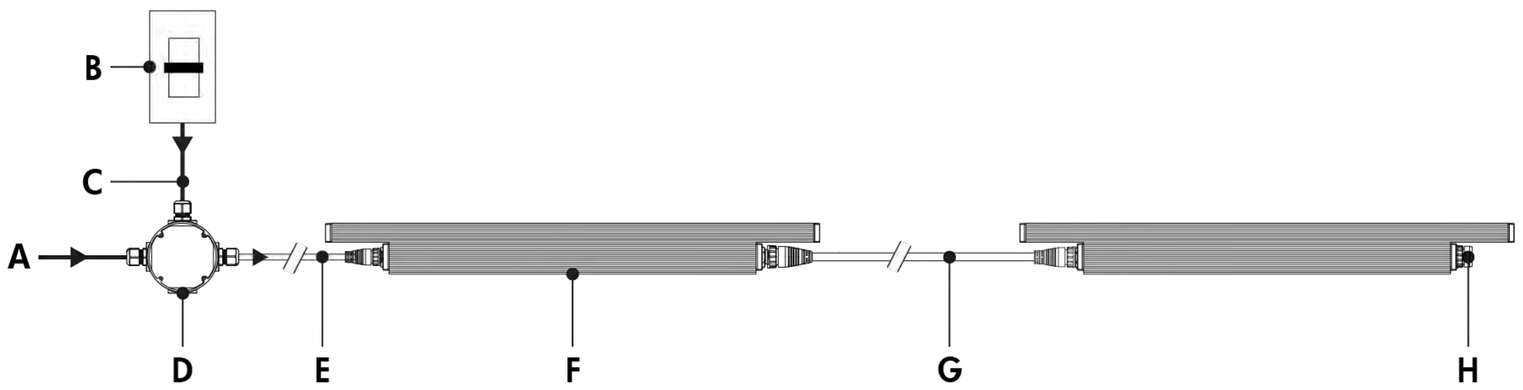

A - Power input (100-277V, wiring by others)
B - Dimmer (by others)
C - Data wiring (by others)
D - Junction box (by others)
E - Leader cable (LOGLC)
F - Lumenfacade
G - Jumper cable (LOGJC)
H - Sealing end cap

0-10V dimming (DIM) - wiring detail

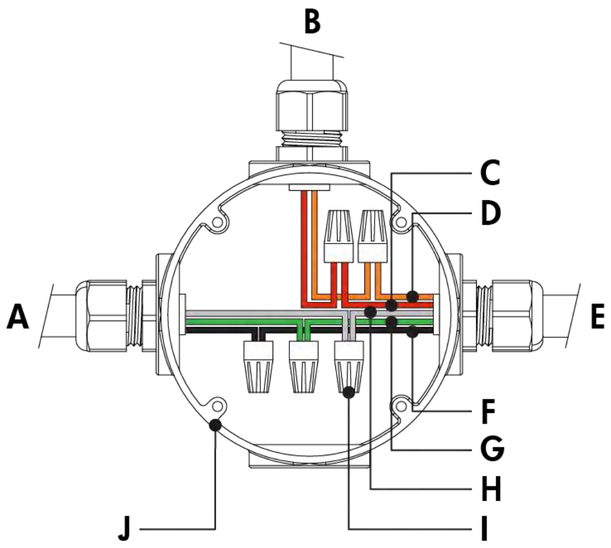

A - Power input
B - From dimmer (by others)
C - 0-10 V +
D - 0-10 V -
E - To fixture
F - Line
G - Ground
H - Neutral
I - Wire-nuts (by others)
J - Junction box (by others)

- Consult factory for specific applications and maximum fixture count/cable length recommendations.
- 0-10V mA ratings: passive dimmer (Current Sink): 3 mA per fixture, active dimmer (Current Source): 0.5 mA per fixture.
- 10% minimum dimming value.
- ASHRAE version (not available for 12 in fixture lengths): 5 W/ft; Regular Output version: 8.5 W/ft; High Output version: 15.25 W/ft.

lumenpulse™

1220 Marie-Victorin Blvd., Longueuil, QC J4G 2H9 CA **T** United States 617.307.5700 | Canada 1.877.937.3003 | 514.937.3003 **F** 514.937.6289
info@lumenpulse.com **www.lumenpulse.com** **www.lumenpulse.com/products/1046/lumenfacade**

Lumenpulse Group Inc. reserves the right to make changes to this product at any time without prior notice and such modification shall be effective immediately
2019.01.10 copyright © 2019 Lumenpulse Group Inc.
MG - R66

DALI dimming (DALI)

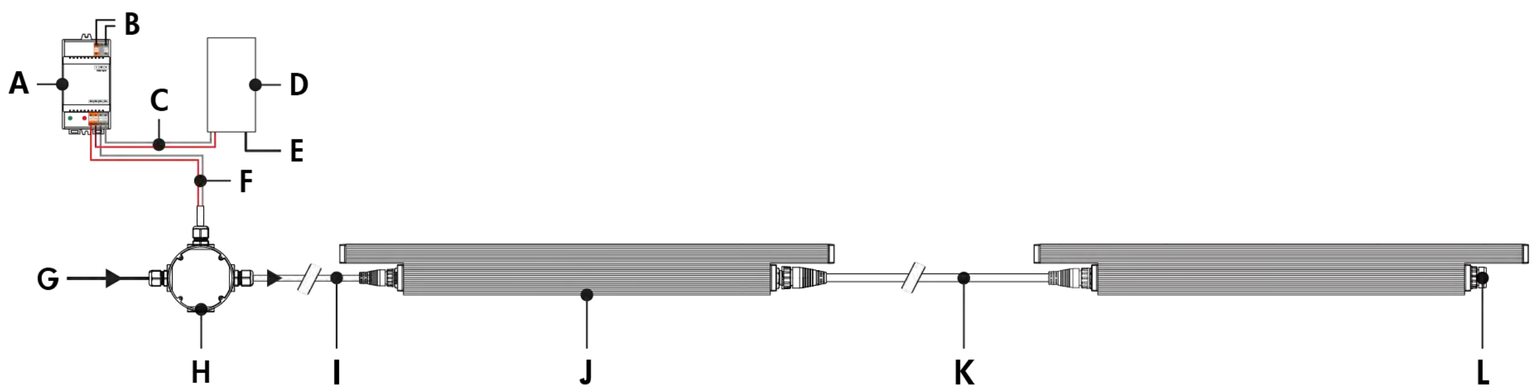

A - DALI bus power supply (by others)
B - Power input for DALI bus power supply (wiring by others)
C - Data output to DALI controller (wiring by others)
D - DALI controller (by others)
E - Power input for DALI controller (wiring by others)
F - Data output to fixture (wiring by others)
G - Power input (100-277V, wiring by others)
H - Junction box (by others)
I - Leader cable (LOGLC)
J - Lumenfacade
K - Jumper cable (LOGJC)
L - Sealing end cap

DALI dimming (DALI) - wiring detail

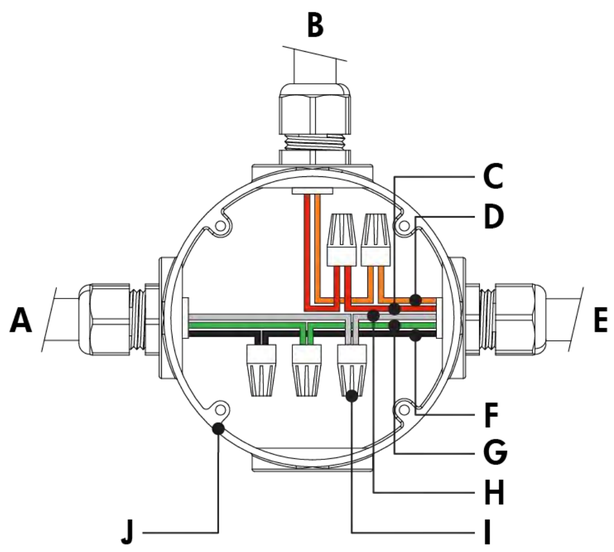

A - Power input
B - From DALI controller (by others)
C - Data +
D - Data -
E - To fixture
F - Line
G - Ground
H - Neutral
I - Wire-nuts (by others)
J - Junction box (by others)

- Consult factory for specific applications and maximum fixture count/cable length recommendations.
- Maximum of 64 DALI fixtures per DALI loop.
- 1% minimum dimming value.
- ASHRAE version (not available for 12 in fixture lengths): 5 W/ft; Regular Output version: 8.5 W/ft; High Output version: 15.25 W/ft.

Lumenpulse Group Inc. reserves the right to make changes to this product at any time without prior notice and such modification shall be effective immediately
2019.01.10 copyright © 2019 Lumenpulse Group Inc.
MG - R66

Lutron® EcoSystem® Enabled dimming (ES)

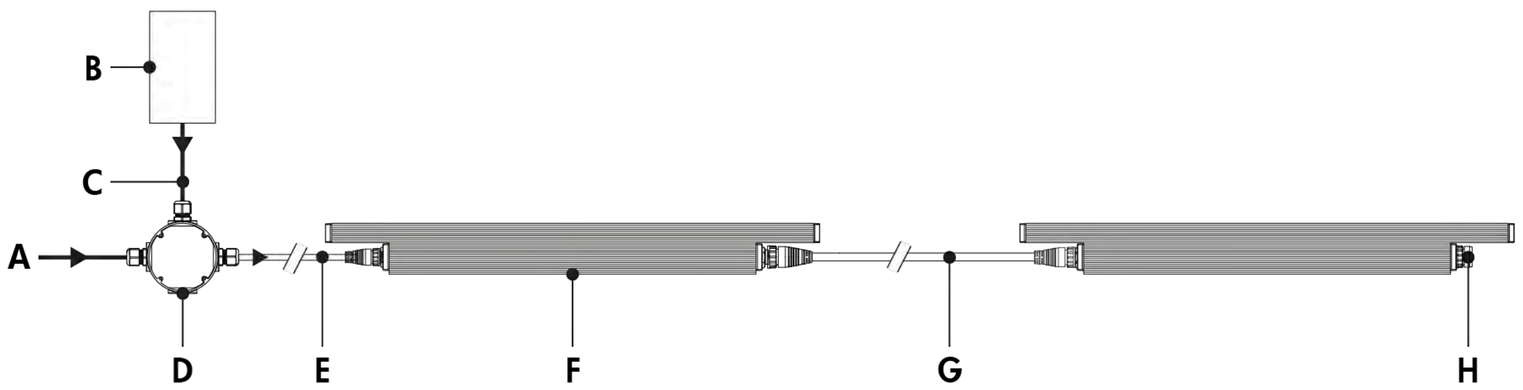

A - Power input (100-277V, wiring by others)
B - Lutron® EcoSystem® controller (by others)
C - Data wiring (by others)
D - Junction box (by others)
E - Leader cable (LOGLC)
F - Lumenfacade (24 in, 36 in or 48 in fixture lengths)
G - Jumper cable (LOGJC)
H - Sealing end cap

Lutron® EcoSystem® Enabled dimming (ES) - wiring detail

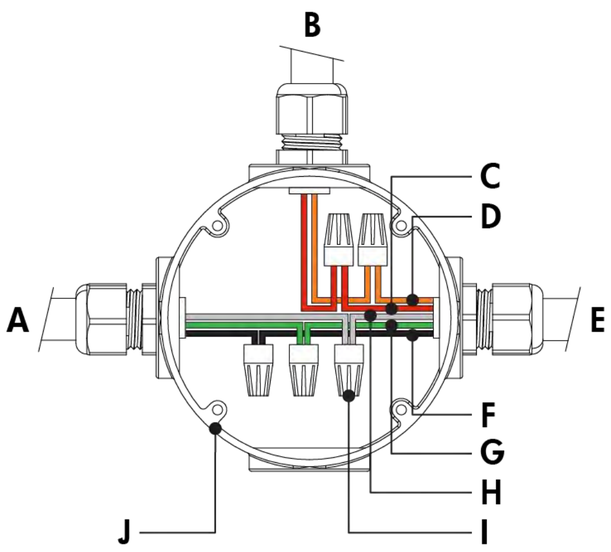

A - Power input
B - From Lutron® EcoSystem® controller (by others)
C - Data +
D - Data -
E - To fixture
F - Line
G - Ground
H - Neutral
I - Wire-nuts (by others)
J - Junction box (by others)

- Consult factory for specific applications and maximum fixture count/cable length recommendations.
- Each Lutron® EcoSystem® enabled fixture has its own address; for the example shown, there are a total of 2 EcoSystem® addresses.
- 1% minimum dimming value.
- ASHRAE version (not available for 12 in fixture lengths): 5 W/ft; Regular Output version: 8.5 W/ft; High Output version: 15.25 W/ft.

Lumenpulse Group Inc. reserves the right to make changes to this product at any time without prior notice and such modification shall be effective immediately
2019.01.10 copyright © 2019 Lumenpulse Group Inc.
MG - R66

Star Layout (DMX/RDM)

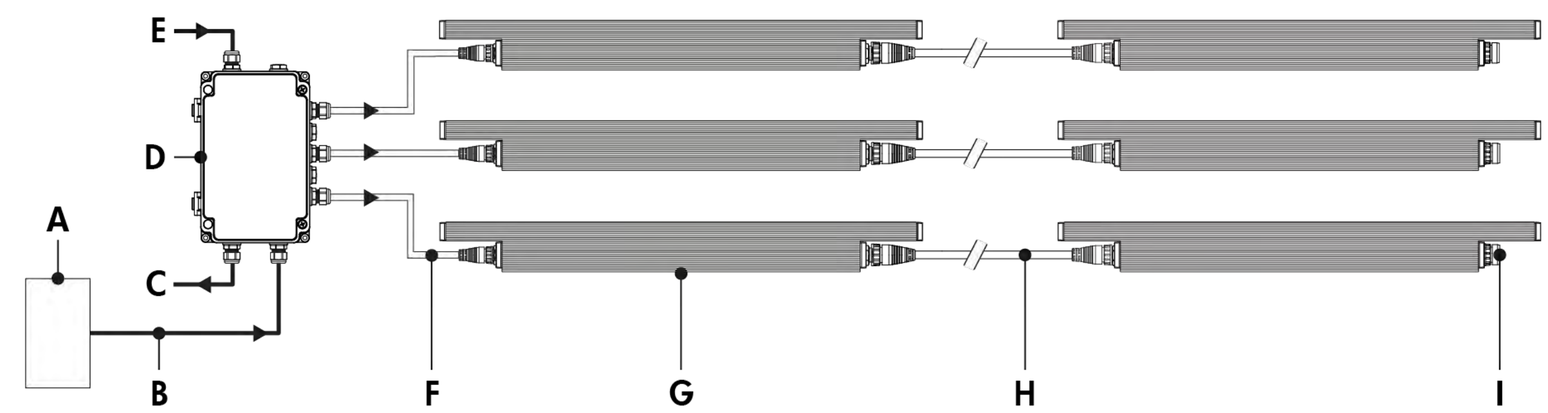

A - DMX/RDM controller (order separately from Lumenpulse, or by others)
B - Data input (Belden 9841 or equivalent, by others)
C - Data output to next CBX (optional, not isolated/not boosted)
D - CBX-ST
E - Power input (100-277V, wiring by others)
F - Leader cable (LOGLC)
G - Lumenfacade
H - Jumper cable (LOGJC)
I - Sealing end cap

Daisy Chain Layout (DMX/RDM)

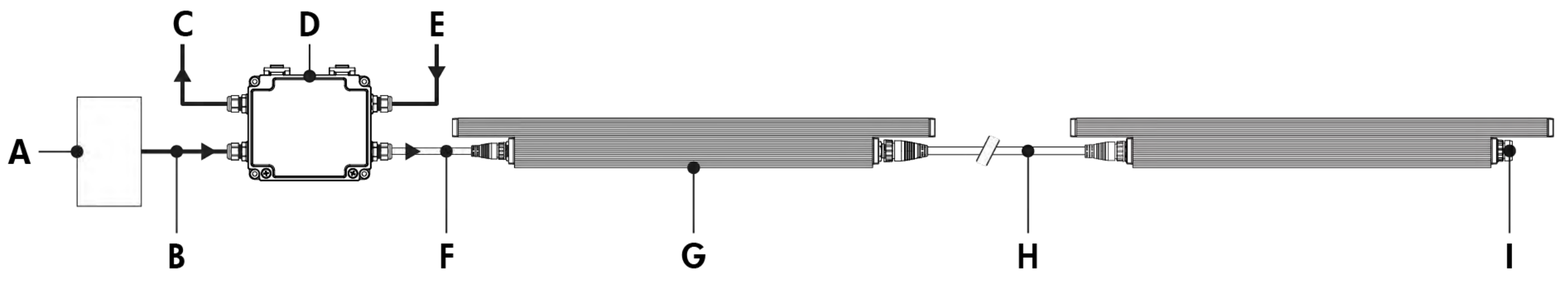

A - DMX/RDM controller (order separately from Lumenpulse, or by others)
B - Data input (Belden 9841 or equivalent, by others)
C - Data output to next CBX (optional, not isolated/not boosted)
D - CBX-DS
E - Power input (100-277V, wiring by others)
F - Leader cable (LOGLC)
G - Lumenfacade
H - Jumper cable (LOGJC)
I - Sealing end cap

Maximum run length

Configuration/Voltage	**120V**	**240V**	**277V**
LOG HO	68ft	76ft	84ft
LOG RO	120ft	128ft	128ft
LOG ASHRAE	128ft	128ft	128ft

Based on 15A maximum, 50 ft leader cable.

- Consult CBX installation instructions for additional wiring details.
- Consult factory for specific applications and maximum fixture count/cable length recommendations. Maximum run length calculations are typically based on 48 in fixtures.
- The DMX/RDM protocol states a maximum of 32 DMX/RDM enabled fixtures on any single run.
- Maximum of 4 DMX/RDM repeaters/CBX cascading in line.
- Maximum of 6 outputs per CBX-ST; maximum of 1 output per CBX-DS.
- Each fixture requires 1 DMX address.
- 1% minimum dimming value.
- ASHRAE version (not available for 12 in fixture lengths): 5 W/ft; Regular Output version: 8.5 W/ft; High Output version: 15.25 W/ft.

lumenpulse™

1220 Marie-Victorin Blvd., Longueuil, QC J4G 2H9 CA **T** United States 617.307.5700 | Canada 1.877.937.3003 | 514.937.3003 **F** 514.937.6289
info@lumenpulse.com **www.lumenpulse.com** **www.lumenpulse.com/products/1046/lumenfacade**

Lumenpulse Group Inc. reserves the right to make changes to this product at any time without prior notice and such modification shall be effective immediately
2019.01.10 copyright © 2019 Lumenpulse Group Inc.
MG - R66

How to order

1	2	3	4	5	6	7	8

9

1 . Housing [1]

LOG ASHRAE	Lumenfacade™, 5 W/ft ASHRAE compliant [2]
LOG RO	Lumenfacade™ Regular Output, 8.5 W/ft
LOG HO	Lumenfacade™ High Output, 15.25 W/ft

[1] Power consumption is typically 20% higher for 12 in fixture lengths.

[2] ASHRAE version not available for 12 in fixture lengths.

2 . Voltage

100	100 volts
120	120 volts
208	208 volts
220	220 volts
240	240 volts
277	277 volts

3 . Length

12	13 3/8 in (4.5 lbs) [1] [2]
24	25 3/8 in (7 lbs)
36	37 3/8 in (10.5 lbs)
48	49 3/8 in (14 lbs)

[1] Power consumption is typically 20% higher for 12 in fixture lengths.

[2] To connect 12 in fixture lengths to the Lumentalk system, DIM or DMX/RDM must be specified as the control option, and a Lumentalk Data Bridge (LDB) is required. See the typical wiring diagrams in the specification sheet for details.

4 . Color and Color Temperature [1]

22K	2200K
27K	2700K
30K	3000K
35K	3500K
40K	4000K
RD	Red [2]
GR	Green [2]
BL	Blue [2]

[1] Consult factory for availability of static Royal Blue, 6500K and 90+ CRI.

[2] Static colors made to order 8-10 weeks.

5 . Optics

WWLF	Asymmetric Wallwash, left feed
WWRF	Asymmetric Wallwash, right feed
8x8	8° x 8° [1]
10x10	10° x 10° [1]
10x30	10° x 30°
10x60	10° x 60°
10x90	10° x 90°
15x25	15° x 25°
30x30	30° x 30°
30x60	30° x 60°
35x35	35° x 35°
50x80	50° x 80°
60x60	60° x 60°
80x80	80° x 80°
90x90	90° x 90

[1] For best results use with HO fixtures at a 6 in setback from surface. Contact factory for application support.

6 . Mounting Options

SAM	Slim Adjustable Mounting
UMP	Fixed Mounting [1]
UMAS	Universal Adjustable Mounting [1]
WAM2	Adjustable Wall Mounting 2 in
WAM6	Adjustable Extended Arm Mounting 6 in
WAM12	Adjustable Extended Arm Mounting 12 in
WAM18	Adjustable Extended Arm Mounting 18 in

[1] Suitable to use when 3GV option is specified.

Lumenpulse Group Inc. reserves the right to make changes to this product at any time without prior notice and such modification shall be effective immediately
2019.01.10 copyright © 2019 Lumenpulse Group Inc.
MG - R66

7 . Finish

BK	Black Sandtex®
BRZ	Bronze Sandtex®
SI	Silver Sandtex®
WH	Smooth white
CC	Custom color and finish (please specify RAL color) (1)

(1) Lumenpulse offers a wide selection of RAL CLASSIC (K7) colors with a smooth texture and high-gloss finish. Please consult factory for a list of available K7 colors, other RAL textures and glosses, or to match alternate color charts. Final color matching results may vary.

8 . Control

NO	On/Off control
LT	Lumentalk (1) (2)
DIM	0-10V dimming
DALI	DALI dimming
ES	Lutron® EcoSystem® Enabled dimming (3)
DMX/RDM	DMX/RDM enabled (4)

(1) To connect 12 in fixture lengths to the Lumentalk system, DIM or DMX/RDM must be specified as the control option, and a Lumentalk Data Bridge (LDB) is required. See the typical wiring diagrams in the specification sheet for details.

(2) A Lumentranslator and LumentalkID (LIDLT) must be specified for Lumentalk applications. Consult Lumentranslator and Lumentalk pages and specification sheets for details.

(3) Available for 24 in (ASHRAE and RO only), 36 in and 48 in fixture lengths only.

(4) A control box (CBX) and LumenID (LID) must be specified.

9 . Options

ETE	End-to-end configuration (factory installed 16 in black input cable included)
CRC	Corrosion-resistant coating for hostile environments (1)
3GV	3G ANSI C136.31 Vibration Rating for bridge applications (2)
CE	CE (certification covers European Economic Area) (3)

(1) Use only when exposed to salt spray and harsh chemicals. This option is not required for normal outdoor exposure.

(2) Available with UMP and UMAS mounting options only.

(3) Consult European specification sheet and installation instructions for CE wiring information.

Lumenpulse Group Inc. reserves the right to make changes to this product at any time without prior notice and such modification shall be effective immediately
2019.01.10 copyright © 2019 Lumenpulse Group Inc.
MG - R66

Specification Sheet

lumenbeam

Grande

WHITE AND STATIC COLOURS

Project Name _____ **Qty** _____

Type _____ **Catalog / Part Number** _____



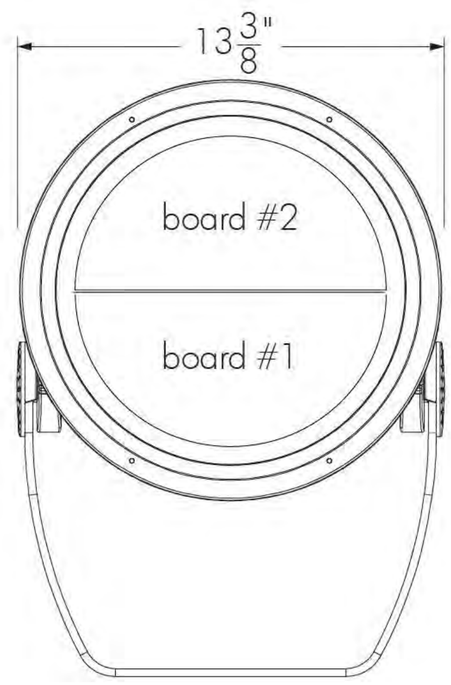

Front view

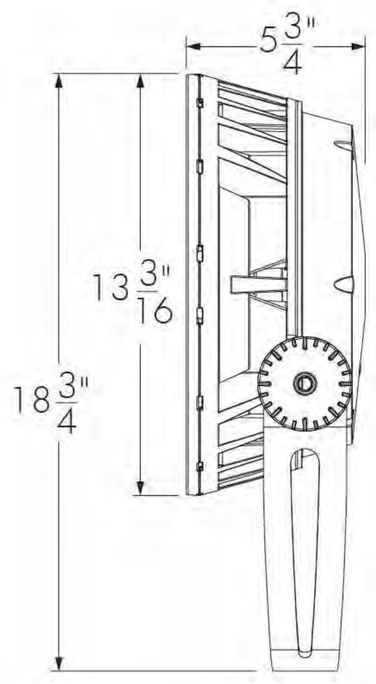

Side view

Photometric Summary

4000K	Delivered output (lm)	Intensity (peak cd)
XN	8,425	593,570
VN	6,313	361,807
NS	6,667	222,046
NF	6,437	44,962
FL	6,286	16,798
WFL	5,635	5,469

Photometric performance is measured in compliance with IESNA LM-79-08.

Optics

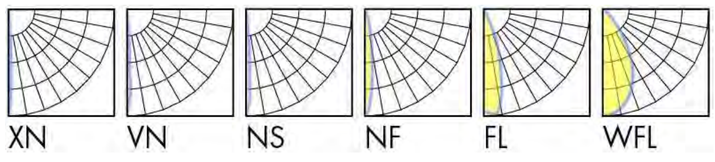

Control

ON/OFF 1-10V DALI

lumentalk DMXrdm LUTRON EcoSystem Enabled

Rating

cULus CE RoHS

Description

The Lumenbeam Grande is a high-performance, 100W luminaire for lighting architectural exteriors and facades. It has numerous options including optics for flood or accent lighting; a choice of colour temperatures and colours; various mounting options, accessories, spread lenses and controls.

Features

Colour and Colour Temperature	2200K, 2700K, 3000K, 3500K, 4000K, 5700K, Red, Green, Blue
Optics (nominal distribution)	4°, 6°, 10°, 20°, 40°, 60°
Optical Option	Linear spread lens horizontal distribution, Linear spread lens vertical distribution
Options	Short Yoke, 3G ANSI C136.31 Vibration Rating for bridge applications, Corrosion-resistant coating for hostile environments
Power Consumption	100 W
Warranty	5-year limited warranty

Performance

Delivered Output	8,425 lm (4000K, XN optic)
Delivered Intensity	593,570 cd at nadir (4000K, XN optic)
Illuminance at Distance	Minimum 1 lx at 2526.2 ft distance (4000K, XN optic)
Colour Consistency	2 SDCM
Colour Rendering	CRI 80+
Lumen Maintenance	L70 120,000 hrs (Ta 25 °C)

lumenpulse™

11/13 Weston Street, Unit no 13.3.2 London, SE1 3ER GB **T** +44 (0) 2031 765370 info@lumenpulse.com **www.lumenpulsegroup.com**

Lumenpulse Group Inc. reserves the right to make changes to this product at any time without prior notice and such modification shall be effective immediately
2017.11.28 copyright © 2017 Lumenpulse Group Inc.
MG - R14

Specification Sheet

lumenbeam

Grande

WHITE AND STATIC COLOURS

Physical

Housing Material	Low copper content high pressure die-cast aluminium
Yoke Material	Heavy aluminium (standard yoke included)
Lens Material	Clear tempered glass
Hardware Material	Stainless steel
Surface Finish	Electrostatically applied polyester powder coat
Weight	24 lbs
EPA	Front = 1.6 sq ft, Side = 0.97 sq ft

Electrical and control

Voltage	100 to 277 volts
Fixture Cable	Power and data in 1 cable, 3 ft cord standard (5 x 1.5 sq mm), other lengths available
Inrush Current (peak)	55A @230VAC
Resolution (DMX/RDM)	Per fixture, 8-bit or 16-bit
Control	On/Off control, Lumentalk, 1-10V dimming, DALI dimming, Lutron® EcoSystem® Enabled dimming, DMX/RDM enabled

Environmental

Operating Temperature	-13 °F to 122 °F
IP Rating	IP66
IK Rating	IK09

Accessories (order separately)

Control Boxes	Power and control box - daisy chain configuration, Power and control box - star configuration
Control Systems	Lumentouch 2.0™, Lumencue
Diagnostic and Addressing Tools	LumenID, LumentalkID

Lumenpulse Group Inc. reserves the right to make changes to this product at any time without prior notice and such modification shall be effective immediately
2017.11.28 copyright © 2017 Lumenpulse Group Inc.
MG - R14

Specification Sheet

lumenbeam

Grande

WHITE AND STATIC COLOURS

Mounting options

SY - Short yoke

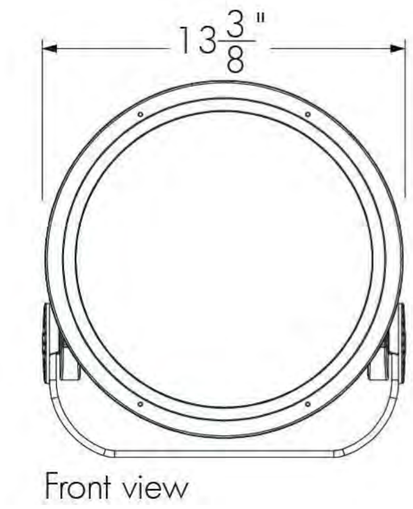

Front view

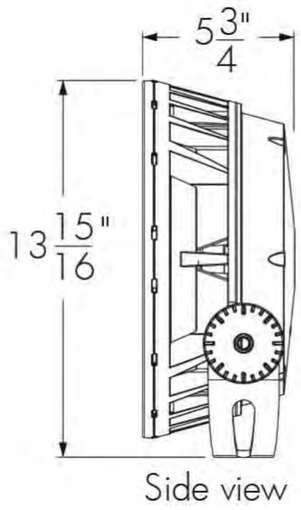

Side view

Mounting details

Mounting hole pattern - standard and short yoke

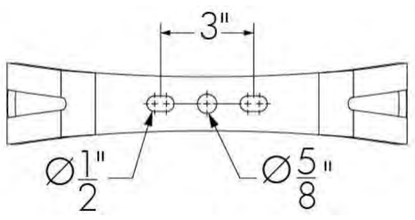

Adjustable pivot limits

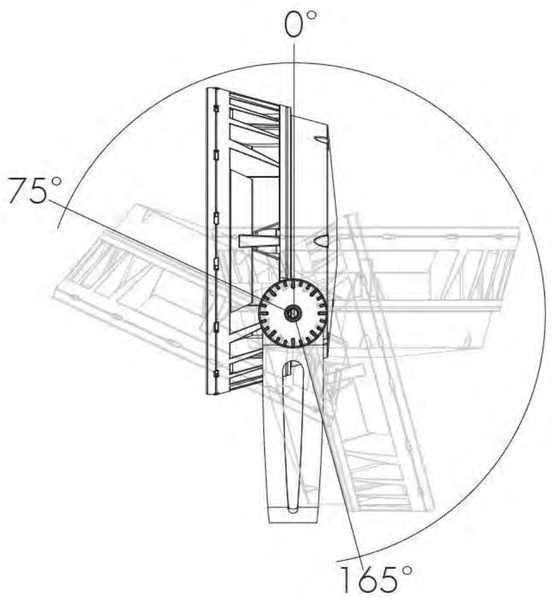

Standard yoke

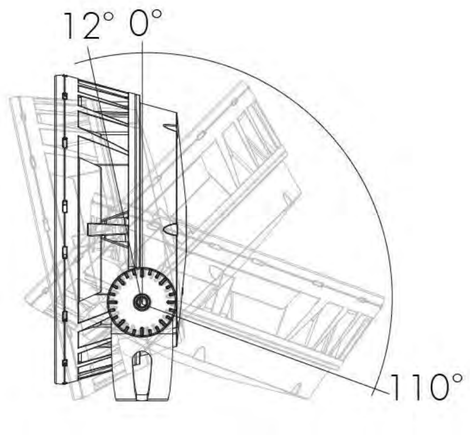

Short yoke

Optical options

LSLH - Linear spread lens horizontal distribution
LSLV - Linear spread lens vertical distribution



LSLH



LSLV

	Beam angle with LSLH/LSLV
XN	5° x 57°
VN	8° x 60°
NS	9° x 60°
NF	18° x 65°
FL	32° x 72°

Factory installed, not adjustable on site. Not available for WFL optic.
See 'Optical Accessories' section for field adjustable spread lens (LSLA).

lumenpulse™

11/13 Weston Street, Unit no 13.3.2 London, SE1 3ER GB **T** +44 (0) 2031 765370 info@lumenpulse.com **www.lumenpulsegroup.com**

Lumenpulse Group Inc. reserves the right to make changes to this product at any time without prior notice and such modification shall be effective immediately
2017.11.28 copyright © 2017 Lumenpulse Group Inc.
MG - R14

Specification Sheet

lumenbeam

Grande

WHITE AND STATIC COLOURS

Mounting accessories (order separately)

Round pole mounting accessory

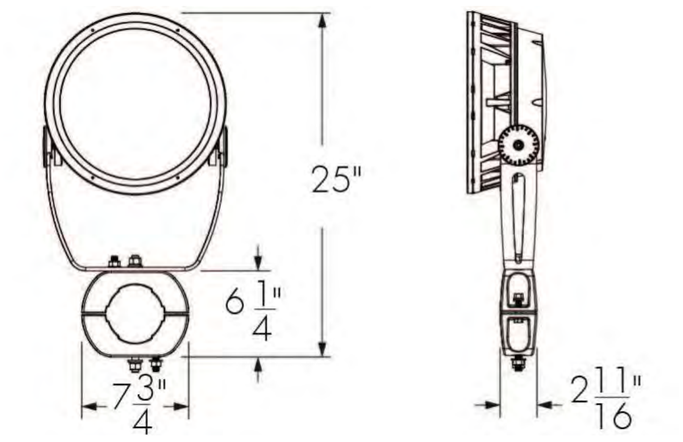

PM4 model shown.
Consult factory for square pole section.

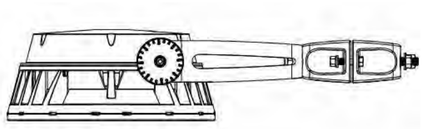

PM4-1, PM4.5-1, PM5-1 - Round pole mounting accessory - single fixture

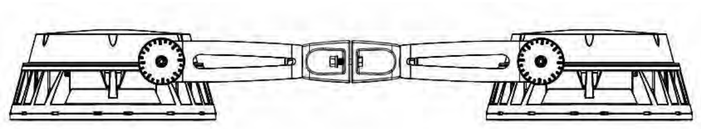

PM4-5, PM4.5-2, PM5-2 - Round pole mounting accessory - twin fixtures
*One bracket assembly is supplied per 2 fixtures unless otherwise specified.

	PM4	PM4.5	PM5
For pole Ø	4" ± 1/16	4.5" ± 1/16	5" ± 1/16

Consult factory for other pole diameters.

Tenon adapter

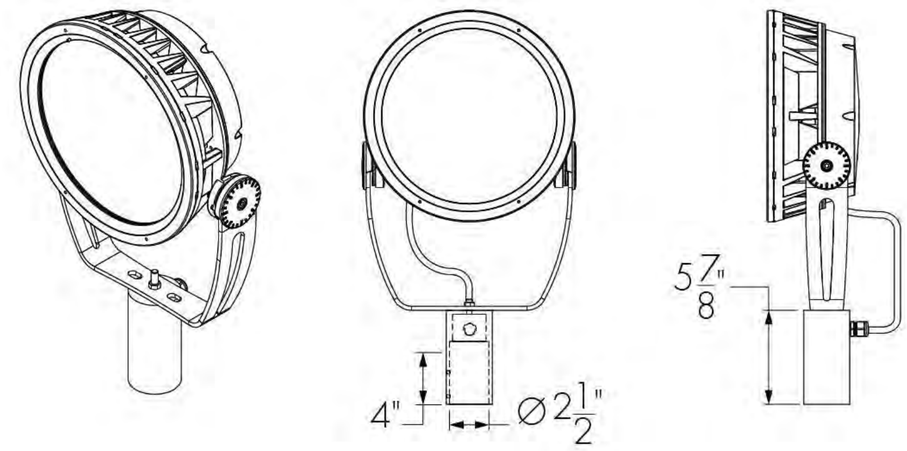

TN2 - Tenon adapter to fit on 2 3/8 in O.D. tenon

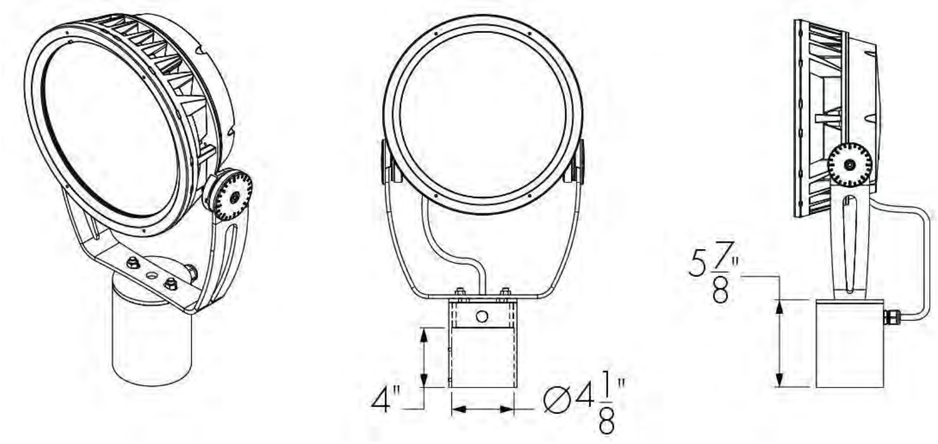

TN4 - Tenon adpater to fit on 4 in O.D. tenon

Lumenpulse Group Inc. reserves the right to make changes to this product at any time without prior notice and such modification shall be effective immediately
2017.11.28 copyright © 2017 Lumenpulse Group Inc.
MG - R14

Specification Sheet

lumenbeam

Grande

WHITE AND STATIC COLOURS

Optical accessories (order separately)

Installed optical accessories will affect the maximum pivot limits for each mounting option, consult factory for details.

SN - Snoot

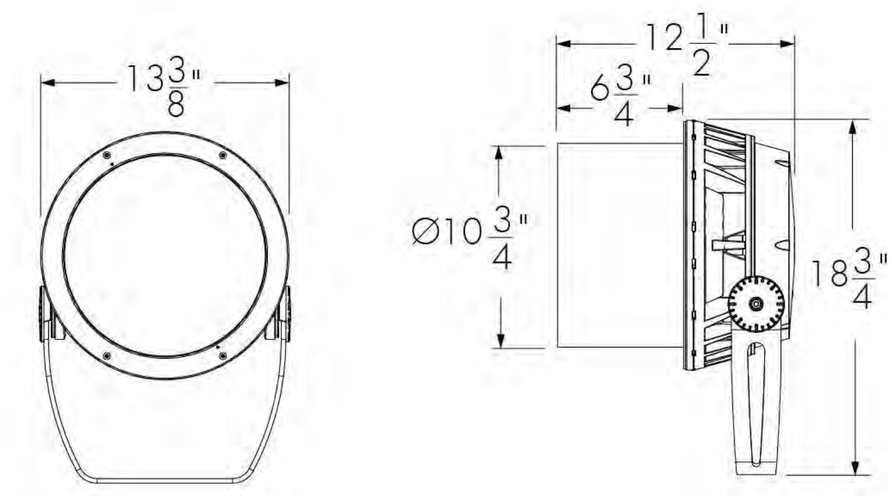

LBGSN-FINISH-BK
Interior surface painted black. Please specify desired exterior FINISH from list of available finishes.

SNW - Snoot wide

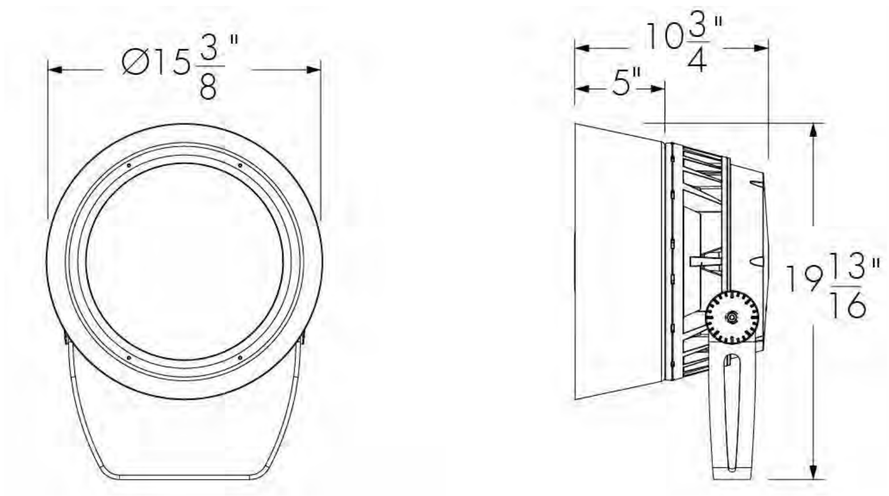

LBGSNW-FINISH-BK
Interior surface painted black. Please specify desired exterior FINISH from list of available finishes.

VS - Visor

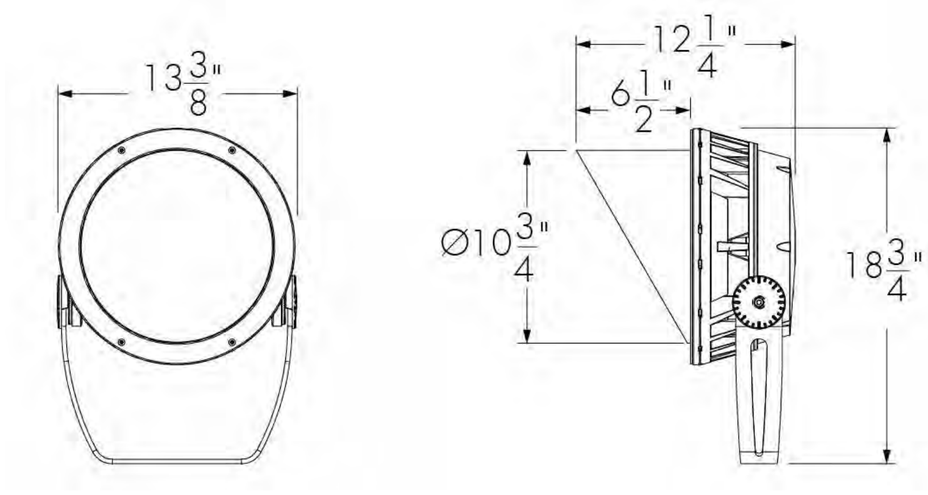

LBGVS-FINISH-BK
Interior surface painted black. Please specify desired exterior FINISH from list of available finishes.

LSLA - Linear spread lens adjustable

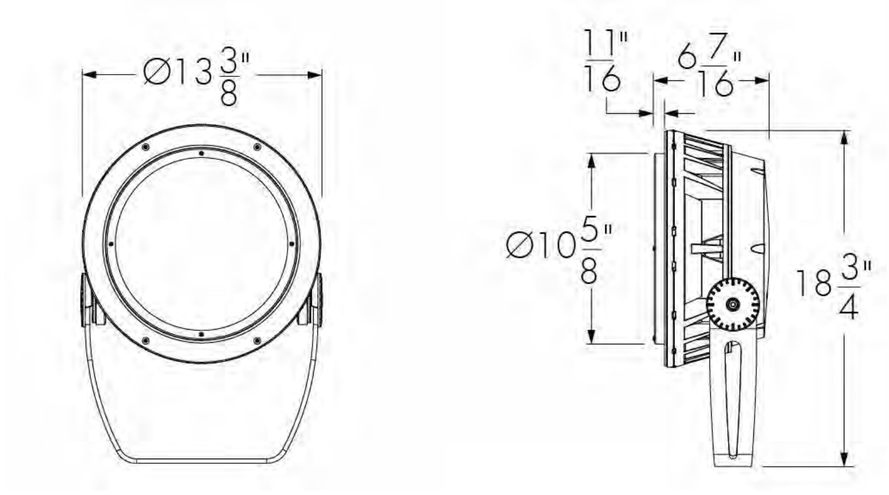

LBGLSLA-FINISH
Please specify desired exterior FINISH from list of available finishes.

WG - Wire guard

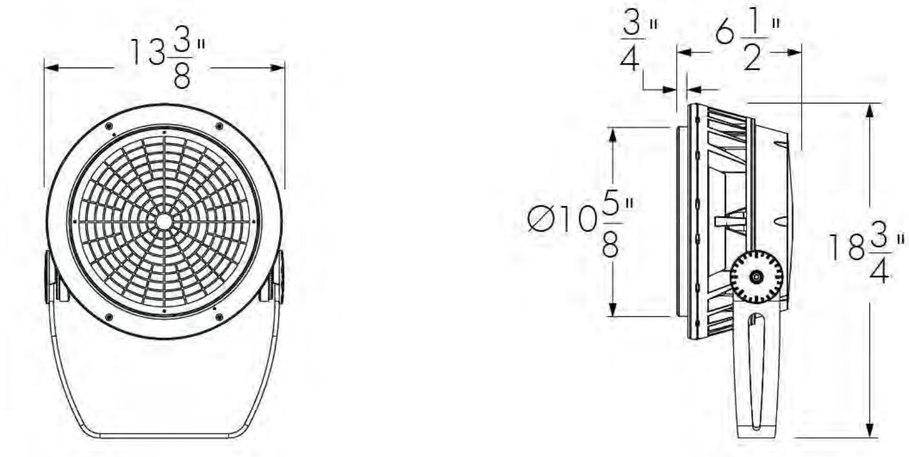

LBGWG-FINISH
Please specify desired exterior FINISH from list of available finishes.

Accessory combinations

+	Snoot	Snoot wide	Visor
Linear spread lens adjustable	YES	NO*	YES
Wire guard	YES	NO	YES

Accessory combinations must be ordered together on a single line
Ex: A snoot + wire guard combination order code is LBGSNWG-BK-BK.
*Consult factory for a linear spread lens adjustable + snoot wide combination.

lumenpulse™ 11/13 Weston Street, Unit no 13.3.2 London, SE1 3ER GB **T** +44 (0) 2031 765370 info@lumenpulse.com **www.lumenpulsegroup.com**

Lumenpulse Group Inc. reserves the right to make changes to this product at any time without prior notice and such modification shall be effective immediately
2017.11.28 copyright © 2017 Lumenpulse Group Inc.
MG - R14

Specification Sheet

lumenbeam

Grande

WHITE AND STATIC COLOURS

Available exterior finishes for optical accessories

BK - Black Sandtex®
BRZ - Bronze Sandtex®
SI - Silver Sandtex®
WH - Smooth white
BKTX - Textured black
BRZTX - Textured bronze, non-metallic
GRATX - Textured medium grey
GRNTX - Textured green
WHTX - Textured white
CC - Custom colour and finish (please specify RAL colour)*

*Lumenpulse offers a wide selection of RAL CLASSIC (K7) colours with a smooth texture and high-gloss finish. Please consult factory for a list of available K7 colours, other RAL textures and glosses, or to match alternate colour charts. Final colour matching results may vary.

lumenpulse™ 11/13 Weston Street, Unit no 13.3.2 London, SE1 3ER GB **T** +44 (0) 2031 765370 info@lumenpulse.com **www.lumenpulsegroup.com**

Lumenpulse Group Inc. reserves the right to make changes to this product at any time without prior notice and such modification shall be effective immediately
2017.11.28 copyright © 2017 Lumenpulse Group Inc.
MG - R14

Specification Sheet

lumenbeam

Grande

WHITE AND STATIC COLOURS

Typical wiring diagrams

Wiring colour code

CE Colour Code	USE
Yellow/Green Brown Blue Black Grey	Ground Live 100-277V Neutral 1-10V / Data + 1-10V / Data -

CE Class II Colour Code	USE
Brown Blue Black 1 Black 2 Grey	Live 100-277V Neutral Signal common (DMX/RDM only) 1-10V / Data + 1-10V / Data -

On/Off control (NO)

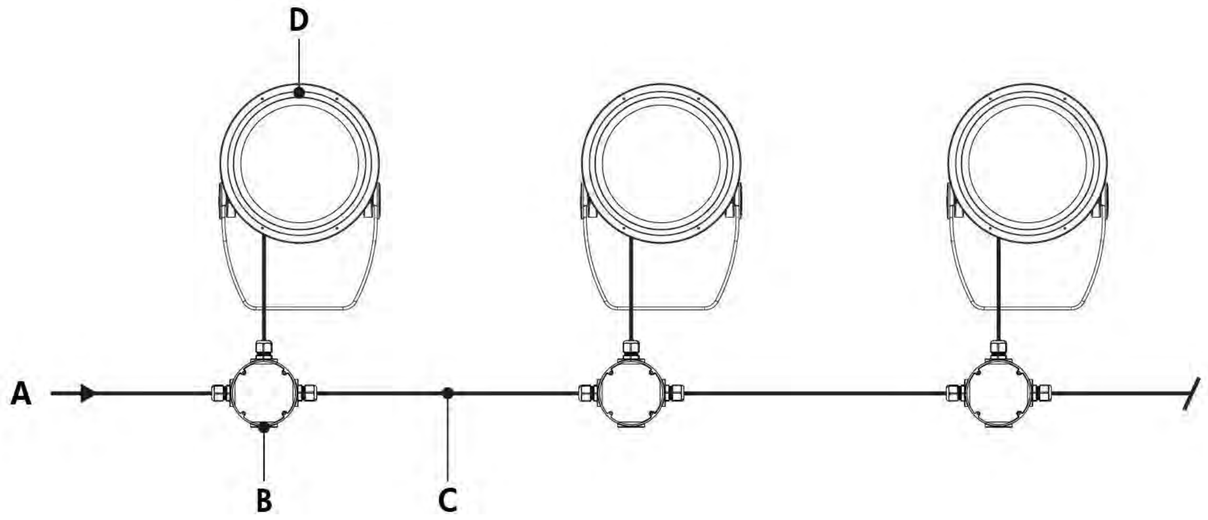

A - Power input (100-277V)
B - Junction box (by others)
C - Power wiring (by others)
D - Lumenbeam Grande

On/Off control (NO) - wiring detail - CE

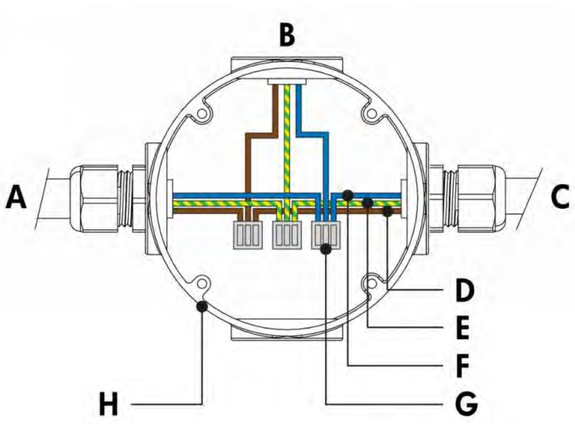

A - Power input or from previous fixture
B - To fixture
C - To next fixture
D - Live
E - Ground
F - Neutral
G - Terminal connector (by others)
H - Junction box (by others)

On/Off control (NO) - wiring detail - CE Class II option

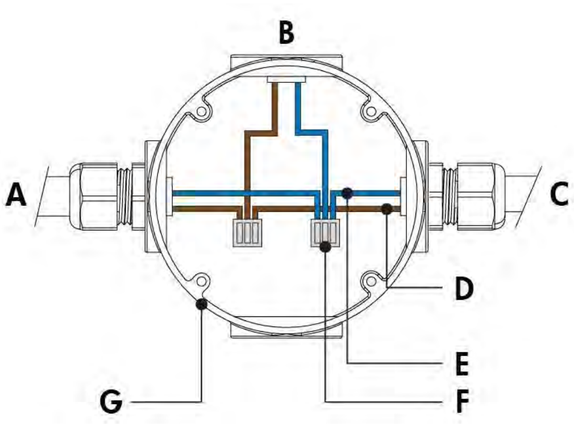

A - Power input or from previous fixture
B - To fixture
C - To next fixture
D - Live
E - Neutral
F - Terminal connector (by others)
G - Junction box (by others)

- Consult factory for specific applications and maximum fixture count/cable length recommendations.
- 100 watts per fixture.

Lumenpulse Group Inc. reserves the right to make changes to this product at any time without prior notice and such modification shall be effective immediately
2017.11.28 copyright © 2017 Lumenpulse Group Inc.
MG - R14

Specification Sheet

lumenbeam

Grande

WHITE AND STATIC COLOURS

Lumentalk (LT)

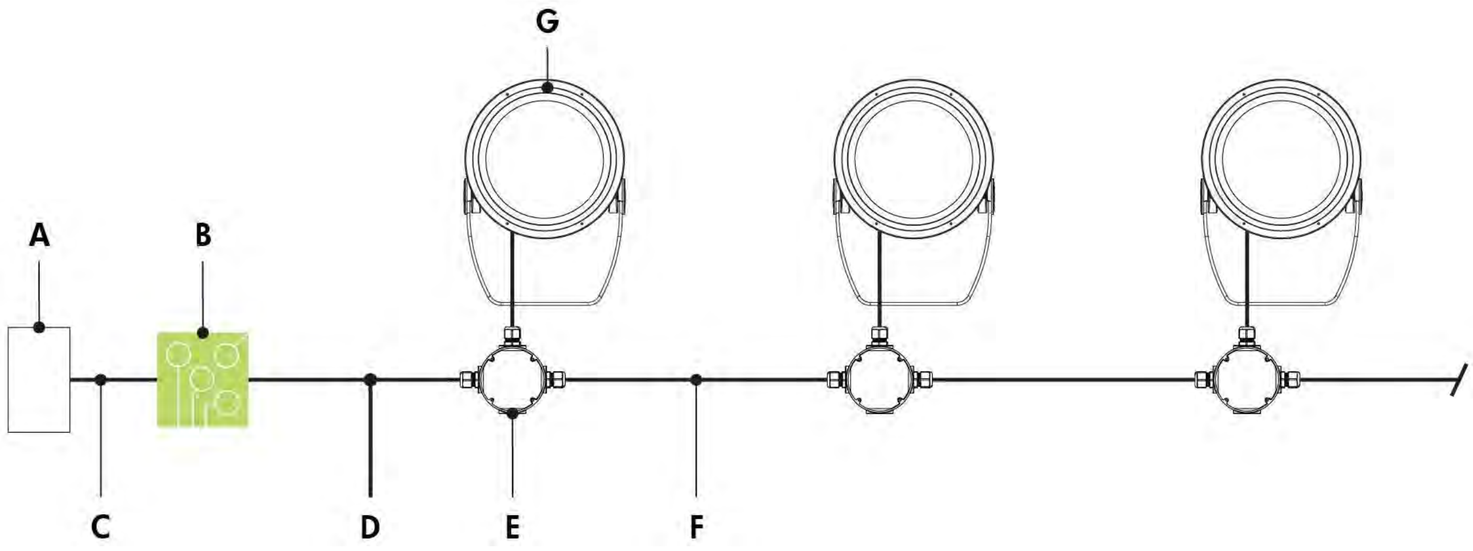

A - Third party dimmer/controller
B - Lumentranslator (LTL-010, -DMX, -TRIAC, -DALI)
C - Data wiring (by others)
D - Power line (120-277V AC)
E - Junction box (by others)
F - Power wiring (by others)
G - Lumenbeam Grande

Lumentalk (LT) - wiring detail

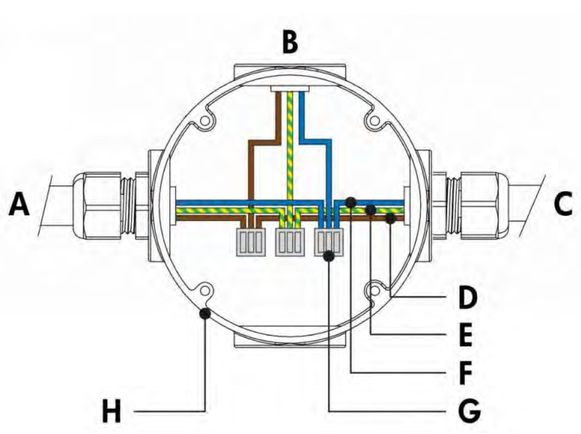

A - Power input (control over power line via Lumentalk system) or from previous fixture
B - To fixture
C - To next fixture
D - Live
E - Ground
F - Neutral
G - Terminal connector (by others)
H - Junction box (by others)

- Consult factory for specific applications and maximum fixture count/cable length recommendations.
- Lumentalk enabled fixtures must be commissioned using LumentalkID software and a LID-LT. Consult factory for details.
- Maximum of 1 transmitter (Lumentranslator or Lumenlink) per system.
- No third party fixtures allowed on the same circuit.
- For DMX applications: 1 DMX controller per Lumentalk network, maximum of 48 DMX channels per Lumentalk network (minimum step transition update rate is 1 second, minimum fade time between two colours is 1 minute). Consult factory for applications that require additional capabilities.
- Consult factory for DALI Lumentalk applications.
- 1% minimum dimming value.
- 100 watts per fixture.

11/13 Weston Street, Unit no 13.3.2 London, SE1 3ER GB **T** +44 (0) 2031 765370 info@lumenpulse.com **www.lumenpulsegroup.com**

Lumenpulse Group Inc. reserves the right to make changes to this product at any time without prior notice and such modification shall be effective immediately
2017.11.28 copyright © 2017 Lumenpulse Group Inc.
MG - R14

Specification Sheet

lumenbeam

Grande

WHITE AND STATIC COLOURS

1-10V dimming (DIM)

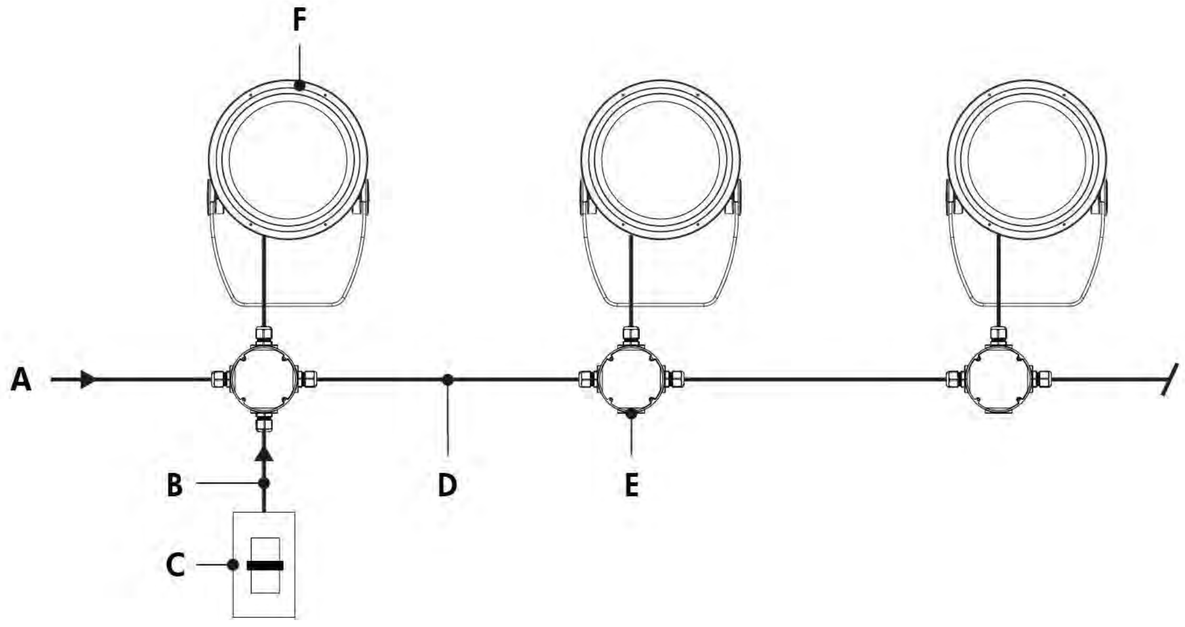

A - Power input (100-277V)
B - Data wiring (by others)
C - Third party dimmer
D - Power and data wiring (by others)
E - Junction box (by others)
F - Lumenbeam Grande

1-10V dimming (DIM) - wiring detail - CE

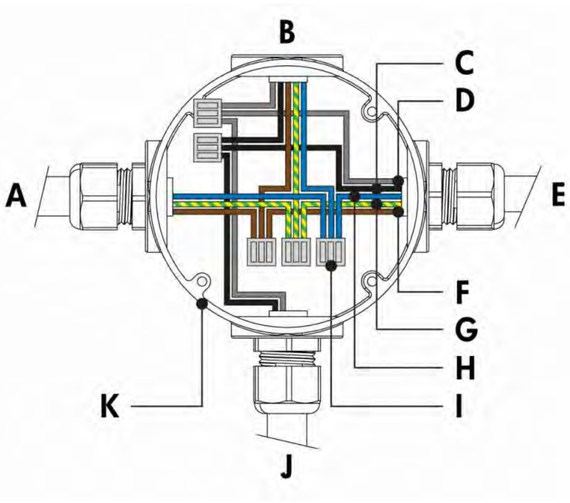

A - Power input or from previous fixture
B - To fixture
C - 1-10 V +
D - 1-10 V -
E - To next fixture
F - Live
G - Ground
H - Neutral
I - Terminal connector (by others)
J - From third party dimmer
K - Junction box (by others)

1-10V dimming (DIM) - wiring detail – CE Class II

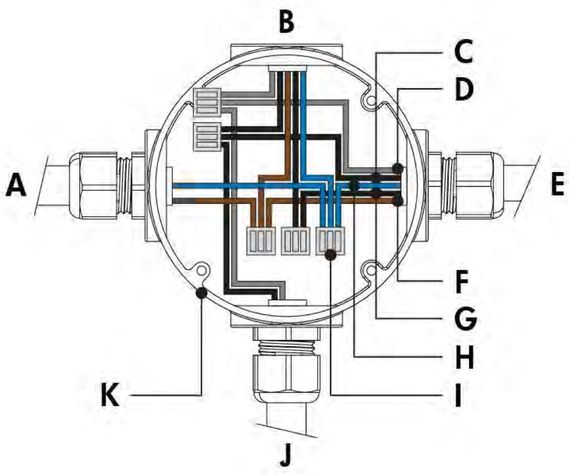

A - Power input or from previous fixture
B - To fixture
C - 1-10 V +
D - 1-10 V -
E - To next fixture
F - Live
G - Signal common
H - Neutral
I - Terminal connector (by others)
J - From third party dimmer
K - Junction box (by others)

- Consult factory for specific applications and maximum fixture count/cable length recommendations.
- 1-10V mA ratings: passive dimmer (Current Sink): 3mA per fixture, active dimmer (Current Source): 0.5mA per fixture.
- 10% minimum dimming value.
- 100 watts per fixture.

lumenpulse™ 11/13 Weston Street, Unit no 13.3.2 London, SE1 3ER GB **T** +44 (0) 2031 765370 info@lumenpulse.com **www.lumenpulsegroup.com**

Lumenpulse Group Inc. reserves the right to make changes to this product at any time without prior notice and such modification shall be effective immediately
2017.11.28 copyright © 2017 Lumenpulse Group Inc.
MG - R14

Specification Sheet

lumenbeam

Grande

WHITE AND STATIC COLOURS

DALI dimming (DALI)

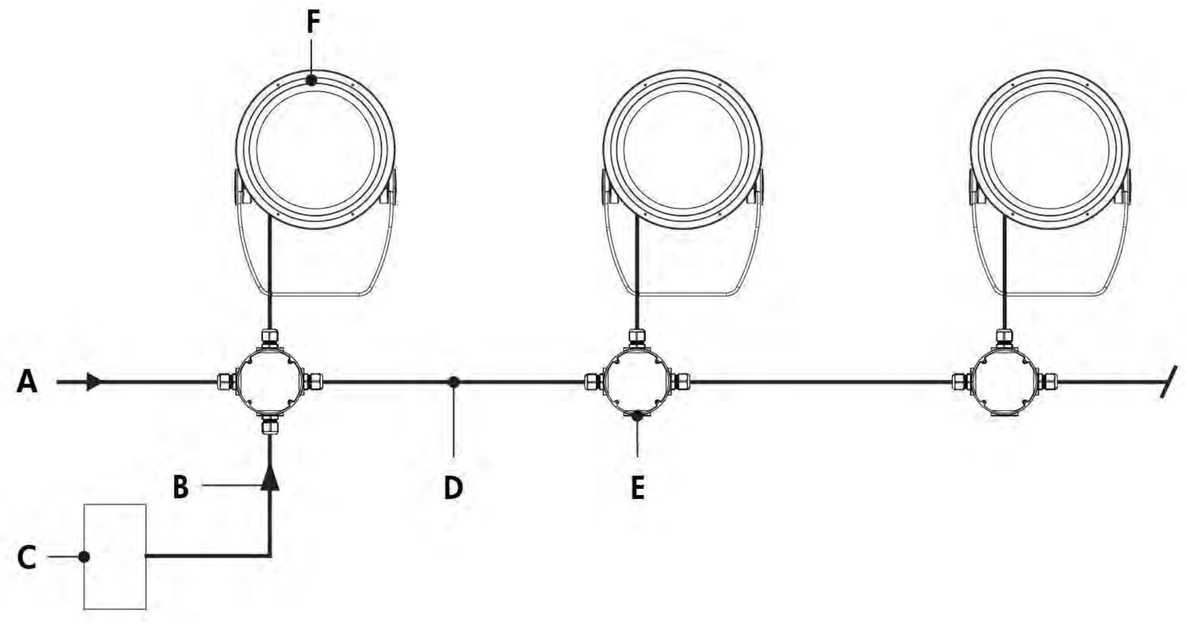

A - Power input (100-277V)
B - Data wiring (by others)
C - Third party DALI controller
D - Power and data wiring (by others)
E - Junction box (by others)
F - Lumenbeam Grande

DALI dimming (DALI) - wiring detail - CE

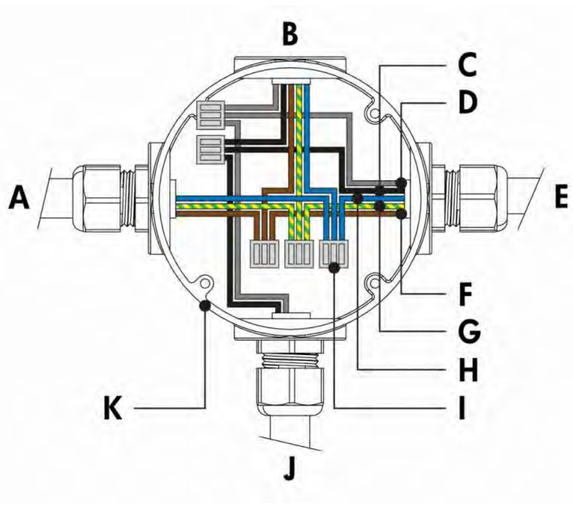

A - Power input or from previous fixture
B - To fixture
C - Data +
D - Data -
E - To next fixture
F - Live
G - Ground
H - Neutral
I - Terminal connector (by others)
J - From third party DALI controller
K - Junction box (by others)

DALI dimming (DALI) - wiring detail - CE Class II option

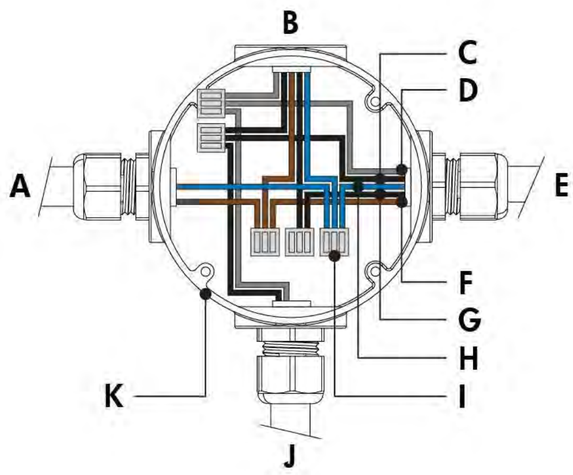

A - Power input or from previous fixture
B - To fixture
C - Data +
D - Data -
E - To next fixture
F - Live
G - Signal common
H - Neutral
I - Terminal connector (by others)
J - From third party DALI controller
K - Junction box (by others)

- Consult factory for specific applications and maximum fixture count/cable length recommendations.
- Maximum of 64 DALI fixtures per DALI loop.
- 1% minimum dimming value.
- 100 watts per fixture.

lumenpulse™ 11/13 Weston Street, Unit no 13.3.2 London, SE1 3ER GB **T** +44 (0) 2031 765370 info@lumenpulse.com **www.lumenpulsegroup.com**

Lumenpulse Group Inc. reserves the right to make changes to this product at any time without prior notice and such modification shall be effective immediately
2017.11.28 copyright © 2017 Lumenpulse Group Inc.
MG - R14

Specification Sheet

lumenbeam

Grande

WHITE AND STATIC COLOURS

Lutron® EcoSystem® Enabled dimming (ES)

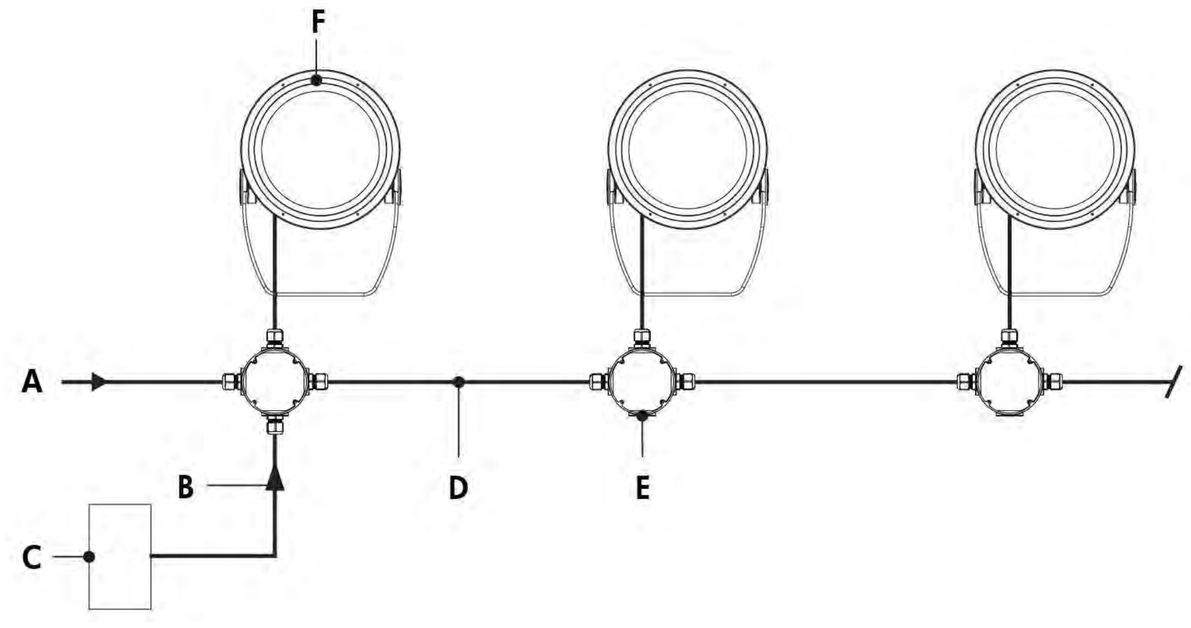

A - Power input (100-277V)
B - Data wiring (by others)
C - Lutron® EcoSystem® controller
D - Power and data wiring (by others)
E - Junction box (by others)
F - Lumenbeam Grande

Lutron® EcoSystem® Enabled dimming (ES) - wiring detail

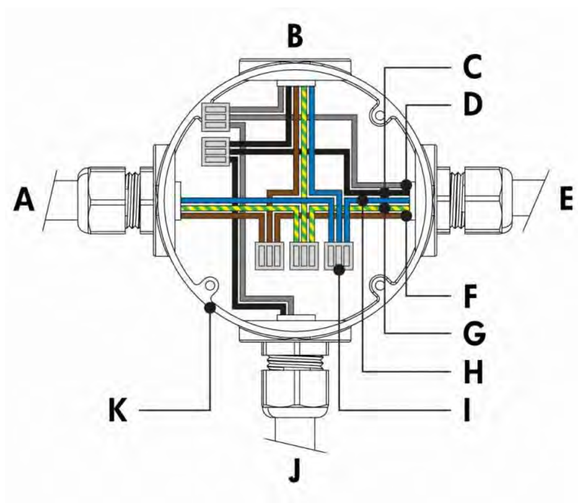

A - Power input or from previous fixture
B - To fixture
C - Data +
D - Data -
E - To next fixture
F - Live
G - Ground
H - Neutral
I - Terminal connector (by others)
J - From Lutron® EcoSystem® controller
K - Junction box (by others)

- Consult factory for specific applications and maximum fixture count/cable length recommendations.
- Each Lutron® EcoSystem® enabled fixture has its own address; for the example shown, there are a total of 3 EcoSystem® addresses.
- 1% minimum dimming value.
- 100 watts per fixture.

lumenpulse™ 11/13 Weston Street, Unit no 13.3.2 London, SE1 3ER GB **T** +44 (0) 2031 765370 info@lumenpulse.com **www.lumenpulsegroup.com**

Lumenpulse Group Inc. reserves the right to make changes to this product at any time without prior notice and such modification shall be effective immediately
2017.11.28 copyright © 2017 Lumenpulse Group Inc.
MG - R14

Specification Sheet

lumenbeam

Grande

WHITE AND STATIC COLOURS

Star Layout (DMX/RDM)

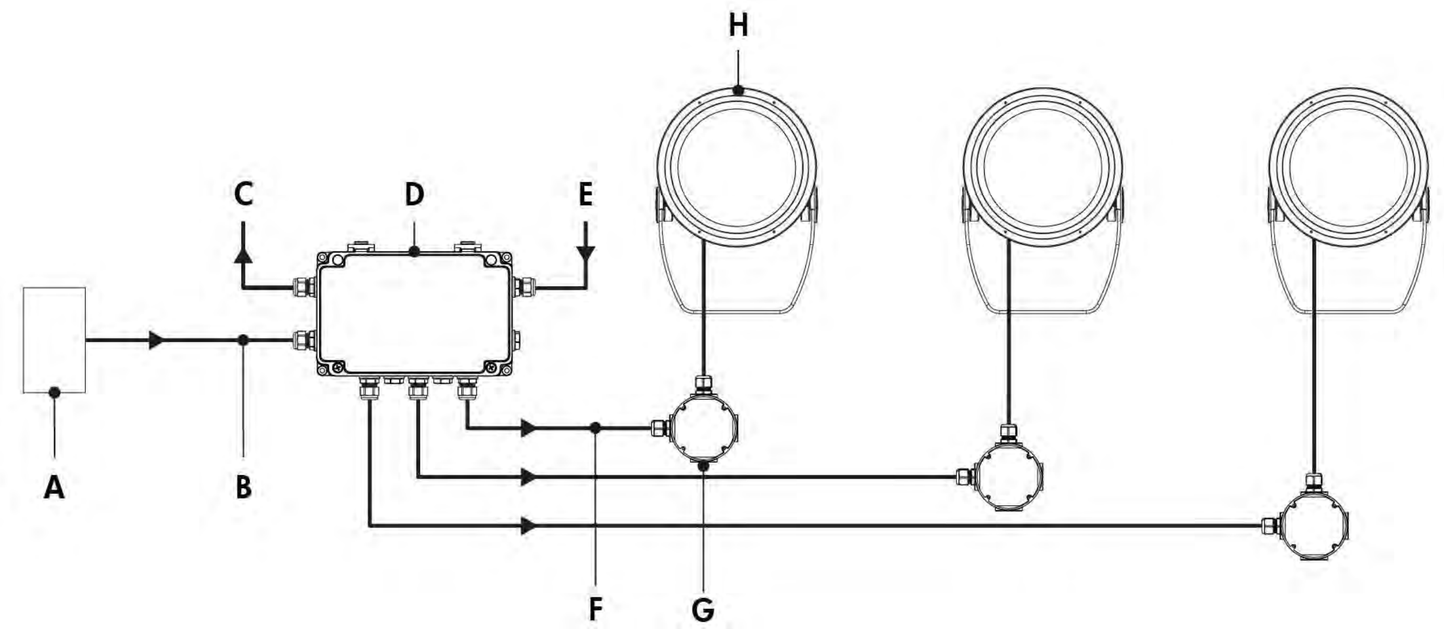

A - Third party DMX/RDM controller
B - Data input (Belden 9841 or equivalent, by others)
C - Data output to next CBX (optional, not isolated/not boosted)
D - CBX-ST
E - Power input (100-277V)
F - Power and data output to fixture (wiring by others)
G - Junction box (by others)
H - Lumenbeam Grande

Star Layout (DMX/RDM) - wiring detail - CE

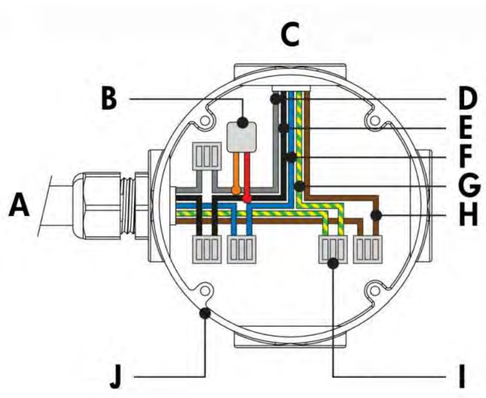

A - From CBX or previous fixture
B - Lumenterminator*
C - To fixture
D - Data -
E - Data +
F - Neutral
G - Ground
H - Live
I - Terminal connector (by others)
J - Junction box (by others)

Star Layout (DMX/RDM) - wiring detail - CE Class II option

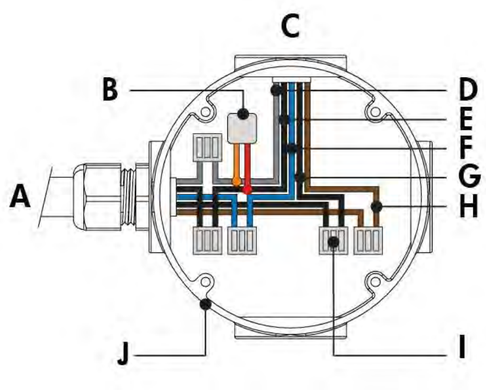

A - From CBX or previous fixture
B - Lumenterminator*
C - To fixture
D - Data -
E - Data +
F - Neutral
G - Signal common
H - Live
I - Terminal connector (by others)
J - Junction box (by others)

Maximum number of fixtures per run (Based on16A maximum, 1,5mm² cable, fixtures spaced 10ft on center, first fixture 50ft from CBX)				
Configuration/Voltage	**120V**	**208V**	**240V**	**277V**
LBG	10	16	18	21

- Consult factory for specific applications and maximum fixture count/cable length recommendations.
- Run length calculations are based on a voltage drop of no more than 25V.
- The DMX/RDM protocol states a maximum of 32 DMX/RDM enabled fixtures on any single run.
- Maximum of 4 DMX/RDM repeaters/CBX cascading in line.
- Maximum of 6 outputs per CBX-ST.
- Each fixture requires 1 DMX address.
- 1% minimum dimming value.
- 100 watts per fixture.

*DMX terminator is required at the end of each run to maintain data integrity. (6x) DMX lumenterminators included per CBX-ST. See installation instructions for details.

lumenpulse™

11/13 Weston Street, Unit no 13.3.2 London, SE1 3ER GB **T** +44 (0) 2031 765370 info@lumenpulse.com **www.lumenpulsegroup.com**

Lumenpulse Group Inc. reserves the right to make changes to this product at any time without prior notice and such modification shall be effective immediately
2017.11.28 copyright © 2017 Lumenpulse Group Inc.
MG - R14

Specification Sheet

lumenbeam

Grande

WHITE AND STATIC COLOURS

Daisy Chain Layout (DMX/RDM)

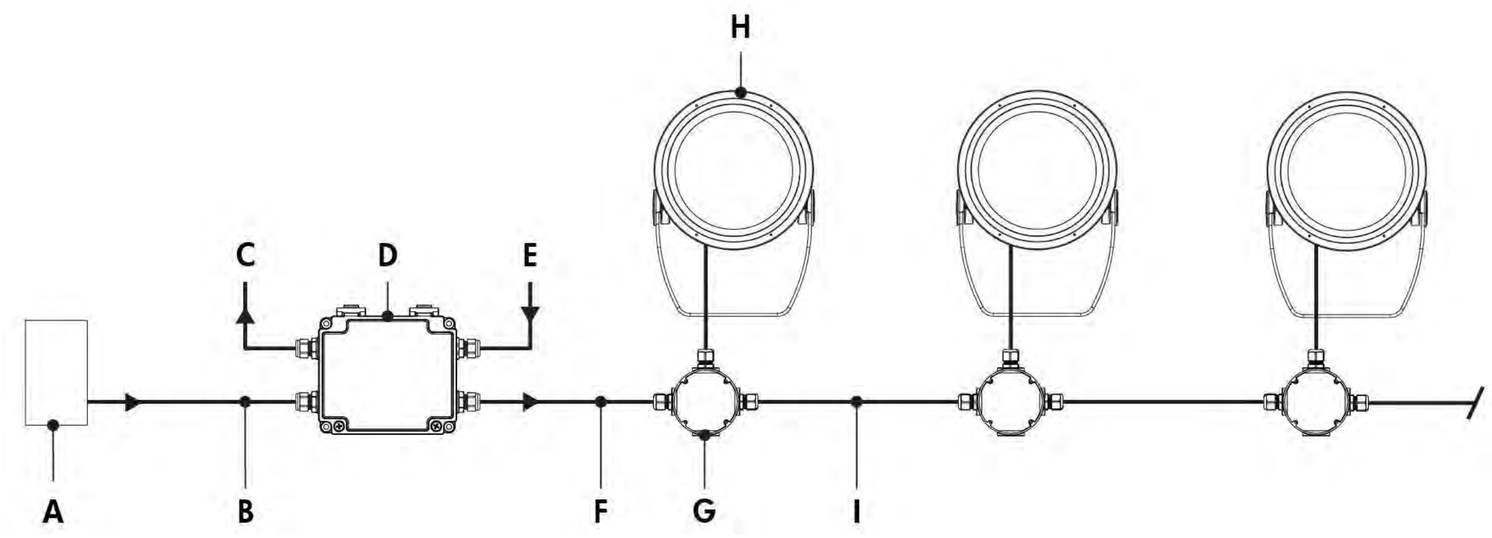

A - Third party DMX/RDM controller
B - Data input (Belden 9841 or equivalent, by others)
C - Data output to next CBX (optional, not isolated/not boosted)
D - CBX-DS
E - Power input (100-277V)
F - Power and data output to fixture (wiring by others)
G - Junction box (by others)
H - Lumenbeam Grande
I - Power and data wiring (by others)

Daisy Chain Layout (DMX/RDM) - wiring detail (first or middle of run) - CE

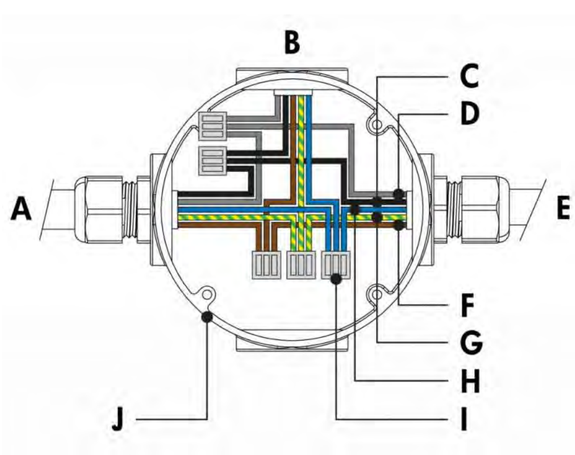

A - From CBX or previous fixture
B - To fixture
C - Data +
D - Data -
E - To next/from previous fixture
F - Live
G - Ground
H - Neutral
I - Terminal connector (by others)
J - Junction box (by others)

Daisy Chain Layout (DMX/RDM) - wiring detail (end of run) - CE

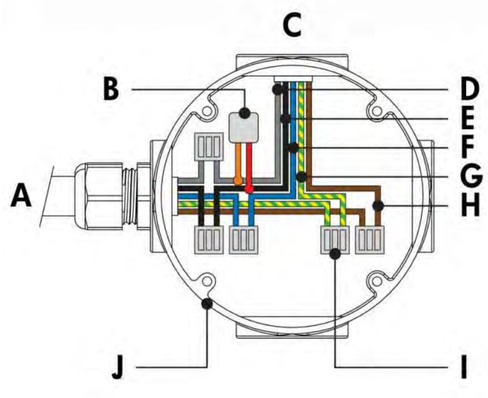

A - From CBX or previous fixture
B - Lumenterminator*
C - To fixture
D - Data -
E - Data +
F - Neutral
G - Ground
H - Live
I - Terminal connector (by others)
J - Junction box (by others)

Daisy Chain Layout (DMX/RDM) - wiring detail (first or middle of run) - CE Class II option

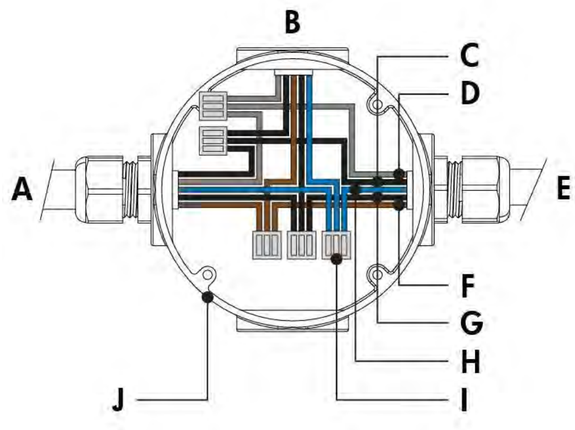

A - From CBX or previous fixture
B - To fixture
C - Data +
D - Data -
E - To next/from previous fixture
F - Live
G - Signal common
H - Neutral
I - Terminal connector (by others)
J - Junction box (by others)

Lumenpulse Group Inc. reserves the right to make changes to this product at any time without prior notice and such modification shall be effective immediately
2017.11.28 copyright © 2017 Lumenpulse Group Inc.
MG - R14

Specification Sheet

lumenbeam

Grande

WHITE AND STATIC COLOURS

Daisy Chain Layout (DMX/RDM) - wiring detail (end of run) - CE Class II option

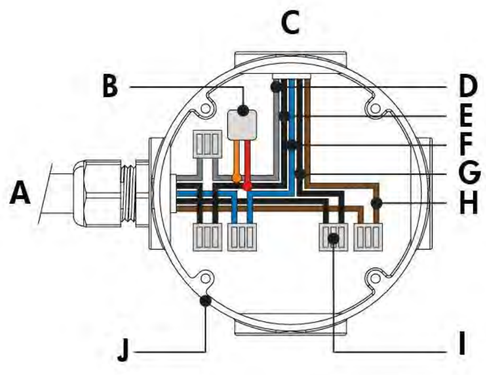

A - From CBX or previous fixture
B - Lumenterminator*
C - To fixture
D - Data -
E - Data +
F - Neutral
G - Signal common
H - Live
I - Terminal connector (by others)
J - Junction box (by others)

Maximum number of fixtures per run (Based on16A maximum, 1,5mm² cable, fixtures spaced 10ft on center, first fixture 50ft from CBX)				
Configuration/Voltage	**120V**	**208V**	**240V**	**277V**
LBG	10	16	18	21

- Consult factory for specific applications and maximum fixture count/cable length recommendations.
- Run length calculations are based on a voltage drop of no more than 25V.
- The DMX/RDM protocol states a maximum of 32 DMX/RDM enabled fixtures on any single run.
- Maximum of 4 DMX/RDM repeaters/CBX cascading in line.
- Maximum of 1 output per CBX-DS.
- Maximum of 3 ft cable length between fixture and next junction box for daisy chain layout.
- Each fixture requires 1 DMX address.
- 1% minimum dimming value.
- 100 watts per fixture.

* DMX terminator is required at the end of each run to maintain data integrity. (2x) DMX lumenterminators included per CBX-DS. See installation instructions for details.

Lumenpulse Group Inc. reserves the right to make changes to this product at any time without prior notice and such modification shall be effective immediately
2017.11.28 copyright © 2017 Lumenpulse Group Inc.
MG - R14

Specification Sheet

lumenbeam

Grande

WHITE AND STATIC COLOURS

Accessories (order separately)

Control Boxes

CBX-DS-Power and control box - daisy chain configuration

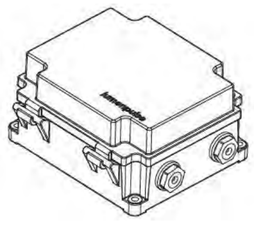

DMX/RDM control box. One power and data output to fixture or fixture run. Ethernet enabled option. Refer to CBX specification sheet for details.

CBX-ST-Power and control box - star configuration

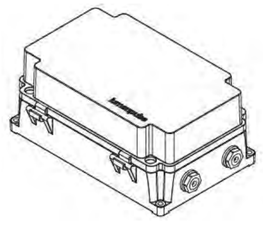

DMX/RDM control box. Up to six power and data outputs to fixtures or fixture runs. Ethernet enabled option. Refer to CBX specification sheet for details.

Control Systems

LTO2-Lumentouch 2.0™



Lumentouch is a wall mount DMX 512 controller keypad.

LCU-Lumencue



Lumencue is a USB / mini SD DMX 512 controller.

Diagnostic and Addressing Tools

LID-LumenID

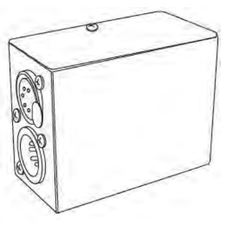

LumenID is a diagnostic and addressing DMX/RDM tool. It must be specified on all DMX applications. Refer to LID specification sheet for details.

LID-LT-LumentalkID

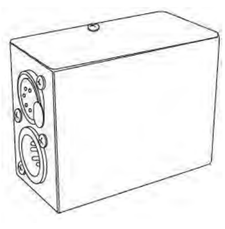

LumentalkID is a diagnostic and addressing tool. It must be specified for all Lumentalk (LT) applications. Refer to LID-LT specification sheet for details.

Lumenpulse Group Inc. reserves the right to make changes to this product at any time without prior notice and such modification shall be effective immediately
2017.11.28 copyright © 2017 Lumenpulse Group Inc.
MG - R14

Specification Sheet

lumenbeam

Grande

WHITE AND STATIC COLOURS

How to order

1	2	3	4	5	6	7	8
LBG							

9	10	11

1 . Housing

LBG	Lumenbeam™ Grande

2 . Voltage

100	100 volts
120	120 volts
208	208 volts
220	220 volts
240	240 volts
277	277 volts

3 . Colour and Colour Temperature (1)

22K	2200K
27K	2700K
30K	3000K
35K	3500K
40K	4000K
57K	5700K
RD	Red
GR	Green
BL	Blue

4 . Optic1

XN	Extra Narrow 4°
VN	Very Narrow 6°
NS	Narrow Spot 10°
NF	Narrow Flood 20°
FL	Flood 40°
WFL	Wide Flood 60° (2)

5 . Optic2

XN	Extra Narrow 4°
VN	Very Narrow 6°
NS	Narrow Spot 10°
NF	Narrow Flood 20°
FL	Flood 40°
WFL	Wide Flood 60° (2)

6 . Optical Option

LSLH	Linear spread lens horizontal distribution (3)
LSLV	Linear spread lens vertical distribution (3)

7 . Finish

BK	Black Sandtex®
BRZ	Bronze Sandtex®
SI	Silver Sandtex®
WH	Smooth white
BKTX	Textured black
BRZTX	Textured bronze non-metallic
GRATX	Textured medium grey
GRNTX	Textured green
WHTX	Textured white
CC	Custom colour and finish (please specify RAL colour) (4)

lumenpulse™ 11/13 Weston Street, Unit no 13.3.2 London, SE1 3ER GB **T** +44 (0) 2031 765370 info@lumenpulse.com **www.lumenpulsegroup.com**

Lumenpulse Group Inc. reserves the right to make changes to this product at any time without prior notice and such modification shall be effective immediately
2017.11.28 copyright © 2017 Lumenpulse Group Inc.
MG - R14

Specification Sheet

lumenbeam

Grande

WHITE AND STATIC COLOURS

8 . Control

NO	On/Off control
LT	Lumentalk [5] [6]
DIM	1-10V dimming
DALI	DALI dimming
ES	Lutron® EcoSystem® Enabled dimming [6]
DMX/RDM	DMX/RDM enabled

11 . Cable Length [8]

1M	3.3 ft [8] [9]
5M	16.4 ft
10M	32.8 ft
15M	49.2 ft
20M	65.6 ft
30M	98.4 ft

9 . Options

SY	Short Yoke
3GV	3G ANSI C136.31 Vibration Rating for bridge applications
CRC	Corrosion-resistant coating for hostile environments [7]

10 . Certification

UL	UL compliant
CE	CE compliant
CEII	CE compliant Class II double insulated

Notes:

[1] Consult factory for availability of static Royal Blue, 6500K and 90+ CRI.

[2] Cannot be combined with other optics.

[3] Factory installed, not available for 60° optic. Field adjustable spread lens optical accessory available, order separately.

[4] Lumenpulse offers a wide selection of RAL CLASSIC (K7) colours with a smooth texture and high-gloss finish. Please consult factory for a list of available K7 colours, other RAL textures and glosses, or to match alternate colour charts. Final colour matching results may vary.

[5] A Lumentranslator and LumentalkID (LIDLT) must be specified for Lumentalk applications. Consult Lumentranslator and Lumentalk pages and specification sheets for details.

[6] Not available with Class II double insulated option.

[7] Use only when exposed to salt spray and harsh chemicals. This option is not required for normal outdoor exposure.

[8] 1 m cable length is standard unless otherwise specified.

[9] Maximum of 3.3 ft cable length for daisy chain DMX applications with CBX-DS.

lumenpulse™ 11/13 Weston Street, Unit no 13.3.2 London, SE1 3ER GB **T** +44 (0) 2031 765370 info@lumenpulse.com **www.lumenpulsegroup.com**

Lumenpulse Group Inc. reserves the right to make changes to this product at any time without prior notice and such modification shall be effective immediately
2017.11.28 copyright © 2017 Lumenpulse Group Inc.
MG - R14

valmont STRUCTURES

8' Round Non-Tapered Alu
4-Bolt Anchor Base Pole

YS4

Lam Partners ARCHITECTURAL LIGHTING DESIGN

Job Name:	Client Name:
Job Location - City: State:	Created By: Date:
Product: Quote:	Customer Approval: Date:

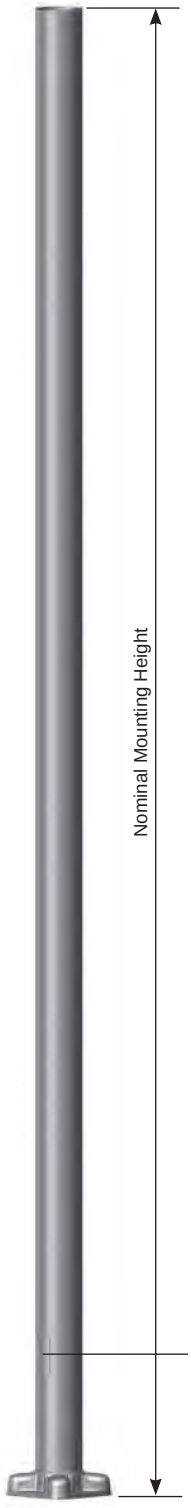

Tenon Top



Pole Cap



Cross Section



Handhole



Nut Covers (Standard)



Dart Square - 2T (Optional)



SPECIFICATIONS

Pole - The pole shaft is extruded from seamless 6000 series alloy aluminum.

Pole Top - A pole top tenon is provided for top mount luminaire and/or bracket. A removable pole cap is available for poles receiving drilling patterns for side-mount luminaire arm assemblies.

Handhole - A covered handhole with hardware and grounding provision are provided.

Base Cover - Optional Dart Square-2T cast and decorative base covers available as special order.

Anchor Base - The anchor base is cast from 356 alloy aluminum. The completed assembly is heat-treated to a T6 temper. Aluminum nut covers are included with anchor base unless otherwise specified.

Anchor Bolts - Anchor bolts conform to ASTM F1554 Grade 55 and are provided with two hex nuts and two flat washers. Bolts have an “L” bend on one end and are galvanized a minimum of 12" on the threaded end.

Finish - The standard finish for the pole assembly and components is satin brushed, natural anodize, duranodic or polyester powder applied coating in accordance with Valmont’s Specifications. Additional finish options available upon request.

8' to 14'
Round Non-Tapered Aluminum
4-Bolt Anchor Base Pole

valmont STRUCTURES

YS4

Lam Partners ARCHITECTURAL LIGHTING DESIGN

Job Name:	Client Name:
Job Location - City: State:	Created By: Date:
Product: Quote:	Customer Approval: Date:

ANCHORAGE DATA

POLE		BASE PLATE				ANCHOR BOLTS		
BASE OD (IN)	WALL THK (IN)	BOLT CIRCLE DIA (IN)	BOLT CIRCLE ± (IN)	SQUARE (IN)	THK (IN)	DIA x LENGTH x HOOK (IN)	PROJECTION (IN)	± (IN)
4.00	0.125	7.50	0.75	8.91	0.630	0.75 x 17.00 x 3.00	3.25	N/A
4.50	0.125	7.84	0.78	9.26	0.630	0.75 x 17.00 x 3.00	3.25	N/A
4.50	0.188	7.84	0.78	9.26	0.630	0.75 x 17.00 x 3.00	3.25	N/A
5.00	0.125	8.63	0.88	9.61	0.630	0.75 x 17.00 x 3.00	3.25	N/A
5.00	0.156	8.63	0.88	9.61	0.630	0.75 x 17.00 x 3.00	3.25	N/A
5.00	0.188	8.63	0.88	9.61	0.630	0.75 x 17.00 x 3.00	3.25	N/A

Anchor Base Detail

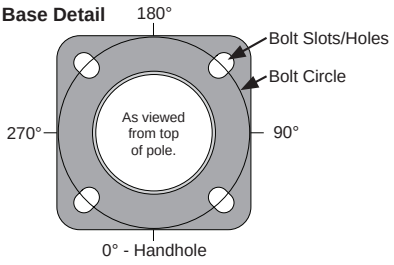

LOAD AND DIMENSIONAL DATA

DESIGN INFORMATION											POLE DIMENSIONS					
	70 MPH w/1.3 GUST		80 MPH w/1.3 GUST		90 MPH w/1.3 GUST		100 MPH w/1.3 GUST		110 MPH w/1.3 GUST[1]							
NOMINAL MOUNTING HEIGHT	MAX EPA[2] (SQ FT)	MAX WEIGHT (LBS)	MAX EPA[2] (SQ FT)	MAX WEIGHT (LBS)	MAX EPA[2] (SQ FT)	MAX WEIGHT (LBS)	MAX EPA[2] (SQ FT)	MAX WEIGHT (LBS)	MAX EPA[2] (SQ FT)	MAX WEIGHT (LBS)	POLE HEIGHT	BASE OD (IN)	TOP OD (IN)	WALL THK (IN)	STRUTURE WEIGHT[3] (LBS)	MODEL NUMBER
8'-0"	10.7	75	7.9	75	6.0	75	4.7	75	3.9	75	8'-0"	4.00	4.00	0.125	19	080040404S4
	14.9	75	11.2	75	8.6	75	6.9	75	5.7	75	8'-0"	4.50	4.50	0.125	21	080045454S4
	22.0	75	16.6	75	12.9	75	10.4	75	8.5	75	8'-0"	4.50	4.50	0.188	29	080045456S4
10'-0"	8.1	75	5.9	75	4.3	75	3.3	75	2.7	75	10'-0"	4.00	4.00	0.125	22	100040404S4
	11.5	100	8.4	100	6.4	100	5.1	100	4.1	100	10'-0"	4.50	4.50	0.125	25	100045454S4
	17.3	100	12.8	100	9.9	100	7.9	100	6.5	100	10'-0"	4.50	4.50	0.188	35	100045456S4
	15.4	100	11.5	100	8.9	100	7.1	100	5.8	100	10'-0"	5.00	5.00	0.125	27	100050504S4
12'-0"	6.2	75	4.3	75	3.0	75	2.2	75	1.7	75	12'-0"	4.00	4.00	0.125	26	120040404S4
	9.0	75	6.5	75	4.8	75	3.8	75	3.0	75	12'-0"	4.50	4.50	0.125	29	120045454S4
	13.9	75	10.2	75	7.7	75	6.2	75	5.0	75	12'-0"	4.50	4.50	0.188	41	120045456S4
	12.2	100	9.0	100	6.9	100	5.5	100	4.4	100	12'-0"	5.00	5.00	0.125	32	120050504S4
	15.5	100	11.5	100	8.9	100	7.1	100	5.8	100	12'-0"	5.00	5.00	0.156	38	120050505S4
	18.8	100	14.0	100	10.9	100	8.7	100	7.1	100	12'-0"	5.00	5.00	0.188	45	120050506S4
14'-0"	4.6	100	3.0	100	1.9	100	1.2	100	0.9	100	14'-0"	4.00	4.00	0.125	30	140040404S4
	6.9	100	4.7	100	3.4	100	2.6	100	2.0	100	14'-0"	4.50	4.50	0.125	33	140045454S4
	11.1	100	7.9	100	5.9	100	4.6	100	3.7	100	14'-0"	4.50	4.50	0.188	47	140045456S4
	9.7	100	6.9	100	5.3	100	4.1	100	3.3	100	14'-0"	5.00	5.00	0.125	36	140050504S4
	12.5	100	9.1	100	7.0	100	5.5	100	4.4	100	14'-0"	5.00	5.00	0.156	44	140050505S4
	15.3	100	11.2	100	8.7	100	6.9	100	5.6	100	14'-0"	5.00	5.00	0.188	52	140050506S4

1. EPA values are calculated using fastest mile winds.
2. EPA represents the Effective Projected Area of each luminaire. Designs are limited to top mount or side-mount luminaires. Variations from sizes above are available upon inquiry at the factory. Satisfactory performance of poles is dependent upon the pole being properly attached to a supporting foundation of adequate design.
3. Structure weight is a nominal value which includes the pole shaft and base plate.

PRODUCT ORDERING CODES

CROSS SECTION	MODEL NUMBER	FIXTURE MOUNTING	COLOR		OPTIONS
R		--		_	
R = Round	080040404S4 080045454S4 080045456S4 100040404S4 100045454S4 100045456S4 100050504S4 120040404S4 120045454S4 120045456S4 120050504S4 120050505S4 120050506S4 140040404S4 140045454S4 140045456S4 140050504S4 140050505S4 140050506S4	**Drill Mounting** D1 = 1 Luminaire D2 = 2 @ 180° D3 = 3 @ 120° D4 = 4 @ 90° D5 = 2 @ 90° D6 = 3 @ 90° **Tenon Mounting** P2 = 2.38" OD x 4.00" P3 = 3.50" OD x 6.00" P4 = 4.00" OD x 6.00" P5 = 2.88" OD x 4.00" P7 = 2.38" OD x 5.00" PQ = 2.38" OD x 12.00" PD = 3.00" OD x 3.00" -- = Plain Top P9 = Other Tenon (Contact Factory)	**Polyester Powder** DWH = White DSS = Sandstone HTG = Hunter Green DNA = Natural Aluminum DCG = Charcoal Gray DMB = Medium Bronze DNB = New Dark Bronze DDB = Dark Bronze DBL = Black DSB = Steel Blue DTG = Dark Green DBR = Red SC = Special Color (Contact Factory)	**Anodized** 204 = Clear Natural 311 = Light Bronze* 312 = Medium Bronze* 313 = Dark Bronze* 335 = Black* *Duranodic Anodize **Brushed** SBF = Satin Brushed	See Accessories at valmontstructures.com (Please Specify with Code)

SPC7074 09/17 valmontstructures.com carries the most current spec information and supersedes these guidelines.

GEN LED acolyte® Architectural Lighting Solutions

Date | Project

Notes

YS5

Lam Partners ARCHITECTURAL LIGHTING DESIGN

STATIC WHITE SERIES 2 RIBBONLYTE 2.2

GENLED Acolyte®'s Series 2 RibbonLyte product line provides a 40% or more increase of lumens per watt, lumens per foot, and LEDs per foot. Also, RibbonLyte now has tighter LED spacing and shorter cuttable lengths.

- 2.2 W/ft (7.2 W/m)
- Create a custom fixture with our channels
- 6 white color temperatures
- 90+ CRI
- 2-Step MacAdam's ellipse binning





Applications:

Commercial
Entertainment
Healthcare

Hospitality
Museums
Public Spaces

Residential
Retail

ETL US | CE | RoHS | IP20 | IP65 | IP68

ORDERING GUIDE

Category	CRI	Ribbon Type & IP Rating	Wattage & Color	
RB	**90**			
RB - RIBBONLYTE	**90** - 90+ CRI Static White	**SWS220** - Static White Series 2 IP20	**2.224** - 2.2 W/ft 2400K	**2.235** - 2.2 W/ft 3500K
		SWS265 - Static White Series 2 IP65	**2.227** - 2.2 W/ft 2700K	**2.240** - 2.2 W/ft 4000K
		SWS268 - Static White Series 2 IP68	**2.230** - 2.2 W/ft 3000K	**2.260** - 2.2 W/ft 6000K

CONNECTION OPTIONS

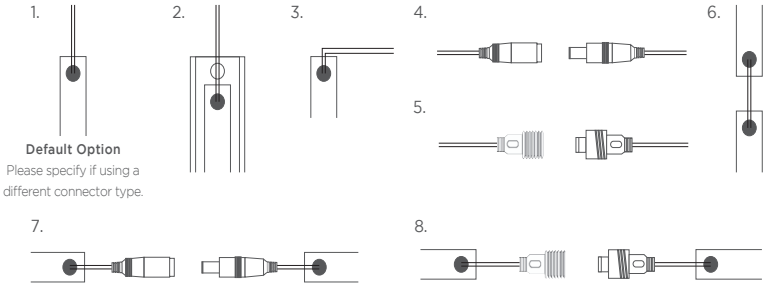

Default Option
Please specify if using a different connector type.

1 - End Feed Hard Wire Connection
2 - Back Feed Hard Wire Through Channel
3 - Side Feed Hard Wire Connection
4 - IP20 Connector Input
5 - IP67 Connector Input
6 - Soldered Daisy-Chain
7 - Daisy Chain with IP20 Connectors
8 - Daisy Chain with IP67 Connectors

AVAILABLE COLOR TEMPERATURES

2400K | 2700K | 3000K | 3500K | 4000K | 6000K

SPECIFICATIONS / DIAGRAM / USAGE GUIDELINES

	STATIC WHITE SERIES 2 RIBBONLYTE 2.2					
Operating Voltage	24 V					
Power Consumption	2.2 W/ft (7.2 W/m)					
Current (mA) - 24V	92 mA/ft (302 mA/m)					
LED Pitch	24 LEDs/ft (80 LEDs/m)					
Protection Rating	IP20, IP65, IP68					
Dimming/Control	ELV / MLV / 0-10 Volt / DMX / Lutron A-Series 1% dimming LED drivers / DALI					
Operating Temperature	-40° F to 158° F (-40° C to 70° C)					
Colors Temperatures	2400K	2700K	3000K	3500K	4000K	6000K
MacAdam's Ellipses (SDCM)	2-Step Binning					
Lumens	242 lm/ft (794 lm/m)	271 lm/ft (888 lm/m)	290 lm/ft (953 lm/m)	297 lm/ft (974 lm/m)	293 lm/ft (960 lm/m)	284 lm/ft (931 lm/m)
Binning Tolerance	+/- 100K					
LED Beam Angle	120°					
Lamp Life	50,000 Hrs					
Cuttable Length	3.94 in (100 mm)					
CRI - All Color Temp.	90+ CRI					
Lumens/Watt	110 lm/W	123 lm/W	132 lm/W	135 lm/W	133 lm/W	129 lm/W
Constant Voltage	✓					
Certifications	CE, ETL, RoHS					
Warranty	IP20: 6 years, IP65/68: 3 years					

24V DIMENSIONS	Top View	Side View	Dimensions
IP20	 CUTTABLE EVERY: 3.94 in (100 mm)		**Width** 0.31 in (8 mm) **Max Length*** 42 ft (12.8 m) **Height** 0.06 in (1.45 mm)
IP65	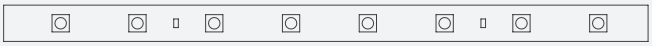 CUTTABLE EVERY: 3.94 in (100 mm)		**Width** 0.31 in (8 mm) **Max Length*** 32.8 ft (10 m) **Height** 0.1 in (2.5 mm)
IP68	 CUTTABLE EVERY: 3.94 in (100 mm)		**Width** 0.44 in (11.18 mm) **Max Length*** 32.8 ft (10 m) **Height** 0.18 in (4.5 mm)

*Max length before additional power is introduced
Maximum run length for IP68 waterproof RibbonLyte is 10 m (32.8 ft). For single runs longer than 10 m, RibbonLyte will be daisy chained.

USAGE GUIDELINES

- **When installing this product take into account the surface temperature of the material this product is mounted to. Many building surfaces which are exposed to direct sunlight exceed the 70° C / 158° F maximum that our product is rated for. High risk locations like this should be avoided.**
- **Our IP65 can be used in wet, outdoor locations around swimming pools and spa tubs, but our products are not intended to be submerged in pools and fountains and do not carry UL676 certification to do so.**
- Please refer to our RibbonLyte Proper Use Guide in our *Application Guide* for more information. Available for download at www.**GEN**LEDBrands.com/Home/Acolyte
- Compatible with a wide variety of control products including the entire line of Lutron dimming systems.
- For use with **GEN**LED Acolyte® drivers, 0-10V dimming modules and interface controllers (DMXINF models).
- Use with non-**GEN**LED Acolyte® supplied Triac, MLV or ELV drivers is not supported or warrantied.
- Due to the nature of the product, RibbonLyte cuttable lengths are generally longer or shorter than the customer requested length. Unless specified, RibbonLyte is factory cut at the shorter cuttable point.
- We reserve the right to make changes to product lineup, specifications, design and finishes at any time without notice.

GENLED Acolyte® does not warrant or represent that the information is free from errors or omission. The information may change without notice and **GEN**LED Acolyte® is not in any way liable for the accuracy of any information printed and stored or in any way interpreted or used.

CHANNEL COMPATIBILITY / CHANNEL OPTIONS

	IP20/IP65	IP68
AC1	✓	✓
AC2	✓	✓
AC3	✓	✓
AC4	✓	✓
AC5	✓	✓
AP1	✓	✓
AR1	✓	
AR2	✓	✓
AR3	✓	✓
AS1	✓	
AS2	✓	✓
AS3	✓	✓
AS6	✓	✓
AS20G	✓	
AT4	✓	✓
AT5	✓	✓
AT11	✓	✓
AW35	✓	✓
B1	✓	
C22	✓	✓
GL1	✓	✓
GL2	✓	✓
ROUND	✓	✓
W31	✓	✓
WH35	✓	✓

SURFACE MOUNTED CHANNELS

LENS OPTIONS: **C** - Clear **F** - Frosted **M** - Milky **G** - Grazer



AC1
C, F, M



AC2
C, F, M



AC3
C, F, M



AC4
C, F, M



AC5
C, F, M



AP1
C, F, M



AS1
C, F, M



AS2
C, F, M



AS3
C, F, M



AS6
C, F, M



AS20G
G



AT4
C, F, M



AT5
C, F, M



AT11
C, F, M



AW35
C, F, M



B1
C, F, M



C22
C, F, M



GL2
C, F, M



ROUND
C, F, M



WH35
C, F, M

RECESSED CHANNELS

LENS OPTIONS: **C** - Clear **F** - Frosted **M** - Milky



AR1
C, F, M



AR2
C, F, M



AR3
C, F, M



W31
C, F, M



GL1
C, F, M

DISCLAIMER

When installing this product take into account the surface temperature of the material this product is mounted to. Many building surfaces which are exposed to direct sunlight exceed the 70°C/158°F maximum that our product is rated for. High risk locations like this should be avoided.

Our IP68 product is not intended to be submerged in pools and fountains and does not carry UL676 certification to do so.

WIRING DIAGRAMS

0-10V

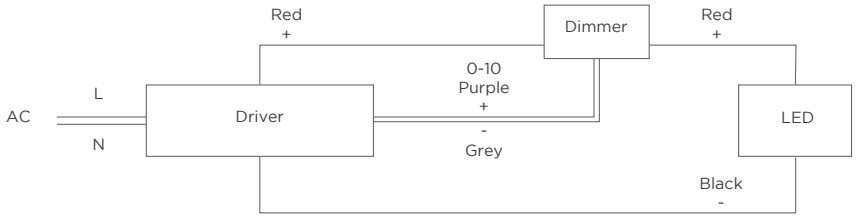

MAGNETIC + ELV

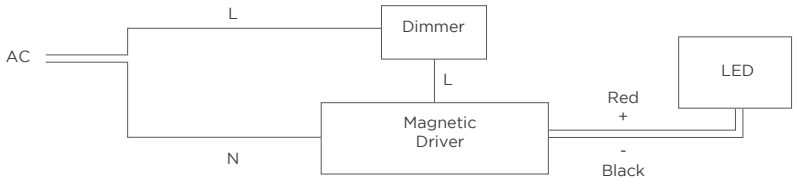

DMX

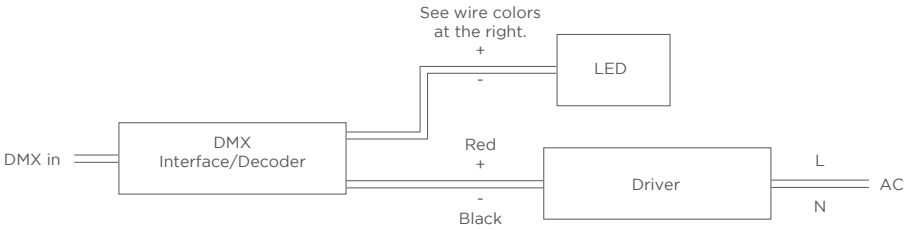

WIRE COLORS PER RIBBONLYTE COLOR

STATIC WHITE SERIES 2

Red Wire (+) Positive

Black Wire (-) Negative

GEN LED acolyte® Architectural Lighting Solutions

Date | Project | YS5 | Lam Partners ARCHITECTURAL LIGHTING DESIGN

Notes

0-10V DIMMABLE 96W WATERPROOF DRIVER



This Constant Voltage Class 2 LED Driver is UL Listed. The UL Listed type enclosure has a built-in junction box on both the input and output. This driver is IP65 rated and is suitable for both indoor and outdoor installations. With universal input voltage ranging from 120 to 277VAC, DRVW2496-10 driver is designed for commercial, industrial and residential applications. The 0-10V dimming on DRVW2496-10 delivers smooth, flicker-free linear dimming down to 1% with most LED's and a wide variety of compatible dimmers.

- UL Listed Enclosure - With Built-In Junction Boxes
- Universal Input Voltage
- 0-10V Dimmable - Flicker Free Down to 1%
- IP65 - For Both Indoor and Outdoor Use, UL 8750 Approved
- Class 2, Class P
- Auto-Reset Protection for Short Circuit and Over-Temperature
- Over Load Protection - CC Mode
- 5-year warranty

Applications:

Commercial
Entertainment
Healthcare
Hospitality
Museums
Public Spaces
Residential
Retail

UL IP65

SPECIFICATIONS / COMPATIBLE 0-10 DIMMER LIST

DRVW2496-10			
Compatible Dimming	0-10V	**DIMMING**	PART NUMBER
Output Voltage (DC)	24 V	**LUTRON**	Diva-DVTV
Max Output Current	4 A	**LUTRON**	Nova T - NFTV
Input Voltage Range (VAC)	120 - 277VAC	**LUTRON**	Nova T - NTFTV
Input Frequency	50 / 60Hz	**LEVITON**	illumaTech - IP7
Efficiency (Typ.)	87%	**WATT STOPPER**	DCLV1
Max Input Current	0.96 A	**LIGHTOLIER CONTROLS**	ZP600FAM120
Expected Life Time	50,000 Hours (< 65° C)	**PHILLIPS**	Sunrise - SR1200ZTUNV
Operating Temperature	-13° F to 104° F (-25° C to 40° C)		
Safety Standards	UL 8750 Approved, UL Listed Enclosure		
Dimensions	11.4 in (290.5 mm) x 2.36 in (59.9 mm) x 1.4 in (35 mm) (L x W x H)		

ORDERING GUIDE

Category	Voltage	Wattage	Dimming Option
DRVW	**24**	**96**	**-10**
DRVW - Waterproof Driver	**24** - 24 V	**96** - 96W	**-10** - 0-10V

MAXIMUM DISTANCE FROM DRIVER TO LED AT FULL LOAD		
96 + 100 W		
Wire Gauge	**Feet**	**Meters**
24 AWG	5.5	1.68
22 AWG	9	2.74
20 AWG	14	4.27
18 AWG	23	7.01
16 AWG	37	11.28
14 AWG	59	17.99
12 AWG	94	28.66
10 AWG	150	45.73
8 AWG	239	72.87

GENLED Acolyte® does not warrant or represent that the information is free from errors or omission. The information may change without notice and **GEN**LED Acolyte® is not in any way liable for the accuracy of any information printed and stored or in any way interpreted or used.

WIRING DIAGRAM

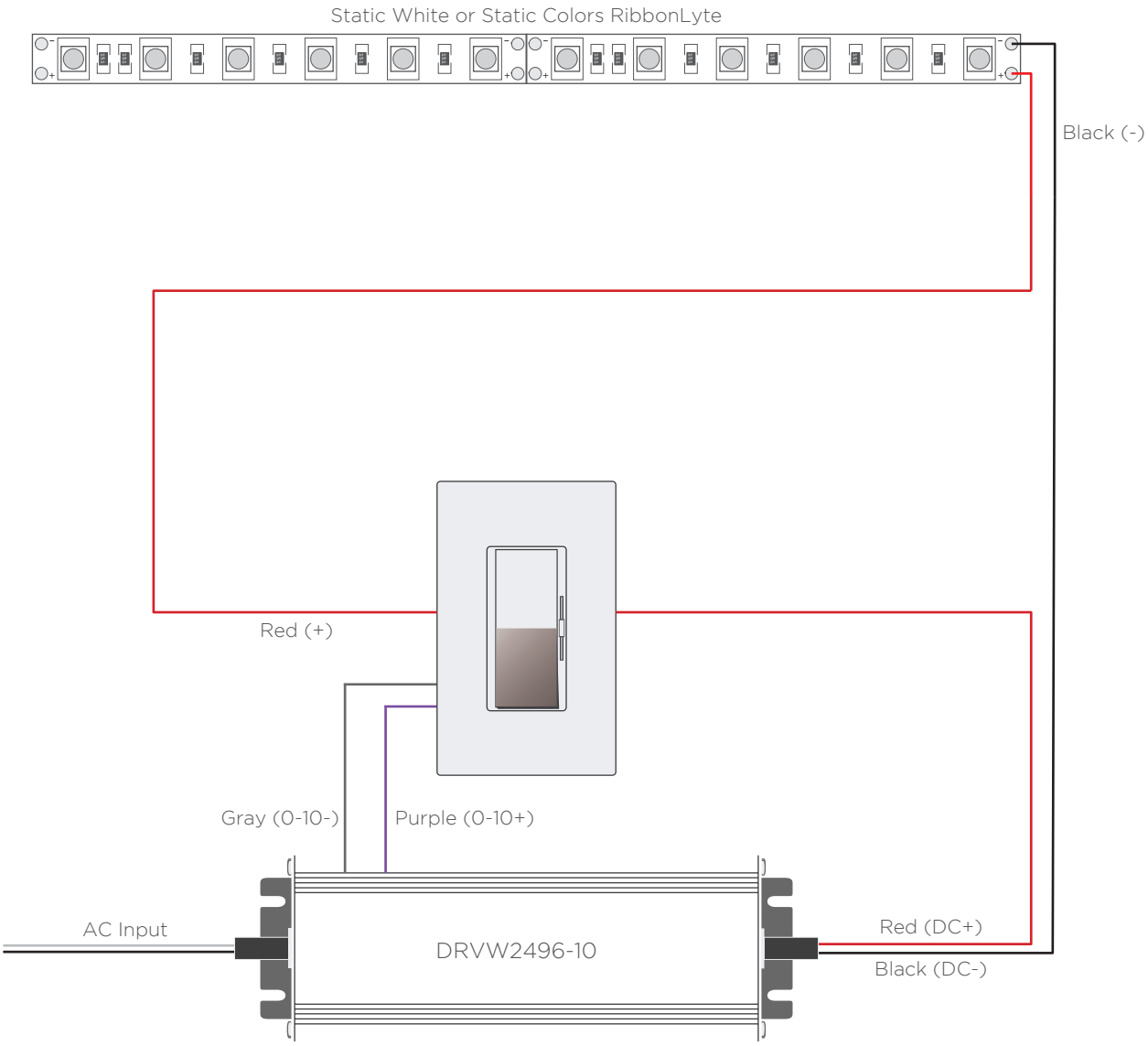

REV.29MAY2019

GEN LED acolyte® Architectural Lighting Solutions

Date | Project

YS5

Lam Partners ARCHITECTURAL LIGHTING DESIGN

Notes

AS2 SERIES 2 CHANNEL FIXTURE

AS2 Series 2 Channel Fixture is a slim channel with a 66-degree narrow beam angle ideal for a controlled spread of light. This channel is ideal for compact cove applications, and can also be used in conjunction with our tiltable stands. The AS2 Series 2 Channel Fixture includes a choice of clear, frosted or milky lens. Custom design a fixture with our AS2 Series 2 Channel and RibbonLyte products.

- Beam Angle 66°
- Wattage Range from 1.5 W/ft (4.9 W/m) to 6.0 W/ft (19.7 W/m)
- Static White delivered lumen range from 116 lm/ft (381 lm/m) up to 729 lm/ft (2391 lm/m)
- Assembled in USA

Applications:

Commercial
Entertainment
Healthcare
Hospitality
Museums
Public Spaces
Residential
Retail





AVAILABLE LENS FINISHES



Clear Lens
92% Light Transmission



Frosted Lens
85% Light Transmission



Milky Lens
70% Light Transmission

ORDERING GUIDE

CATEGORY	LENS	CRI	RIBBON TYPE & IP RATING
CHAS2			
CHAS2- AS2 Channel	**0** - No Lens	**0** - Static Color	**SWS220** - Static White Series 2 IP20
	C -Clear	**90** - 90+ CRI Static White	**SWS265** - Static White Series 2 IP65
	F - Frosted		**SWS268** - Static White Series 2 IP68
	M - Milky		**SCS220** - Static Color Series 2 IP20
			SCS265 - Static Color Series 2 IP65
			SCS268 - Static Color Series 2 IP68

WATTAGE	COLOR		CONNECTION OPTIONS
1.5 - 1.5 W/ft (4.9 W/m - Static White, Static Color)	**24** - 2400K	**R** - Red	**1** - End Feed Hard Wired Connection
2.2 - 2.2 W/ft (7.2 W/m - Static White, Static Color)	**27** - 2700K	**A** - Amber	**2** - Back Feed Hard Wire Connection
3.0 - 3.0 W/ft (9.8 W/m - Static White, Static Color)	**30** - 3000K	**G** - Green	**3** - Side Feed Hard Wire Connection
4.4 - 4.4 W/ft (14.4 W/m - Static White, Static Color)	**35** - 3500K	**B** - Blue	**4** - IP20 Connector Input
5.0 - 5.0 W/ft (16.4 W/m - Static White, Static Color)	**40** - 4000K		**5** - IP67 Connector Input
6.0 - 6.0 W/ft (19.7 W/m - Static White, Static Color)	**60** - 6000K		**6** - Soldered Daisy-Chain
			7 - Daisy-Chain With IP20 Connectors
			8 - Daisy-Chain With IP67 Connectors
			** See last page for connection diagram*

Included Accessories:
1. Mounting Clip

Optional Accessories:
1. Tiltable Stand (Part No.: TILTSTAND)

AVAILABLE COLORS AND COLOR TEMPERATURES

2400K 2700K 3000K 3500K 4000K 6000K Red Amber Green Blue

SPECIFICATIONS

Series 2 AS2 Channel

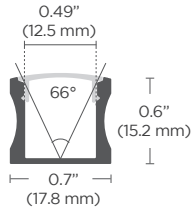

Mounting Clip (Included Accessory)

Side View

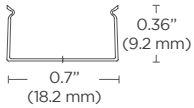

Top View

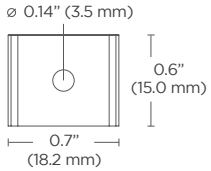

Assembled View

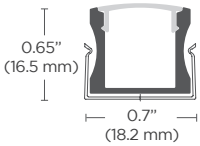

* Each section of channel includes 3 mounting clips.

Tiltable Stand (Optional Accessory)

Side Views

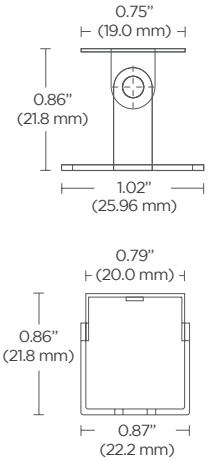

* Height does not include height of mounting clip, channel and lens.
Part Number: TILTSTAND

Assembled View

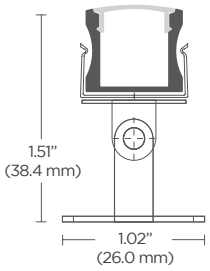

Beam Angle	66°		
Lens Type	Clear, Frosted, Milky		
Width	0.7 in (17.78 mm)	0.7 in (18.2 mm)	Base: 1.02 in (25.96 mm) / Tabletop: 0.75 in (19.0 mm)
Height	0.60 in (15.2 mm)	0.36 in (9.2 mm)	0.86 in (21.8 mm)
Internal	0.49 in (12.45 mm)	--	Screw hole: Size #4-40
Length	Channel is sold by the foot and cut to your exact desired length. Required amount of mounting clips included. Tiltable stands are sold separately		
Operating Voltage	24V		
Dimming	MLV / 0-10 Volt / Lutron A-Series 1% dimming LED drivers / Lutron VIVE code compliance available / ELV / DALI / DMX		
Operating Temperature	-40 F to 158 F (-40 C to 70 C)		
Colors	2400K, 2700K, 3000K, 3500K, 4000K, 6000K, Red, Amber, Green, Blue		
CRI	90+ CRI (Static white only)		
Lamp Life	L70 at 50,000 Hours		
MacAdam's Ellipses (SDCM)	2-Step Binning (For Static White LEDs only)		
Certifications	ETL Listed: UL 2108 Issued: 2004/02/27 Ed: 1 Rev: 2014/02/24 Low Voltage Lighting Systems CSA C22.2#9.0 Issued: 1996/06/01 Ed: 1 (R2011) General Requirements for Luminaries; with Gen. Inst. 1: 1997, Gen Inst. 2: 1998. ROHS compliant UL 2108 - Low Voltage Lighting Systems UL 8750 - Light Emitting Diode (LED) Equipment for Use in Lighting Products UL 1598 / CSA 250.0-08 - Luminaires		

ASSEMBLY OPTIONS



ON-SITE ASSEMBLY
Cut to length with soldered leads, assembled on-site

BENEFITS:
Run Lengths can be trimmed in the field
Last minute adjustments
Shorter lead time



FACTORY ASSEMBLY
Pre-assembled factory finished fixtures
(Max assembled length is 78")

BENEFITS:
Easy and quick installation
Shipped as a complete unit
Plug-and-play installation

GENLED Acolyte® does not warrant or represent that the information is free from errors or omission. The information may change without notice and **GEN**LED Acolyte® is not in any way liable for the accuracy of any information printed and stored or in any way interpreted or used.

SPECIFICATIONS

Available Wattages	Cuttable Length	LED Pitch	Color Temp.	lm/W without Lens	Delivered Lumens with Clear Lens	Delivered Lumens with Frosted Lens	Delivered Lumens with Milky Lens	Standard Cable Length	Compatible with Channel		
									IP20	IP65	IP68
1.5 White Series 2	3.94 in (100 mm)	24 LEDs/ft (80 LEDs/m)	2400K	110.7	152.7 lm/ft (500.8 lm/m)	141.1 lm/ft (462.7 lm/m)	116.2 lm/ft (381.1 lm/m)	12 in (30.5 cm)	✓	✓	✓
			2700K	123.8	171.1 lm/ft (561.2 lm/m)	157.9 lm/ft (517.9 lm/m)	130 lm/ft (426.5 lm/m)				
			3000K	131	180.9 lm/ft (593.4 lm/m)	167 lm/ft (547.7 lm/m)	137.5 lm/ft (451 lm/m)				
			3500K	134	185.1 lm/ft (607.2 lm/m)	170.9 lm/ft (560.4 lm/m)	140.7 lm/ft (461.5 lm/m)				
			4000K	134	185.1 lm/ft (607.2 lm/m)	170.9 lm/ft (560.4 lm/m)	140.7 lm/ft (461.5 lm/m)				
			6000K	127.9	176.7 lm/ft (579.6 lm/m)	163.1 lm/ft (534.9 lm/m)	134.3 lm/ft (440.5 lm/m)				
2.2 White Series 2	3.94 in (100 mm)	24 LEDs/ft (80 LEDs/m)	2400K	108.2	218.9 lm/ft (718 lm/m)	202.3 lm/ft (663.5 lm/m)	166.6 lm/ft (546.4 lm/m)	12 in (30.5 cm)	✓	✓	✓
			2700K	121.1	245.3 lm/ft (804.7 lm/m)	226.4 lm/ft (742.6 lm/m)	186.5 lm/ft (611.6 lm/m)				
			3000K	128	259.4 lm/ft (850.8 lm/m)	239.4 lm/ft (785.2 lm/m)	197.2 lm/ft (646.7 lm/m)				
			3500K	131	265.4 lm/ft (870.6 lm/m)	245 lm/ft (803.5 lm/m)	201.7 lm/ft (661.7 lm/m)				
			4000K	131	265.4 lm/ft (870.6 lm/m)	245 lm/ft (803.5 lm/m)	201.7 lm/ft (661.7 lm/m)				
			6000K	125	253.4 lm/ft (831 lm/m)	233.8 lm/ft (767 lm/m)	192.6 lm/ft (631.6 lm/m)				
3.0 White Series 2	1.97 in (50 mm)	48 LEDs/ft (160 LEDs/m)	2400K	109.8	303.1 lm/ft (994.1 lm/m)	280.1 lm/ft (918.6 lm/m)	230.6 lm/ft (756.5 lm/m)	12 in (30.5 cm)	✓	✓	✓
			2700K	122.9	339.6 lm/ft (1114 lm/m)	313.5 lm/ft (1028.1 lm/m)	258.1 lm/ft (846.7 lm/m)				
			3000K	130	359.1 lm/ft (1177.9 lm/m)	331.4 lm/ft (1087.1 lm/m)	273 lm/ft (895.3 lm/m)				
			3500K	133	367.5 lm/ft (1205.3 lm/m)	339.2 lm/ft (1112.4 lm/m)	279.3 lm/ft (916.1 lm/m)				
			4000K	133	367.5 lm/ft (1205.3 lm/m)	339.2 lm/ft (1112.4 lm/m)	279.3 lm/ft (916.1 lm/m)				
			6000K	127	350.8 lm/ft (1150.5 lm/m)	323.7 lm/ft (1061.8 lm/m)	266.6 lm/ft (874.5 lm/m)				
4.4 White Series 2	1.97 in (50 mm)	48 LEDs/ft (160 LEDs/m)	2400K	109	441.2 lm/ft (1447 lm/m)	407.7 lm/ft (1337.1 lm/m)	335.7 lm/ft (1101.2 lm/m)	12 in (30.5 cm)	✓	✓	✓
			2700K	122	494.4 lm/ft (1621.6 lm/m)	456.3 lm/ft (1496.6 lm/m)	375.8 lm/ft (1232.5 lm/m)				
			3000K	129	522.8 lm/ft (1714.7 lm/m)	482.5 lm/ft (1582.5 lm/m)	397.3 lm/ft (1303.2 lm/m)				
			3500K	132	534.9 lm/ft (1754.5 lm/m)	493.7 lm/ft (1619.3 lm/m)	406.6 lm/ft (1333.5 lm/m)				
			4000K	132	534.9 lm/ft (1754.5 lm/m)	493.7 lm/ft (1619.3 lm/m)	406.6 lm/ft (1333.5 lm/m)				
			6000K	126	510.6 lm/ft (1674.8 lm/m)	471.2 lm/ft (1545.7 lm/m)	388.1 lm/ft (1272.9 lm/m)				
5.0 White Series 2	1.4 in (35.7 mm)	68 LEDs/ft (224 LEDs/m)	2400K	109.8	505.1 lm/ft (1656.8 lm/m)	466.8 lm/ft (1531 lm/m)	384.4 lm/ft (1260.8 lm/m)	12 in (30.5 cm)	✓	✓	
			2700K	122.9	566.1 lm/ft (1856.7 lm/m)	522.4 lm/ft (1713.6 lm/m)	430.2 lm/ft (1411.2 lm/m)				
			3000K	130	598.5 lm/ft (1963.2 lm/m)	552.4 lm/ft (1811.9 lm/m)	454.9 lm/ft (1492.1 lm/m)				
			3500K	133	612.5 lm/ft (2008.9 lm/m)	565.3 lm/ft (1854 lm/m)	465.5 lm/ft (1526.8 lm/m)				
			4000K	133	612.5 lm/ft (2008.9 lm/m)	565.3 lm/ft (1854 lm/m)	465.5 lm/ft (1526.8 lm/m)				
			6000K	127	584.6 lm/ft (1917.6 lm/m)	539.6 lm/ft (1769.7 lm/m)	444.3 lm/ft (1457.4 lm/m)				
6.0 White Series 2	1.4 in (35.7 mm)	68 LEDs/ft (224 LEDs/m)	2400K	109	601.6 lm/ft (1973.2 lm/m)	555.9 lm/ft (1823.4 lm/m)	457.8 lm/ft (1501.6 lm/m)	12 in (30.5 cm)	✓	✓	
			2700K	122	674.2 lm/ft (2211.3 lm/m)	622.2 lm/ft (2040.8 lm/m)	512.4 lm/ft (1680.7 lm/m)				
			3000K	129	712.9 lm/ft (2338.2 lm/m)	657.9 lm/ft (2157.9 lm/m)	541.8 lm/ft (1777.1 lm/m)				
			3500K	132	729.4 lm/ft (2392.5 lm/m)	673.2 lm/ft (2208.1 lm/m)	554.4 lm/ft (1818.4 lm/m)				
			4000K	132	612.5 lm/ft (2008.9 lm/m)	673.2 lm/ft (2208.1 lm/m)	554.4 lm/ft (1818.4 lm/m)				
			6000K	126	696.3 lm/ft (2283.8 lm/m)	642.6 lm/ft (2107.7 lm/m)	529.2 lm/ft (1735.8 lm/m)				

SPECIFICATIONS

Available Wattages	Cuttable Length	LED Pitch	Color Temp.	lm/W without Lens	Delivered Lumens with Clear Lens	Delivered Lumens with Frosted Lens	Delivered Lumens with Milky Lens	Standard Cable Length	Compatible with Channel		
									IP20	IP65	IP68
1.5 Color Series 2	3.94 in (100 mm)	24 LEDs/ft (80 LEDs/m)	Red	41.0	56.6 lm/ft (185.6 lm/m)	52.3 lm/ft (171.5 lm/m)	43.1 lm/ft (141.4 lm/m)	12 in (30.5 cm)	✓	✓	✓
			Green	123.0	169.9 lm/ft (557.4 lm/m)	156.8 lm/ft (514.4 lm/m)	129.2 lm/ft (423.612 lm/m)				
			Blue	25.0	34.5 lm/ft (113.3 lm/m)	31.9 lm/ft (104.6 lm/m)	26.3 lm/ft (86.1 lm/m)				
			Amber	31.0	42.8 lm/ft (140.5 lm/m)	39.5 lm/ft (129.6 lm/m)	32.6 lm/ft (106.764 lm/m)				
2.2 Color Series 2	3.94 in (100 mm)	24 LEDs/ft (80 LEDs/m)	Red	40.0	80.9 lm/ft (265.5 lm/m)	74.8 lm/ft (245.3 lm/m)	61.6 lm/ft (202.048 lm/m)	12 in (30.5 cm)	✓	✓	✓
			Green	113.0	229.0 lm/ft (751.0 lm/m)	211.3 lm/ft (693.1 lm/m)	174.0 lm/ft (570.7856 lm/m)				
			Blue	23.0	46.6 lm/ft (152.9 lm/m)	43.0 lm/ft (141.1 lm/m)	35.4 lm/ft (116.1776 lm/m)				
			Amber	31.0	62.8 lm/ft (206.6 lm/m)	58.0 lm/ft (190.1.5 lm/m)	47.7 lm/ft (165.5872 lm/m)				
3.0 Color Series 2	1.97 in (50 mm)	48 LEDs/ft (160 LEDs/m)	Red	40.0	110.4 lm/ft (362.1 lm/m)	102.0 lm/ft (334.6 lm/m)	84.0 lm/ft (275.52 lm/m)	12 in (30.5 cm)	✓	✓	✓
			Green	127.0	350.9 lm/ft (1151.0 lm/m)	323.9 lm/ft (1062.2 lm/m)	266.7 lm/ft (874.776 lm/m)				
			Blue	25.0	69.1 lm/ft (226.6 lm/m)	63.8 lm/ft (209.1 lm/m)	52.5 lm/ft (172.2 lm/m)				
			Amber	28.0	80.1 lm/ft (262.8 lm/m)	74.0 lm/ft (242.6 lm/m)	60.9 lm/ft (199.752 lm/m)				
4.4 Color Series 2	1.97 in (50 mm)	48 LEDs/ft (160 LEDs/m)	Red	38.0	153.8 lm/ft (504.5 lm/m)	142.1 lm/ft (466.2 lm/m)	117.0 lm/ft (383.8912 lm/m)	12 in (30.5 cm)	✓	✓	✓
			Green	117.0	474.1 lm/ft (1555.1 lm/m)	437.6 lm/ft (1435.3 lm/m)	360.4 lm/ft (1181.981 lm/m)				
			Blue	24.0	97.3 lm/ft (319.0 lm/m)	89.8 lm/ft (294.4 lm/m)	73.9 lm/ft (242.4576 lm/m)				
			Amber	25.0	101.3 lm/ft (332.2 lm/m)	93.5 lm/ft (306.7 lm/m)	77.0 lm/ft (252.56 lm/m)				
5.0 Color Series 2	1.4 in (35.7 mm)	68 LEDs/ft (224 LEDs/m)	Red	37.0	170.2 lm/ft (558.2 lm/m)	157.3 lm/ft (515.8 lm/m)	129.5 lm/ft (424.76 lm/m)	12 in (30.5 cm)	✓	✓	
			Green	116.0	534.2 lm/ft (1752.1 lm/m)	493.0 lm/ft (1617.0 lm/m)	406.0 lm/ft (1331.68 lm/m)				
			Blue	24.0	110.5 lm/ft (362.5 lm/m)	102.0 lm/ft (334.6 lm/m)	84.0 lm/ft (275.52 lm/m)				
			Amber	26.0	119.7 lm/ft (392.7 lm/m)	110.5 lm/ft (362.4 lm/m)	91.0 lm/ft (298.48 lm/m)				
6.0 Color Series 2	1.4 in (35.7 mm)	68 LEDs/ft (224 LEDs/m)	Red	37.0	204.2 lm/ft (669.8 lm/m)	188.7 lm/ft (618.9 lm/m)	155.4 lm/ft (509.712 lm/m)	12 in (30.5 cm)	✓	✓	
			Green	113.0	624.4 lm/ft (2048.2 lm/m)	576.3 lm/ft (1890.3 lm/m)	474.6 lm/ft (1556.688 lm/m)				
			Blue	23.0	127.1 lm/ft (416.9 lm/m)	96.6 lm/ft (384.7 lm/m)	316.848 lm/ft (1777.1 lm/m)				
			Amber	24.0	132.6 lm/ft (435.0 lm/m)	100.8 lm/ft (401.5 lm/m)	330.624 lm/ft (1818.4 lm/m)				

AVAILABLE DRIVERS

NON-DIMMING ELECTRONIC DRIVERS



60W, 100W Non-Dimming Electronic Class 2 Drivers

Part No.:
- DRVW2460HTC (60 Watt)
- DRV24100HTC (100 Watt)

Output Voltage: 24 V
Voltage Range: 120-277 VAC
IP Rating: Dry or Damp
UL Listed



240W, 320W Non-Dimming Electronic Drivers

Part No.:
- DRVW24240 (240 Watt)
- DRVW24320 (320 Watt)

Output Voltage: 24 V
Voltage Range: 90-305 VAC
IP Rating: Dry or Damp
UL Recognized

LUTRON HI-LUME DRIVERS



40W, 96W Class 2 Lutron Hi-Lume Drivers

Part No.:
- DRVLUT24403W (40 Watt)
- DRVLUT24402W (40 Watt)
- DRVLUT24963W (96 Watt)

Output Voltage: 24 V
Voltage Range: 120-277 VAC or 120V (2-wire model)
IP Rating: Dry or Damp
Dimmable using 2-wire forward phase
or 3-wire ecosystem
UL Listed

MAGNETIC, ELV & MLV DRIVERS WITH COMPATIBLE DIMMERS.



60W, 96W, 200W, 300W Class 1 & 2 Magnetic Drivers

Part No.:
- DRVWDIM2460 (60 Watt)
- DRVWDIM24100, (96 Watt)
- DRVWDIM24200 (200 Watt)
- DRVWDIM24300 (300 Watt)

Magnetic Driver
Output Voltage: 24 V
Voltage Range: 120-277 VAC
IP Rating: Dry or Damp
Forward Phase Dimming
ETL Listed



60W, 96W, 150W, 200W ELV & MLV Drivers

Part No.:
- DRVW2460ELV (60 Watt)
- DRVW2496ELV (96 Watt)
- DRVW24150ELV (150 Watt)
- DRVW24200ELV (200 Watt)

Line Voltage Dimmable Drivers
Output Voltage: 24 V
Voltage Range: 100-130 VAC
IP Rating: Dry or Damp
Dimmable
ETL, UL and CSA Listed



LUTRON Skylark Contour Dimmer

Part No.: TRIDIMSKY
Width: 2.94 in (75 mm)
Length: 4.69 in (120 mm)
Depth: 0.30 in (7.6 mm)

· Single pole and 3-way versions
· Compatible with **GEN**LED Acolyte Triac Dimmer
· Slide adjusts brightness and On/Off control
· 30 mA max control current
· Available in White finish



LUTRON NOVA-T Dimmer

Part No.: TRIDIMNOVA
Width: 2.75 in (70 mm)
Length: 4.56 in (116 mm)
Depth: 0.30 in (7.6 mm)

· Slide adjusts brightness and On/Off control
· 30 mA max control current
· Available in White finish



LUTRON DIVA Dimmer

Part No.: TRIDIMDIVA
(With Locator Light) TRIDIMDIVAL
Width: 2.94 in (75 mm)
Length: 4.69 in (120 mm)
Depth: 0.30 in (7.6 mm)

· Large paddle switch with a captive linear-slide dimmer
· 30 mA max control current
· Available in White finish
· Available with locator light which glows green when the switch is off

*For more options, please reference the Optional Dimmer List on **GEN**LED Acolyte®'s product website page.

AVAILABLE DRIVERS / WIRE GAUGE CHART

0-10V DRIVERS AND DIMMERS



96W 0-10V Electronic Driver

Part No.: DRVW2496-10
Output Voltage: 24 V
Voltage Range: 120-277 VAC
IP Rating: IP65
0-10V dimming with
no module needed
UL Listed



LUTRON DIVA Dimmer

Part No.: LVDIMDIVA
Width: 2.94 in (75 mm)
Length: 4.69 in (120 mm)
Depth: 0.30 in (7.6 mm)

· Compatible with 0-10 V Dimming Module
· Large paddle switch with a captive linear-slide dimmer
· 30 mA max control current
· Available in White finish



LUTRON NOVA-T Dimmer

Part No.: LVDIMNOVA
Width: 2.75 in (70 mm)
Length: 4.56 in (116 mm)
Depth: 0.30 in (7.6 m m)

· Compatible with 0-10 V Dimming Module
· Slide adjusts brightness and On/Off control
· 30 mA max control current
· Available in White finish

DRIVER AND RIBBONLYTE AT FULL LOAD

Wattages	40		60		96 + 100		150		200		240		300		320	
Wire Gauge	Feet	Meters	Feet	Meters	Feet	Meters	Feet	Meters	Feet	Meters	Feet	Meters	Feet	Meters	Feet	Meters
24 AWG	14	4.27	9	2.74	5.5	1.68	3.75	1.14	2.75	0.84	2.25	0.69	1.75	0.53	1.75	0.53
22 AWG	22	6.71	14	4.27	9	2.74	5.75	1.75	4.5	1.37	3.5	1.07	2.75	0.84	2.75	0.84
20 AWG	35	10.67	23	7.01	14	4.27	9	2.74	7	2.13	5.75	1.75	4.5	1.37	4.25	1.30
18 AWG	56	17.07	37	11.28	23	7.01	15	4.57	11	3.35	9	2.74	7.5	2.29	7	2.13
16 AWG	90	27.44	60	18.29	37	11.28	24	7.32	18	5.49	15	4.57	12	3.66	11	3.35
14 AWG	142	43.29	95	28.96	59	17.99	38	11.59	28	8.54	23	7.01	19	5.79	17	5.18
12 AWG	226	68.90	151	46.04	94	28.66	60	18.29	45	13.72	37	11.28	30	9.15	28	8.54
10 AWG	360	109.76	240	73.17	150	45.73	96	29.27	72	21.95	60	18.29	48	14.63	45	13.72
8 AWG	574	175.00	381	116.16	239	72.87	153	46.65	115	35.06	95	28.96	76	23.17	71	21.65

WIRING DIAGRAMS

0-10V

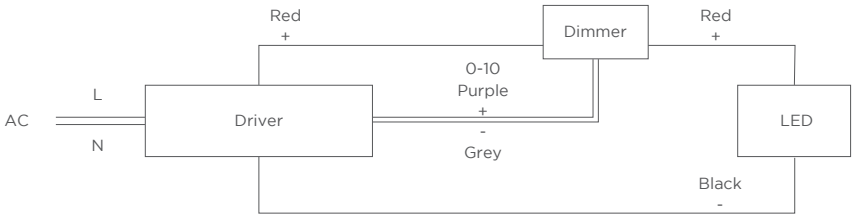

MAGNETIC + ELV

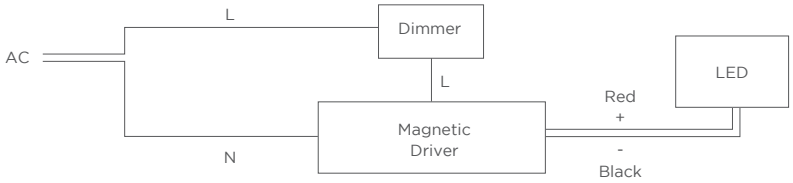

DMX

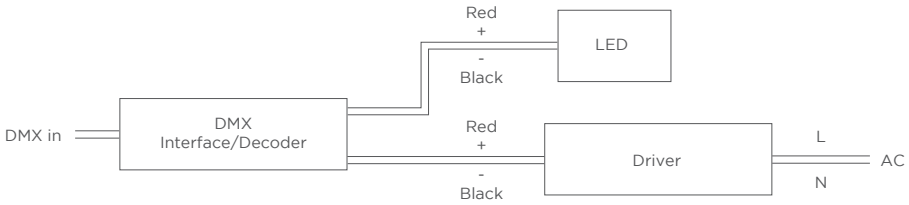

WIRE COLORS PER RIBBONLYTE COLOR

STATIC WHITE + STATIC COLOR
Red Wire (+) Positive
Black Wire (-) Negative

CONNECTION OPTIONS

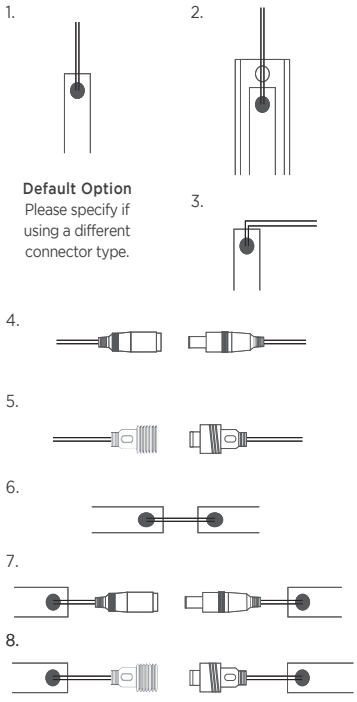

REV.31MAY2019

YS6

Lam Partners
ARCHITECTURAL LIGHTING DESIGN

WAGNER
ARCHITECTURAL SYSTEMS



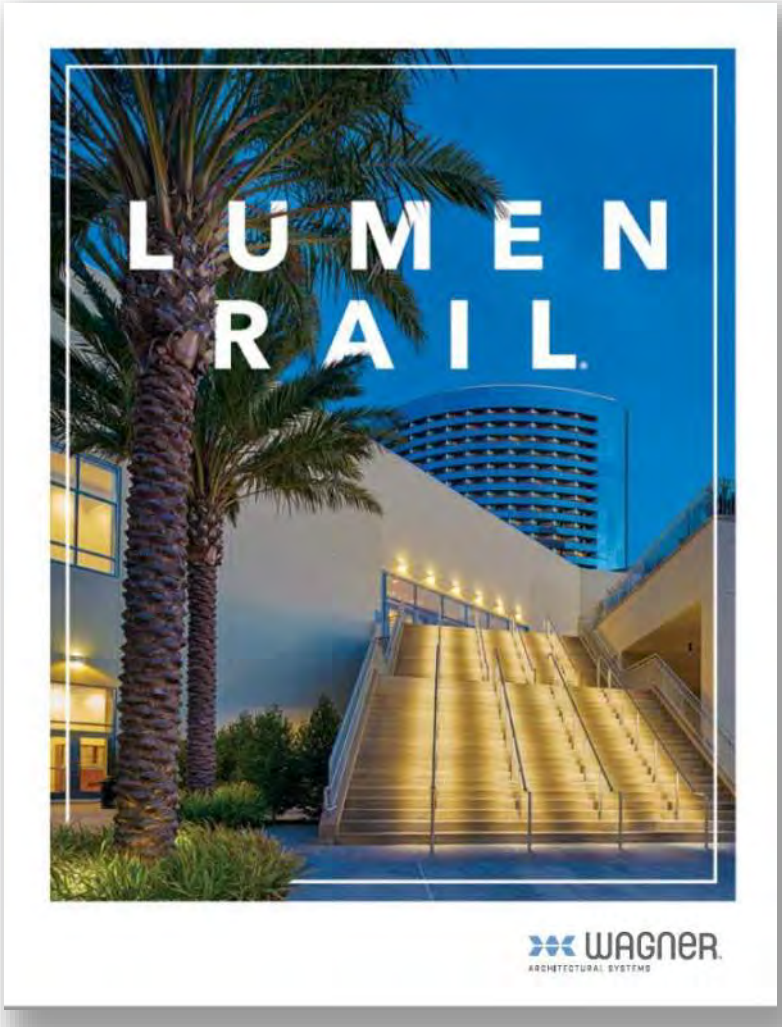

LUMENRAIL DESIGN SPECIFICATION GUIDE

2018 EDITION

Welcome to Wagner™ Architectural Systems. We are a leading global provider of architecturalrailing systems dedicated to producing life safety and lighting products that meet the highest standards of quality, engineering and code compliance.We work with architects, lighting designers, engineers and contractors to deliver complete product systems, or custom engineer and fabricate design-specific railing and panel solutions that provide safety, assist navigation, and elevate the architectural aesthetic of common space designs.

With expertise in manufacturing, code requirements and addressing LEED building standards, we are a partner who can meet your specifications and deliver installations with the fit, finish, beauty and performance you desire.

Common areas and pedestrian walkways have specific lighting requirements to ensure safe navigation and access in dark or lowlight conditions. These same walkways also require the use of handrails to protect, guide and assist pedestrians on ramps, landings, stairs and balconies. Lumenrail combines these lighting and safety requirements into one seamless, illuminated, protective assembly.

To learn more about working with Wagner Architectural Systems or to discuss your project, visit us at **wagnerarchitectural.com**, or call us at 888.243.6914

Specification Process - Customer - Wagner Architectural

1. RFQ - rfq@mailwagner.com
    a. Drawings - elevation and plan views
        i. Providing highlighted drawings, has proven to reduce our turn-around time on quotation requests.
    b. Schedule - occupancy, concrete or off-site date
    c. Specifications - luminaires, metal, finish, design details
2. Per/Foot quote based on review of submitted information
3. Quote review - quote modifications - quote approval
4. PO for Wagner Engineering drawings, 50%
    a. Customer packet review
    b. Site dimensions or schedule for site dimensions
5. Code review, design detail revisions (3 rounds included)
    a. Approved signed Wagner Engineering drawings
    b. Project release
6. Final production engineering
7. Production
    a. Balance due 50%
8. Shipment - Customer support

Please visit **wagnerarchitectural.com** for specification sheets, photometric information and installation instructions.

© 2018 R&B WAGNER, INC
WAGNERARCHITECTURAL.COM
LUSY GUIDE R1

DESIGN SPECIFICATIONS
LUMENRAIL LUMINAIRES

ETL LISTED	CLASS 2 REQUIRED	5 YEARS	24VDC	80+
	DRIVER	WARRANTY	INPUT VOLTAGE	CRI

LUMENRAIL® AVAILABLE CONTROL & SAFETY OPTIONS	- 0-10V (PWM) STD - DALI - DMX	- REMOTE 100W STD DIMMING - REMOTE MADE IN USA 100W DIMMING - INTEGRATED POST 100W DIMMING	- SURGE PROTECTION - FUSING	NOT ALL OPTIONS ARE COMPATABLE. PLEASE VERIFY COMBINATIONS WITH YOUR LOCAL REPRESENTATIVE
	DIMMING PROTOCOLS	DRIVER OPTIONS	PROTECTION OPTIONS	OPTION COMPATABILITY

LUMINIARE **PART NUMBER BUILDER**



LULS						
FIXTURE TYPE	COLOR TEMP	FIXTURE WATTAGE	BEAM ANGLE	LENS / OPTIC	LENGTH NOMINAL - ASSEMBLED	
LULS - Lumenlinear™	**27K** - 2700° K **30K** - 3000° K **35K** - 3500° K **40K** - 4000° K **50K** - 5000° K	**20** - 1.85 W/FT **40** - 3.57 W/FT **60** - 5.45 W/FT	**70** - 70° Spread *Main Beam @ 45° above nadir* OR **70** - 70° Spread **120** - 120° Spread	**TA** - Transparent Asymmetric **MA** - Matte Asymmetric **TS** - Transparent Symmetric **MS** - Matte Symmetric	**6** - 7.64″ **12** - 13.51″ **18** - 19.39″ **24** - 25.33″ **30** - 31.23″ **36** - 37.14″ **42** - 43.07″	**48** - 48.95″ **54** - 54.89″ **60** - 60.83″ **66** - 67.20″ **72** - 73.20″ **78** - 79.20″ **84** - 85.20″

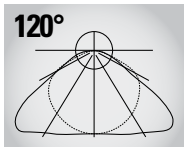

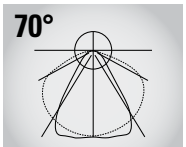

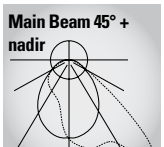



LULR					
FIXTURE TYPE	RAIL SIZE	COLOR TEMP	OPTIC	DRIVE CURRENT	
LULR - Lumenpod® 28	**50** - 1.50" (38mm) Dia .120" Wall Tube **66** - 1.66" (42mm) Dia Schedule 40 Pipe **90** - 1.90" (48mm) Dia Schedule 40 Pipe	**27K** - 2700° K **30K** - 3000° K **40K** - 4000° K **50K** - 5000° K **BLU** - Blue **GRN** - Green **RED** - Red **AMB** - Amber	**A** - ASYMMETRIC	**5** - 500 mA **3** - 350 mA **1.7 W @** 350 mA 2.4 W @ 500 mA FIXTURE WATTAGE	



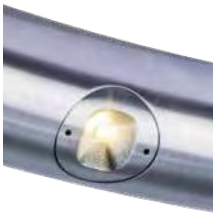

LULR					
FIXTURE TYPE	RAIL SIZE	COLOR TEMP	OPTIC	DRIVE CURRENT	
LULR - Lumenpod® 28	**50** - 1.50" (38mm) Dia .120" Wall Tube **66** - 1.66" (42mm) Dia Schedule 40 Pipe **90** - 1.90" (48mm) Dia Schedule 40 Pipe	**27K** - 2700° K **30K** - 3000° K **40K** - 4000° K **50K** - 5000° K **BLU** - Blue **GRN** - Green **RED** - Red **AMB** - Amber	**S** - SYMMETRIC	**5** - 500 mA **3** - 350 mA **1.7 W @** 350 mA 2.4 W @ 500 mA FIXTURE WATTAGE	



Specifications may change without prior notice, verify data at time of order, all rights reserved

DESIGN SPECIFICATIONS
LUMENRAIL LUMINAIRES

ETL LISTED	CLASS 2 REQUIRED	5 YEARS	24VDC	80+
	DRIVER	WARRANTY	INPUT VOLTAGE	CRI

LUMENRAIL® AVAILABLE CONTROL & SAFETY OPTIONS	0-10V (PWM), DALI, DMX	REMOTE 100W STD DIMMING REMOTE MADE IN USA 100W DIMMING INTEGRATED POST 100W DIMMING	SURGE PROTECTION FUSING	NOT ALL OPTIONS ARE COMPATABLE. PLEASE VERIFY COMBINATIONS WITH YOUR LOCAL REPRESENTATIVE
	DIMMING PROTOCOLS	DRIVER OPTIONS	PROTECTION OPTIONS	OPTION COMPATABILITY

LUMINIARE **PART NUMBER BUILDER**



LULF			
FIXTURE TYPE	COLOR TEMP	OPTIC	DRIVE CURRENT
LULF - Lumenpod® 16 * Indicates Stock Options	**27K** - 2700° K *30K - 3000° K *40K - 4000° K **50K** - 5000° K **BLU** - Blue **GRN** - Green **RED** - Red **AMB** - Amber	**16** - 16° beam **23** - 23° beam **46** - 46° beam *70 - 70° beam **94** - 94° beam	*5 - 500 mA *3 - 350 mA *Extended life 100,000HR version requires 350 mA*

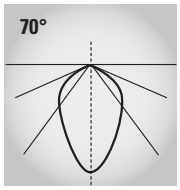

Symmetric Orientation



Asymmetric Orientation

Asymmetric performance can be fine tuned on fabricated systems by rotating the fixture around the rail diameter. A 25° angle provides superb illumination results in most applications. IES reports to view or download are available by scanning the QR code or visiting our website. The 70° optic is our standard, stock option, all other options are available, but support a longer lead time.

FIXTURE WATTAGE
1.7 W @ 350 mA 2.4 W @ 500 mA



LULF				
FIXTURE TYPE	COLOR TEMP	OPTIC	DRIVE CURRENT	BANTAM
LULF-XT - Bantam™ * Indicates Stock Options	**27K** - 2700° K *30K - 3000° K *40K - 4000° K **50K** - 5000° K **BLU** - Blue **GRN** - Green **RED** - Red **AMB** - Amber	**16** - 16° beam **23** - 23° beam **46** - 46° beam *70 - 70° beam **94** - 94° beam	*5 - 500 mA *3 - 350 mA *Extended life 100,000HR version requires 350 mA*	**XTR** - Machined 316 SS, post mount housing **XTF** - Machined 316 SS, flat surface-mount housing

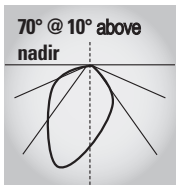

Bantam is designed with an inherent 10° bias above nadir. This asymmetric feature projects the output from the mounting surface towards the path or feature. IES reports to view or download are available by scanning the QR code or visiting our website. The 70° optic is our standard, stock option, all other options are available, but support a longer lead time.

FIXTURE WATTAGE
1.7 W @ 350 mA 2.4 W @ 500 mA

Specifications may change without prior notice, verify data at time of order, all rights reserved

WAGNER ARCHITECTURAL SYSTEMS
888.243.6914 // SYSTEMS@MAILWAGNER.COM
10600 West Brown Deer Road // Milwaukee, WI 53224, USA

© 2018 R&B WAGNER, INC
WAGNERARCHITECTURAL.COM
LUSY GUIDE R1

DESIGN SPECIFICATIONS
LUMENLINEAR



Our linear product is a state-of-the-art, low-voltage LED light fixture that provides exceptional lighting performance to enhance any stairway, ramp or walkway application. Its soft light provides ample illumination for safety and ambiance without the glare or harshness of overhead lighting. Available with warm, neutral or cool white color temperatures, and a range of solid color options for static hues. Standard, mid and high output offerings make Lumenlinear a highly flexible and practical solution for adding beauty and light to your life safety installations.

SCAN QR CODE or visit our web site for additional technical information, product specification sheets, downloads, instructions, and system configuration guides. **wagnerarchitectural.com**

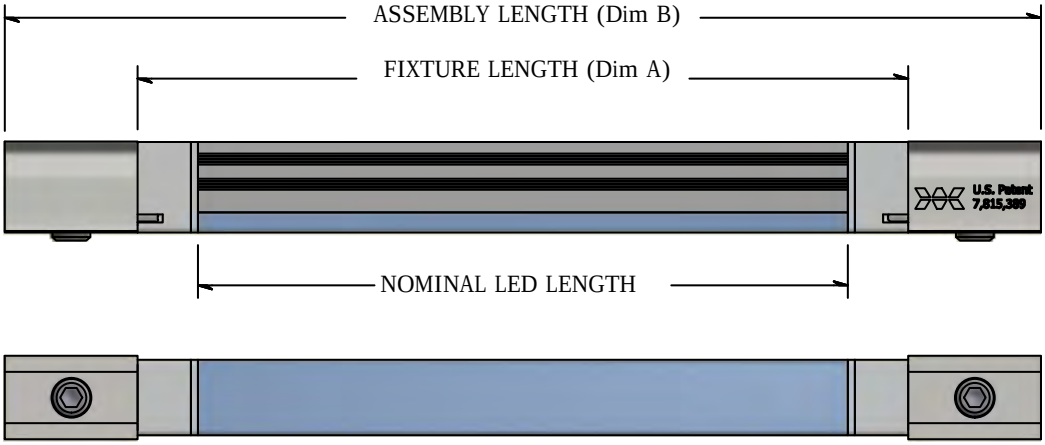

LED LENGTHS (In)			
Nominal	Dim A	Dim B	Opening
6	7.7	10.3	13.3
12	13.6	16.2	19.3
18	19.4	22.1	25.1
24	25.4	28.1	31.1
30	31.4	34.1	37.1
36	37.6	40.3	43.3
42	43.2	45.8	48.8
48	49.1	51.8	54.8
54	55.1	57.7	60.7
60	60.9	63.6	66.6
66	67.2	69.8	72.8
72	73.2	75.8	78.8
78	79.2	81.7	84.7
84	85.2	87.6	90.6

NOTE:
WAGNER RECOMMENDS 1.5" CLEARANCE ON EACH SIDE OF FIXTURE ASSEMBLY TO ACCOMMODATE WIRING CONNECTIONS. THE LENGTH IN THE "OPENING" COLUMN HAS THIS CLEARANCE ADDED.

© 2018 R&B WAGNER, INC

DESIGN SPECIFICATIONS
LUMENLINEAR

Installation Assembly

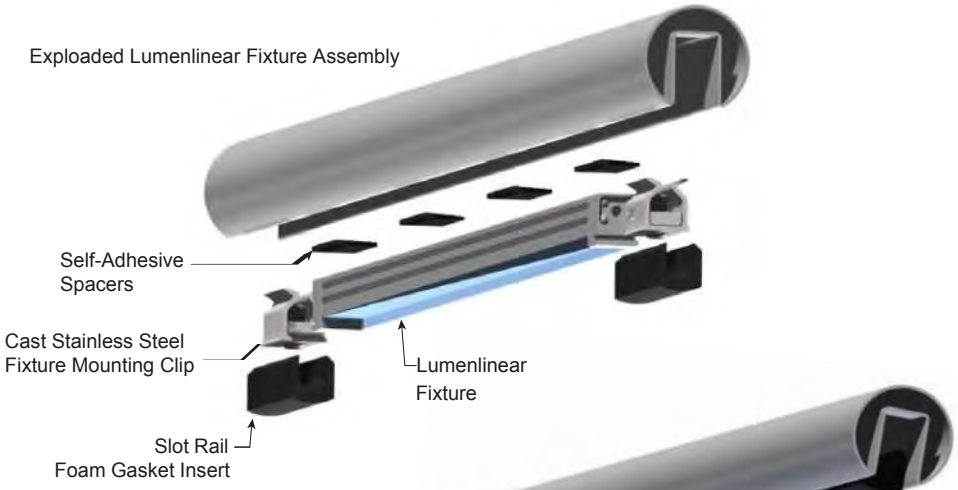


CAST LIGHT CLIP DETAIL

Performance & Capabilities



LUMENRAIL: CONDUCTOR QTY. BY-PASS LIMITATIONS			
WIRE GUAGE	1.5" D	1.66" D	1.90" D
14 AWG	2	2	6
12 AWG	X	X	4
10 AWG	X	X	2

Conductor supply and guage specification by others

LUMENLINEAR: QUANTITY, DISTANCE & CONDUCTOR SPECIFICATION EXAMPLE					
WIRE GUAGE	18 AWG	16 AWG	14 AWG	12 AWG	10AWG
REMOTE DISTANCE TO LAST FIXTURE	18'	29'	46'	71'	120'

SUITABLE VALUES FOR 100W, 24VDC @ 500mA DRIVE CURRENT.
Actual distances will vary depending on the total load, drive current, wire guage and fixture spacing.
Verify all distance caculations with overall design of system. Conductor supply and guage specification by others.

LUMENLINEAR - LUMENS/FT SPECIFICATIONS USING 120° OUTPUT:						
	2W/FT		4W/FT		6W/FT	
LENS SPECIFICATION	MATTE	TRANSPARENT	MATTE	TRANSPARENT	MATTE	TRANSPARENT
CCT 3000° K	131 lm	147 lm	235 lm	268 lm	336 lm	383 lm
CCT 4000° K	132 lm	152 lm	247 lm	284 lm	361 lm	413 lm

Download IES files from our web site or contact factory for other configuration data.

Cap-Rail Dimensions

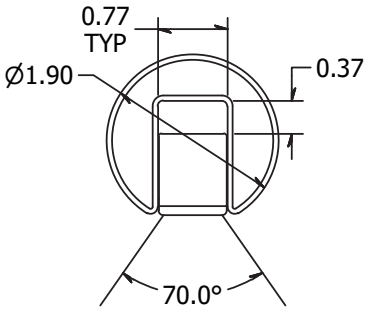

70° SYMMETRIC
IN 1.90 RAIL

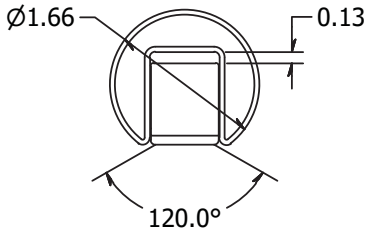

120° SYMMETRIC
IN 1.66 RAIL

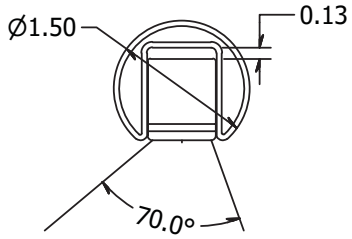

70° ASYMMETRIC
IN 1.50 RAIL
THROW DIRECTION DETERMINED
AT INSTALLATION

WAGNER ARCHITECTURAL SYSTEMS
888.243.6914 // SYSTEMS@MAILWAGNER.COM
10600 West Brown Deer Road // Milwaukee, WI 53224, USA

© 2018 R&B WAGNER, INC
WAGNERARCHITECTURAL.COM
LUSY GUIDE R1

DESIGN SPECIFICATIONS

LUMENPOD 28



The evolution of the handrail point source from Wagner Architectural Systems has performance that leverages the latest LED technology and manufacturing techniques. This USA engineered and manufactured luminaire is designed for pathway, stair and ramp illumination. Both the asymmetric and symmetric versions have optical characteristics developed specifically for these applications. The Lumenpod 28 provides a flush-profile architectural solution for new or retrofit projects, including egress compliance opportunities.

SCAN QR CODE or visit our web site for additional technical information, product specification sheets, downloads, instructions, and system configuration guides. **wagnerarchitectural.com**



Lumenpod 28 has a patent pending design that features a simple push in installation and is provided with our specifically designed de-installation tool when service might be required.

Lumenpod 28 is specifically toleranced to fit these handrail materials:

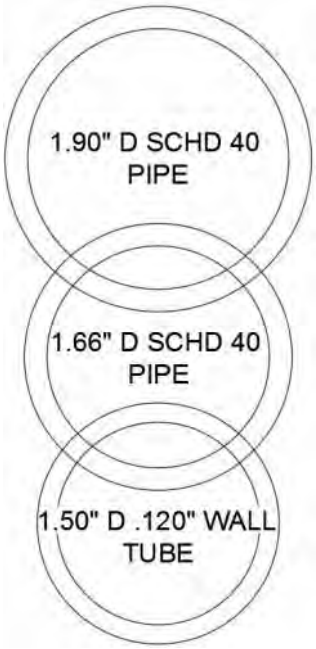

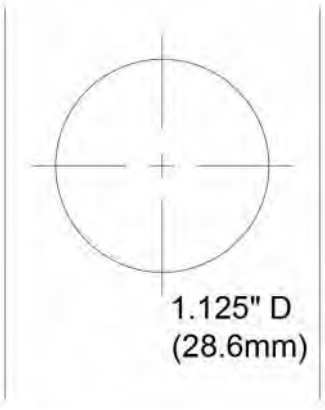

Wagner Architectural will machine our material specifically for your project or you can machine the required mounting holes in the field for retrofit applications. Annular cutters are recommended for stainless steel handrails.

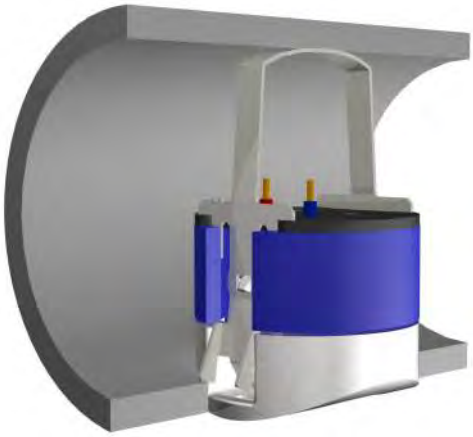

LUMENPOD 28: QUANTITY, DISTANCE & CONDUCTOR SPECIFICATION SAMPLE				
WIRE GUAGE	16 AWG	14 AWG	12 AWG	10AWG
REMOTE DISTANCE TO FIRST POD	20'	45'	70'	95'

SUITABLE VALUES FOR 100W, 24VDC @ 500mA DRIVE CURRENT WITH:

- **34** Lumenpods on 2' spacing using our 100W standard driver
- **26** Lumenpods on 2' spacing using our 100W USA driver

Actual distances will vary depending on the total load, drive current, wire guage and fixture spacing.

Verify all distance caculations with overall design of system. Conductor supply and guage specification by others.

WAGNER ARCHITECTURAL SYSTEMS
888.243.6914 // SYSTEMS@MAILWAGNER.COM
10600 West Brown Deer Road // Milwaukee, WI 53224, USA

© 2018 R&B WAGNER, INC

DESIGN SPECIFICATIONS
LUMENPOD16



The next generation point source from Wagner Architectural Systems has performance that far exceeds the expectations of its discreet 5/8" diameter. The mechanically threaded luminaire is designed for pathway illumination with mounting options for hand rail, guardrail, decks, and shelter or entry structures. Asymmetric performance can be precisely achieved, and superior harsh environment protection and vandal resistance are combined with a simple installation.

SCAN QR CODE or visit our web site for additional technical information, product specification sheets, downloads, instructions, and system configuration guides. **wagnerarchitectural.com**



The Lumenpod 16 installation tool is provided to engage the tamper resistant design

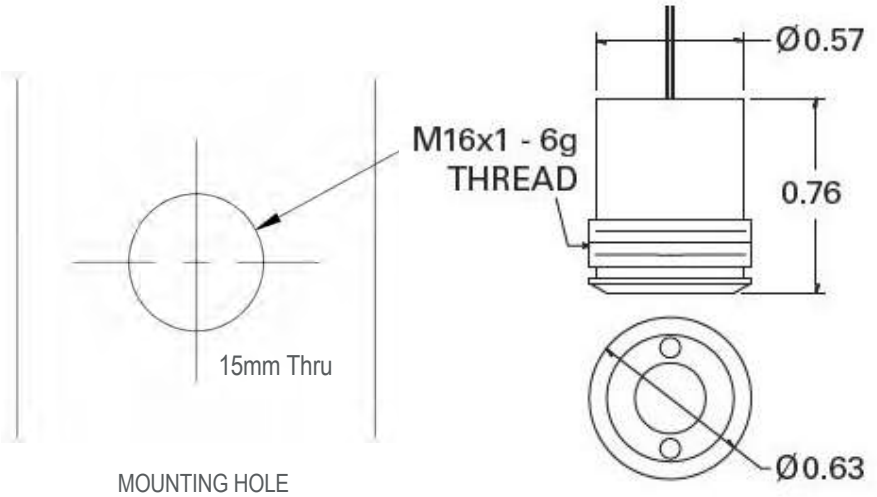

MOUNTING HOLE

Wagner Architectural will drill and tap our material specifically for your project or you can use the following in the field for retrofit applications:
M15 Cutter - annular cutters are recommended for stainless steel applications
M16 Tap - Fastenal Part Number: 3157793

LUMENPOD 16: QUANTITY, DISTANCE & CONDUCTOR SPECIFICATION SAMPLE				
WIRE GUAGE	16 AWG	14 AWG	12 AWG	10AWG
REMOTE DISTANCE TO FIRST POD	20'	45'	70'	95'

SUITABLE VALUES FOR 500mA DRIVE CURRENT WITH:

- **34** Pods on 2' spacing using our 100W standard driver
- **26** Pods on 2' spacing using our 100W USA driver

Actual distances will vary depending on the total load, drive current, wire guage and fixture spacing.
Verify all distance caculations with overall design of system. Conductor supply and guage specification by others.

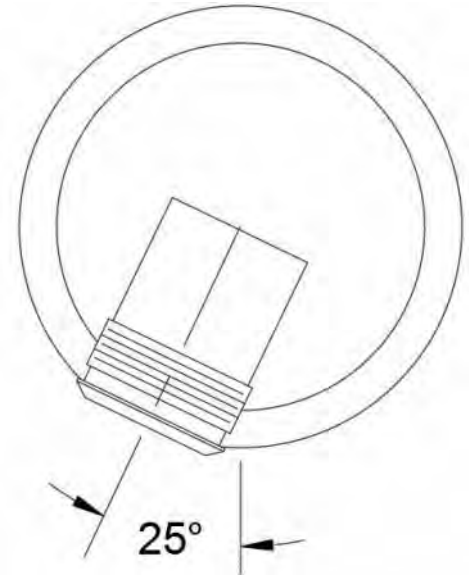

Lumenpod 16 can achieve specific asymmetric performance by rotating its orientation around the diameter of the handrail. 25 degrees from NADIR is a standard reference angle for a fixture with the 70 degree optic.

WAGNER ARCHITECTURAL SYSTEMS
888.243.6914 // SYSTEMS@MAILWAGNER.COM
10600 West Brown Deer Road // Milwaukee, WI 53224, USA

© 2018 R&B WAGNER, INC
WAGNERARCHITECTURAL.COM
LUSY GUIDE R1

DESIGN SPECIFICATIONS
BANTAM



This post mount luminaire is designed for wall grazing and pathway illumination with mounting options for railings, walls, decks, and entry structures. Superior harsh environment protection and vandal resistance are combined with a simple field or factory prepared installation using included 316 stainless steel hardware. The Bantam provides an inconspicious architectural solution for new or retrofit applications and egress compliance opportunities.

SCAN QR CODE or visit our web site for additional technical information, product specification sheets, downloads, instructions, and system configuration guides. **wagnerarchitectural.com**

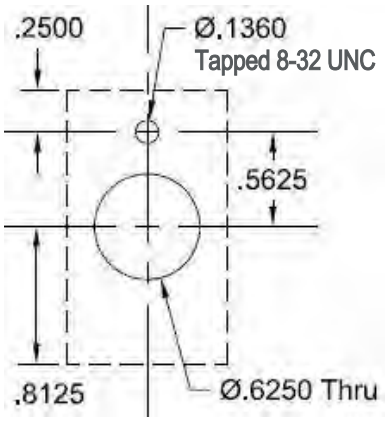

MOUNTING PATTERN

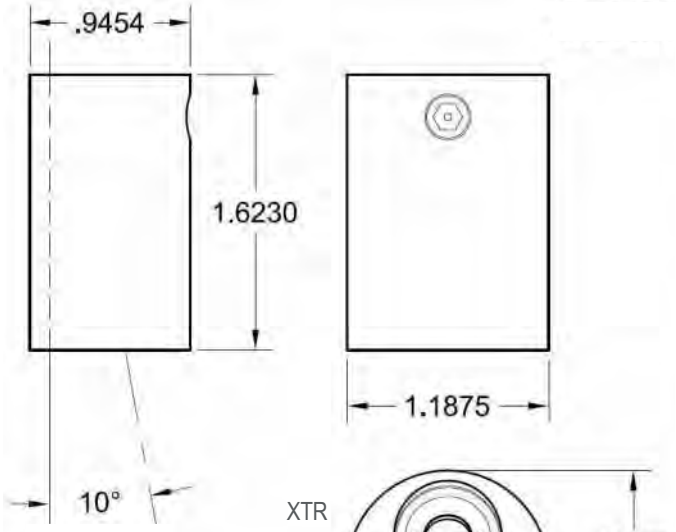

BANTAM QUANTITY & DISTANCE SPECIFICATION SAMPLE	
BANTAM QTY	34
TOTAL CONDUCTOR LENGTH	80'
BANTAM QTY	24
TOTAL CONDUCTOR LENGTH	125'
BANTAM QTY	20
TOTAL CONDUCTOR LENGTH	140'

SUITABLE VALUES FOR 100W, 24VDC @ 500mA DRIVE CURRENT, A 20 FOOT REMOTE DISTANCE:

- Bantams with 7 foot intermediate conductors with our 100W standard driver
- Intermediate conductors can be 18 or 16 AWG

Actual distances will vary depending on the total load, drive current, wire guage and fixture spacing.

Verify all distance caculations with overall design of system. Conductor supply and guage specification by others.

XTR

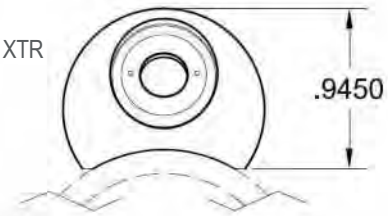

BANTAM IS AVAILABLE WITH A RADIUSED BACK (XTR) FOR 1.66" AND 1.90" POST MOUNTING OR WITH A FLAT BACK (XTF) FOR SQUARE POST OR WALL MOUNTING

XTF

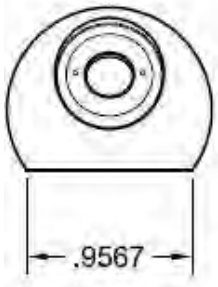

© 2018 R&B WAGNER, INC
WAGNERARCHITECTURAL.COM
LUSY GUIDE R1

DESIGN SPECIFICATIONS
LUMENRAIL SYSTEM POWER COMPONENTS

Wagner offers multiple ETL listed options for both 24VDC power supplies and NEMA enclosures. Quantities and types will be configured based on your specifications and design.

- Additional specification options are available by request.
- Not all options apply to all products, please verify compatibility with the factory.

CLASS II DRIVERS:
- STD 100W Dimming
- Dali, DMX, 0-10V Dimming Protocols
- Made in USA Units Available

LUMENPOST™:
- Integrated 100W, 0-10V DIM

4X NEMA ENCLOSURES:
- Molded Polycarbonate
- Painted Steel
- Stainless Steel

OPTIONS:
- Fusing
- Surge Protection

SCAN QR CODE for technical information, downloads, instructions, and system configuration guides

LUMENRAIL SYSTEM WIRING

Most Lumenrail® Fixtures can be specified with any of our post or wall mounting options.

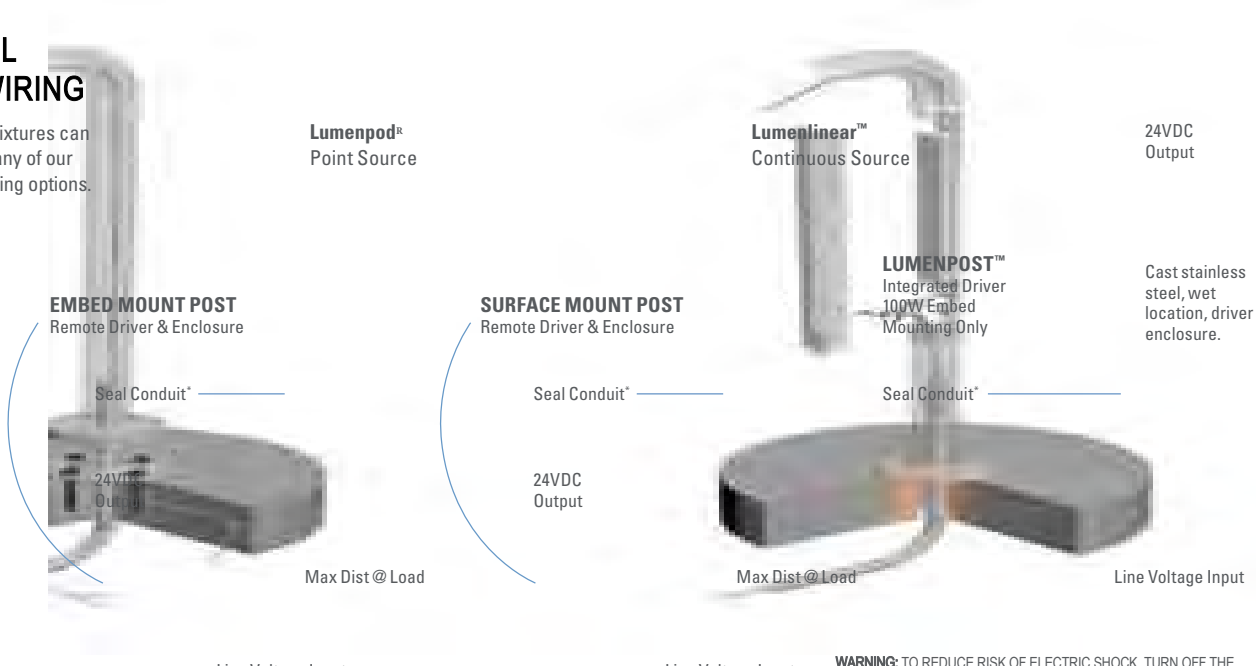

WARNING: TO REDUCE RISK OF ELECTRIC SHOCK, TURN OFF THE ELECTRICAL SUPPLY BEFORE INSTALLING OR SERVICING THE LIGHT FIXTURES AND DRIVER. FAILURE TO DO SO MAY RESULT IN SERIOUS INJURY AND/OR DAMAGE TO THE COMPONENTS.

*Seal conduit with RTV or silicone, prior to rail installation, to prevent moisture intrusion.

MAXIMUM REMOTE DISTANCE - 100W / 24VDC DRIVER					
Fixture Type	**10AWG**	**12AWG**	**14AWG**	**16AWG**	**18AWG**
Lumenlinear™	120′	71′	46′	29′	18′
Lumenpod™	—	—	—	134′	80′
Bantam™	—	—	—	152′	98′

Actual distances may vary depending on the total load, DC/DC current and fixture spacing. Verify all distance calculations with overall design of system. Conductor supply and project gauge specification by others.

WALL MOUNT
24VDC input from remote driver

It is recommended that use of a Wall Grommet, SpeedPort or equal, is employed to protect the conductors through the wall material.

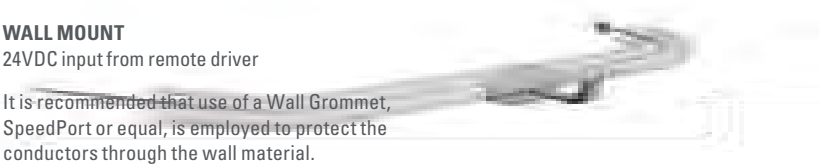

© 2018 R&B WAGNER, INC
WAGNERARCHITECTURAL.COM
LUSY GUIDE R1

DESIGN SPECIFICATIONS
LUMENRAIL

HANDRAILS AND GUARDS

Defined by building codes, handrails are in place to provide guidance while the purpose of a guard is to prevent accidental falls.

Handrails are located between 34" and 38" and have dimensional limitations for graspability. Most codes and standards limit handrail size to be between 11/4" and 2" in diameter or provide equivalent graspability.
Guards are generally required for ramps, stairs or landings above 30". The height will vary depending on the code.

Commercial codes commonly require a guard to be a minimum of 42" in height, while residential codes only require a guard to be a minimum of 36" in height. Always confirm these dimensions with your local code authorities.

If a 42" guard is called for on a stair or ramp, it will also require a handrail at the appropriate height. Guards also have opening limitations to consider. The most common requirement is that no opening be large enough to allow a 4" sphere to pass.



This specification guide has been developed to assist with the understanding, nomenclature and design development of Lumenrail illuminated hand rail systems. Our fabricated solutions are constructed from architectural grade materials with industry best fit and finishing. Each installation is custom engineered to adhere to building codes through structural and design requirements. Use this guide to select the construction details for your project and aesthetic requirements.

JUNCTIONS & CHANGES IN DIRECTION



MPT $

WELDED OR MECHANICAL POST TOP
Cast and machined 316 stainless steel post top necks down for a sleek connection.



CPT $$$

COPED & WELDED POST TOP
Coped post continiously seam welded to rail for a uniform presence



$

ROTARY BEND CORNER
Continuous pipe from rail to post, mechanically bent for smooth transition.



$$$

WELDED MITER CORNER
Machined angled segments fused with a blended seam weld.

MATERIAL

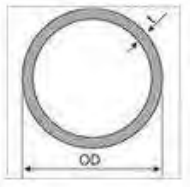

1.50" 0.120" Wall, 316 Stainless Steel	15S	$
1.66" Schedule 40, 316 Stainless Steel	16S	$
1.90" Schedule 40, 316 Stainless Steel	19S	$
1.66" Schedule 40, 6063 Aluminum (Wall Mount Only)	16A	$
1.90" Schedule 40, 6063 Aluminum	19A	$

FINISHES

Stainless Steel	Satin Brushed, #4 Circumferential	4CS	$
	Satin Brushed, #4 Longitudinal	4LS	$$
	Brite Polished #7 Mirror-Like	7PS	$$$
Aluminum	Satin Brushed #4 With:		
	Anodized Clear Silver	4CA	$
	Anodized Deep Bronze	4BA	$

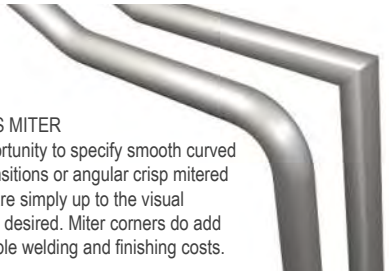

BEND VS MITER
The opportunity to specify smooth curved bend transitions or angular crisp mitered corners are simply up to the visual presence desired. Miter corners do add appreciable welding and finishing costs.

© 2018 R&B WAGNER, INC

DESIGN SPECIFICATIONS
LUMENRAIL

HANDRAIL LWM -
Lumenrail wall mount

Lumenrail is also available for mounting to guardrail, glass and post systems by others. Contact your local agent for details.

BRACKETS AND WIRING



SBK $

STANDARD WALL BRACKET
Solid stainless steel bar arm, welded flange with snap cover, mechanical or weld saddle for structural simplicity.



CBK $$$

CUSTOM WALL BRACKET
Solid stainless steel construction per specified design, structural certification requires additional testing charges.

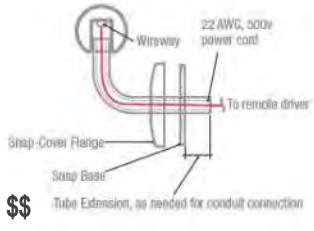

WBK $$

WIREWAY WALL BRACKET
Heavy wall tube stainless steel arm, welded flange with snap cover, mechanical or weld saddle for structural simplicity.

RTW $

RETURN TOWARD WALL
Typical return bend at the end of the wall mount hand rail assembly. Return allows for wire entry. It is recommended that use of a Wall Grommet, SpeedPort or equal, is employed to protect the conductors through the wall material.

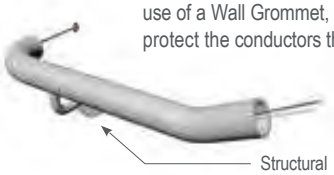

Structural blocking, by others, is typically required to meet code.

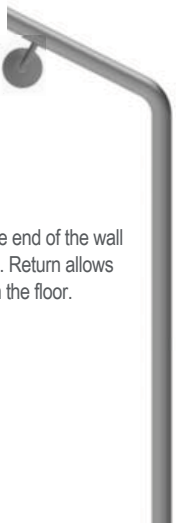

BRG $

RETURN TO GROUND
Optional return bend at the end of the wall mount hand rail assembly. Return allows for conduit wire entry from the floor.

WALL & GUARD MOUNT ASSEMBLY EXAMPLES

Wall mount, 1.66" ss with standard bracket required top extension, return toward wall, bottom, bend return to ground.

LWM-16S-SBK-RTW-BRG-4CS

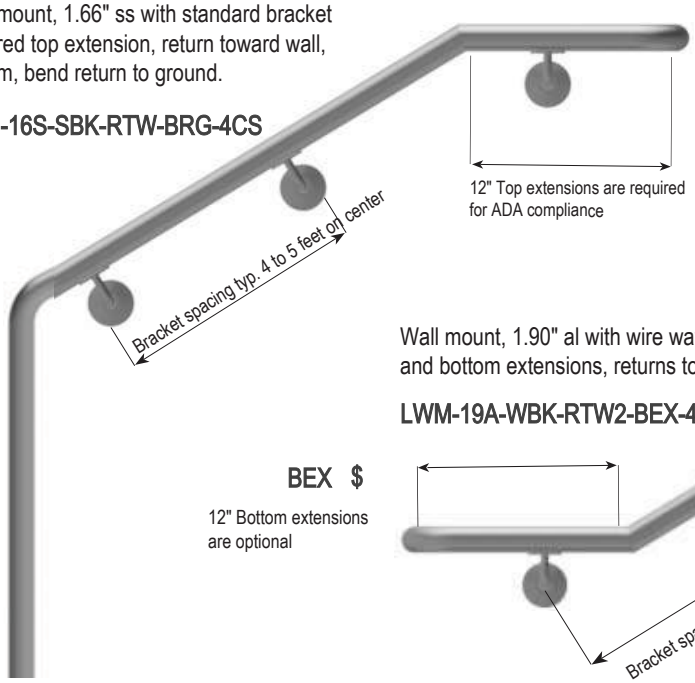

Wall mount, 1.90" al with wire way bracket, top and bottom extensions, returns toward wall.

LWM-19A-WBK-RTW2-BEX-4CA

BEX $

12" Bottom extensions are optional

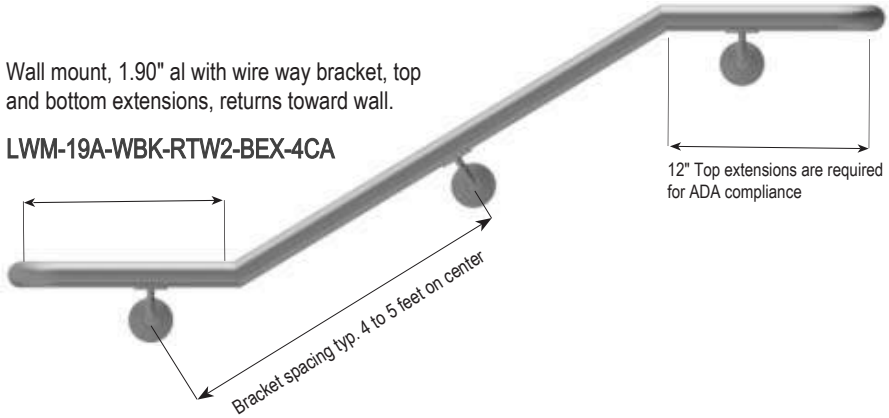

WAGNER ARCHITECTURAL SYSTEMS
888.243.6914 // SYSTEMS@MAILWAGNER.COM
10600 West Brown Deer Road // Milwaukee, WI 53224, USA

© 2018 R&B WAGNER, INC

DESIGN SPECIFICATIONS
LUMENRAIL

POST MOUNTED HANDRAIL

LPM - luxrail post mount

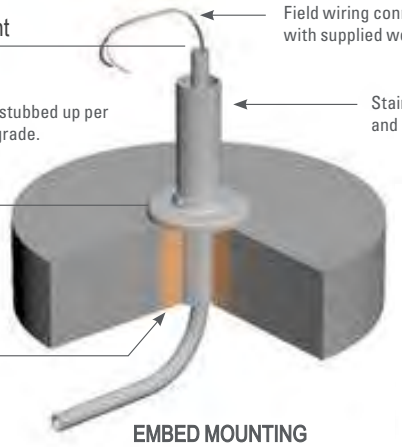

Field wiring connects to system components with supplied wet location wire nuts.

½" electrical conduit (max) stubbed up per code requirements, above grade.

Stainless steel internal sleeve standard in 1.66" and 1.50" posts to meet IBC load requirements.

Embed mounting (min 6" or specify deeper) anchored with Rockite®, Kwixset® or equal.

EZ Sleeves, for poured hole locations, are available from shopwagner.com Item # **EZ3006-10**

EMBED MOUNTING
EBM $

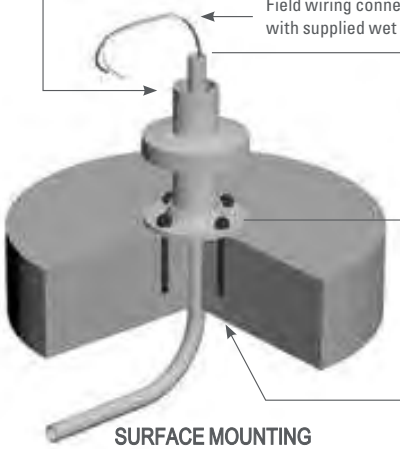

Field wiring connects to system components with supplied wet location wire nuts.

½" electrical conduit (max) stubbed up per code requirements, above grade.

Surface mount hardware supplied by others, per code requirements.

SURFACE MOUNTING
SFM $

IDP $$

INTEGRATED DRIVER POST OPTION
Cast stainless in-post enclosure can be combined with most post return design options.



24VDC Output

LUMENPOST™
Integrated Driver
100W Embed
Mounting Only

Cast stainless steel, wet location, driver enclosure.

Seal Conduit®

REMOTE DRIVER STANDARD



POST RETURN OPTIONS



BRG $
Bend Return to Ground



RLR $$
Round Loop Return to Post



SEG $$
7 Bend Extension Return to Ground Aluminum 1.9 only

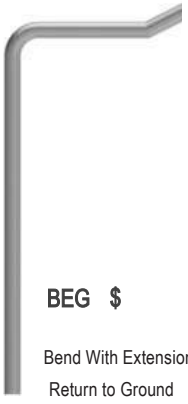

BEG $
Bend With Extension Return to Ground



SLR $$
Square Loop Return to Post



MLR $$$
Mitered Loop Return to Post

© 2018 R&B WAGNER, INC
WAGNERARCHITECTURAL.COM
LUSY GUIDE R1

DESIGN SPECIFICATIONS
LUMENRAIL

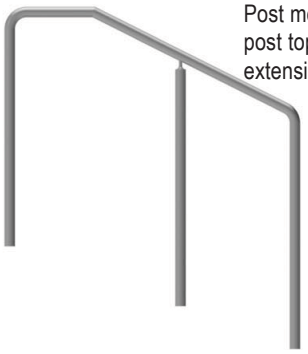

Post mount, 1.90" ss with embed mount, machined post tops, bend returns to ground with required top extension.

LPM-19S-EBM-MPT-ERG-4CS $

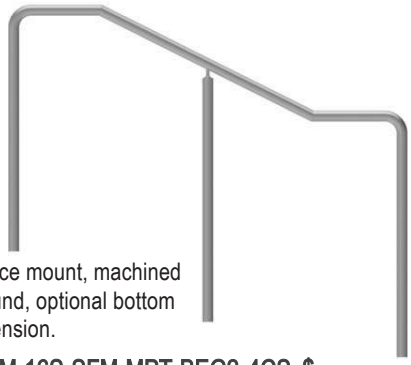

Post mount, 1.66" ss with surface mount, machined post tops, bend returns to ground, optional bottom extension with required top extension.

LPM-16S-SFM-MPT-BEG2-4CS $

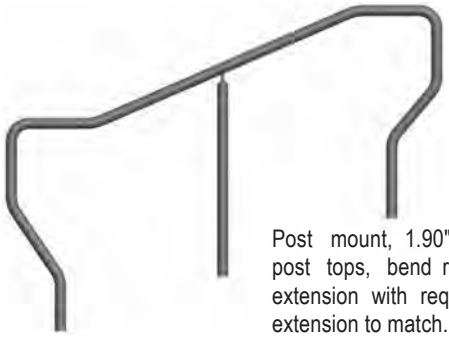

Post mount, 1.90" al with embed mount, machined post tops, bend returns to ground, optional bottom 7 extension with required top extension, specified as 7 extension to match.

LPM-19A-EMB-MPT-SEG2-4CA $$

12" Top extensions are required for ADA compliance

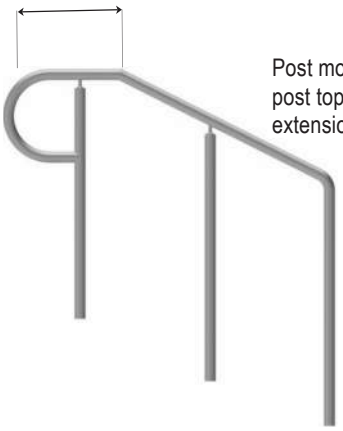

Post mount, 1.66" ss with surface mount, machined post tops, bend return to ground with required top extension, round loop extension specified.

LPM-16S-SFM-MPT-RLR-4LS $$

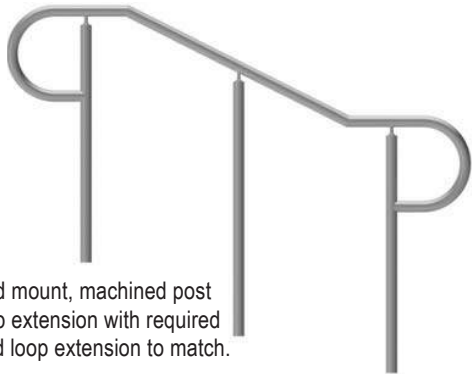

Post mount, 1.90" ss with embed mount, machined post tops, optional bottom round loop extension with required top extension, specified as round loop extension to match.

LPM-19S-EBM-MPT-RLR2-4CS $$

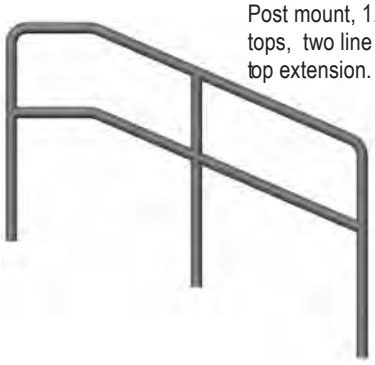

Post mount, 1.66" ss with surface mount, coped post tops, two line rail, bend returns to ground with required top extension.

LPM-16S-SFM-CPT-TLR-BRG-4CS $$$

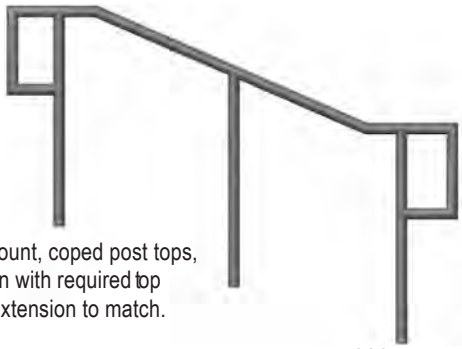

Post mount, 1.90" al with embed mount, coped post tops, optional bottom miter loop extension with required top extension, specified as miter loop extension to match.

LPM-19A-EBM-CPT-MLR2-4BA $$$

© 2018 R&B WAGNER, INC

DESIGN SPECIFICATIONS
LUMENRAIL

WALL & GUARD MOUNT ASSEMBLY SUFFIX EXAMPLES

R1	LWM	16S	SWB	RTW	BRG	4CS

TYPE
This field should be used to identify the rail through a lighting fixture schedule or site location on the construction drawings.

WALL
Lumenail wall or guard mount assemblies.

MATERIAL
Stainless Steel
15S - 1.50" X 0.120" wall, 316 stainless

16S - 1.66" schedule 40, 316 stainless

19S - 1.90" schedule 40, 316 stainless

Aluminum
16A - 1.66" schedule 40,6063 Aluminum (Wall Mount Only)

19A - 1.90" schedule 40, 6063 Aluminum

BRACKET
SBK - Standard wall bracket, solid stainless steel bar arm, welded flange with snap cover, mechanical or weld saddle for structural simplicity.

WBK - Wire-way wall bracket, heavy wall tube stainless steel arm, welded flange with snap cover, mechanical or weld saddle for structural simplicity.

CBK - Custom wall bracket, solid stainless steel construction per specified design, structural certification requires additional testing charges.

TOP RETURN
12" Top extensions are required for ADA compliance

RTW - Return bend toward the wall at the end of the hand rail assembly.

TRG -Top return to ground, optional return bend at the end of the wall mount hand rail assembly.

BOTTOM RETURN
RTW - Return bend toward the wall at the end of the hand rail assembly.

BRG -Bottom return to ground, optional return bend at the end of the wall mount hand rail assembly.

BEX - 12" Bottom extensions are optional

FINISH
Stainless Steel
4CS -Satin Brushed, #4 Circumferential
4LS -Satin Brushed, #4 Longitudinal
7PS -Polished #7 Mirror-like

Aluminum
4CA -Satin Brushed, #4 Anodized Clear
4BA -Satin Brushed, #4 Anodized Bronze

PLEASE NOTE:
Due to fabrication processes, color variation will be visible through anodized finishes.

Indicates duplicate return treatments, top & bottom

POSTMOUNTASSEMBLY SUFFIX EXAMPLES

R2	LPM	19S	EMB	RTW	BRG2	4LS

TYPE
This field should be used to identify the rail through a lighting fixture schedule or site location on the construction drawings.

POST
Lumenrail post mount assemblies.

MATERIAL
Stainless Steel
15S - 1.50" X 0.120" wall, 316 stainless (Embed Only)

16S - 1.66" schedule 40, 316 stainless

19S - 1.90" schedule 40, 316 stainless

Aluminum
19A - 1.90" schedule 40, 6063 Aluminum

MOUNTING
EMB - Embed mounting (min 6" or specify deeper) anchored with Rockite®, Kwixset® or equal. ½" electrical conduit (max) stubbed up per code requirements, above grade. Stainless steel internal sleeve standard in 1.66" and 1.50" posts to meet IBC load requirements.

SFM - Surface mounting, hardware supplied by others, per code requirements. ½" electrical conduit (max) stubbed up per code requirements, above grade. Stainless steel internal sleeve standard in 1.66" and 1.50" posts to meet IBC load requirements.

POST TOP
MPT- Cast and machined 316 stainless steel post top necks down for a sleek connection.

CPT -Coped post continuously seam welded to rail for a uniform presence.

TOP/BOTTOM RETURN
12" Top extensions are required for ADA compliance

BRG-Bend return to ground.

SEG- 7 Bend return to ground.

RLR-Round loop return to post.

SLR -Square loop return to post.

MLR-Mitered loop return to post.

BEG-Bend extension (bottom)return to ground.

FINISH
Stainless Steel
4CS -Satin Brushed, #4 Circumferential
4LS -Satin Brushed, #4 Longitudinal
7PS -Polished #7 Mirror-like

Aluminum
4CA -Satin Brushed, #4 Anodized Clear
4BA -Satin Brushed, #4 Anodized Bronze

PLEASE NOTE:
Due to fabrication processes, color variation will be visible through anodized finishes.

© 2018 R&B WAGNER, INC

DESIGN SPECIFICATIONS
LUMENRAIL™

YS6
Lam Partners
ARCHITECTURAL LIGHTING DESIGN

WALL & GUARD MOUNT ASSEMBLY SUFFIXES

TYPE	WALL	MATERIAL	BRACKET	TOP RETURN	BOTTOM RETURN	FINISH
This field should be used to identify the rail through a lighting fixture schedule or site location on the construction drawings.	Lumenail wall or guard mount assemblies.	**Stainless Steel** **15S -** 1.50" X 0.120" wall, 316 stainless **16S -** 1.66" schedule 40, 316 stainless **19S -** 1.90" schedule 40, 316 stainless **Aluminum** **16A -** 1.66" schedule 40,6063 Aluminum (Wall Mount Only) **19A -** 1.90" schedule 40, 6063 Aluminum	**SBK** - Standard wall bracket, solid stainless steel bar arm, welded flange with snap cover, mechanical or weld saddle for structural simplicity. **WBK** - Wire-way wall bracket, heavy wall tube stainless steel arm, welded flange with snap cover, mechanical or weld saddle for structural simplicity. **CBK** - Custom wall bracket, solid stainless steel construction per specified design, structural certification requires additional testing charges.	12" Top extensions are required for ADA compliance **RTW -** Return bend toward the wall at the end of the hand rail assembly. **TRG -** Top return to ground, optional return bend at the end of the wall mount hand rail assembly.	**RTW -** Return bend toward the wall at the end of the hand rail assembly. **BRG -** Bottom return to ground, optional return bend at the end of the wall mount hand rail assembly. **BEX** - 12" Bottom extensions are optional	**Stainless Steel** **4CS** -Satin Brushed, #4 Circumferential **4LS** -Satin Brushed, #4 Longitudinal **7PS** -Polished #7 Mirror-like **Aluminum** **4CA** -Satin Brushed, #4 Anodized Clear **4BA** -Satin Brushed, #4 Anodized Bronze **PLEASE NOTE:** Due to fabrication processes, color variation will be visible through anodized finishes.

POST MOUNT ASSEMBLY SUFFIXES

TYPE	POST	MATERIAL	MOUNTING	POST TOP	TOP/BOTTOM RETURN	FINISH
This field should be used to identify the rail through a lighting fixture schedule or site location on the construction drawings.	Lumenrail post mount assemblies.	**Stainless Steel** **15S -** 1.50" X 0.120" wall, 316 stainless (Embed Only) **16S -** 1.66" schedule 40, 316 stainless **19S -** 1.90" schedule 40, 316 stainless **Aluminum** **19A -** 1.90" schedule 40, 6063 Aluminum	**EMB** - Embed mounting (min 6" or specify deeper) anchored with Rockite®, Kwixset® or equal. ½" electrical conduit (max) stubbed up per code requirements, above grade. Stainless steel internal sleeve standard in 1.66" and 1.50" posts to meet IBC load requirements. **SFM** - Surface mounting, hardware supplied by others, per code requirements. ½" electrical conduit (max) stubbed up per code requirements, above grade. Stainless steel internal sleeve standard in 1.66" and 1.50" posts to meet IBC load requirements.	**MPT -** Cast and machined 316 stainless steel post top necks down for a sleek connection. **CPT -** Coped post continuously seam welded to rail for a uniform presence.	12" Top extensions are required for ADA compliance **BRG -** Bend return to ground. **SEG -** 7 Bend return to ground. **RLR -** Round loop return to post. **SLR -** Square loop return to post. **MLR -** Mitered loop return to post. **BEG -** Bend extension (bottom)return to ground.	**Stainless Steel** **4CS** -Satin Brushed, #4 Circumferential **4LS** -Satin Brushed, #4 Longitudinal **7PS** -Polished #7 Mirror-like **Aluminum** **4CA** -Satin Brushed, #4 Anodized Clear **4BA** -Satin Brushed, #4 Anodized Bronze **PLEASE NOTE:** Due to fabrication processes, color variation will be visible through anodized finishes.

© 2018 R&B WAGNER, INC
WAGNERARCHITECTURAL.COM
LUSY GUIDE R1

STAIR AND RAMP MEASURING SHEET
LUMENRAIL

* It is recommended that a professional hand rail installer be involved in planning and installation of custom fabricated handrails.

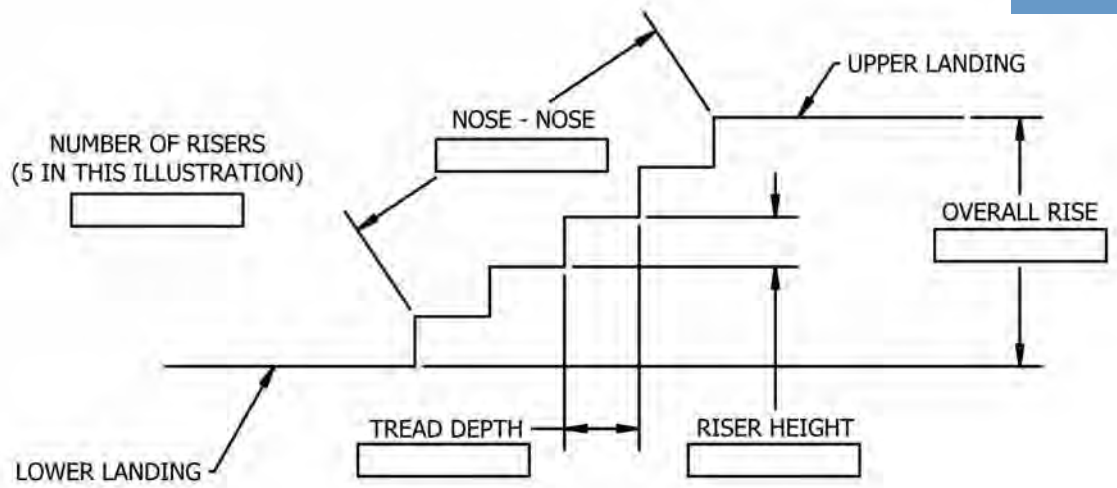

STAIR INFORMATION

1) Make a complete sketch of the stairs with correct number of tread and risers.
2) Measure the nose to nose and overall rise of the stairs. These are the most critical dimensions for Wagner.
3) Measure all of the other dimensions if possible, including individual tread depth and riser height for each step. Any additional measurements are helpful.

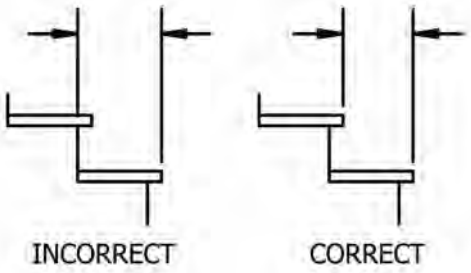

CORRECT MEASURING OF TREAD

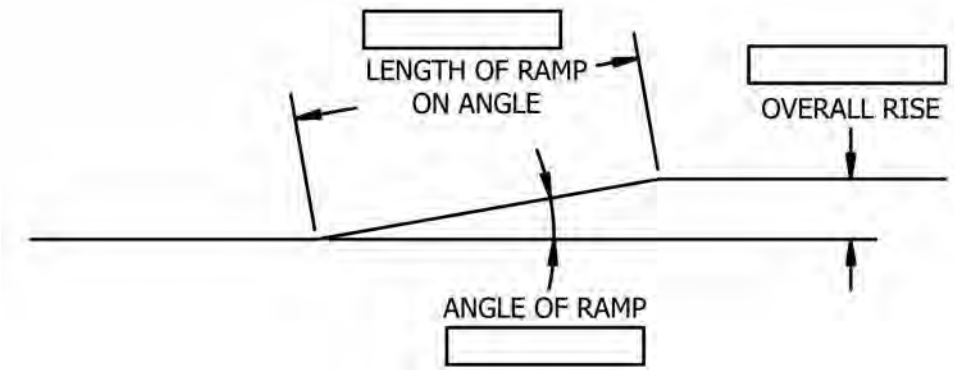

RAMP INFORMATION

1) Make a complete sketch of the ramp.
2) Measure the length of ramp on angle and overall rise of ramp. These are the most critical dimensions for Wagner.
3) Measure angle of ramp if possible. Any additional measurments are helpful

© 2018 R&B WAGNER, INC
WAGNERARCHITECTURAL.COM
LUSY GUIDE R1

YS6
Lam Partners
ARCHITECTURAL LIGHTING DESIGN

LUMENRAIL. LIGHTS YOUR WAY

MARRIOT MARQUIS
SAN DIEGO MARINA
SAN DIEGO, CA
ARCHITECT: TVSDESIGN

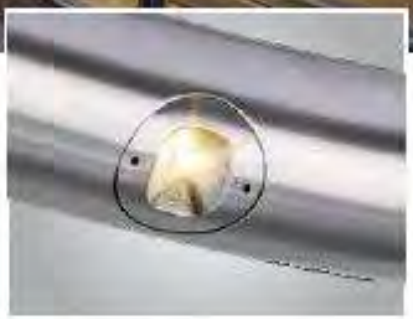

LUMENPOD®28

The evolution of the handrail point source from Wagner Architectural Systems has performance that leverages the latest LED technology and manufacturing techniques. This USA engineered and manufactured luminaire is designed for pathway, stair and ramp illumination.

The Lumenpod 28 provides a flush-profile architectural solution with push-in installation. Let us help you make a great entrance.

888.243.6914
SYSTEMS@MAILWAGNER.COM
WAGNERARCHITECTURAL.COM

WAGNER
ARCHITECTURAL SYSTEMS

PHOTO ©WAYNE CABLE 2016 | ©2016 F&B WAGNER, INC. | ALL RIGHTS RESERVED

NEW *Featuring Tegan's Exclusive "Powerspan Cable"*

YS7

Lam Partners
ARCHITECTURAL LIGHTING DESIGN



Exton Powerspan Cable System

Kore-EX5 IP65 Powe
Pendant with “G” Envelope

Remote Power Supply: The Exton System is designed for use with a Remote Power Supply Enclosure and Driver. Refer to Exton Power Supply IP20 Specsheet, IP24 Specsheet or IP66 Specsheet for details. Use of Tegan Lighting Power Enclosures and Drivers only. If supplied “by others” the warranty and listing are void.

Envelopes: “G” (Globe) Glass Envelope Frosted, “G” (Globe) Glass Envelope Silver Bowl, “G” (Globe) Glass Envelope Copper Bowl.

Accessories: Exton Sandblasted Lens (EX5-SBL), Exton Solite Lens (EX5-SOL), Exton Honeycomb Louver 16 - Black (EX-HCLB-BLK), 22K Color Correction Filter (CCT-22K), 24K Color Correction Filter (CCT-24K), Honeycomb Louver 16 - Black (HCLB-16). **Note:** CCT22/24 = Kelvin Temperature results when used with the standard 27K Cree LED.

Engineering: Due to mathematical laws, tightening and loading any taut end-supported flexible cable puts tensile loads upon its supports (walls, trees, posts, etc.) that is orders of magnitude greater than the weight of the cable and its dynamic loading. Taut/tensioned installations require extremely strong end supports, and it is up to the Structural Engineer/specifier and installer to match the strength of the end support structures with the combined level of tautness and static (weight of cable/fixtures) and dynamic (e.g. wind/ice/vermin) load of the cable. Refer to Installation Instructions for details.

Installation: Exton is not approved or listed for indoor pool/sauna installations. Refer to Installation Instructions #23 for details. For system layout, and specification assistance, refer to the Exton Application Guide for details.

Labels: ETL Listed; Tested to UL 2108 Low Voltage Lighting Systems. In a continuing effort to offer the best product possible we reserve the right to change, without notice, specifications or materials. Technical specification sheets that appear on teganlighting.com are the most recent version and supersede all other versions that exist in any other printed or electronic form. Kore-EX5 Module and Powerspan Cable - 3 year warranty. Envelopes: limited three year warranty. Refer to Exton Application Guide for details. Consult with an Arborist for proper tree installation per the type of tree(s). Tegan Lighting is not liable for any damage/injury as a result of tree installation. Refer to Installation Instructions for more details.

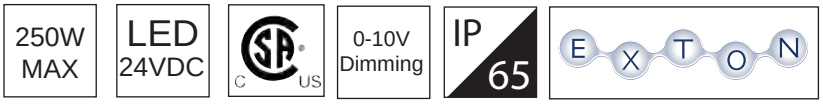

Exton Powerspan Cable System

Exton - Powerspan Cable

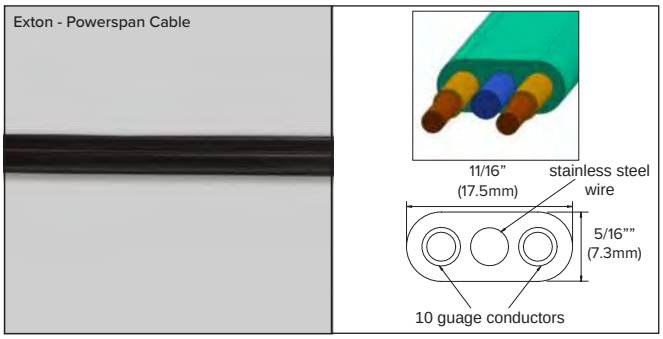

Exton - Powerspan Cable - Black (EX-C-BLK)

Exton Self-Sealing Powerspan Cable is IP-65 for interior/exterior applications. Order in 1’ (30.5cm) increments. Exton Powerspan Cable contains two #10 AWG stranded copper conductors alongside a central strand of steel support cable. Field cuttable. 24VDC at 250W Max. per run. Polarity does not matter. Available in Black finish (only). Refer to Installation Instructions Sheet and Exton Application Guide for details.

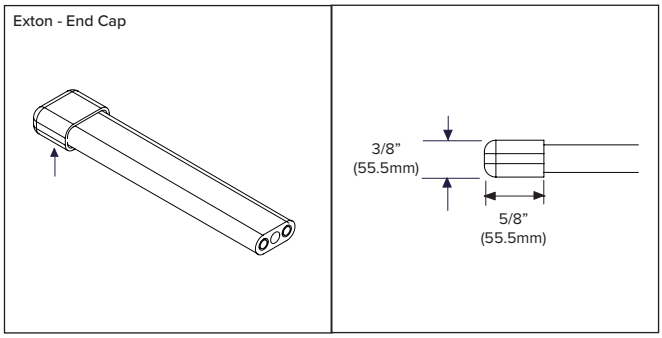

Exton End Cap - Black Finish (EX-EC-BLK)

Exton End Cap is for interior/exterior applications. One (1) required per run. Available in Black finish (only). Refer to Installation Instructions Sheet and Exton Application Guide for details.

Exton - Cable - Mounting Brackets

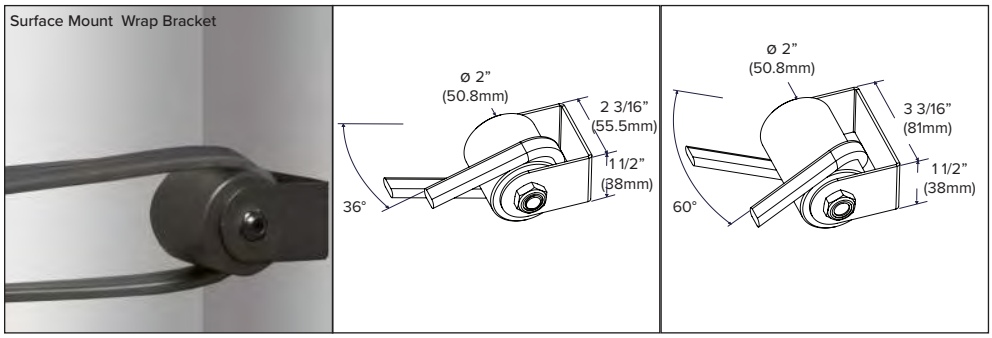

Surface Mount 2” Wrap Bracket, Black (EX-SWB-2-BLK)
Surface Mount 3” Wrap Bracket, Black (EX-SWB-3-BLK)

Surface Mount Wrap Bracket, 2 3/16” (55.5mm) or 3 3/16” (81mm), for Exton Powerspan Cable mounting to any suitable surface; wall, tree, pole, beam, etc. to continue up to a 110’ (33.5m) run. 250W per run. Available in anodized Black (BLK) finish. Can be field painted or contact factory for custom colors. Hardware provided by others. Use fasteners as per the specification of a licensed structural engineer for the mounting substrate. Refer to Installation Instructions Sheet and Exton Application Guide for details. Refer to page one for mounting Exton Brackets to Pole(s).

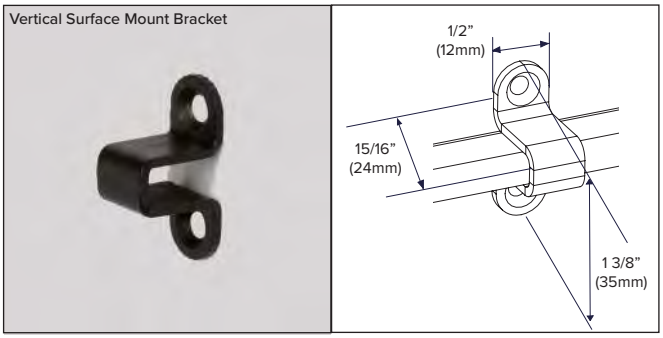

Vertical Surface Mount Bracket, Black (EX-VSB-BLK)

Vertical Surface Mount Bracket for Exton Powerspan Cable can be mounted to any suitable surface; wall, tree, pole, beam, etc. Use with Standoff Bracket if an EX5 module will be positioned cloes to the mounting surface, use Standoff Brackets as needed to allow room for the module and the cable clamp. Available in anodized Black (BLK) finish. Can be field painted or contact factory for custom colors. Hardware provided by others. Use fasteners as per the specification of a licensed structural engineer for the mounting substrate. Refer to Installation Instructions Sheet and Exton Application Guide for details. Refer to page one for mounting Exton Brackets to Pole(s).

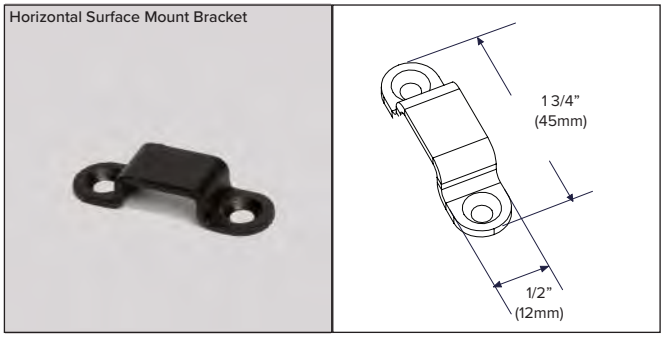

Horizontal Surface Mount Bracket, Black (EX-HSMB-BLK)

Horizontal Surface Mount Bracket for Exton Powerspan Cable can be mounted to any suitable surface; wall, tree, pole, beam, etc. Use with Standoff Bracket if an EX5 module will be positioned close to the mounting surface, use Standoff Brackets as needed to allow room for the module and the cable clamp. Available in anodized Black (BLK). Can be field painted or contact factory for custom colors. Hardware provided by others. Use fasteners as per the specification of a licensed structural engineer for the mounting substrate. Refer to Installation Instructions Sheet and Exton Application Guide for details. Refer to page one for mounting Exton Brackets to Pole(s).

Exton Powerspan Cable System

Exton - Cable - Mounting Brackets

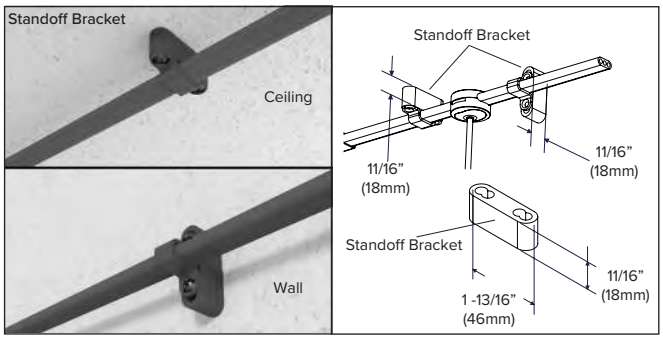

Standoff Bracket, Black (EX-SOBR-BLK)

Standoff to be used with Vertical or Horizontal Surface Mount Brackets to allow room for the EX5 module and the cable clamp when the module is positioned close to the mounting surface. Available in Black (BLK). Hardware provided by others. Use fasteners as per the specification of a licensed structural engineer for the mounting substrate. Refer to Installation Instructions Sheet and Exton Application Guide for details.

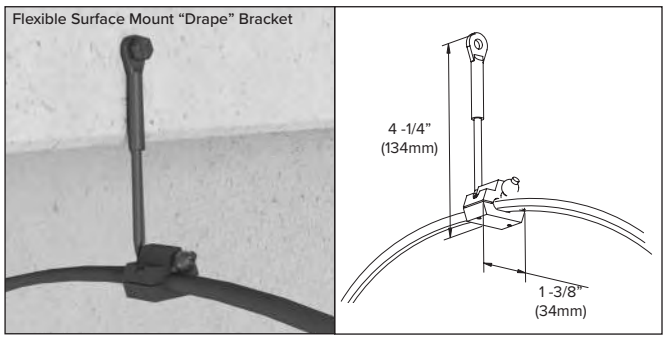

Flexible Surface Mount “Drape” Bracket, Black (EX-FSDB-BLK)

Flexible Surface Mount Bracket for Exton Powerspan Cable “Draped” installations. Can mount to any suitable surface; wall, tree, pole, beam, etc. 4.25” (115mm) AC length. Contact factory for alternative lengths. Stainless steel and Black anodized aluminum. Hardware provided by others. Use fasteners as per the specification of a licensed structural engineer for the mounting substrate. Refer to Installation Instructions Sheet and Exton Application Guide for details. Refer to page one for mounting Exton Brackets to Pole(s).

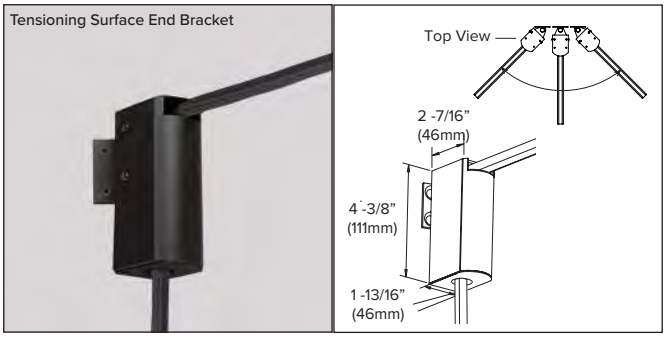

Tensioning Surface End Bracket, Black (EX-TSEB-BLK)

Tensioning Surface End Bracket for Exton Powerspan Cable installations. Can be mounted to any suitable surface; wall, tree, pole, beam, etc. 25° Horizontal side adjustment. Two Tensioning brackets required per tensioned run. Brackets can be installed side-by-side for multiple runs. Tension Mount Brackets can hold Powerspan Cable so it angles at up to 45° away from perpendicular, for a total adjustability of 90° left and right. The Tension Mount Bracket can be used in tensioned or loose “swagged” installations. Available in anodized Black (BLK) finish. Can be field painted or contact factory for custom colors. Hardware provided by others. Use fasteners as per the specification of a licensed structural engineer for the mounting substrate. Refer to Installation Instructions Sheet and Exton Application Guide for details.

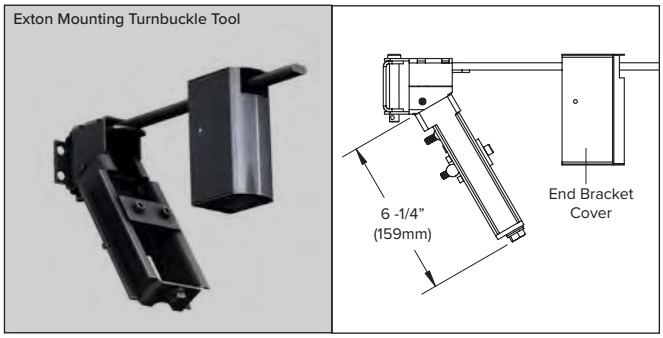

Exton Mounting Turnbuckle Tool (EX-MTBT-BLK)

The Turnbuckle Tool’s Sliding Clamp is used to incrementally pull and make the Powerspan Cable taught. Tighten cable by manually pulling it through the End Mount before using the Tool. The Tensioning Tool should only be used to taughten away the last few inches off swag. Be sure to loosen the End Mount Screws before using the Bolt, or you may damage the cable. Allow 6” of sag in the middle of the Powerspan Cable per 20’ of span. For example, 40’ of span (2 x 20’) requires 2 x 6” (12”) of sag. Keeping it tighter may create higher tension than the cable can withstand. Do not exceed 450 lbs of tension. Use provided tensioning device if necessary. Maximum Span: 110’ (33” sag). Maximum # of LED Modules per Run/Circuit: 40. Maximum Shade weight: 5lb.

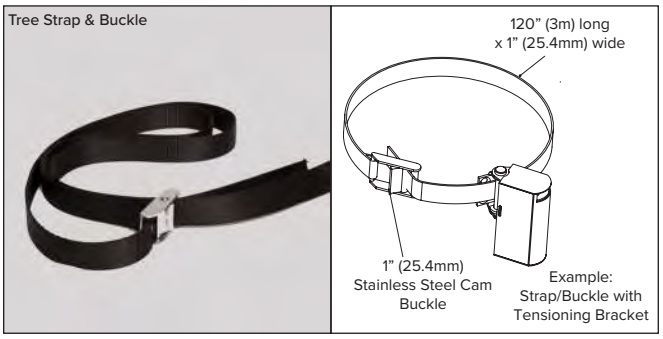

Tree Strap & Buckle (EX-10-TSB)

Tree Strap & Buckle Bracket for Exton Powerspan Cable mounting to a tree. 1500 lb. test, UV-resistant, water-resistant. Field-cuttable. 10’ (3m) Strap length; contact factory for alternative strap lengths over 10’ in 1’ increments. Strap available in Black (BLK) finish (only). Galvanized Stainless Steel buckle (only). Tensioning Bracket shown is ordered separately. Refer to Installation Instructions Sheet and Exton Application Guide for details.

Exton Powerspan Cable System

Exton - Cable - Power Feed

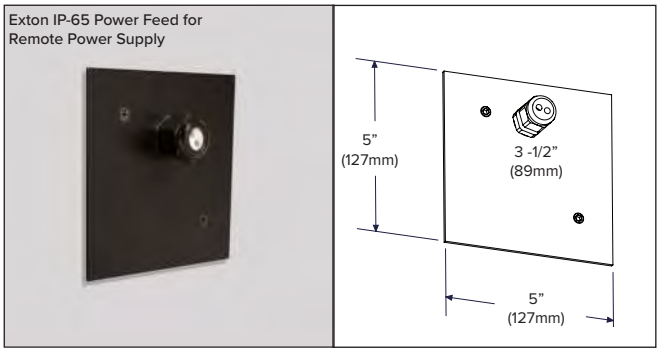

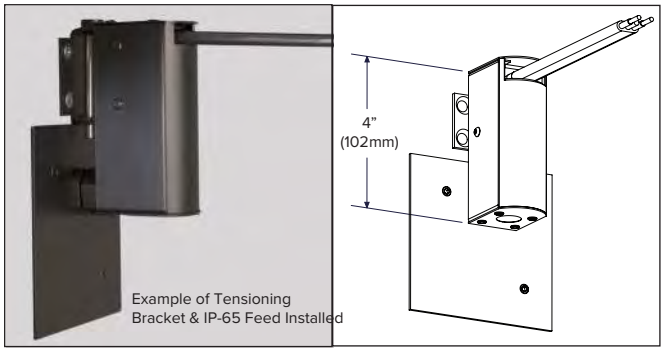

Exton IP-65 Power Feed for Remote Power Supply (EX-PF-BLK)

The IP-65 Power Feed will allow the Exton Power Cable to feed into a building or Pole for connection to a Remote Power Supply. The Power Feed is not structural. It is for feeding wire (only) into a building, pole, etc. to make an electrical connection. It can not be used alone for tensioning/swag mounting. Field-paintable. Can mount to a building structure or pole. Available in Black (BLK) finish. Contact factory for custom colors (backplate only). **Tensioning Bracket shown is ordered separately**. Remote Power Supply; refer to Specification Sheet 24 for options. Refer to Installation Instructions Sheet and Exton Application Guide for details.

Exton Powerspan Cable System

Exton - Glass Envelope - Globe “G” Type

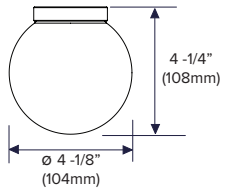

“G” Glass Envelope, Frosted
Hand Blown, Globe (G) Shape, Frosted Glass Envelope for Kore-EX5.

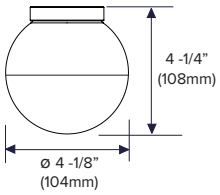

“G” Glass Envelope, Silver/Copper Bowl
Hand Blown, Globe (G) Shape,Glass Silver/Copper Bowl for Kore-EX5.

1. Contact Factory for a alternative color options. Refer to page 1 for minimum units.

Exton - Cable - Kore-EX5 24VDC Pendant with “G” Glass Envelope - Combinations

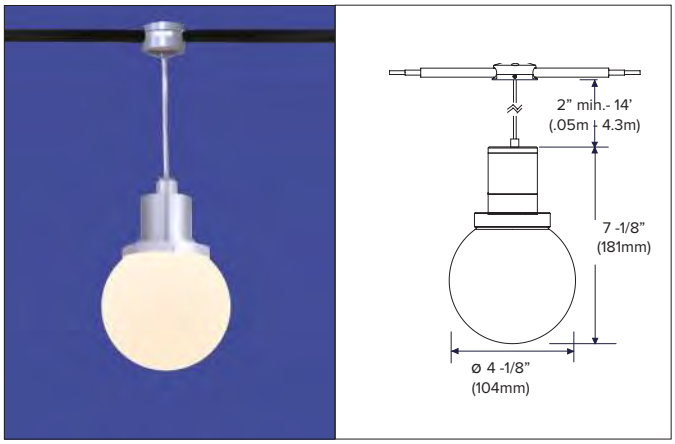

Kore-EX5 LED Pendant, Cable Mount, G Envelope Frosted
Aluminum or Black finish.

(EX5-K-PX-C-GEF-AL)
(EX5-K-PX-C-GEF-BLK)

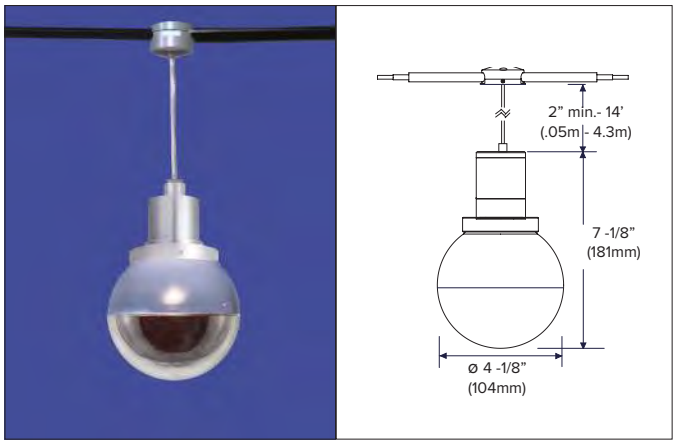

Kore-EX5 LED Pendant, Cable Mount, G Envelope Silver Bowl
Aluminum or Black finish.

(EX5-K-PX-C-GESB-AL)
(EX5-K-PX-C-GESB-BLK)

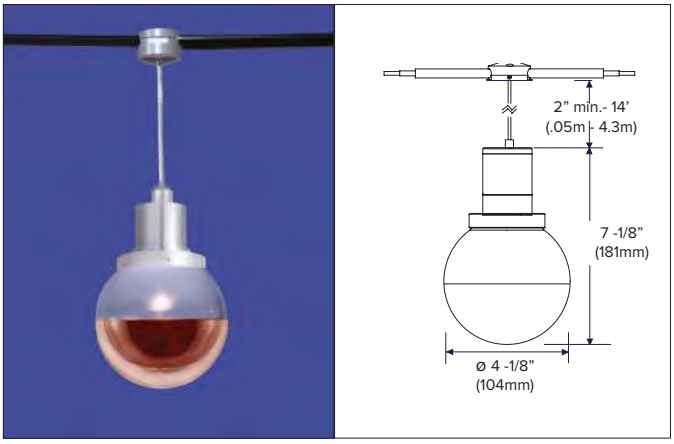

Kore-EX5 LED Pendant, Cable Mount, G Envelope Copper Bowl
Aluminum or Black finish.

(EX5-K-PX-C-GECB-AL)
(EX5-K-PX-C-GECB-BLK)

1. Order Power Supplies separately. Refer to Exton Power Supply IP20 Specsheet, IP24 Specsheet or IP66 Specsheet for options.
2. Order Accessories on p. 2 separately.
3. Power Cord is factory cut (X) to 1” increments between **2” min. to 14’ max. length standard** (specified Cord length, not overall length). Specify desired length, not field cuttable. Contact factory for longer lengths

Exton Powerspan Cable System

Exton - Kore-EX5 LED - Accessories

Exton Honeycomb Louver

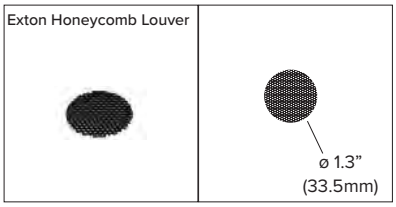

Exton Honeycomb Louver, Black (EX5-HCL-BLK)
1/8” Hexcell black metal. Controls spill illumination and glare.

Exton Sandblasted Lens

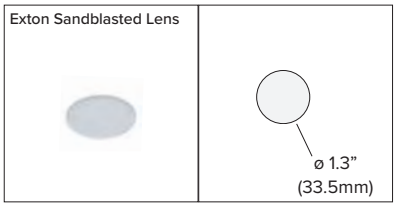

Exton Sandblasted Lens (EX5-SBL)
Creates an uniform beam pattern that is useful for wall washing. Tempered glass.

Exton Solite Lens

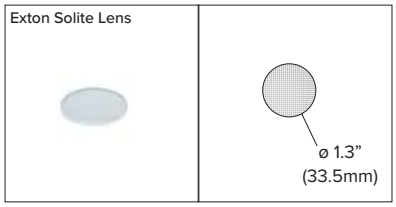

Exton Solite Lens (EX5-SOL)
Tempered glass with a stipple effect that that provides obscurity while retaining high transmission values. This low-iron optically clear glass offers maximum transmission and minimal absorption.

Exton Color Corrected Filter, 22K or 24K

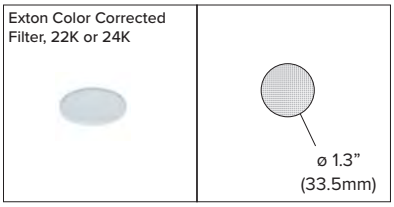

Exton Color Corrected Filter, 22K or 24K (EX5-CCT-22K/24K)
22K or 24K Kelvin Temperature results when used with the standard 27K Cree LED.

Note: Honeycomb Louver, Sandblasted or Solite Lenses recommended for Clear Envelopes.

Click on the linked images below to visit the Exton Gallery.



Kore-EX5 LED Pendant, Cable Mount,
Black Finish,
G Envelope Frosted



Kore-EX5 LED Pendant, Cable Mount,
Black Finish,
G Envelope Silver Bowl

Click on the image below to visit the Exton Application Guide.



Dirigo_M1

YS9

Lam Partners
ARCHITECTURAL LIGHTING DESIGN

Lines | Modular Master
64591



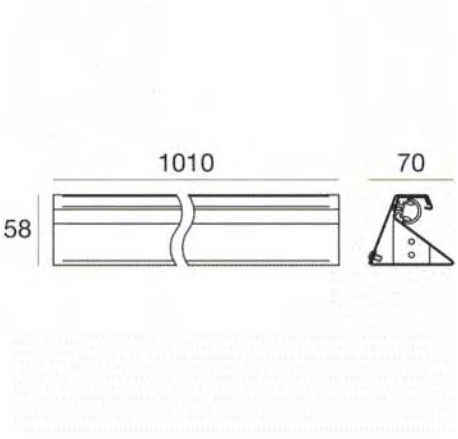

Technical data	
Designer	Studio RIGO
Type	Surface
Installation position	Floor
Installation environment	Outdoor
Glow wire test	850°
Direct mounting on normally flammable surfaces	Yes
CE	Yes
ETL	No
Fire Rated (BS 476 PT21 compliant)	No
Induction	No
Motion sensor	No
Directional	No
Tilting	No
Walk-over	Yes
Drive-over	No
Cable included	No
Resin potting	No

Finishing casing	
Material	AISI 316L steel
Processing	Satin finishing

Finishing diffuser	
Material	UV Resistant Polymethylmethacrylate
Colour	opaline

Dirigo_M1

Lines | Modular Master
64591

Single emission lines for outdoor application.

The device body is made of aisi 316l steel, processed by means of satin finishing; the diffuser is made of uv resistant polymethylmethacrylate.

and can be floor-mounted.

Compliant with the EN 60598-1 standard and its specific provisions.

Dirigo_M1

Lines | Modular Master
64591

Components

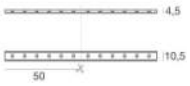

silicone_c - LED Strip | stripLED 72 W 24 V

Code
62403

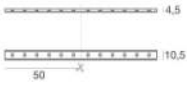

silicone_c - LED Strip | stripLED 72 W 24 V

Code
62403N

Dirigo_M1

Dirigo_M1 | Lines | Accessories
64591

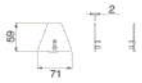

Closing cap

Code
64592

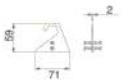

Closing cap

Code
64593

YS10

Lam Partners

XOOLUM™ HYDRA White IP67



24 V compact modular linear LED luminaire in IP67 with adjustable luminaire head (45°). Full polyurethane encapsulation with an opal polyurethane top layer offering a premium water proof sealing (values), UV resistance (no coloration or increase of absorption) chemical stability against urban gazes and protection against abrasion. The absence of air gap between the encapsulation material and the optics reduces the cleaning and maintenance costs. Robust housing made from extruded and anodized aluminum profile and screwed aluminum end caps available in silver or black color as surface-mounted or pendant version. Delivered with 2 m (6.56') open end black cable. Ideal solution for general, sign or accent lighting in outdoor or humid environments. Light source assembled using state of the art automated Reel to Reel (R2R) production process supporting LED Linear™ Tj Away® thin flexible circuit board technology. In combination with ceramic LED packages a thermal resistivity of 18.5 K/W is achieved for an optimal heat dissipation (junction to profile) which guarantees an outstanding lifetime of > 60,000 hrs L80/B10. Embeds high quality japanese LEDs with 3 step MacAdams (SDCM3) binning centered on target CCT (One Bin Only) with an extended photometric code of Wxxx/339 ensuring an exceptional color consistency over the rated lifetime. Premium color rendition with a CRI of 95 and TM-30-15 up to R_f = 91 / R_g = 100 ensuring a remarkable light quality. Consistent light intensity all along the luminaire length is obtained thanks to active current regulation operated by dedicated integrated circuits (ICs) on each step. Protected against electrostatic discharge ± 2,000 V and polarity miswiring. Fully PWM dimmable for frequency > 0 Hz up to 2 kHz (flicker free for frequency higher then 1.2 kHz according to IEEE P1789 standard). Engineered and produced in Germany.

Dimensions & available lengths

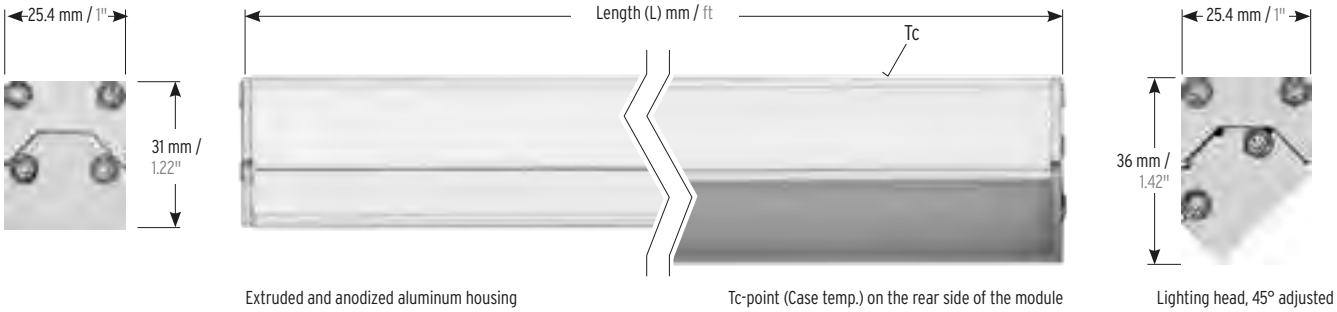

Extruded and anodized aluminum housing

Tc-point (Case temp.) on the rear side of the module

Lighting head, 45° adjusted

Fixture build to length (not field cuttable):

L_{min}: 198 mm; L_{max}: 4,010 mm (HD25: 3,010 mm); in 62.5 mm increments
L_{min}: 7.8"; L_{max}: 13.16' (HD25: 9.88'); in 2.46" increments

Electrical & output data

Voltage	24 Volt (23 V_{min}, 25 V_{max})
Temperature[B]	Tc_{min} = -25°C / -13°F, Tc_{max} = specific, see Table below
Storage temperature	Ts_{min} = -30°C / -22°F, Ts_{max} = 85°C / 185°F
Ambient temperature	Ta_{min} = -25°C / -13°F, Ta_{max} = specific, see Table below
CRI / R9	up to 95 / up to 65

XOOLUM™ HYDRA	HD6	HD10	HD15	HD25
Power (W/m / W/ft)[A]	6 / 1.8	10 / 3.1	15 / 4.6	25 / 7.6
Efficacy (lm/W)[A] @ W850	52	51	55	53
max. length (m / ft)	4 / 13.1	4 / 13.1	4 / 13.1	3 / 9.8
Temperature Tc-point (Tc_{max})[B]	60°C / 140°F	60°C / 140°F	60°C / 140°F	65°C / 149°F
Ambient temperature (Tc_{max})	40°C / 104°F	40°C / 104°F	40°C / 104°F	35°C / 95°F

Color temperature LED tape used[C]			Color temperature delivered finished fixture		HD6	HD10	HD15	HD25
					low output → high output			
					lumen/meter (lm/m)[A] lumen/feet (lm/ft)[A]			
W820		2,000 K	2,400 K		180 / 54	300 / 90	480 / 145	770 / 234
W822		2,200 K	2,700 K		200 / 60	340 / 103	540 / 164	880 / 267
W825		2,500 K	3,000 K		230 / 69	390 / 118	620 / 188	1,010 / 307
W827	W927	2,700 K	3,500 K	3,400 K	210 / 63	350 / 106	660 / 200	1,070 / 325
W830	W930	3,000 K	3,900 K	3,800 K	210 / 63	350 / 106	700 / 212	1,140 / 346
W835	W935	3,500 K	4,600 K	4,400 K	220 / 66	360 / 109	730 / 222	1,190 / 362
W840	W940	4,000 K	5,500 K	5,600 K	220 / 66	370 / 112	750 / 228	1,220 / 371
W850		5,000 K	7,200 K		310 / 93	510 / 154	820 / 249	1,330 / 404

[A] The given data are typical values. Due to tolerances of the production process and the electrical components, values for light output and electrical power can vary up to 10%.

[B] The Tc-point should be measured in thermal equilibrium according to IEC EN 60598-1.

[C] In case of IP67 products, tolerances in the color temperature can occur.

ONE BIN ONLY

Lifetime: L80/B10 > 60.000 h

Photometric code: Wxxx/339

LM 79 compliant

LM 80 compliant

UV protected

Resistant to solvents

Saltwater resistant

Temporary immersion protection

Impact resistant (suitable for walk over): IK10

Order code

Your order code	XOOLUM HYD	HD__	W_	__	_____	_	__	__	IP67
Order code example	XOOLUM HYD	HD25	W8	27	2010	S	A	BS	IP67




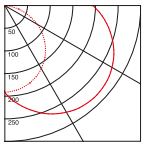
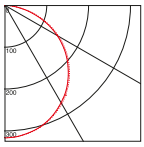

opal encapsulation

DIN 5040:A50

LED tape
HYDRA HD6 ..... HD6
HYDRA HD10 ..... HD10
HYDRA HD15 ..... HD15
HYDRA HD25 ..... HD25

Color rendering
> 80 8
> 90 (only HD6, HD10) 9

Color temperature delivered finished fixture	Color temperature LED tape used	
2,400 K	2,000 K	20
2,700 K	2,200 K	22
3,000 K	2,500 K	25
3,500 K 3,400 K	2,700 K	27
3,900 K 3,800 K	3,000 K	30
4,600 K 4,400 K	3,500 K	35
5,500 K 5,600 K	4,000 K	40
7,200 K	5,000 K	50

Length
L_{min}: 198 mm (7.8");
L_{max}: 4,010 mm (13.16'); HD25: 3,010 mm (9.88');
in 62.5 mm (2.46") increments

Profile color
Silver ..... S
Black ..... B

Options
Non adjustable ..... NA
Adjustable ..... A

Cable feed[D]
Back side, 2 m / 6.56'
(through mounting channel) ..... BS
Front side, 2 m / 6.56'
(through end caps) ..... FS

Ingress protection
IP67 ..... IP67

[D] **Cable feed**







Please choose your accessories

☑ Fixture comes with 2 m / 6.56' open end cable.

Mounting	
☑ no further accessories required, fixture base profile = mounting channel	

Mounting (optional)	Art.-#	
☐ XOOLUM™ 007 Swivel-Angle Set +/- 45°	13000081	
☐ VarioPendant 007 Slide Silver	13000157	
☐ VarioPendant 007 Slide black	13000158	

For max. cable length between driver and fixture please visit **www.led-linear.com/cable-length**

Recommended power supply	Art.-#	
☐ Power Supply Unit IP67	16000153	

Recommended control unit	Art.-#	
☐ Control System White/IQ-White	16000268-DT6	

Specification Sheet

lumenbeam

Small

WHITE AND STATIC COLORS

Project Name _____ **Qty** _____

Type _____ **Catalog / Part Number** _____



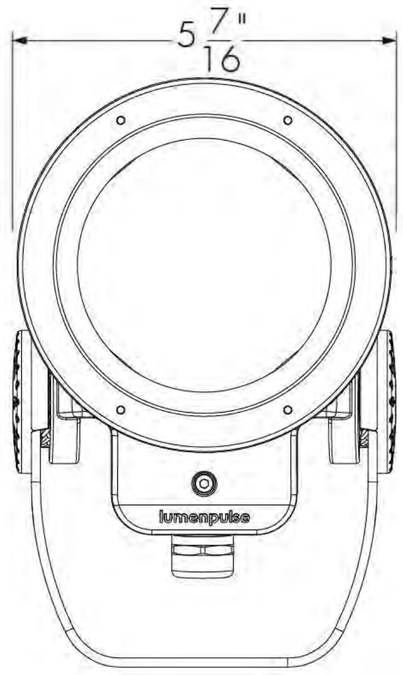

Front view

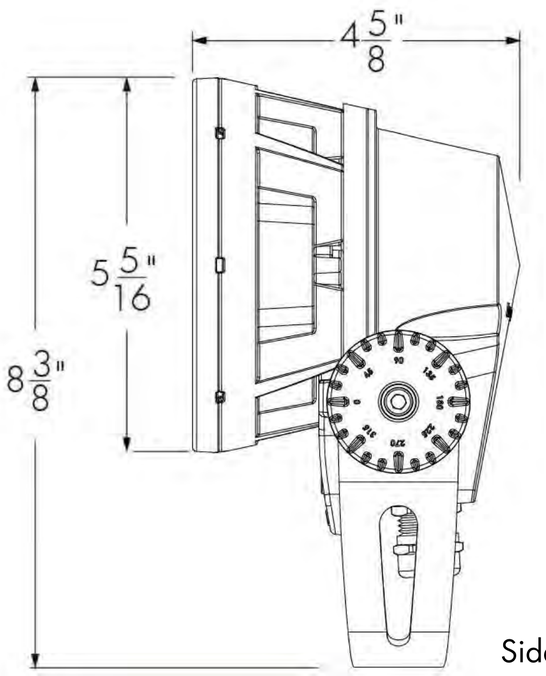

Side view

Photometric Summary

4000K	Delivered output (lm)	Intensity (peak cd)
VN	853	37,291
NS	750	23,839
NF	668	4,235
FL	639	1,770
WFL	660	664

Photometric performance is measured in compliance with IESNA LM-79-08.

Optics

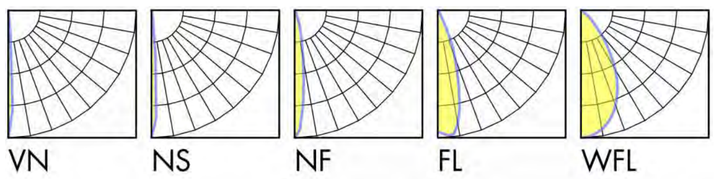

Control

ON/OFF 0-10V DALI DMXrdm

Rating

cULus CE RoHS

Description

The Lumenbeam Small is a high-performance, 14W luminaire for lighting landscapes, trees, columns, monuments and architectural details. It offers a flexible package of options: a choice of optics for flood or accent lighting; a number of color temperatures and colors; various mounting options, accessories, spread lenses and controls.

Features

Color and Color Temperature	2200K, 2700K, 3000K, 3500K, 4000K, 5700K, Red, Green, Blue
Optics (nominal distribution)	6°, 10°, 20°, 40°, 60°, Elliptical distribution on 10° to 40° optics
Optical Option	Linear spread lens horizontal distribution, Linear spread lens vertical distribution
Mounting Option	Stake Mounting, Knuckle Mounting, Canopy Cover Mounting
Options	3G ANSI C136.31 Vibration Rating for bridge applications, Corrosion-resistant coating for hostile environments
Power Consumption	14 W
Warranty	5-year limited warranty

Performance

Delivered Output	853 lm (4000K, VN optic)
Delivered Intensity	37,291 cd at nadir (4000K, VN optic)
Illuminance at Distance	Minimum 1 fc at 193 ft distance (4000K, VN optic)
Color Consistency	2 SDCM
Color Rendering	CRI 80+
Lumen Maintenance	L70 120,000 hrs (Ta 25 °C)

lumenpulse™

1220 Marie-Victorin Blvd., Longueuil, QC J4G 2H9 CA **T** 1.877.937.3003 | 514.937.3003 **F** 514.937.6289
info@lumenpulse.com **www.lumenpulsegroup.com**

Lumenpulse Group Inc. reserves the right to make changes to this product at any time without prior notice and such modification shall be effective immediately
2017.11.28 copyright © 2017 Lumenpulse Group Inc.
MG - R20

Specification Sheet

lumenbeam

Small

WHITE AND STATIC COLORS

Physical

Housing Material	Low copper content high pressure die-cast aluminum
Yoke Material	Heavy aluminum
Lens Material	Clear tempered glass
Hardware Material	Stainless steel
Gasket Material	Silicone
Surface Finish	Electrostatically applied polyester powder coat
Weight	5.2 lbs
EPA	Front = 0.35 sq ft, Side = 0.31 sq ft

Electrical and control

Voltage	100 to 277 volts
Fixture Cable	Power and data in 1 cable, 3 ft cord standard (#16-5), other lengths available
Resolution (DMX/RDM)	Per fixture, 8-bit or 16-bit
Control	On/Off control, 0-10V dimming, DALI dimming, DMX/RDM enabled, Lumentalk system is enabled with LDB accessory - see typical wiring diagrams for details

Environmental

Operating Temperature	-13 °F to 122 °F
IP Rating	IP66
IK Rating	IK07

Accessories (order separately)

Control Boxes	Power and control box - daisy chain configuration, Power and control box - star configuration, Lumentalk Data Bridge
Control Systems	Lumentouch 2.0™, Lumencue, Lumentone
Diagnostic and Addressing Tools	LumenID, LumentalkID

lumenpulse™

1220 Marie-Victorin Blvd., Longueuil, QC J4G 2H9 CA **T** 1.877.937.3003 | 514.937.3003 **F** 514.937.6289
info@lumenpulse.com **www.lumenpulsegroup.com**

Lumenpulse Group Inc. reserves the right to make changes to this product at any time without prior notice and such modification shall be effective immediately
2017.11.28 copyright © 2017 Lumenpulse Group Inc.
MG - R20

Specification Sheet

lumenbeam

Small

WHITE AND STATIC COLORS

Mounting details

Mounting hole pattern - standard yoke

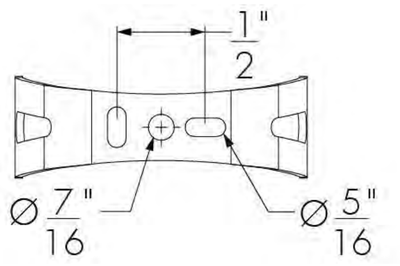

Adjustable pivot limits

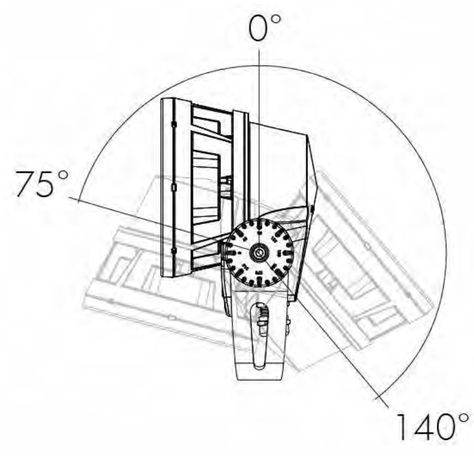

Mounting options

SK - Stake mounting

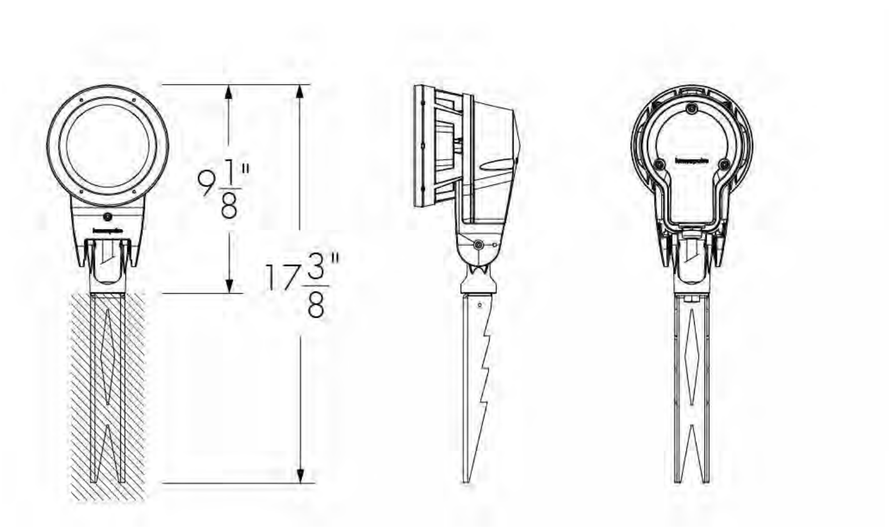

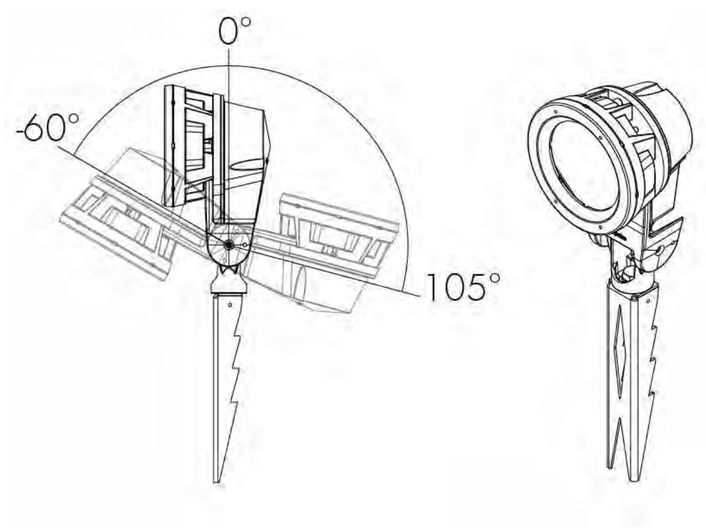

Adjustable pivot limits

KN - Knuckle mounting

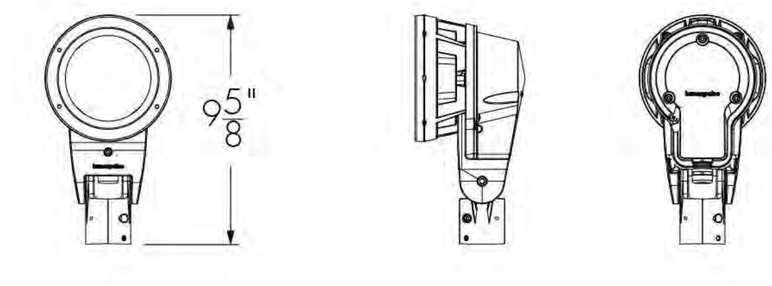

Suitable for 1/2 in, 3/4 in, and 1 in pipe diameter

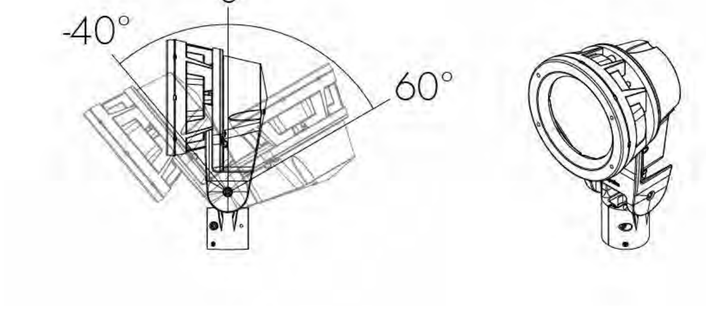

Adjustable pivot limits

CN - Canopy cover

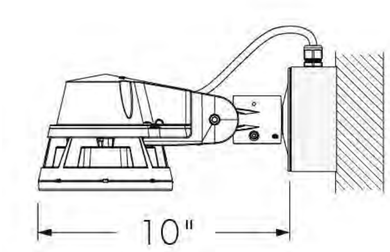

Suitable for standard round junction boxes, surface mounted

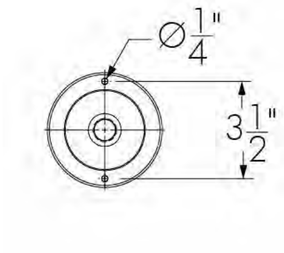

Mounting hole pattern

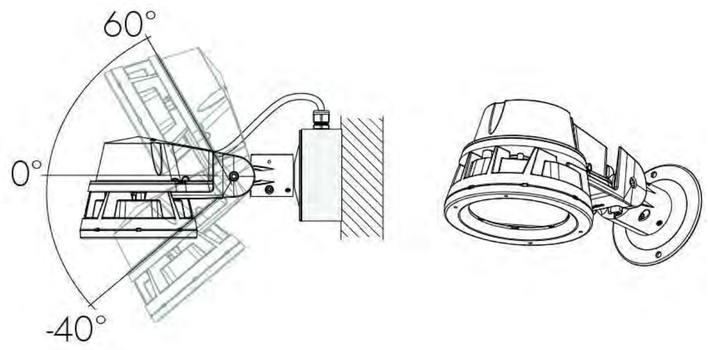

Adjustable pivot limits

lumenpulse™

1220 Marie-Victorin Blvd., Longueuil, QC J4G 2H9 CA **T** 1.877.937.3003 | 514.937.3003 **F** 514.937.6289
info@lumenpulse.com **www.lumenpulsegroup.com**

Lumenpulse Group Inc. reserves the right to make changes to this product at any time without prior notice and such modification shall be effective immediately
2017.11.28 copyright © 2017 Lumenpulse Group Inc.
MG - R20

Specification Sheet

lumenbeam

Small

WHITE AND STATIC COLORS

Optical options

LSLH - Linear spread lens horizontal distribution
LSLV - Linear spread lens vertical distribution

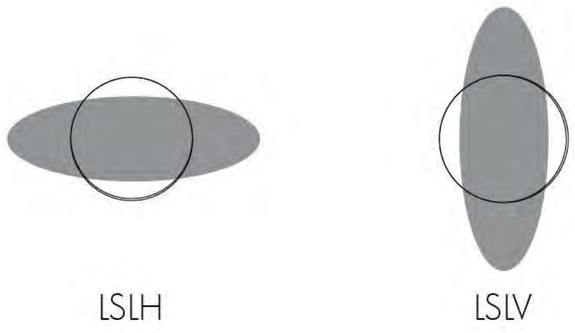

	Beam angle with LSLH/LSLV
VN	8° x 60°
NS	9° x 60°
NF	18° x 65°
FL	32° x 72°

Factory installed, not adjustable on site. Not available for WFL optic.
See 'Optical Accessories' section for field adjustable spread lens (LSLA).

Mounting accessories (order separately)

Round pole mounting accessory

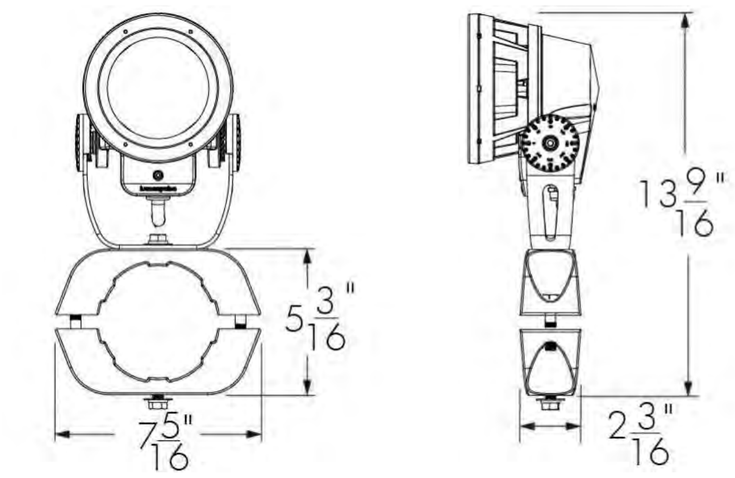

PM4 model shown.
Consult factory for square pole section.

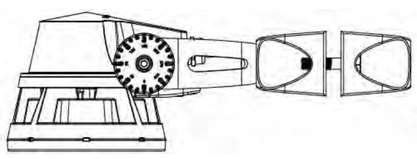

PM4-1, PM4.5-1, PM5-1 - Round pole mounting accessory - single fixture

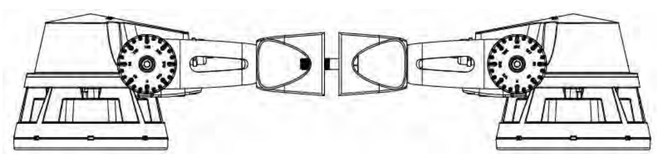

PM4-2, PM4.5-2, PM5-2 - Round pole mounting accessory - twin fixures
*One bracket assembly is supplied per 2 fixtures unless otherwise specified.

	PM4	PM4.5	PM5
For pole Ø	4" ± 1/16"	4.5" ± 1/16"	5" ± 1/16"

Consult factory for other pole diameters.

Tenon adapter

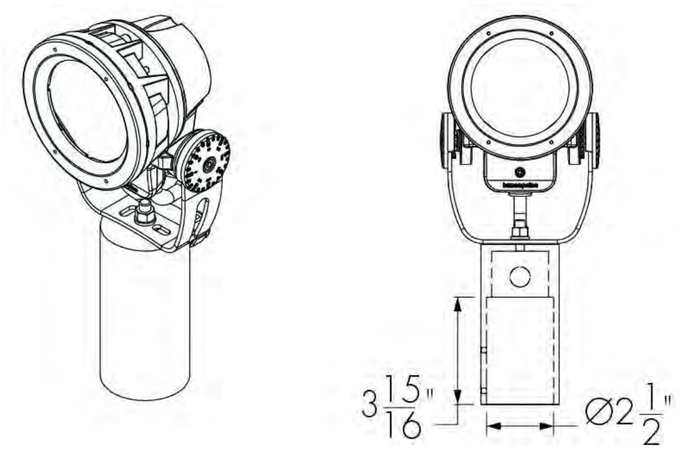

TN2 - Tenon adapter to fit on 2 3/8 in O.D. tenon

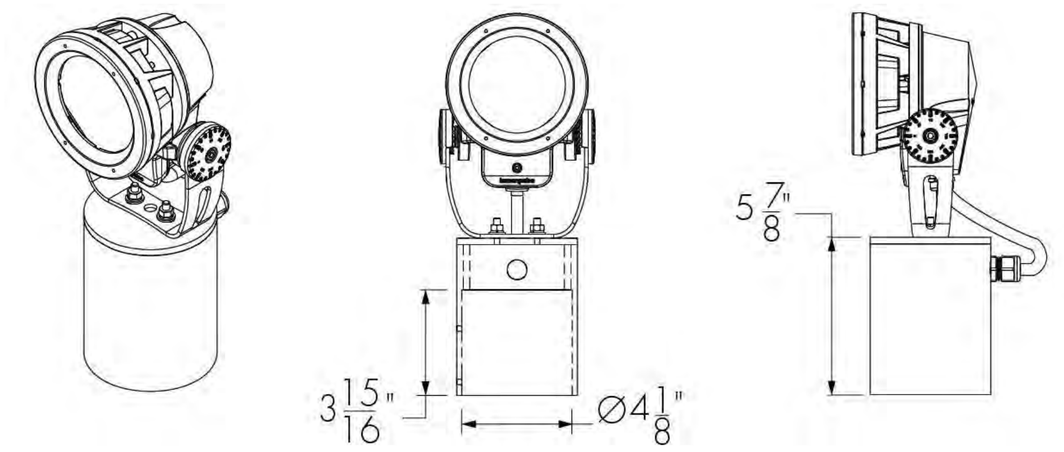

TN4 - Tenon adpater to fit on 4 in O.D. tenon

lumenpulse™
1220 Marie-Victorin Blvd., Longueuil, QC J4G 2H9 CA **T** 1.877.937.3003 | 514.937.3003 **F** 514.937.6289
info@lumenpulse.com **www.lumenpulsegroup.com**

Lumenpulse Group Inc. reserves the right to make changes to this product at any time without prior notice and such modification shall be effective immediately
2017.11.28 copyright © 2017 Lumenpulse Group Inc.
MG - R20

Specification Sheet

lumenbeam

Small

WHITE AND STATIC COLORS

Optical accessories (order separately)

Installed optical accessories will affect the maximum pivot limits for each mounting option, consult factory for details.

SN - Snoot

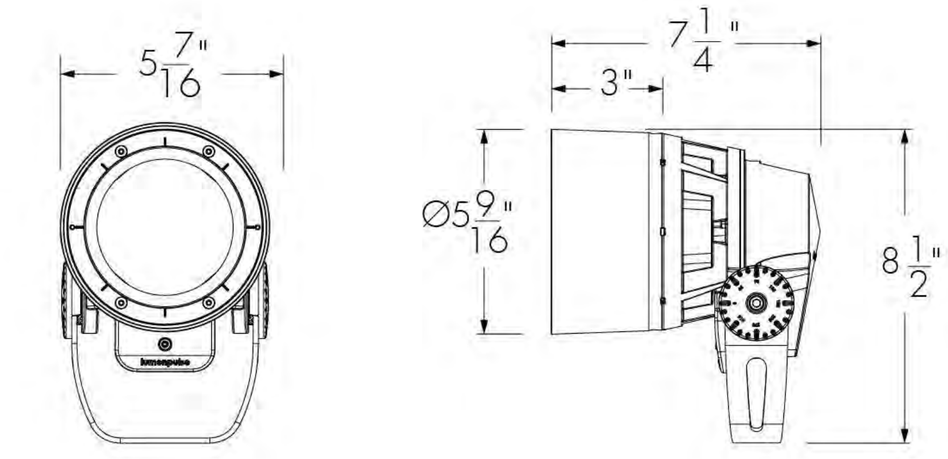

LBSSN-FINISH-BK
Interior surface painted black. Please specify desired exterior FINISH from list of available finishes.

LSLA - Linear spread lens adjustable

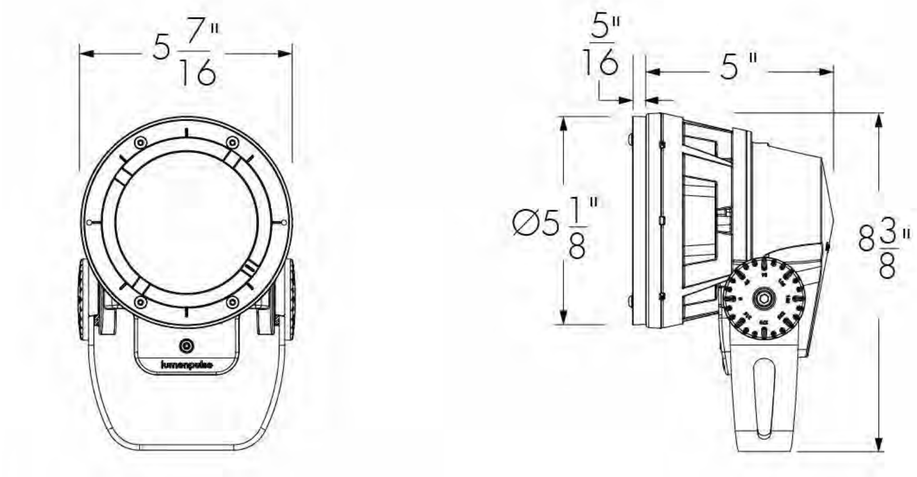

LBSLSLA-FINISH
Please specify desired exterior FINISH from list of available finishes.

Accessory combinations

+	Snoot	Visor
Linear spread lens adjustable	YES	YES
Wire guard	YES	YES

Accessory combinations must be ordered together on a single line.
Ex: A snoot + wire guard combination order code is LBSSNWG-BK-BK.

VS - Visor

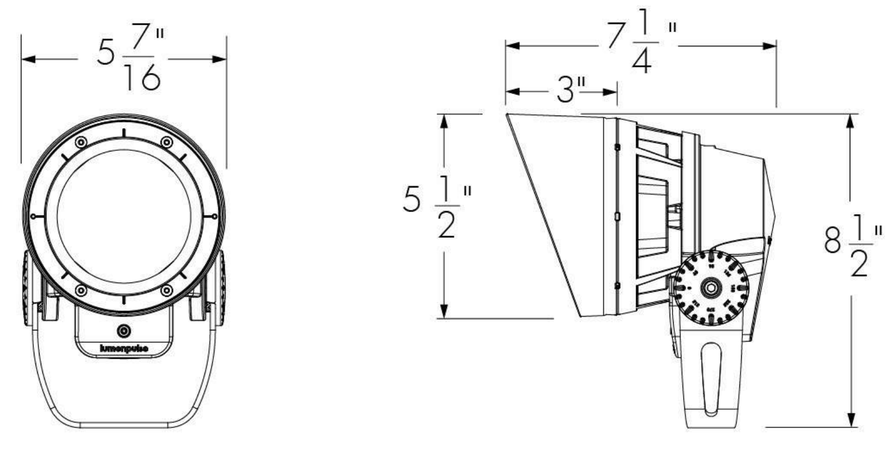

LBSVS-FINISH-BK
Interior surface painted black. Please specify desired exterior FINISH from list of available finishes.

WG - Wire guard

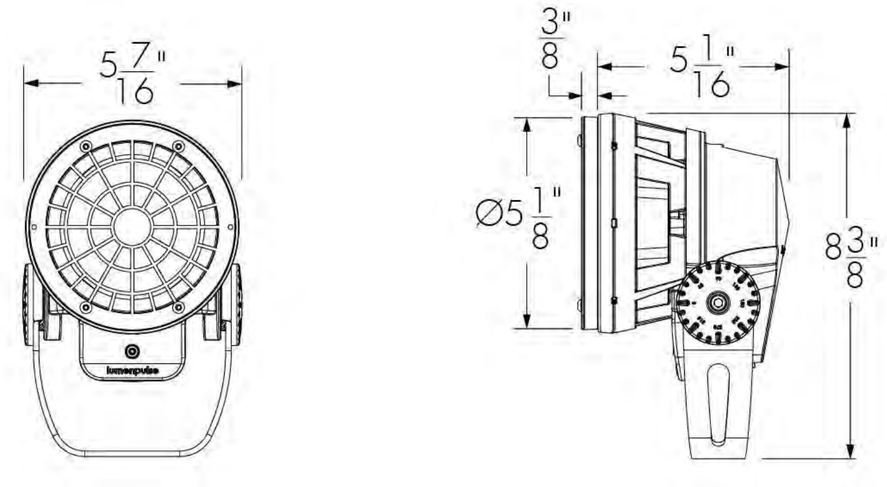

LBSWG-FINISH
Please specify desired exterior FINISH from list of available finishes.

Available exterior finishes for optical accessories

BK - Black Sandtex®
BRZ - Bronze Sandtex®
SI - Silver Sandtex®
WH - Smooth white
BKTX - Textured black
BRZTX - Textured bronze, non-metallic
GRATX - Textured medium gray
GRNTX - Textured green
WHTX - Textured white
CC - Custom color and finish (please specify RAL color)*

*Lumenpulse offers a wide selection of RAL CLASSIC (K7) colors with a smooth texture and high-gloss finish. Please consult factory for a list of available K7 colors, other RAL textures and glosses, or to match alternate color charts. Final color matching results may vary.

lumenpulse™
1220 Marie-Victorin Blvd., Longueuil, QC J4G 2H9 CA **T** 1.877.937.3003 | 514.937.3003 **F** 514.937.6289
info@lumenpulse.com **www.lumenpulsegroup.com**

Lumenpulse Group Inc. reserves the right to make changes to this product at any time without prior notice and such modification shall be effective immediately
2017.11.28 copyright © 2017 Lumenpulse Group Inc.
MG - R20

Specification Sheet

lumenbeam

Small

WHITE AND STATIC COLORS

How to order

1	2	3	4	5	6	7	8
LBS							

9	10	11

1 . Housing

LBS	Lumenbeam™ Small

2 . Voltage

100	100 volts
120	120 volts
208	208 volts
220	220 volts
240	240 volts
277	277 volts

3 . Color and Color Temperature (1)

22K	2200K
27K	2700K
30K	3000K
35K	3500K
40K	4000K
57K	5700K
RD	Red
GR	Green
BL	Blue

4 . Optics

VN	Very Narrow 6°
NS	Narrow Spot 10°
NF	Narrow Flood 20°
FL	Flood 40°
WFL	Wide Flood 60°

5 . Optical Option

LSLH	Linear spread lens horizontal distribution (2)
LSLV	Linear spread lens vertical distribution (2)

6 . Finish

BK	Black Sandtex®
BRZ	Bronze Sandtex®
SI	Silver Sandtex®
WH	Smooth white
BKTX	Textured black
BRZTX	Textured bronze non-metallic
GRATX	Textured medium gray
GRNTX	Textured green
WHTX	Textured white
CC	Custom color and finish (please specify RAL color) (3)

7 . Control (4) (5)

NO	On/Off control
DIM	0-10V dimming
DALI	DALI dimming
DMX/RDM	DMX/RDM enabled

8 . Mounting Option (6)

SK	Stake Mounting
KN	Knuckle Mounting
CN	Canopy Cover Mounting

lumenpulse™

1220 Marie-Victorin Blvd., Longueuil, QC J4G 2H9 CA **T** 1.877.937.3003 | 514.937.3003 **F** 514.937.6289
info@lumenpulse.com **www.lumenpulsegroup.com**

Lumenpulse Group Inc. reserves the right to make changes to this product at any time without prior notice and such modification shall be effective immediately
2017.11.28 copyright © 2017 Lumenpulse Group Inc.
MG - R20

Specification Sheet

lumenbeam

Small

WHITE AND STATIC COLORS

9 . Options

3GV	3G ANSI C136.31 Vibration Rating for bridge applications [7]
CRC	Corrosion-resistant coating for hostile environments [8]

10 . Certification

UL	UL compliant
CE	CE compliant

11 . Cable Length [9]

3FT	3 ft [9] [10]
10FT	10 ft
20FT	20 ft
30FT	30 ft
50FT	50 ft
70FT	70 ft
100FT	100 ft

Notes:

[1] Consult factory for availability of static Royal Blue, 6500K and 90+ CRI.

[2] Factory installed, not available for 60° optic. Field adjustable spread lens optical accessory available, order separately.

[3] Lumenpulse offers a wide selection of RAL CLASSIC (K7) colors with a smooth texture and high-gloss finish. Please consult factory for a list of available K7 colors, other RAL textures and glosses, or to match alternate color charts. Final color matching results may vary.

[4] Lumentalk system is enabled with LDB accessory, DIM or DMX/RDM must be specified in the order code. See the typical wiring diagrams in the specification sheet for details.

[5] A Lumentranslator and LumentalkID (LIDLT) must be specified for Lumentalk applications. Consult Lumentranslator and Lumentalk pages and specification sheets for details.

[6] The standard yoke is provided unless an alternate mounting option is specified as part of the order code.

[7] 3GV option is available for standard yoke mounting only.

[8] Use only when exposed to salt spray and harsh chemicals. This option is not required for normal outdoor exposure.

[9] 3 ft cable length is standard unless otherwise specified.

[10] Maximum of 3 ft cable length for daisy chain DMX applications with CBX-DS.

lumenpulse™

1220 Marie-Victorin Blvd., Longueuil, QC J4G 2H9 CA **T** 1.877.937.3003 | 514.937.3003 **F** 514.937.6289
info@lumenpulse.com **www.lumenpulsegroup.com**

Lumenpulse Group Inc. reserves the right to make changes to this product at any time without prior notice and such modification shall be effective immediately
2017.11.28 copyright © 2017 Lumenpulse Group Inc.
MG - R20

v2 Lighting Group™

CORE 200 surface mount

YS12

Lam Partners ARCHITECTURAL LIGHTING DESIGN

PROJECT

Job _____

Type _____

Part # _____

Notes

SPECIFICATIONS

Source	Xicato XTM LED module - up to 2000 lumens
C.C.T.	2700K, 3000K, 3500K or 4000K
Color Consistency	1x2 SDCM (MacAdam) along BBL, CCT +/- 40K to 70K, Duv +/- .001
CRI (Ra)	83 or 98
Driver / Location	Included / Remote mount or deep canopy options
Dimming	0-10V or phase dimming to 10% standard; DALI, DMX and 1% dimming available
Input Voltage	100 to 277VAC, phase dimmable versions are 120VAC only
Power	Up to 24 watts max, depending on LED module / driver
Reflector	20°, 40° or 60° - field replaceable without tools
Material	CNC machined aluminum with stainless steel hardware
Finish	Powder coat - TGIC polyester for exterior and interior use
Weight	1.6 lb. [0.7 kg]
Location	Listed for Wet & Damp locations
Approvals	ETL Listed to UL 1598, 2108, 8750 and CSA C22.2# 9 & #250.0
L80 Life	> 50,000 hours at 80% lumen maintenance based on IESNA LM-80-08
Warranty	Lifetime Limited Warranty - see warranty for details
IES Files	LM-79-08 IES files available at www.v2LightingGroup.com/downloads
Modifications	Any modification or customization is possible - consult factory



LED · INDOOR OUTDOOR · WET LOCATION · DIMMABLE · LIGHTSOURCE BY XICATO® · MADE IN U.S.A. · TITLE 24 COMPLIANT · c ETL us LISTED Intertek 4001580

ORDERING LOGIC

Model	Driver Location	Dimming	Mounting Location	Output	CRI *	C.C.T.	Reflector	Shell Color	Options
C2SM -				-				-	-
	R=Remote	**N**=None	**D**=Damp	**07**=700 lm	**83**=83	**27**=2700K	**20**=20°	**XX**	
	D=Deep Canopy	**P**=Phase	**W**=Wet	**10**=950 lm	**98**=98*	**30**=3000K	**40**=40°	(see chart on page 4)	
		V=0-10V		**13**=1300 lm		**35**=3500K	**60**=60°		
		Z=Other		**20**=2000 lm		**40**=4000K		**ZZ**=Custom	

* 98 CRI not available in 2000 lm

Example Part Number: **C2SM-RND-13832740-S3**
CORE **2**00 **S**X Surface **M**ount **- R**emote Driver, **N**o Dimming, **D**amp Location **- 13**00 lm, **83** CRI, **27**00K, **40**° Reflector **- S3** Red Shell

 ©2015 v2 Lighting Group, Inc. Specifications subject to change without notice.

DIMENSIONS

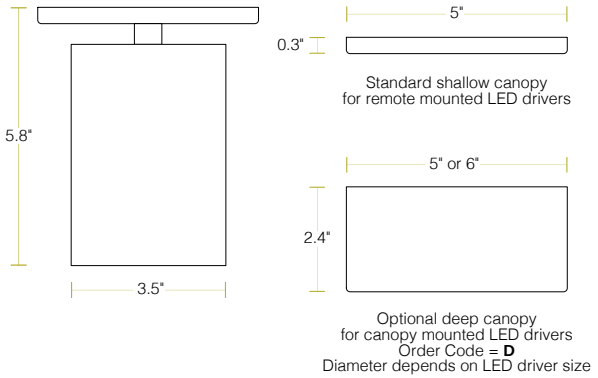

All canopies fit standard 3.5" and 4" round and octagonal junction boxes

Not to scale, dimensions are nominal
Consult factory for CAD drawings

LED OPTIONS

Reflector Option	LED Specifications				
	LES[1]	CRI	Lumens[2, 3, 4]	Wattage[5] (W)	Efficacy[6] (lm/W)
20°, 40° & 60°	19mm	Ra = 83 ± 3	700	5.6	129
			950	8.2	118
			1300	11.7	111
			2000	19.5	102
		Ra = 98 R9 ≥ 90 R15 ≥ 95	700	7.4	97
			950	10.9	89
			1300	15.6	83

1 LES: Light Emitting Surface diameter
2 ±10%
3 Source lumens - see photometrics on page 3 for LOR to calculate delivered lumens
4 Higher lumen outputs are available in CORE / QUBE 300 and 400 series
5 Maximum luminaire wattage including LED driver = LED wattage x 1.2
6 Higher efficacies are available via lower drive currents - consult factory

CONTROL OPTIONS

Standard LED Drivers* (included in base price)	Order Code **V** = 0-10V dimming to 10%
	Order Code **P** = Phase dimming to 10% Compatible with both forward and reverse phase dimmers
Optional LED Drivers*	eldoLED 0-10V, DALI, or DMX dimming to 0%
	Lutron Hi-lume™ A-series, EcoSystem or forward phase dimming to 1%
	Lutron Hi-lume™ 5-series, EcoSystem dimming to 5%

* All LED drivers must be mounted in a deep canopy or remote
* Standard LED drivers are suitable for Wet Location
* Optional LED drivers are suitable for Damp Location
* For EM applications:
  All LED drivers may be used with 3rd party inverter style systems

 ©2015 v2 Lighting Group, Inc. Specifications subject to change without notice.

PHOTOMETRICS

LM-79-08 IES files available at www.v2LightingGroup.com/downloads

Beam Angle	Order Code	Intensity Plot (cd) (1300lm)	Polar Plot (cd) (1300lm)	Cone Diagram (1300lm)	Description
20°	**20**	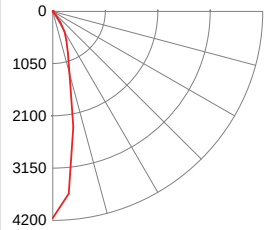	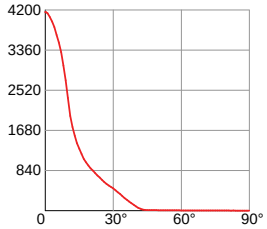	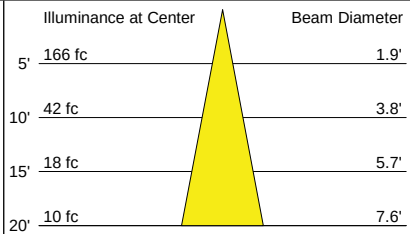	CBCP = 3195 cd/klm Beam Angle = 21° Field Angle = 63° LOR = 89.4% Beam = full width @ 50% Field = full width @ 90%
40°	**40**	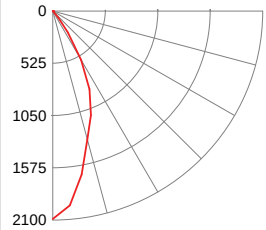	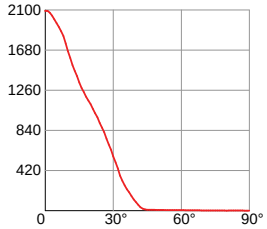	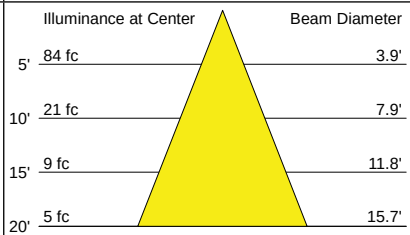	CBCP = 1607 cd/klm Beam Angle = 43° Field Angle = 73° LOR = 88.7% Beam = full width @ 50% Field = full width @ 90%
60°	**60**	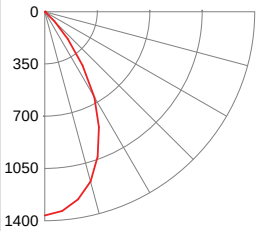	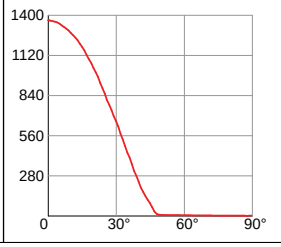	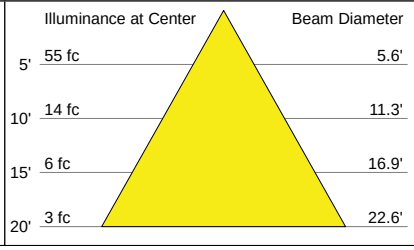	CBCP = 1050 cd/klm Beam Angle = 59° Field Angle = 86° LOR = 85.2% Beam = full width @ 50% Field = full width @ 90%

Beam Shaping Options

Add the order code shown below to the options box at the end of the part number:

Order Code	Description
-HL	Honeycomb Louver
-DF	Diffusion Lens
-SF	Satin finish on any standard reflector
-LS	Linear Spread Lens (60° x 1°)
-WW	Wall Wash Lens (shifts beam 20° from vertical)

 ©2015 v2 Lighting Group, Inc. Specifications subject to change without notice.

COLOR OPTIONS

Anodized Effect


A1 Clear Silver


A2 Champagne


A3 Light Bronze


A4 Medium Bronze


A5 Dark Bronze


A6 Black

Metallic


M1 Pearl


M2 Sea Foam


M3 Forest Gray


M4 Charcoal Gray


M5 Gunmetal Gray


M6 Dove Gray


M7 Old Copper


M8 Old Brass

Basic

L1 Gloss White


L2 Gloss Light Gray


L3 Gloss Dark Gray


L4 Gloss Black

T1 Textured Matte White


T2 Textured Matte Light Gray


T3 Textured Metallic Dark Gray


T4 Textured Matte Black

Sparkle


S1 Light Orange


S2 Deep Orange


S3 Red


S4 Burgundy


S5 Violet


S6 Deep Blue


S7 Sky Blue


S8 Bright Green

The complete range of powder coat colors from Tiger Drylac is available - consult factory
Custom match powder coat colors are available - consult factory
Printed or on-screen colors are only approximations - consult v2 Color Chip Set Rev.4 before specifying

 ©2015 v2 Lighting Group, Inc. Specifications subject to change without notice.

YS13

Lam Partners
ARCHITECTURAL LIGHTING DESIGN

CYLINDER
CY3-FB

CYLINDER LED LUMINAIRE
FIXED SURFACE MOUNT



Fixed 3.25" diameter 7.40" tall LED for ceiling mount. Perfect for applications having no plenum recess depth. Available in 80+, 90+, 97+ CRI & Warm Dim. Delivered lumen range of 640lm to 1993lm. Lucifer Lighting developed proprietary field-changeable optics available in 15°, 25°, 40° & 60° beams. Dry / Damp location.

PERFORMANCE

80+ CRI (40° OPTIC)

LED Configuration	Delivered Lumens lm	Power Consumption W	Luminous Efficacy lm/W
80C25A	1527	23	65
80C32A	1993	33	60

90+ CRI (40° OPTIC)

LED Configuration	Delivered Lumens lm	Power Consumption W	Luminous Efficacy lm/W
90C20A	1308	23	56
90C27A	1708	33	52

97+ CRI (40° OPTIC)

LED Configuration	Delivered Lumens lm	Power Consumption W	Luminous Efficacy lm/W
97C19A	1171	23	50
97C24A	1528	33	46

WARM DIM 90+ CRI (40° OPTIC)

LED Configuration	Delivered Lumens lm	Power Consumption W	Luminous Efficacy lm/W
90W13A	990	16	62

ORDERING INFORMATION - CYLINDER

JA8-2016 INDICATED BY SHADING

CY3 – FB 1 – _____ _____ _____ _____ _____ _____ _____ _____

- **CY3** — CY3 CYLINDER
- **FB** — FIXED UNIBODY
- **1** — RATING: 1 Dry / Damp
- **FINISH**: WH White (Powder Coat); BK Black (Powder Coat); AB Architectural Bronze (Powder Coat)[1]; CF Custom Finish[1,2]
- **BAFFLE FINISH**: WH White (Powder Coat); BK Black (Powder Coat); AB Architectural Bronze (Powder Coat)[1]; CF Custom Finish[1,2]
- **CRI / LED**: 80C 80+ CRI; 90C 90+ CRI; 97C 97+ CRI; 90W 90+ CRI
- **SOURCE LUMEN**: 25A 2503lm; 32A 3268lm; 20A 2145lm; 27A 2800lm; 19A 1919lm; 24A 2505lm; 13A 1360lm
- **CCT**: 1 2700K; 2 3000K; 3 3500K; 4 4000K; W Warm Dim
- **OPTIC**: 10 15°[3]; 20 25°; 30 40°; 40 60°
- **POWER SUPPLY**: CA2 120-277V 50Hz/60Hz 0-10V Analog; CE2 120V 50Hz/60Hz Electronic ELV Forward / Reverse Phase; RMT Remote Driver[4] (See Remote Power Supply, see page 2)
- **STANDARD EFFECTS DEVICE**: 40 Soft Focus Lens
- **OPTIONAL EFFECTS DEVICE**: 00 No Lens[5]; 20 Honeycomb Louver[5]; 30 Clear Glass Lens[5]; 50 Frosted Glass Lens; 60 Frosted Soft Focus Lens; 70 Frosted Linear Spread Lens

[1] Subject to increased lead time
[2] Powder coat only, no plated finishes; custom finishes assigned unique suffix upon receipt of order, consult factory for additional cost

[3] Not available with 90W13A Warm Dim, consult factory for details

[4] Reduces delivered output up to 12% on all lumen packages, 14% on Warm Dim

[5] Not available with 90W13A Warm Dim

MOUNTING OPTIONS - SELECT ONLY ONE (SEE PAGE 3 FOR MOUNTING PROVISION DETAILS)

ROUGH-IN
Concealed mounting plate

☐ **CY2/3 – JBMP**

OR

FINISH-OUT
3" or 4" junction box surface mount kit

☐ **CY2/3 – SMK – _____ – _____**

- **J-BOX**: 3/0 3" j-box; 4/0 4" j-box
- **FINISH**: WH White; BK Black; AB Architectural Bronze[1]; CF Custom Finish[2]

[1] Subject to increased lead time
[2] Powder coat only, no plated finishes; custom finishes assigned unique suffix upon receipt of order, consult factory for additional cost

OR

FINISH-OUT
Ceiling mount j-box for 3/4" EMT conduit (Dry / Damp location only)

☐ **CY3 – CMJB – 2I – 1T – _____ – 3/4**

- **FINISH**: WH White; BK Black; AB Architectural Bronze[1]; CF Custom Finish[1,2]
- **CONDUIT**: 3/4 3/4" conduit

[1] Subject to increased lead time
[2] Powder coat only, no plated finishes; custom finishes assigned unique suffix upon receipt of order, consult factory for additional cost

©2019 Lucifer Lighting Company
As part of its policy of continuous research and product development, the company reserves the right to change or withdraw specifications without prior notice.
[PH] +1-210-227-7329
[FAX] +1-210-227-4967

CYLINDER CY3-FB

ACCESSORIES

ALTERNATE BAFFLE AND EFFECTS DEVICE
Includes baffle with sealed lens. Must specify baffle finish.

- ☐ **RBA-CY3-**-HCL** Honeycomb Louver [5]
- ☐ **RBA-CY3-**-CGL** Clear Glass Lens [5]
- ☐ **RBA-CY3-**-SFL** Soft Focus Lens
- ☐ **RBA-CY3-**-FGL** Frosted Glass Lens
- ☐ **RBA-CY3-**-FSFL** Frosted Soft Focus Lens
- ☐ **RBA-CY3-**-FLSL** Frosted Linear Spread Lens

****** Baffle finish: Specify **WH** for white, **BK** for black or **AB** for architectural bronze.

[5] Not available with 90W13A Warm Dim

REPLACEMENT SUCTION TOOL
Included with each order (1 per 10 fixtures).

- ☐ **CY-SQ-TOOL-SUCTION** Baffle assembly removal tool

REPLACEMENT OPTICS
Interchangeable optics accessible by removing snoot.

- ☐ **RO-70-15-1** 15° optic [3]
- ☐ **RO-70-25-1** 25° optic
- ☐ **RO-70-40-1** 40° optic
- ☐ **RO-70-60-1** 60° optic

[3] Not Available with 90W13A Warm Dim, consult factory for details

BLANK OFF PLUG
For use with ceiling mount j-box.

☐ **CY3 – CMJB –** [3/4] **– PLG –** [ ]

- EMT SIZE: **3/4** 0.75" conduit plug
- FINISH: **WH** White; **BK** Black; **AB** Architectural Bronze [1]; **CF** Custom Finish [1,2]

[1] Subject to increased lead time
[2] Powder coat only, no plated finishes; custom finishes assigned unique suffix upon receipt of order, consult factory for additional cost

REMOTE POWER SUPPLY - REDUCES DELIVERED OUTPUT UP TO 12% ON ALL LUMEN PACKAGES, 14% ON WARM DIM

PS – **RMT** – [ ] – [ ]

- PS: CYLINDER REMOTE POWER SUPPLY
- RMT: INSTALLATION TYPE — **RMT** Remote
- SYSTEM CONFIGURATION [6]: **80C25A**, **80C32A**, **90W13A**, **90C20A**, **90C27A**, **97C19A**, **97C24A**
- INPUT VOLTAGE: **1** 120V 60Hz; **U** 120V-277V 50Hz/60Hz
- POWER SUPPLY: **L23** Lutron Forward Phase 2-Wire; **LH1** Lutron Hi-lume 1% EcoSystem with Soft-On, Fade-to-Black; **AN4** 0-10V Analog; **EA2** eldoLED 0-10V Analog, Loganthmic; **ED1** eldoLED DALI; **ND4** Non-Dimming [7]

[6] Must match system configuration selected for cylinder
[7] Not available with 90W13A Warm Dim

EMERGENCY LIGHTING - REMOTE MOUNT ONLY

- ☐ **EMB-S-20/25-120/277-LEDX** 20/25 watt max capacity, 120 or 277 VAC 60Hz
- ☐ **EMB-S-100-120-LEDX** 100 watt max capacity, 120 VAC 60Hz
- ☐ **EMB-S-100-277-LEDX** 100 watt max capacity, 277 VAC 60Hz
- ☐ **EMB-S-250-120/277-LEDX** 250 watt max capacity, 120 or 277 VAC 60Hz

During disruption of main power, emergency battery inverter provides temporary 120V or 277V to fixture.

©2019 Lucifer Lighting Company
As part of its policy of continuous research and product development, the company reserves the right to change or withdraw specifications without prior notice.
[PH] +1-210-227-7329
[FAX] +1-210-227-4967

[DATE OF REV: 053119]

TECHNICAL

CONSTRUCTION

Cylinder: Machined aluminum body; extruded aluminum internal heat-sink; painted finishes are granulated powder coat.
CY3-CMJB: Die-cast aluminum body; painted finishes are granulated powder coat.
Remote Power Supply: 22 Gauge galvanized steel.

LED

Proprietary Citizen 2 step MacAdam ellipse LED module available in 80+, 90+ and 97+ CRI configurations in color temperatures of 2700K, 3000K, 3500K and 4000K. Average rated lamp life of 50,000 hours. LED and driver assemblies are field-replaceable.

WARM DIM LED

Proprietary 3 step MacAdam ellipse warm dim LED module available in 90+ CRI configuration. 3200K at full brightness, warming to 1800K at full dim. Average rated lamp life of 50,000 hours. LED and driver assemblies are field-replaceable.

POWER SUPPLY PERFORMANCE AND DIMMING INFORMATION

Power Supply	CA2	CE2	L23	LH1	AN4	ND4	EA2	ED1
Minimum °C	-20 °C	-20 °C	0 °C	0 °C	-20 °C	-20 °C	-20 °C	-20 °C
Maximum °C	40 °C	40 °C	40 °C	40 °C	40 °C	40 °C	40 °C	40 °C
Dimming %	1.0%	1.0%	1.0%	1.0%	1.0%	1.0%	0.1%	0.1%

Note: For EA2 and L23 drivers consult chart on page 5 to confirm appropriate dimming curve for compatibility with selected control.

MOUNTING

Cylinder is supplied with a mounting adaptor plate, which integrates with required additional mounting accessories specified separately according to field application conditions, providing a minimalist transition from standard 3/0, 4/0, or 4" square junction boxes and accommodating ceiling thicknesses of 0.44" (7/16", 12mm) to 0.75" (3/4", 19mm). Ceiling-mount junction box available for 3/4" (19mm) conduit and feature concealed internal clamps for clean fitting-free conduit exit and entry.

LISTING

cTUVus listed to UL1598 standard for Dry / Damp locations. Title 24 JA8-2016 Listed.

WARRANTY

Manufacturer's 1-year warranty guarantees product(s) listed to be free from defects in material and workmanship under normal use and service. 5-year warranty on LED and power supply to operate with 70% of the original flux and remain within a range of 3 duv. 10-year Lutron Advantage limited warranty available on Lutron equipped systems. Warranty period begins from the date of shipment by Seller and conditional upon the use of manufacturer-supplied power supply. Consult website for full warranty terms and conditions.

©2019 Lucifer Lighting Company
As part of its policy of continuous research and product development, the company reserves the right to change or withdraw specifications without prior notice.

[PH] +1-210-227-7329
[FAX] +1-210-227-4967

CYLINDER CY3-FB

YS13

Lam Partners ARCHITECTURAL LIGHTING DESIGN

CYLINDER

A LUMINAIRE
Machined aluminum body with integrated heat sink and LED. Conceals hidden twist-on mounting hardware. Power supply may be integral or remote mount.

B OPTICS
Proprietary field-changeable optics available in 15°, 25°, 40° & 60° beams.

C EFFECTS DEVICES
Cylinder baffle lens assembly can accept 1 lens sealed in place; soft focus lens included as standard. Suction tool provided for removal of baffle lens assembly.

MOUNTING

D CY2/3-JBMP *
Mounting plate (concealed) for standard j-box. To be installed during rough-in prior to substrate. Fixture to mount flush with minimalist transition to ceiling.

E CY2/3-SMK-3/0-(finish) *
Surface mount kit includes mounting plate and 4" concealer plate that installs between fixture and standard 3" 3/0 j-box for existing applications where standard j-box cutout is to be concealed.

F CY2/3-SMK-4/0-(finish) *
Surface mount kit includes mounting plate and 5" concealer plate that installs between fixture and standard 4" 4/0 j-box for existing applications where standard j-box cutout is to be concealed.

G CY3-CMJB-2I-1T-(finish)-3/4
Ceiling mount junction box perfectly matches the cylinder profile for a continuous, integrated look where exposed ceiling mount junction box and conduit applications apply. For use with 3/4" EMT conduit only. Features two conduit entrances on either side and 1 conduit entrance on top of j-box. J-box is IP10 rated; painted finishes only. One blank off plug included; additional plugs may be ordered. Conforms to NYC code.

MOUNTING NOTES

* CY2/3-JBMP and CY2/3-SMK-3/0 & 4/0 not recommended for use with pancake style j-box.

DIMENSIONS / DRAWINGS

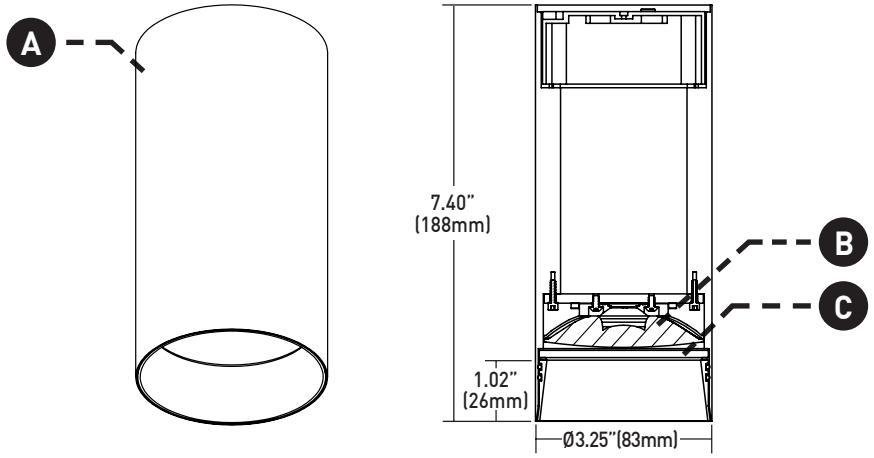

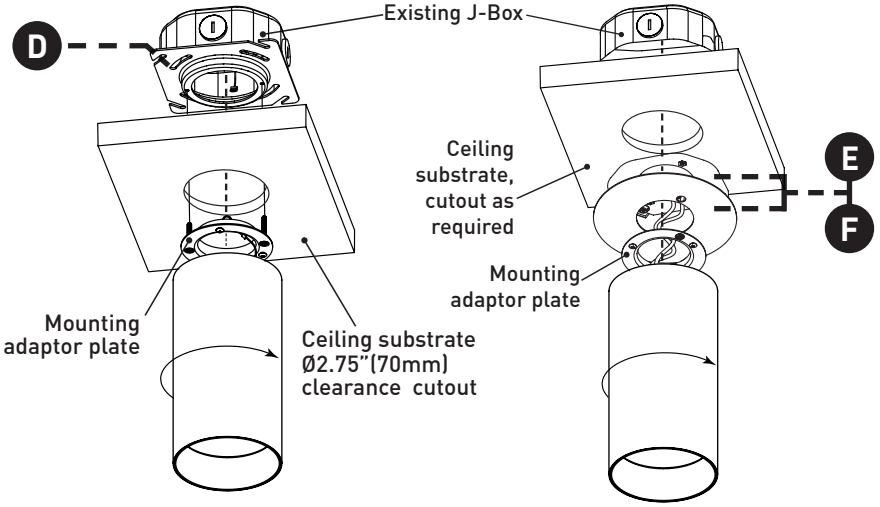

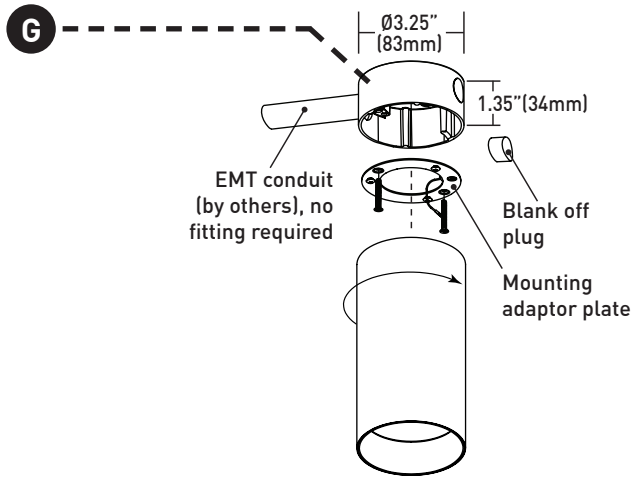

©2019 Lucifer Lighting Company
As part of its policy of continuous research and product development, the company reserves the right to change or withdraw specifications without prior notice.

[PH] +1-210-227-7329
[FAX] +1-210-227-4967

REMOTE POWER SUPPLY

H PS-RMT
Remote power supply provides additional driver options, see page 2 for selections. Mounting device still required. Consult factory for maximum allowable secondary run lengths between PS-RMT and cylinder.

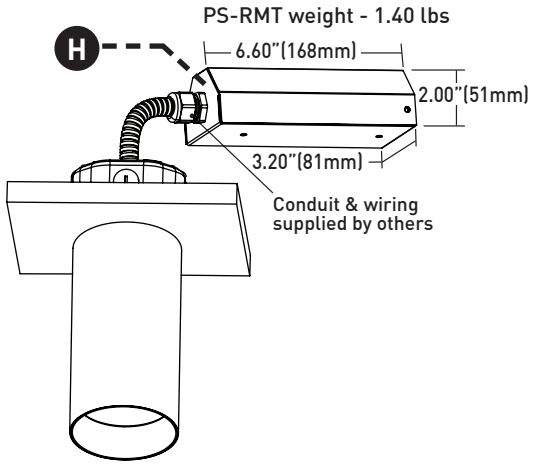

Fixture weight - 2.20 lbs

DIMMING COMPATIBILITY

eldoLED DRIVER COMPATIBILITY

Power supply **EA2** **Dimmer / Switch Control Manufacturer**	**Family/Model #**	**Recom-mended Curve**
Busch-Jaeger	2112U-101	Logarithmic
Jung	240-10	Logarithmic
Leviton Lighting Controls	IP710-DLX	Logarithmic
Lightolier Controls	ZP600FAM120	Logarithmic
Lutron Electronics	Nova T® - NTFTV	Linear
Lutron Electronics	Diva® - DVTV	Linear
Lutron Electronics	Nova® - NFTV	Linear
Merten	5729	Logarithmic
Pass & Seymour	CD4FB-W	Logarithmic
The Watt Stopper	DCLV1	Logarithmic
Sensor Switch	nIO EZ	Linear
Synergy	ISD BC	Logarithmic
Lighting Control Systems		
Lutron Electronics	GrafixEye® GRX-TVI w GRX3503	Linear
Lutron Electronics	Energy Savr Node™ - QSN-4T16-S	Linear
Lutron Electronics	TVM2 Module	Linear
Crestron®	GLX-DIMFLV8	Logarithmic
Crestron®	GLXP-DIMFLV8	Logarithmic
Crestron®	GLPAC-DIMFLV4-*	Logarithmic
Crestron®	GLPAC-DIMFLV8-*	Logarithmic
Crestron®	GLPP-DIMFLVEX-PM	Logarithmic
Crestron®	GLPP-1DIMFLV2EX-PM	Logarithmic
Crestron®	GLPP-1DIMFLV3EX-PM	Logarithmic
Crestron®	DIN-AO8	Logarithmic
Crestron®	DIN-4DIMFLV4	Logarithmic
Crestron®	CLS-EXP-DIMFLV	Logarithmic
Crestron®	CLCI-1DIMFLV2EX	Logarithmic
ABB	SD/S 2.16.1	Logarithmic

LUTRON DRIVER COMPATIBILITY

Power supply **L23 Product Family**	**Part No.**	**Fixtures Per Control (120V only)**
Maestro WirelessR 600 W dimmer	MRF2-6ND-120-	1-8
Maestro WirelessR 1000 W dimmer	MRF2-10ND-120-	1-13
Caséta® Wireless Pro 1000 W dimmer	PD-10NXD-	1-13
GRAFIK T™ CL® dimmer	GT-250M-, GTJ-250M-	1-10
HomeWorks® QS adaptive dimmer	HQRD-6NA-	1-8
HomeWorks® QS 600 W dimmer	HQRD-6ND-	1-8
HomeWorks® QS 1000 W dimmer	HQRD-10ND-	1-13
RadioRA® 2 adaptive dimmer	RRD-6NA-	1-8
RadioRA® 2 1000 W dimmer	RRD-10ND	1-13
myRoom™ DIN power module	MQSE-4A1-D	1-6 (per output), 1A max driver input current
HomeWorks® QS DIN power module	LQSE-4A1-D	1-6 (per output), 1A max driver input current
HomeWorks® QS wallbox power module	HQRJ-WPM-6D-120	2-10 (per output), 26 total per module
HomeWorks® wallbox power module	HWI-WPM-6D-120	2-10 (per output), 26 total per module
GRAFIK Eye® QS control unit	QSGR-, QSGRJ-	2-10 (per output), 26 total per module
GRAFIK Eye® 3000 control unit	GRX-3100-, GRX-3500-	2-10 (per output), 26 total per module
RPM-4U module (LCP, HomeWorks® QS, GRAFIK Systems™, Quantum®)	HW-RPM-4U-120, LP-RPM-4U-120	2-26 (per output), 26 total per module
RPM-4A module (LCP, HomeWorks® QS, GRAFIK Systems™, Quantum®)	HW-RPM-4A-120, LP-RPM-4A-120	1-13 (per output), 26 total per module
GP dimming panels	Various	1-26
Ariadni CL 250W dimmer	AYCL-253P-	1-8
Diva CL 250W dimmer	DVCL-253P- DCSCCL-253P-	1-8
Nova T CL 250W dimmer	NTCL-250-	1-10

LUTRON
2016 OEM ADVANTAGE ACCOUNT

©2019 Lucifer Lighting Company
As part of its policy of continuous research and product development, the company reserves the right to change or withdraw specifications without prior notice.

[PH] +1-210-227-7329
[FAX] +1-210-227-4967

YW3
Lam Partners

OW2480 – PASSAGE™
Mullion Mount with Remote Power Supply

VISA LIGHTING

Type: Project: VisaLighting.com/products/Passage

Fill in shaded boxes using information listed below

Order Code:	OW2480		–	MVOLT					
	MODEL	Ⓐ SOURCE		VOLTAGE	Ⓑ OPTIC OPTION		Ⓒ FINISH		Ⓓ OPTION

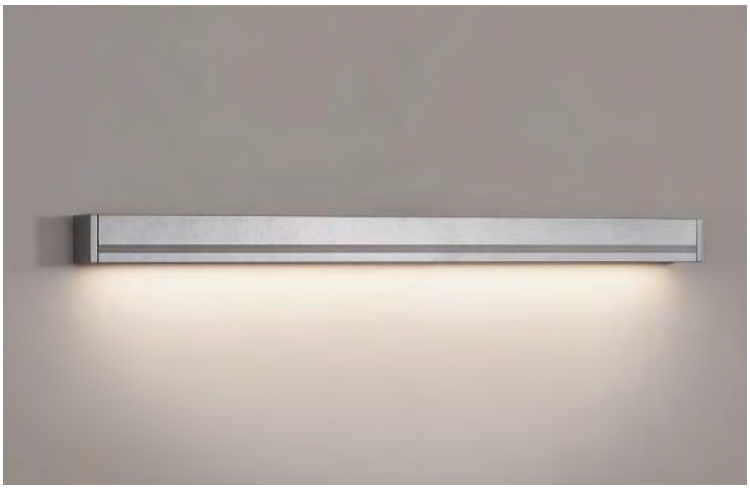

Passage is a sleek outdoor fixture for mounting horizontally over doorways, on facades, along paths of egress and window mullions.

DIMENSIONS

Depth is measured from wall to front of fixture

L = Length H = Height D = Depth

L	37-1/4″	(946 mm)
H	2-1/2″	(64 mm)
D	2-1/2″	(64 mm)

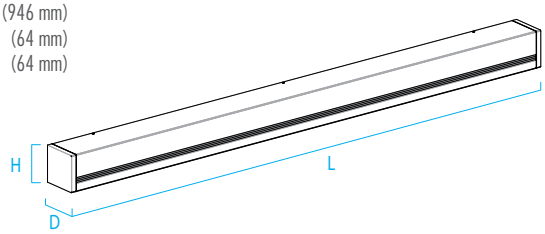

MULLION MOUNTING DETAIL

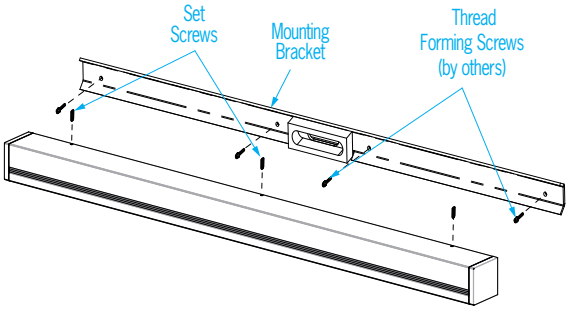

Ⓐ SOURCE (Select one) and VOLTAGE

MVOLT fixture accepts 120 through 277 input voltage
Dimmable 0-10V to 1%
82CRI, within 3-step MacAdam

Source	CCT	FT Delivered Lumens	LUM Delivered Lumens	Power (Watts)	Voltage
L30K-L	3000K	900	650	14	**MVOLT**
L35K-L	3500K				
L40K-L	4000K				
L30K-H	3000K	2700	1900	40	
L35K-H	3500K				
L40K-H	4000K				

Ⓑ OPTIC OPTION (Select one)

LUM Luminous Lens **FT** Forward Throw Optic

Ⓒ FINISH OPTIONS (Select one trim finish)

See page 3 for color chart

Powder Coat Painted Finishes (Standard)

AG7038	Agate Grey	**GLIM**	Glimmer	**PB1035**	Pearl Beige
BMAT	Bronze Matte	**GSIL**	Graphite Silver	**RUST**	Rust
BRNZ	Bronze	**GW9002**	Grey White	**SUNG**	Sungold
BSIL	Blade Silver	**HTHR**	Heather	**TW9016**	Traffic White
CVBL	Cove Blue	**JB9005**	Jet Black		
CW9001	Cream	**OBRZ**	Old Bronze		

Wood Sublimated Metal Finishes (Premium)

MCA Mediterranean Cherry Metal Based Wood Alternative
NOA Natural Oak Metal Based Wood Alternative

Ⓓ OPTION

⚠ Option availability may be interdependent with Voltage, Source or Other Options

DS Dual circuit switching (includes 2 drivers).
Lumen output and wattage is split in half for each circuit

IP65 Rated · LED · ADA Compliant · ETL Listed · 5 Year Warranty

OW2480 – PASSAGE
Mullion Mount with Remote Power Supply

VISA LIGHTING

Photometrics

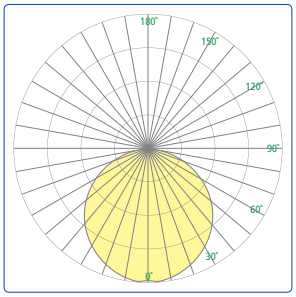

LUM (Luminous Lens)

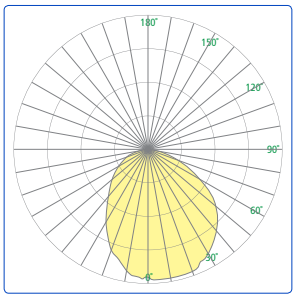

FT (Forward Throw Optic)

Technical Information

- Modular design for replacement of the LED source and power supply
- High or low lumen output options
- Light Engines by Visa Lighting
- Luminous or Forward Throw output
- Remote power supply included (suitable for indoor, Type IC)
- Orient as uplight or downlight
- Optional dual circuit switching
- IP65 rated
- Bracket mounting system simplifies installation and maintenance
- Window mullion mount; minimum mullion width 2.5″
- Tamper resistant fasteners
- Polycarbonate diffuser
- No VOC powder coat paint finish; metal based sublimated wood look finish
- ETL Listed for wet location mounting 4′ above grade

Relative Scale Drawing

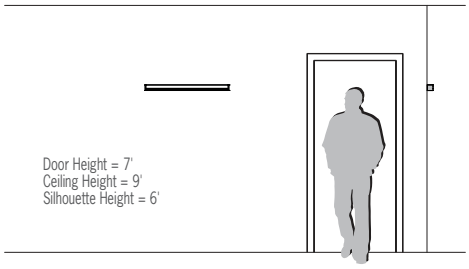

Path of Egress – Luminous Lens

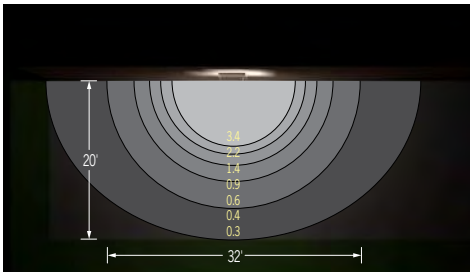

OW2482 –H Downlight, Mounted at 10′ AFF, .70 light loss factor used

Path of Egress – Forward Throw

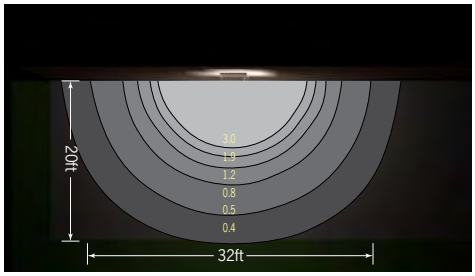

OW2482 –H Downlight, Mounted at 10′ AFF, .70 light loss factor used

Wood Sublimated Metal Finish



Remote Power Supply Enclosure

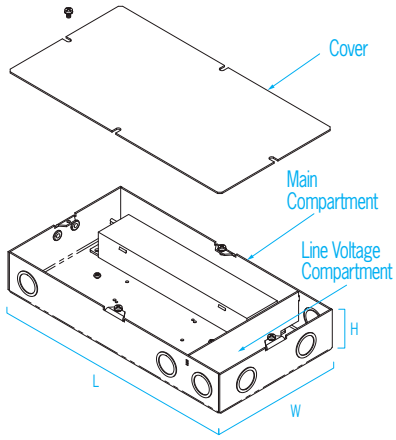

L	12″	(305 mm)
W	6-3/8″	(162 mm)
H	2″	(51 mm)

YW3
Lam Partners ARCHITECTURAL LIGHTING DESIGN

OW2480 – PASSAGE
Mullion Mount with Remote Power Supply

VISA LIGHTING

Specify color code when ordering. For accurate color matching, individual paint and finish samples are available upon request
For additional information see VisaLighting.com/materials-finishes

Painted Finishes (Standard)

TW9016
Traffic White (RAL9016)

CW9001
Cream (RAL9001)

GW9002
Grey White (RAL9002)

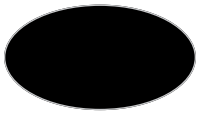

JB9005
Jet Black (RAL9005)



AG7038
Agate Grey (RAL7038)



HTHR
Heather



CVBL
Cove Blue



BSIL
Blade Silver



GSIL
Graphite Silver



GLIM
Glimmer



SUNG
Sungold



BRNZ
Bronze



OBRZ
Old Bronze



BMAT
Bronze Matte



PB1035
Pearl Beige (RAL1035)



RUST
Rust

Wood Sublimated Metal Finishes (Premium)



MCA
Mediterranean Cherry
Metal Based
Wood Alternative



NOA
Natural Oak
Metal Based
Wood Alternative

This document contains information which is the property of Visa Lighting, and may not, in whole or in part, be duplicated, disclosed, or used for design or manufacturing purposes without the prior written permission of Visa Lighting. ©Visa Lighting. Design Modification Rights Reserved.

ERCO

Kona XS Projector

YW5

Lam Partners
ARCHITECTURAL LIGHTING DESIGN



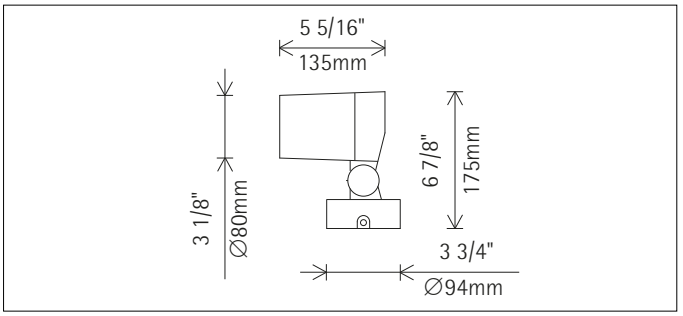

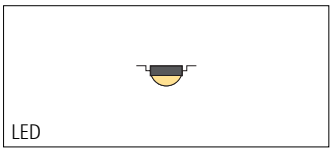

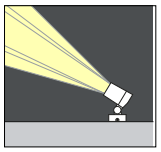

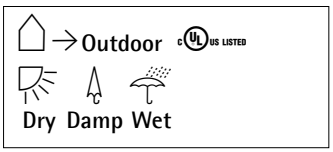

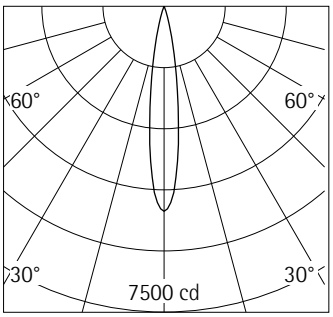

h(ft)	E(fc)	D
		16°
6	140	1'8"
12	35	3'4"
18	16	5'1"
24	9	6'9"
30	6	8'5"

34832.023 Graphit m
LED 6W 630lm 3000K warm white
Switchable
Version 4
Spherolit lens, spot

Product description
Housing, hinge and mounting plate: corrosion-resistant aluminum, No-Rinse surface treatment. Double powder-coated. Optimized surface for reduced accumulation of dirt. Hinge with internal wiring, 130° tilt. Mounting plate rotatable through 350°.
Control gear 120V/277V, 60Hz. 1 cable entry. 3 terminals
LED module: high-power LEDs on metal-core PCB. Collimating lens made of optical polymer.
Luminaire head with non-reflective safety glass: corrosion-resistant aluminum, double powder-coated. Internal anti-glare cone, polymer, black.
Suitable for wet location (IP65): dust-proof and water jet-proof.
Weight 2.43lbs / 1.10kg
Housing temperature 99°F / 37°C
Maximum wind load area 0.18ft^2 / 0.017m^2
Version with 3000K CRI 95 or 2700K, 3500K, 4000K CRI 92 available on request.

Technical data

Luminous flux of the luminaire	520lm
Connected load	8.0W
Luminaire efficacy	65lm/W
Color deviation	1.5 SDCM
Color rendition index	CRI 92
Lumen maintenance (LED manufacturer specifications)	L90/B10 ≤50000h L90 ≤100000h
LED failure rate	0.1% ≤50000h
LMF	E
Temperature on the cover glass	99°F / 37°C

For your regional contact in the ERCO Sales network click here
www.erco.com/contact

Technical region: 120V/60Hz, 277V/60Hz
We reserve the right to make technical and design changes.
Edition: 20.02.2019
Current version under
www.erco.com/34832.023

© ERCO GmbH 2019

Kona XS Projector

Planning data

Cleaning (a)	1				2				3			
Ambient conditions	P	C	N	D	P	C	N	D	P	C	N	D
LMF	0.96	0.94	0.90	0.86	0.93	0.91	0.86	0.81	0.92	0.90	0.84	0.79
RSMF	0.99	0.97	0.95	0.92	0.98	0.97	0.95	0.92	0.98	0.97	0.95	0.92

Hours of operation (h)	1000	5000	10000	20000	30000	40000	50000
LLMF	1.00	0.99	0.98	0.96	0.94	0.92	0.90
LSF	1	1	1	1	1	1	1

MF	LMFxRSMFxLLMFxLSF
MF	Maintenance Factor
LMF	Luminaire Maintenance Factor
RSMF	Room Surface Maintenance Factor
LLMF	Lamp Lumens Maintenance Factor
LSF	Lamp Survival Factor
P	Room pure
C	Room clean
N	Room normal
D	Room dirty

Technical data based on international standards and directives

IEC 60598	Luminaires – Parts 1 + 2: General requirements, particular requirements and tests
IEC 62031	LED modules for general lighting – Safety specifications
IEC 62471	Photobiological safety of lamps and lamp systems
UL 1598	Luminaires
UL 1574	Standard for Track Lighting Systems
UL 8750	Standard for Light Emitting Diode (LED) Equipment for Use in Lighting Products
IES LM-79-08	Electrical and Photometric Measurements of Solid-State Lighting Products
IES LM-80-08	Measuring Lumen Maintenance of LED Light Sources
CIE 13	Method of measuring and specifying color rendering properties of light sources

All technical data are subject to industry standard tolerances.
See also www.erco.com/erco-led

Kona XS Projector

Accessories



33973.000
Ground spike
Metal, hot-dip galvanised.
Cable entry.
Weight 1.06lbs / 0.48kg

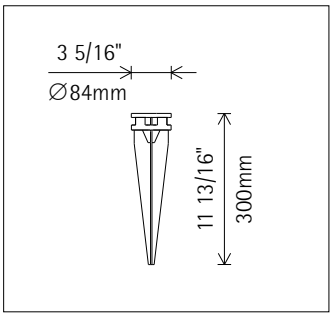



34853.000
Mounting plate
Corrosion-resistant cast aluminum, No-Rinse surface treatment. Graphit m, double powder-coated.

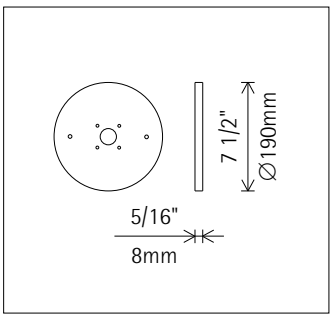

Specification Sheet

lumenbeam

Large

WHITE AND STATIC COLOURS

Project Name _____ **Qty** _____

Type _____ **Catalog / Part Number** _____





Front view

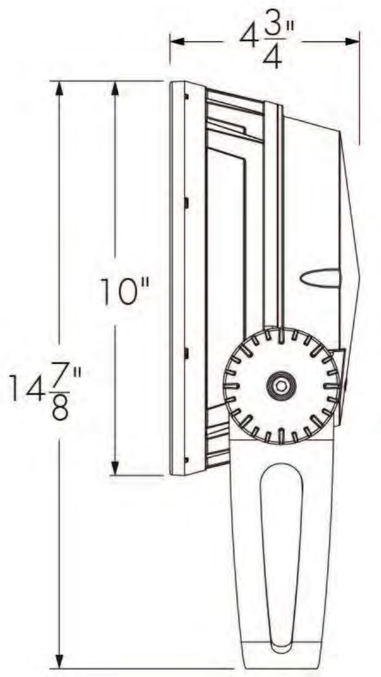

Side view

Photometric Summary

4000K	Delivered output (lm)	Intensity (peak cd)
VN	3,271	144,794
NS	2,896	98,556
NF	2,673	19,635
FL	2,692	7,448
WFL	2,623	2,480

Photometric performance is measured in compliance with IESNA LM-79-08.

Optics

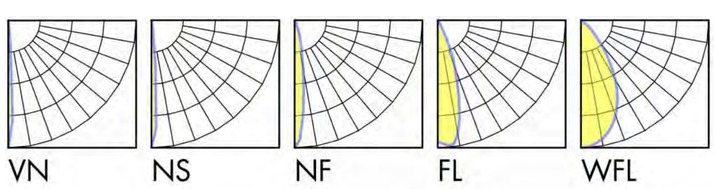

Control

ON/OFF 1-10V DALI

lumentalk DMXrdm EcoSystem Enabled

Rating

c UL us CE RoHS

Description

The Lumenbeam Large is a high-performance, 50W luminaire for solving complex lighting challenges such as multi-story building exteriors. It offers a wide array of options including a choice of optics for floodlighting or accent lighting; a number of colour temperatures and colours; various mounting options, accessories, spread lenses and controls.

Features

Colour and Colour Temperature	2200K, 2700K, 3000K, 3500K, 4000K, 5700K, Red, Green, Blue
Optics (nominal distribution)	6°, 10°, 20°, 40°, 60°
Optical Option	Linear spread lens horizontal distribution, Linear spread lens vertical distribution
Options	Short Yoke, 3G ANSI C136.31 Vibration Rating for bridge applications, Corrosion-resistant coating for hostile environments
Power Consumption	50 W
Warranty	5-year limited warranty

Performance

Delivered Output	3,271 lm (4000K, VN optic)
Delivered Intensity	144,794 cd at nadir (4000K, VN optic)
Illuminance at Distance	Minimum 1 fc at 381 ft distance (4000K, VN optic)
Colour Consistency	2 SDCM
Colour Rendering	CRI 80+
Lumen Maintenance	L70 120,000 hrs (Ta 25 °C)

lumenpulse™ 11/13 Weston Street, Unit no 13.3.2 London, SE1 3ER GB **T** +44 (0) 2031 765370 info@lumenpulse.com **www.lumenpulsegroup.com**

Lumenpulse Group Inc. reserves the right to make changes to this product at any time without prior notice and such modification shall be effective immediately
2017.11.28 copyright © 2017 Lumenpulse Group Inc.
MG - R38

Specification Sheet

lumenbeam

Large

WHITE AND STATIC COLOURS

Physical

Housing Material	Low copper content high pressure die-cast aluminium
Yoke Material	Heavy aluminium (standard yoke included)
Lens Material	Clear tempered glass
Hardware Material	Stainless steel
Gasket Material	Silicone
Surface Finish	Electrostatically applied polyester powder coat
Weight	12 lbs
EPA	Front = 0.94 sq ft, Side = 0.56 sq ft

Electrical and control

Voltage	100 to 277 volts
Fixture Cable	Power and data in 1 cable, 3 ft cord standard (5 x 1.5 sq mm), other lengths available
Inrush Current (peak)	55A @230VAC
Resolution (DMX/RDM)	Per fixture, 8-bit or 16-bit
Control	On/Off control, Lumentalk, 1-10V dimming, DALI dimming, Lutron® EcoSystem® Enabled dimming, DMX/RDM enabled

Environmental

Operating Temperature	-13 °F to 122 °F
IP Rating	IP66
IK Rating	IK10

Accessories (order separately)

Control Boxes	Power and control box - daisy chain configuration, Power and control box - star configuration
Control Systems	Lumentouch 2.0™, Lumencue
Diagnostic and Addressing Tools	LumenID, LumentalkID

Lumenpulse Group Inc. reserves the right to make changes to this product at any time without prior notice and such modification shall be effective immediately
2017.11.28 copyright © 2017 Lumenpulse Group Inc.
MG - R38

Specification Sheet

lumenbeam

Large

WHITE AND STATIC COLOURS

Mounting options

SY - Short yoke

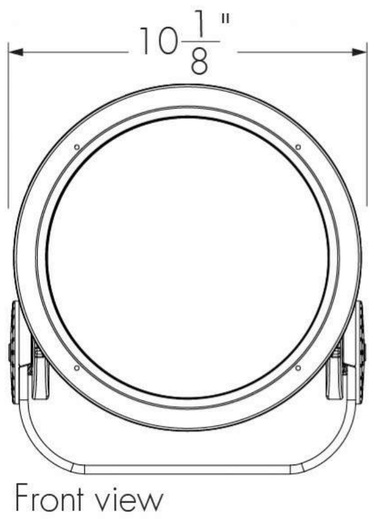

Front view

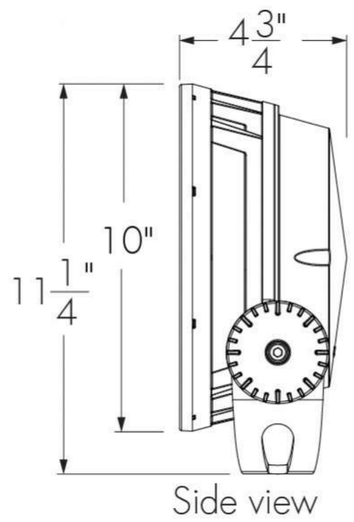

Side view

Mounting details

Mounting hole pattern - standard and short yoke

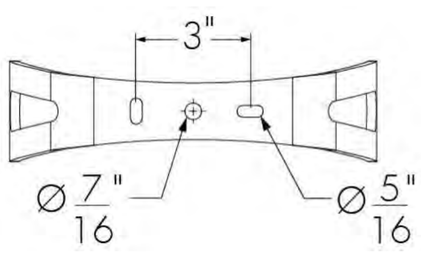

Adjustable pivot limits

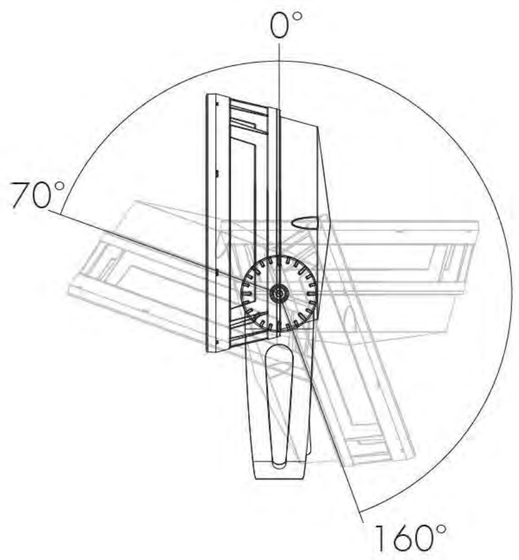

Standard yoke

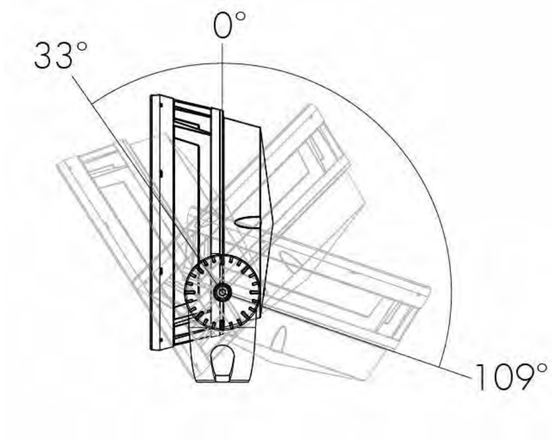

Short yoke

Optical options

LSLH - Linear spread lens horizontal distribution
LSLV - Linear spread lens vertical distribution

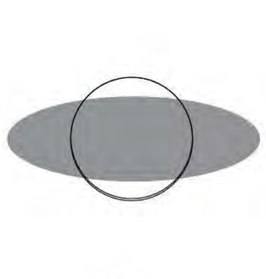

LSLH



LSLV

	Beam angle with LSLH/LSLV
VN	8° x 60°
NS	9° x 60°
NF	18° x 65°
FL	32° x 72°

Factory installed, not adjustable on site. Not available for WFL optic.
See 'Optical Accessories' section for field adjustable spread lens (LSLA).

Lumenpulse Group Inc. reserves the right to make changes to this product at any time without prior notice and such modification shall be effective immediately
2017.11.28 copyright © 2017 Lumenpulse Group Inc.
MG - R38

Specification Sheet

lumenbeam

Large

WHITE AND STATIC COLOURS

Mounting accessories (order separately)

Round pole mounting accessory

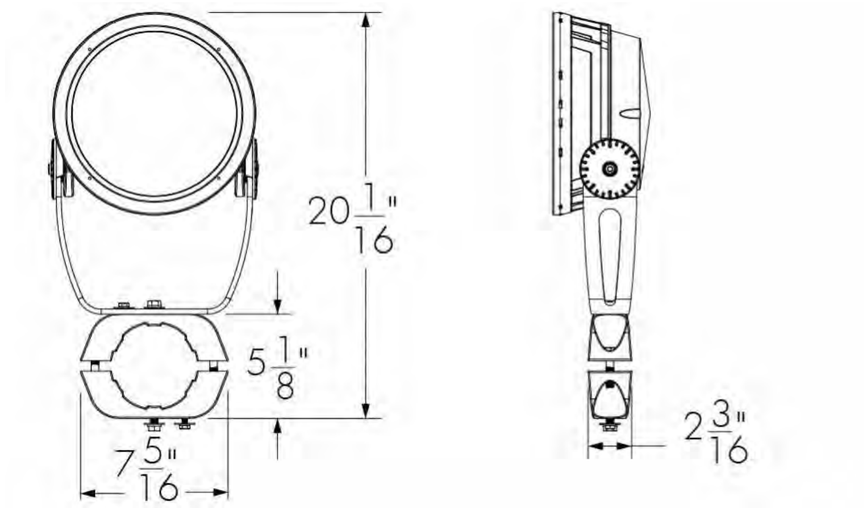

PM4 model shown.
Consult factory for square pole section.

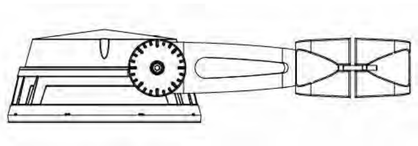

PM4-1, PM4.5-1, PM5-1 - Round pole mounting accessory - single fixture

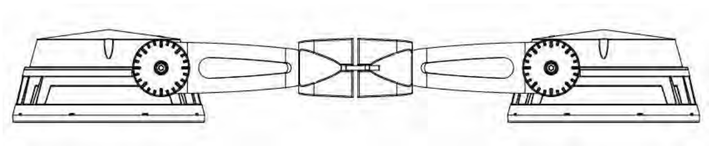

PM4-2, PM4.5-2, PM5-2 - Round pole mounting accessory - twin fixures
*One bracket assembly is supplied per 2 fixtures unless otherwise specified.

	PM4	PM4.5	PM5
For pole Ø	4" ± 1/16"	4.5" ± 1/16"	5" ± 1/16"

Consult factory for other pole diameters.

Tenon adapter

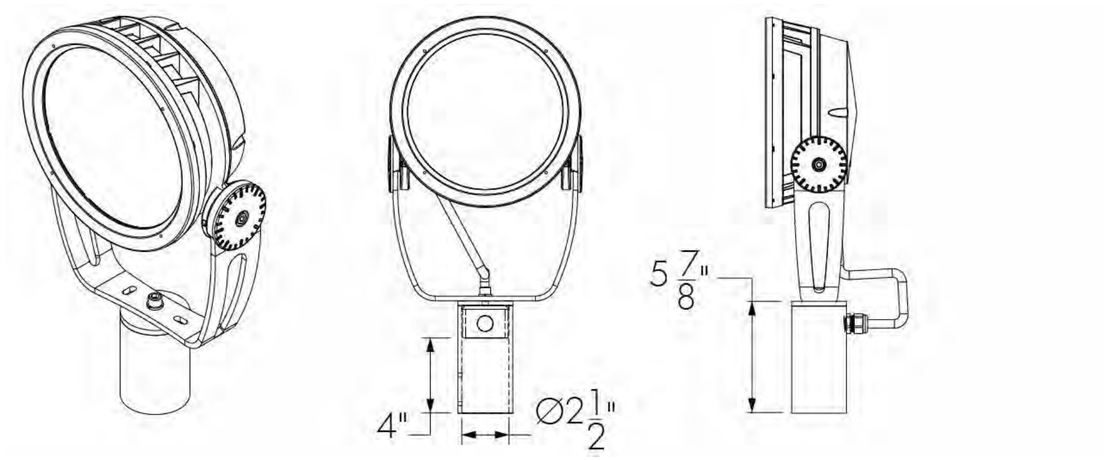

TN2 - Tenon adapter to fit on 2 3/8 in O.D. tenon

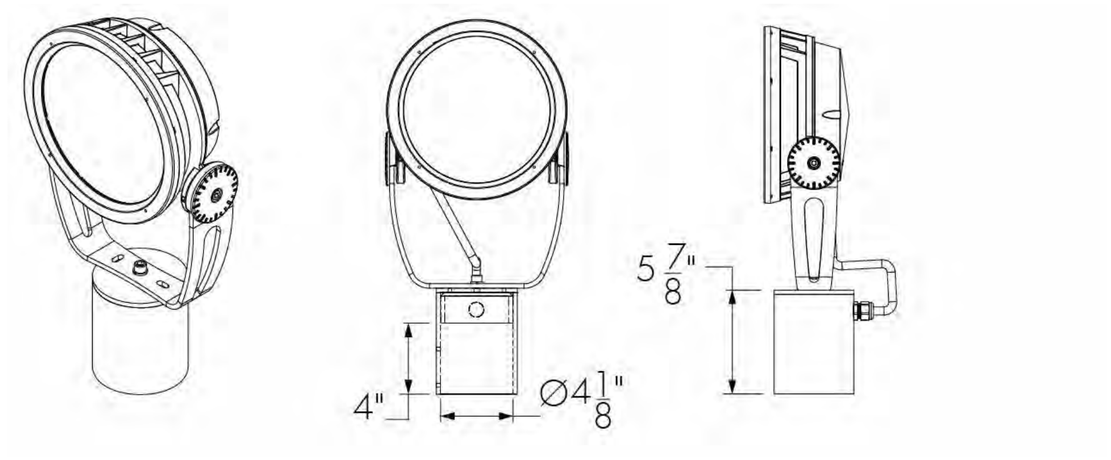

TN4 - Tenon adpater to fit on 4 in O.D. tenon

Lumenpulse Group Inc. reserves the right to make changes to this product at any time without prior notice and such modification shall be effective immediately
2017.11.28 copyright © 2017 Lumenpulse Group Inc.
MG - R38

Specification Sheet

lumenbeam

Large

WHITE AND STATIC COLOURS

Optical accessories (order separately)

Installed optical accessories will affect the maximum pivot limits for each mounting option, consult factory for details.

SN - Snoot

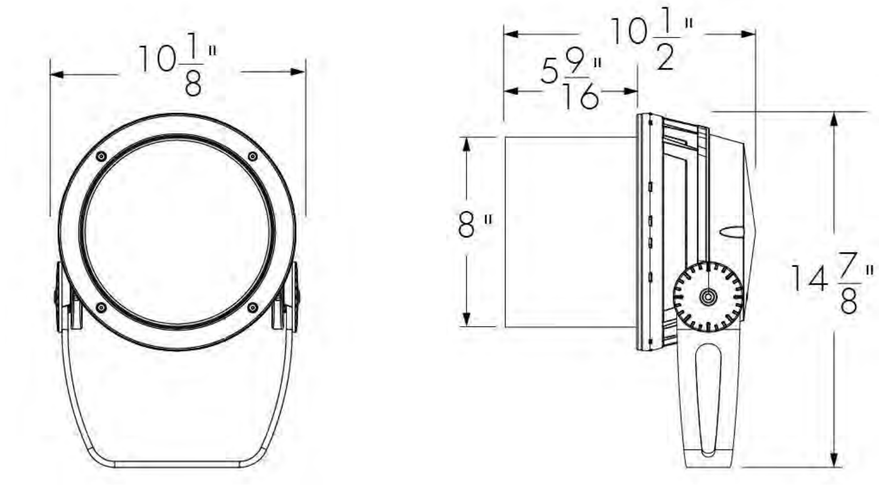

LBLSN-FINISH-BK
Interior surface painted black. Please specify desired exterior FINISH from list of available finishes.

SNW - Snoot wide

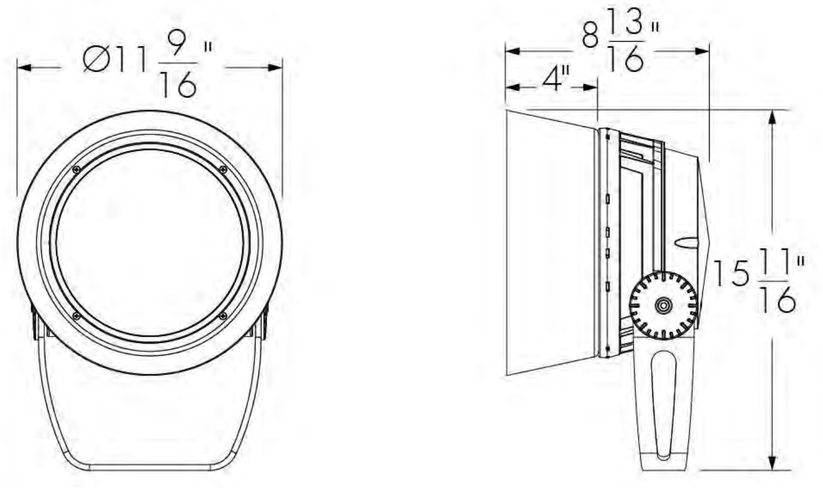

LBLSNW-FINISH-BK
Interior surface painted black. Please specify desired exterior FINISH from list of available finishes.

VS - Visor

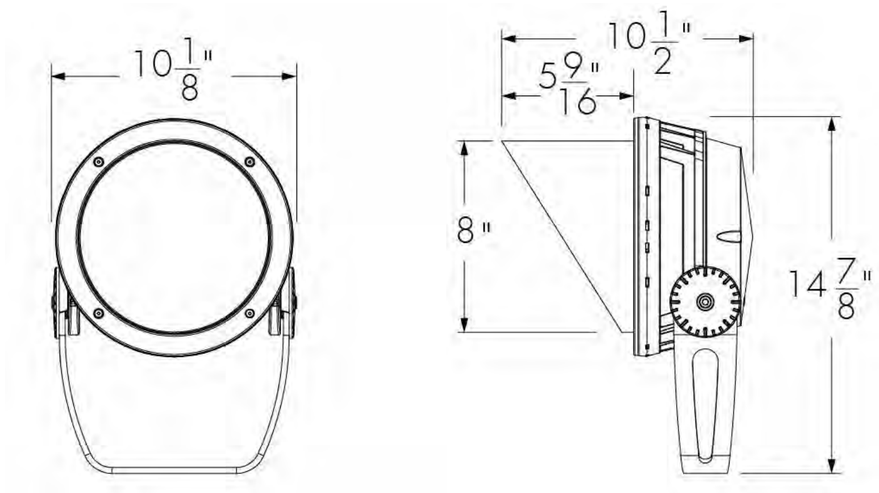

LBLVS-FINISH-BK
Interior surface painted black. Please specify desired exterior FINISH from list of available finishes.

LSLA - Linear spread lens adjustable

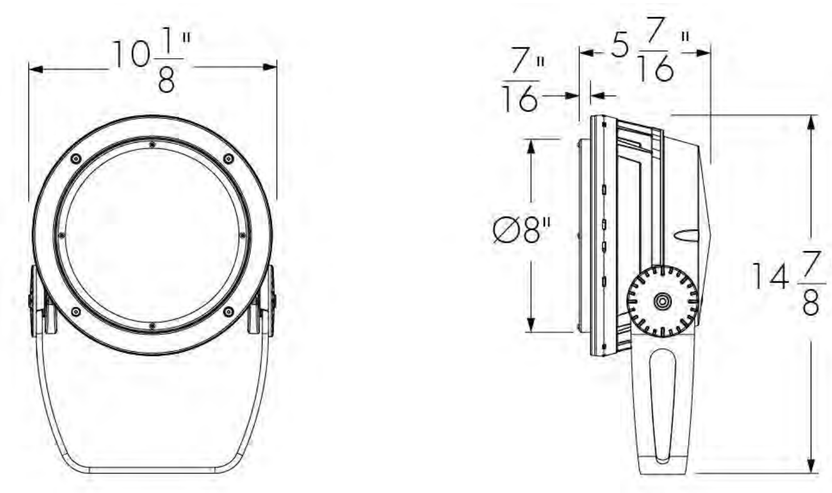

LBLLSLA-FINISH
Please specify desired exterior FINISH from list of available finishes.

WG - Wire guard

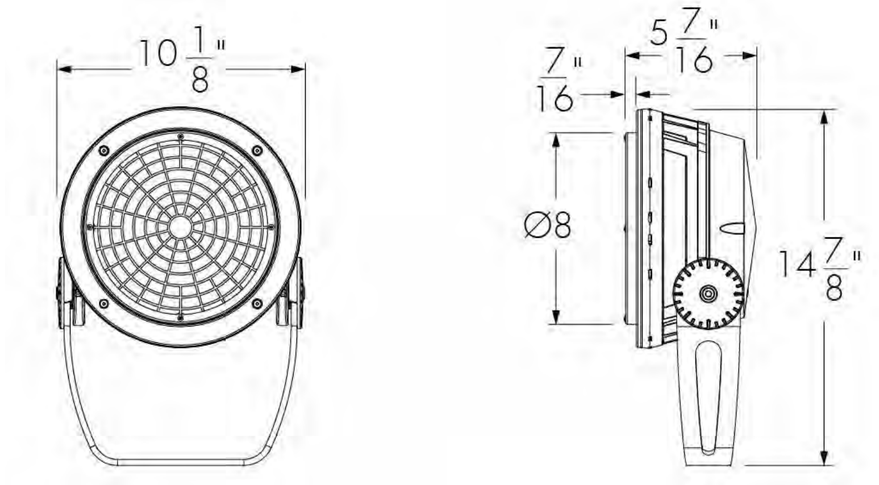

LBLWG-FINISH
Please specify desired exterior FINISH from list of available finishes.

Accessory combinations

+	Snoot	Snoot wide	Visor
Linear spread lens adjustable	YES	NO*	YES
Wire guard	YES	NO	YES

Accessory combinations must be ordered together on a single line
Ex: A snoot + wire guard combination order code is LBLSNWG-BK-BK.
*Consult factory for a linear spread lens adjustable + snoot wide combination.

lumenpulse™ 11/13 Weston Street, Unit no 13.3.2 London, SE1 3ER GB **T** +44 (0) 2031 765370 info@lumenpulse.com **www.lumenpulsegroup.com**

Lumenpulse Group Inc. reserves the right to make changes to this product at any time without prior notice and such modification shall be effective immediately
2017.11.28 copyright © 2017 Lumenpulse Group Inc.
MG - R38

Specification Sheet

lumenbeam

Large

WHITE AND STATIC COLOURS

Available exterior finishes for optical accessories

BK - Black Sandtex®
BRZ - Bronze Sandtex®
SI - Silver Sandtex®
WH - Smooth white
BKTX - Textured black
BRZTX - Textured bronze, non-metallic
GRATX - Textured medium grey
GRNTX - Textured green
WHTX - Textured white
CC - Custom colour and finish (please specify RAL colour)*

*Lumenpulse offers a wide selection of RAL CLASSIC (K7) colours with a smooth texture and high-gloss finish. Please consult factory for a list of available K7 colours, other RAL textures and glosses, or to match alternate colour charts. Final colour matching results may vary.

lumenpulse™ 11/13 Weston Street, Unit no 13.3.2 London, SE1 3ER GB **T** +44 (0) 2031 765370 info@lumenpulse.com **www.lumenpulsegroup.com**

Lumenpulse Group Inc. reserves the right to make changes to this product at any time without prior notice and such modification shall be effective immediately
2017.11.28 copyright © 2017 Lumenpulse Group Inc.
MG - R38

Specification Sheet

lumenbeam

Large

WHITE AND STATIC COLOURS

Typical wiring diagrams

Wiring colour code

CE Colour Code	USE
Yellow/Green Brown Blue Black Grey	Ground Live 100-277V Neutral 1-10V / Data + 1-10V / Data -

CE Class II Colour Code	USE
Brown Blue Black 1 Black 2 Grey	Live 100-277V Neutral Signal common (DMX/RDM only) 1-10V / Data + 1-10V / Data -

On/Off control (NO)

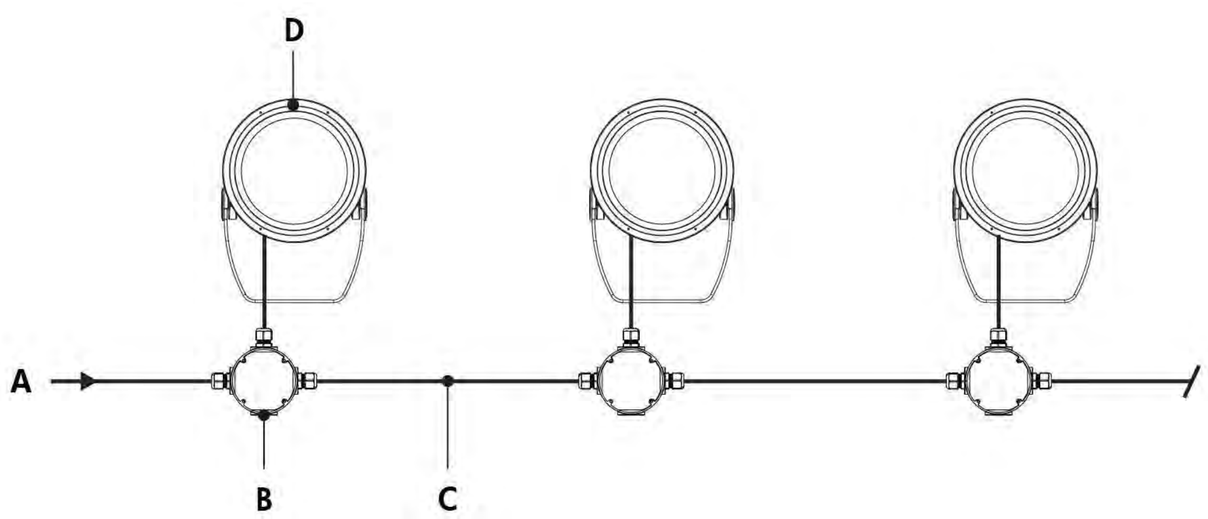

A - Power input (100-277V)
B - Junction box (by others)
C - Power wiring (by others)
D - Lumenbeam Large

On/Off control (NO) - wiring detail - CE

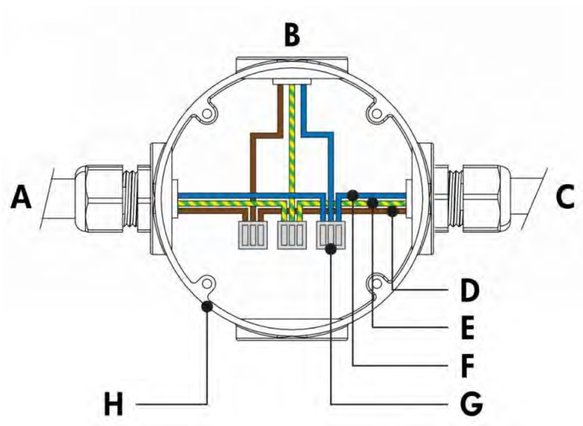

A - Power input or from previous fixture
B - To fixture
C - To next fixture
D - Live
E - Ground
F - Neutral
G - Terminal connector (by others)
H - Junction box (by others)

On/Off control (NO) - wiring detail - CE Class II option

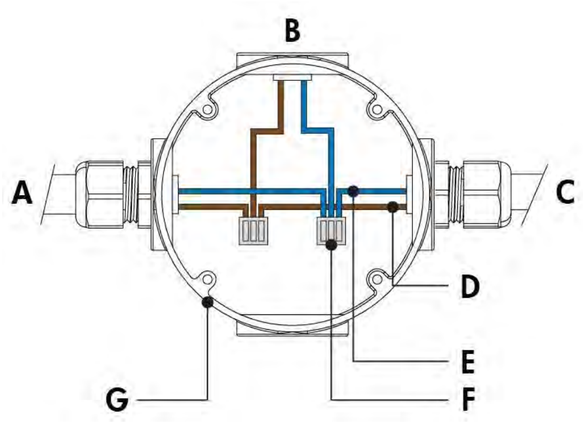

A - Power input or from previous fixture
B - To fixture
C - To next fixture
D - Live
E - Neutral
F - Terminal connector (by others)
G - Junction box (by others)

- Consult factory for specific applications and maximum fixture count/cable length recommendations.
- 50 watts per fixture.

Lumenpulse Group Inc. reserves the right to make changes to this product at any time without prior notice and such modification shall be effective immediately
2017.11.28 copyright © 2017 Lumenpulse Group Inc.
MG - R38

Specification Sheet

lumenbeam

Large

WHITE AND STATIC COLOURS

Lumentalk (LT)

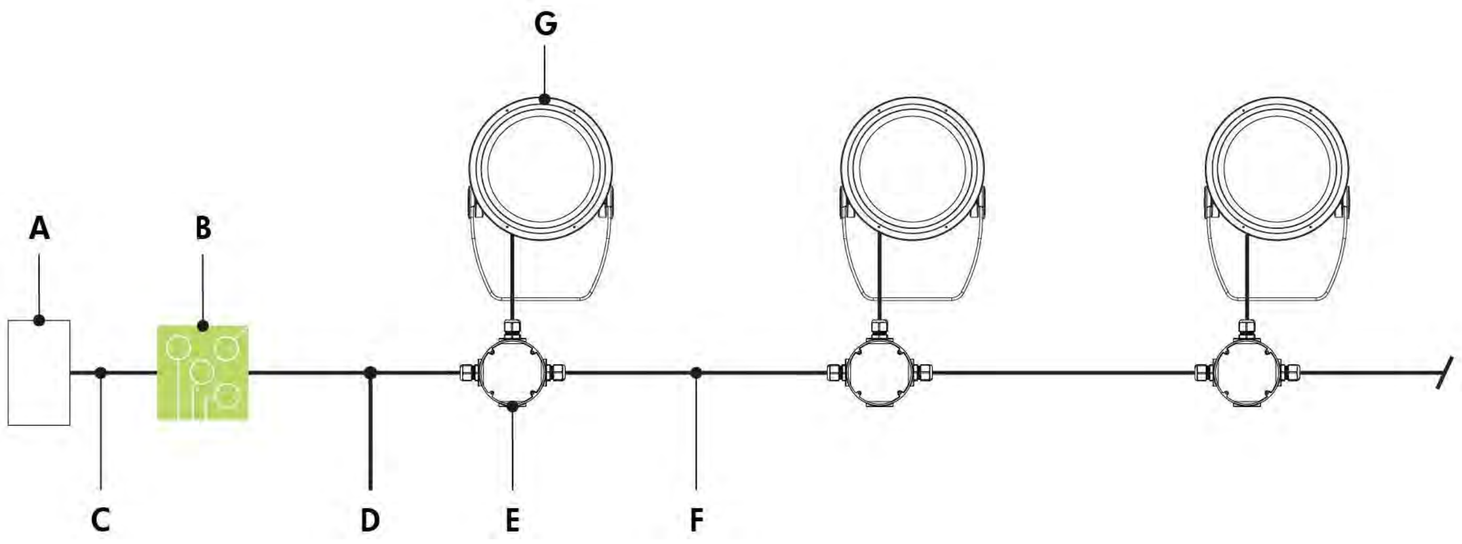

A - Third party dimmer/controller
B - Lumentranslator (LTL-010, -DMX, -TRIAC, -DALI)
C - Data wiring (by others)
D - Power line (120-277V AC)
E - Junction box (by others)
F - Power wiring (by others)
G - Lumenbeam Large

Lumentalk (LT) - wiring detail

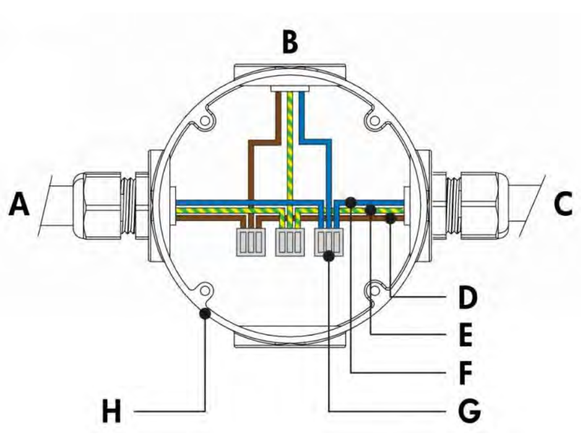

A - Power input (control over power line via Lumentalk system) or from previous fixture
B - To fixture
C - To next fixture
D - Live
E - Ground
F - Neutral
G - Terminal connector (by others)
H - Junction box (by others)

- Consult factory for specific applications and maximum fixture count/cable length recommendations.
- Lumentalk enabled fixtures must be commissioned using LumentalkID software and a LID-LT. Consult factory for details.
- Maximum of 1 transmitter (Lumentranslator or Lumenlink) per system.
- No third party fixtures allowed on the same circuit.
- For DMX applications: 1 DMX controller per Lumentalk network, maximum of 48 DMX channels per Lumentalk network (minimum step transition update rate is 1 second, minimum fade time between two colours is 1 minute). Consult factory for applications that require additional capabilities.
- Consult factory for DALI Lumentalk applications.
- 1% minimum dimming value.
- 50 watts per fixture.

lumenpulse™ 11/13 Weston Street, Unit no 13.3.2 London, SE1 3ER GB **T** +44 (0) 2031 765370 info@lumenpulse.com **www.lumenpulsegroup.com**

Lumenpulse Group Inc. reserves the right to make changes to this product at any time without prior notice and such modification shall be effective immediately
2017.11.28 copyright © 2017 Lumenpulse Group Inc.
MG - R38

Specification Sheet

lumenbeam

Large

WHITE AND STATIC COLOURS

1-10V dimming (DIM)

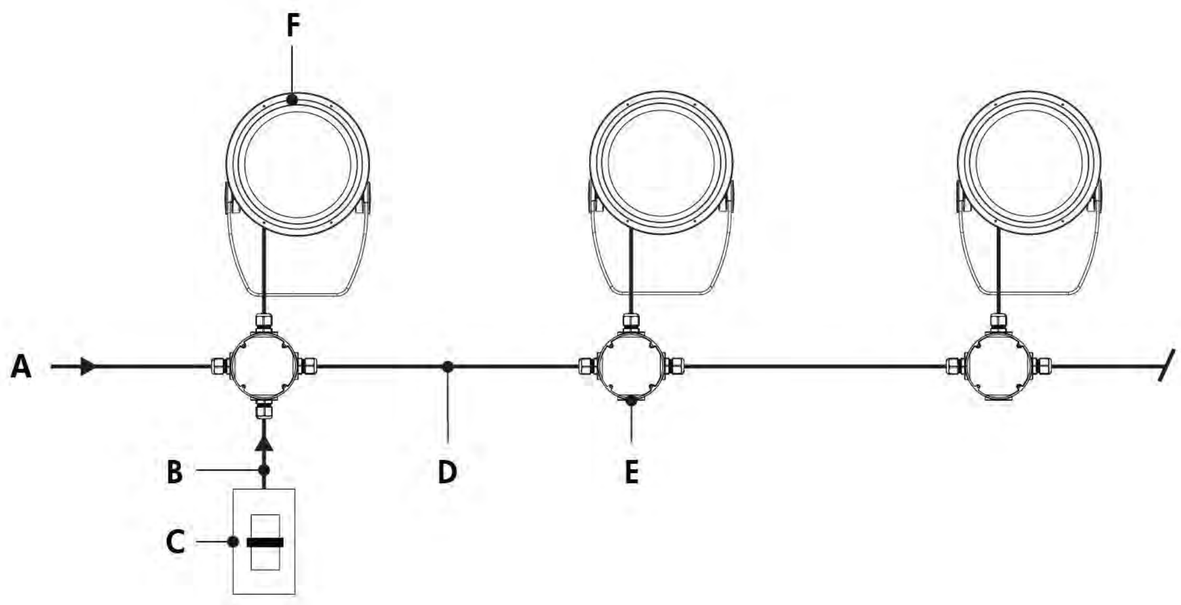

A - Power input (100-277V)
B - Data wiring (by others)
C - Third party dimmer
D - Power and data wiring (by others)
E - Junction box (by others)
F - Lumenbeam Large

1-10V dimming (DIM) - wiring detail - CE

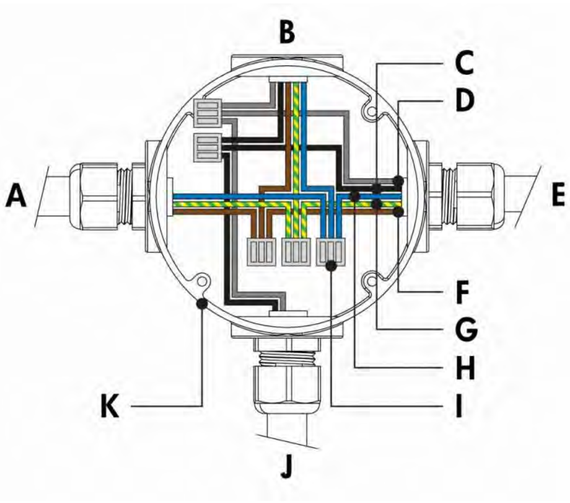

A - Power input or from previous fixture
B - To fixture
C - 1-10 V +
D - 1-10 V -
E - To next fixture
F - Live
G - Ground
H - Neutral
I - Terminal connector (by others)
J - From third party dimmer
K - Junction box (by others)

1-10V dimming (DIM) - wiring detail – CE Class II

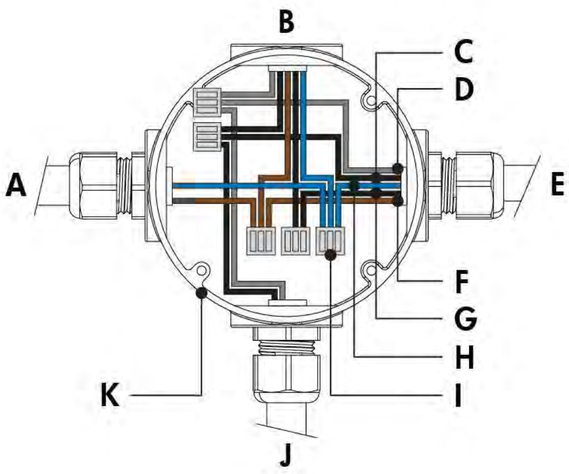

A - Power input or from previous fixture
B - To fixture
C - 1-10 V +
D - 1-10 V -
E - To next fixture
F - Live
G - Signal common
H - Neutral
I - Terminal connector (by others)
J - From third party dimmer
K - Junction box (by others)

- Consult factory for specific applications and maximum fixture count/cable length recommendations.
- 1-10V mA ratings: passive dimmer (Current Sink): 3mA per fixture, active dimmer (Current Source): 0.5mA per fixture.
- 10% minimum dimming value.
- 50 watts per fixture.

lumenpulse™ 11/13 Weston Street, Unit no 13.3.2 London, SE1 3ER GB **T** +44 (0) 2031 765370 info@lumenpulse.com **www.lumenpulsegroup.com**

Lumenpulse Group Inc. reserves the right to make changes to this product at any time without prior notice and such modification shall be effective immediately
2017.11.28 copyright © 2017 Lumenpulse Group Inc.
MG - R38

Specification Sheet

lumenbeam

Large

WHITE AND STATIC COLOURS

DALI dimming (DALI)

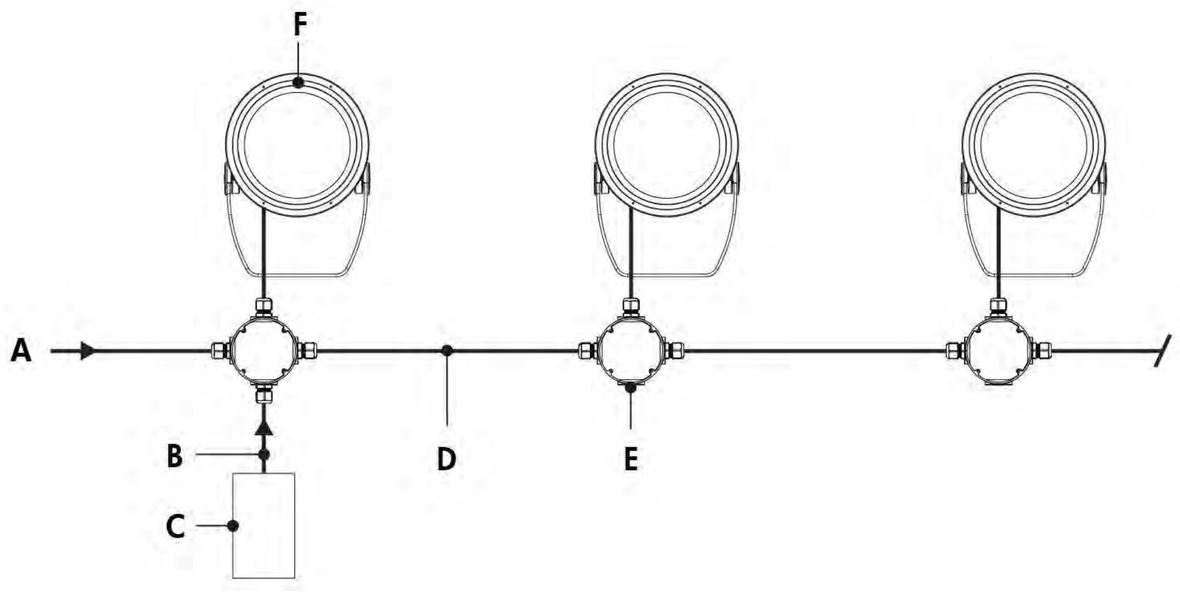

A - Power input (100-277V)
B - Data wiring (by others)
C - Third party DALI controller
D - Power and data wiring (by others)
E - Junction box (by others)
F - Lumenbeam Large

DALI dimming (DALI) - wiring detail - CE

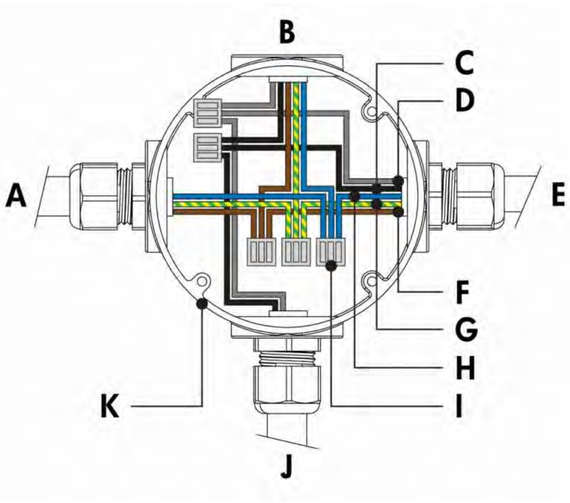

A - Power input or from previous fixture
B - To fixture
C - Data +
D - Data -
E - To next fixture
F - Live
G - Ground
H - Neutral
I - Terminal connector (by others)
J - From third party DALI controller
K - Junction box (by others)

DALI dimming (DALI) - wiring detail - CE Class II option

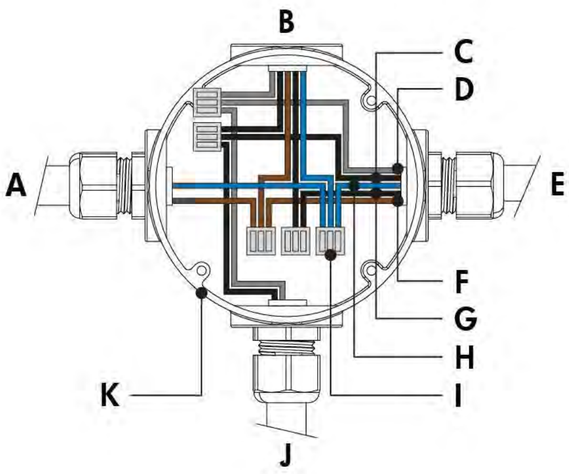

A - Power input or from previous fixture
B - To fixture
C - Data +
D - Data -
E - To next fixture
F - Live
G - Signal common
H - Neutral
I - Terminal connector (by others)
J - From third party DALI controller
K - Junction box (by others)

- Consult factory for specific applications and maximum fixture count/cable length recommendations.
- Maximum of 64 DALI fixtures per DALI loop.
- 1% minimum dimming value.
- 50 watts per fixture.

lumenpulse™

11/13 Weston Street, Unit no 13.3.2 London, SE1 3ER GB **T** +44 (0) 2031 765370 info@lumenpulse.com **www.lumenpulsegroup.com**

Lumenpulse Group Inc. reserves the right to make changes to this product at any time without prior notice and such modification shall be effective immediately
2017.11.28 copyright © 2017 Lumenpulse Group Inc.
MG - R38

Specification Sheet

lumenbeam

Large

WHITE AND STATIC COLOURS

Lutron® EcoSystem® Enabled dimming (ES)

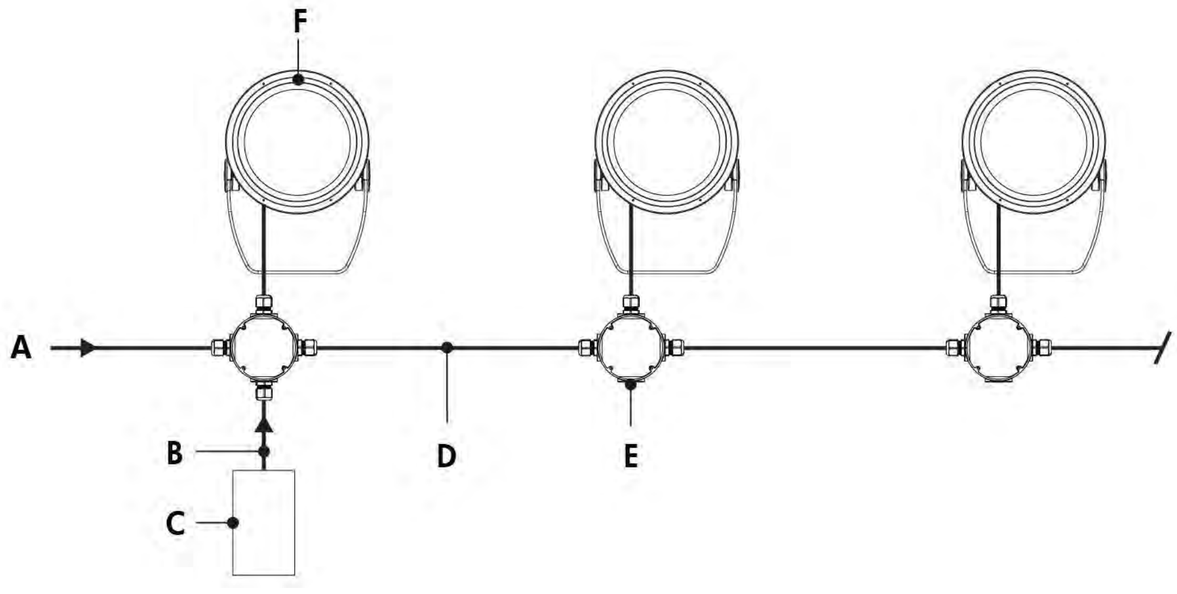

A - Power input (100-277V)
B - Data wiring (by others)
C - Lutron® EcoSystem® controller
D - Power and data wiring (by others)
E - Junction box (by others)
F - Lumenbeam Large

Lutron® EcoSystem® Enabled dimming (ES) - wiring detail

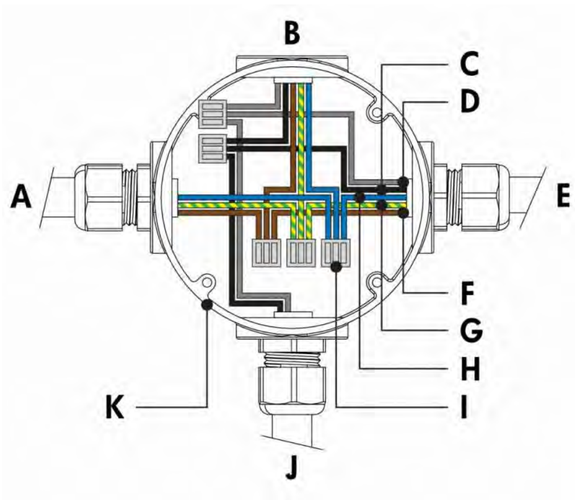

A - Power input or from previous fixture
B - To fixture
C - Data +
D - Data -
E - To next fixture
F - Live
G - Ground
H - Neutral
I - Terminal connector (by others)
J - From Lutron® EcoSystem® controller
K - Junction box (by others)

- Consult factory for specific applications and maximum fixture count/cable length recommendations.
- Each Lutron® EcoSystem® enabled fixture has its own address; for the example shown, there are a total of 3 EcoSystem® addresses.
- 1% minimum dimming value.
- 50 watts per fixture.

lumenpulse™ 11/13 Weston Street, Unit no 13.3.2 London, SE1 3ER GB **T** +44 (0) 2031 765370 info@lumenpulse.com **www.lumenpulsegroup.com**

Lumenpulse Group Inc. reserves the right to make changes to this product at any time without prior notice and such modification shall be effective immediately
2017.11.28 copyright © 2017 Lumenpulse Group Inc.
MG - R38

Specification Sheet

lumenbeam

Large

WHITE AND STATIC COLOURS

Star Layout (DMX/RDM)

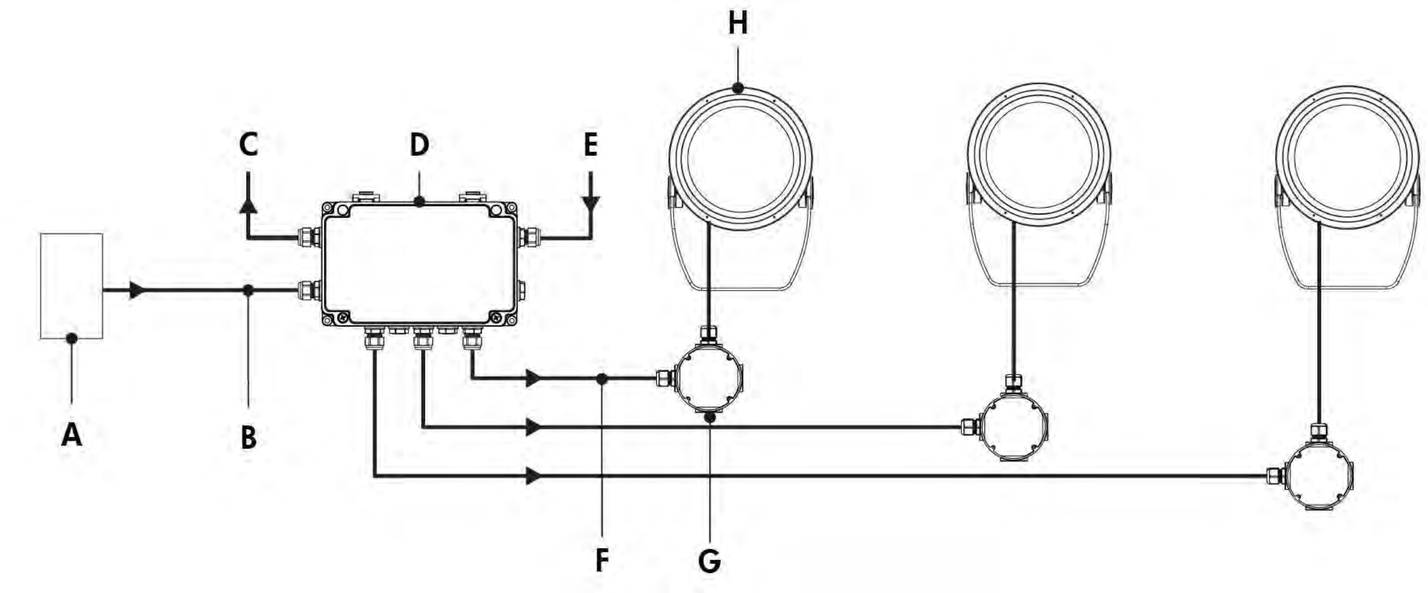

A - Third party DMX/RDM controller
B - Data input (Belden 9841 or equivalent, by others)
C - Data output to next CBX (optional, not isolated/not boosted)
D - CBX-ST
E - Power input (100-277V)
F - Power and data output to fixture (wiring by others)
G - Junction box (by others)
H - Lumenbeam Large

Star Layout (DMX/RDM) - wiring detail - CE

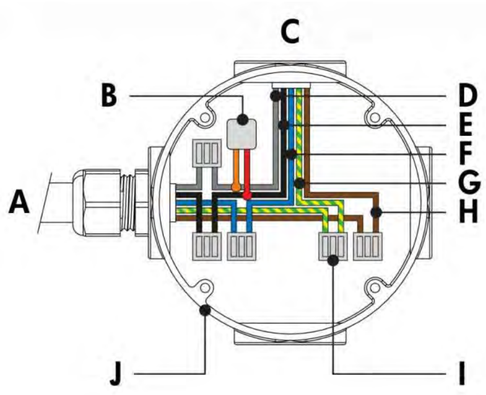

A - From CBX or previous fixture
B - Lumenterminator*
C - To fixture
D - Data -
E - Data +
F - Neutral
G - Ground
H - Live
I - Terminal connector (by others)
J - Junction box (by others)

Star Layout (DMX/RDM) - wiring detail - CE Class II option

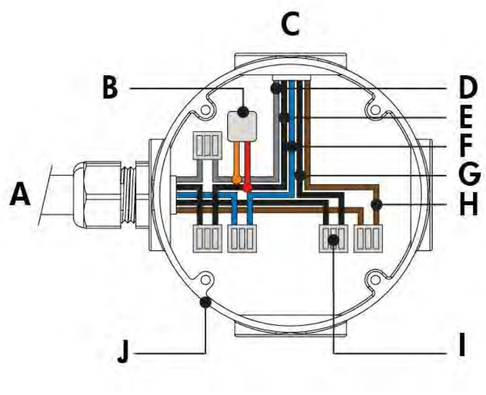

A - From CBX or previous fixture
B - Lumenterminator*
C - To fixture
D - Data -
E - Data +
F - Neutral
G - Signal common
H - Live
I - Terminal connector (by others)
J - Junction box (by others)

Maximum number of fixtures per run (Based on16A maximum, 1,5mm² cable, fixtures spaced 10ft on center, first fixture 50ft from CBX)				
Configuration/Voltage	**120V**	**208V**	**240V**	**277V**
LBL	18	28	32	32

- Consult factory for specific applications and maximum fixture count/cable length recommendations.
- Run length calculations are based on a voltage drop of no more than 25V.
- The DMX/RDM protocol states a maximum of 32 DMX/RDM enabled fixtures on any single run.
- Maximum of 4 DMX/RDM repeaters/CBX cascading in line.
- Maximum of 6 outputs per CBX-ST.
- Each fixture requires 1 DMX address.
- 1% minimum dimming value.
- 50 watts per fixture.

*DMX terminator is required at the end of each run to maintain data integrity. (6x) DMX lumenterminators included per CBX-ST. See installation instructions for details.

lumenpulse™ 11/13 Weston Street, Unit no 13.3.2 London, SE1 3ER GB **T** +44 (0) 2031 765370 info@lumenpulse.com **www.lumenpulsegroup.com**

Lumenpulse Group Inc. reserves the right to make changes to this product at any time without prior notice and such modification shall be effective immediately
2017.11.28 copyright © 2017 Lumenpulse Group Inc.
MG - R38

Specification Sheet

lumenbeam

Large

WHITE AND STATIC COLOURS

Daisy Chain Layout (DMX/RDM)

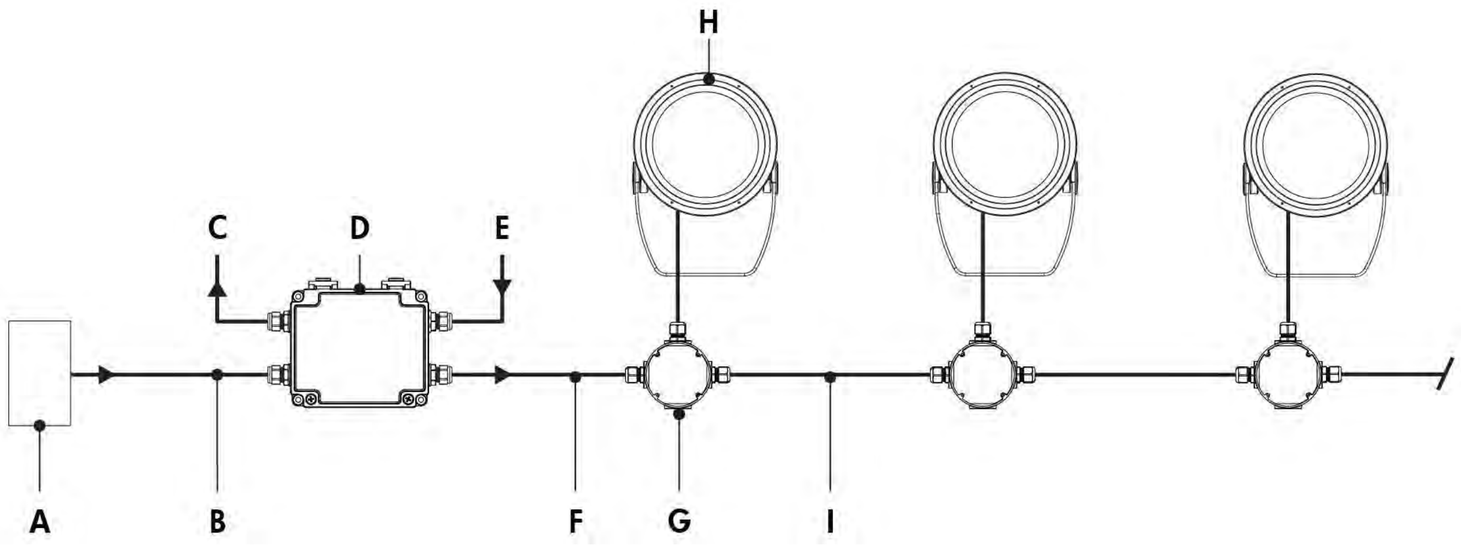

A - Third party DMX/RDM controller
B - Data input (Belden 9841 or equivalent, by others)
C - Data output to next CBX (optional, not isolated/not boosted)
D - CBX-DS
E - Power input (100-277V)
F - Power and data output to fixture (wiring by others)
G - Junction box (by others)
H - Lumenbeam Large
I - Power and data wiring (by others)

Daisy Chain Layout (DMX/RDM) - wiring detail (first or middle of run) - CE

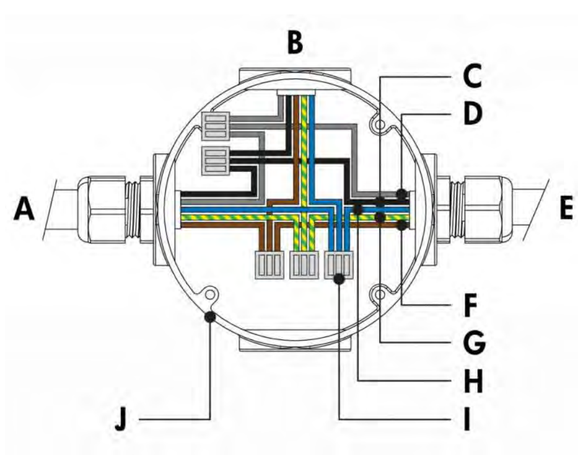

A - From CBX or previous fixture
B - To fixture
C - Data +
D - Data -
E - To next/from previous fixture
F - Live
G - Ground
H - Neutral
I - Terminal connector (by others)
J - Junction box (by others)

Daisy Chain Layout (DMX/RDM) - wiring detail (end of run) - CE

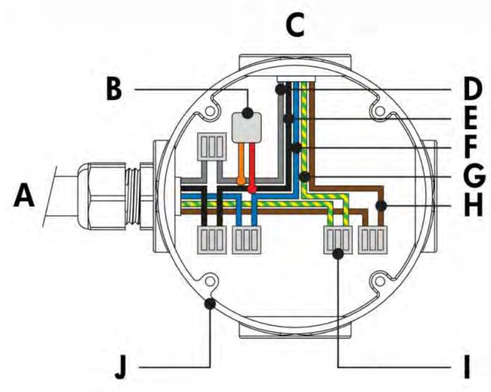

A - From CBX or previous fixture
B - Lumenterminator*
C - To fixture
D - Data -
E - Data +
F - Neutral
G - Ground
H - Live
I - Terminal connector (by others)
J - Junction box (by others)

Daisy Chain Layout (DMX/RDM) - wiring detail (first or middle of run) - CE Class II option

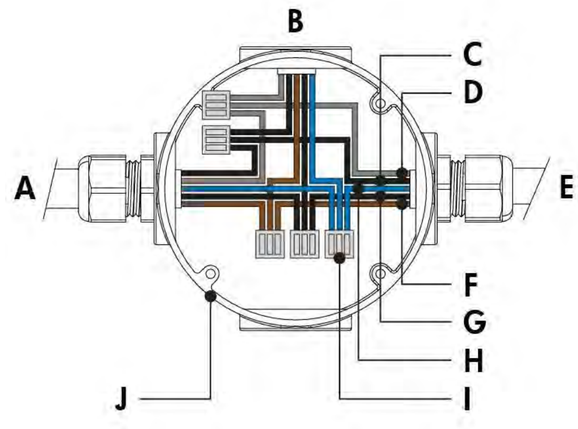

A - From CBX or previous fixture
B - To fixture
C - Data +
D - Data -
E - To next/from previous fixture
F - Live
G - Signal common
H - Neutral
I - Terminal connector (by others)
J - Junction box (by others)

Lumenpulse Group Inc. reserves the right to make changes to this product at any time without prior notice and such modification shall be effective immediately
2017.11.28 copyright © 2017 Lumenpulse Group Inc.
MG - R38

Specification Sheet

lumenbeam

Large

WHITE AND STATIC COLOURS

Daisy Chain Layout (DMX/RDM) - wiring detail (end of run) - CE Class II option

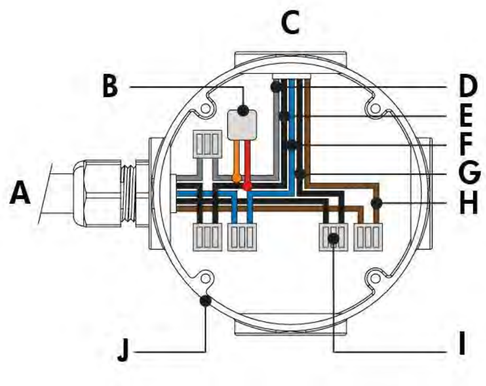

A - From CBX or previous fixture
B - Lumenterminator*
C - To fixture
D - Data -
E - Data +
F - Neutral
G - Signal common
H - Live
I - Terminal connector (by others)
J - Junction box (by others)

Maximum number of fixtures per run (Based on16A maximum, 1,5mm² cable, fixtures spaced 10ft on center, first fixture 50ft from CBX)				
Configuration/Voltage	**120V**	**208V**	**240V**	**277V**
LBL	18	28	32	32

- Consult factory for specific applications and maximum fixture count/cable length recommendations.
- Run length calculations are based on a voltage drop of no more than 25V.
- The DMX/RDM protocol states a maximum of 32 DMX/RDM enabled fixtures on any single run.
- Maximum of 4 DMX/RDM repeaters/CBX cascading in line.
- Maximum of 1 output per CBX-DS.
- Maximum of 3 ft cable length between fixture and next junction box for daisy chain layout.
- Each fixture requires 1 DMX address.
- 1% minimum dimming value.
- 50 watts per fixture.

* DMX terminator is required at the end of each run to maintain data integrity. (2x) DMX lumenterminators included per CBX-DS. See installation instructions for details.

Lumenpulse Group Inc. reserves the right to make changes to this product at any time without prior notice and such modification shall be effective immediately
2017.11.28 copyright © 2017 Lumenpulse Group Inc.
MG - R38

Specification Sheet

lumenbeam

Large

WHITE AND STATIC COLOURS

Accessories (order separately)

Control Boxes

CBX-DS-Power and control box - daisy chain configuration

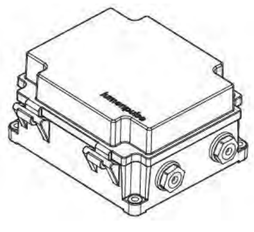

DMX/RDM control box. One power and data output to fixture or fixture run. Ethernet enabled option. Refer to CBX specification sheet for details.

CBX-ST-Power and control box - star configuration

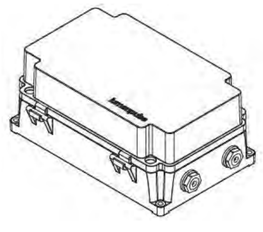

DMX/RDM control box. Up to six power and data outputs to fixtures or fixture runs. Ethernet enabled option. Refer to CBX specification sheet for details.

Control Systems

LTO2-Lumentouch 2.0™



Lumentouch is a wall mount DMX 512 controller keypad.

LCU-Lumencue



Lumencue is a USB / mini SD DMX 512 controller.

Diagnostic and Addressing Tools

LID-LumenID

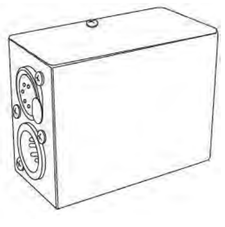

LumenID is a diagnostic and addressing DMX/RDM tool. It must be specified on all DMX applications. Refer to LID specification sheet for details.

LID-LT-LumentalkID

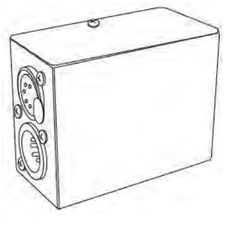

LumentalkID is a diagnostic and addressing tool. It must be specified for all Lumentalk (LT) applications. Refer to LID-LT specification sheet for details.

lumenpulse™ 11/13 Weston Street, Unit no 13.3.2 London, SE1 3ER GB **T** +44 (0) 2031 765370 info@lumenpulse.com **www.lumenpulsegroup.com**

Lumenpulse Group Inc. reserves the right to make changes to this product at any time without prior notice and such modification shall be effective immediately
2017.11.28 copyright © 2017 Lumenpulse Group Inc.
MG - R38

Specification Sheet

lumenbeam

Large

WHITE AND STATIC COLOURS

How to order

1	2	3	4	5	6	7	8
LBL							

9	10

1 . Housing

LBL	Lumenbeam™ Large

2 . Voltage

100	100 volts
120	120 volts
208	208 volts
220	220 volts
240	240 volts
277	277 volts

3 . Colour and Colour Temperature [1]

22K	2200K
27K	2700K
30K	3000K
35K	3500K
40K	4000K
57K	5700K
RD	Red
GR	Green
BL	Blue

4 . Optics

VN	Very Narrow 6°
NS	Narrow Spot 10°
NF	Narrow Flood 20°
FL	Flood 40°
WFL	Wide Flood 60°

5 . Optical Option

LSLH	Linear spread lens horizontal distribution [2]
LSLV	Linear spread lens vertical distribution [2]

6 . Finish

BK	Black Sandtex®
BRZ	Bronze Sandtex®
SI	Silver Sandtex®
WH	Smooth white
BKTX	Textured black
BRZTX	Textured bronze non-metallic
GRATX	Textured medium grey
GRNTX	Textured green
WHTX	Textured white
CC	Custom colour and finish (please specify RAL colour) [3]

7 . Control

NO	On/Off control
LT	Lumentalk [4] [5]
DIM	1-10V dimming
DALI	DALI dimming
ES	Lutron® EcoSystem® Enabled dimming [5]
DMX/RDM	DMX/RDM enabled

8 . Options

SY	Short Yoke
3GV	3G ANSI C136.31 Vibration Rating for bridge applications
CRC	Corrosion-resistant coating for hostile environments [6]

lumenpulse™

11/13 Weston Street, Unit no 13.3.2 London, SE1 3ER GB **T** +44 (0) 2031 765370 info@lumenpulse.com **www.lumenpulsegroup.com**

Lumenpulse Group Inc. reserves the right to make changes to this product at any time without prior notice and such modification shall be effective immediately
2017.11.28 copyright © 2017 Lumenpulse Group Inc.
MG - R38

Specification Sheet

lumenbeam

Large

WHITE AND STATIC COLOURS

9 . Certification

UL	UL compliant
CE	CE compliant
CEII	CE compliant Class II double insulated

10 . Cable Length [7]

1M	3.3 ft [7] [8]
5M	16.4 ft
10M	32.8 ft
15M	49.2 ft
20M	65.6 ft
30M	98.4 ft

Notes:

[1] Consult factory for availability of static Royal Blue, 6500K and 90+ CRI.

[2] Factory installed, not available for 60° optic. Field adjustable spread lens optical accessory available, order separately.

[3] Lumenpulse offers a wide selection of RAL CLASSIC (K7) colours with a smooth texture and high-gloss finish. Please consult factory for a list of available K7 colours, other RAL textures and glosses, or to match alternate colour charts. Final colour matching results may vary.

[4] A Lumentranslator and LumentalkID (LIDLT) must be specified for Lumentalk applications. Consult Lumentranslator and Lumentalk pages and specification sheets for details.

[5] Not available with Class II double insulated option.

[6] Use only when exposed to salt spray and harsh chemicals. This option is not required for normal outdoor exposure.

[7] 1 m cable length is standard unless otherwise specified.

[8] Maximum of 3.3 ft cable length for daisy chain DMX applications with CBX-DS.

lumenpulse™ 11/13 Weston Street, Unit no 13.3.2 London, SE1 3ER GB **T** +44 (0) 2031 765370 info@lumenpulse.com **www.lumenpulsegroup.com**

Lumenpulse Group Inc. reserves the right to make changes to this product at any time without prior notice and such modification shall be effective immediately
2017.11.28 copyright © 2017 Lumenpulse Group Inc.
MG - R38

Specification Sheet

lumenbeam

Medium

WHITE AND STATIC COLORS

Project Name _____ **Qty** _____

Type _____ **Catalog / Part Number** _____



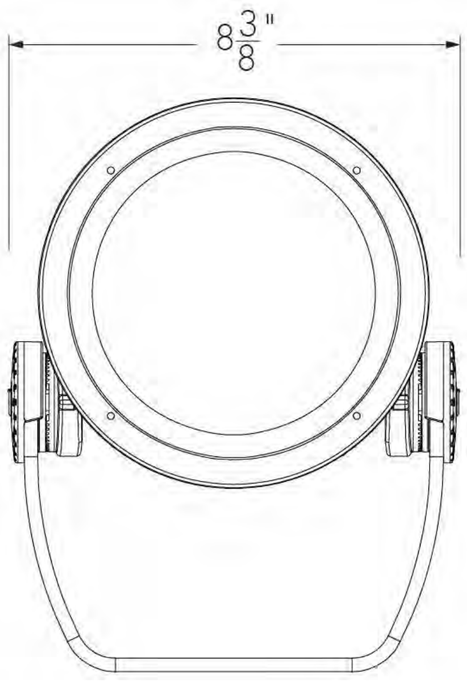

Front view

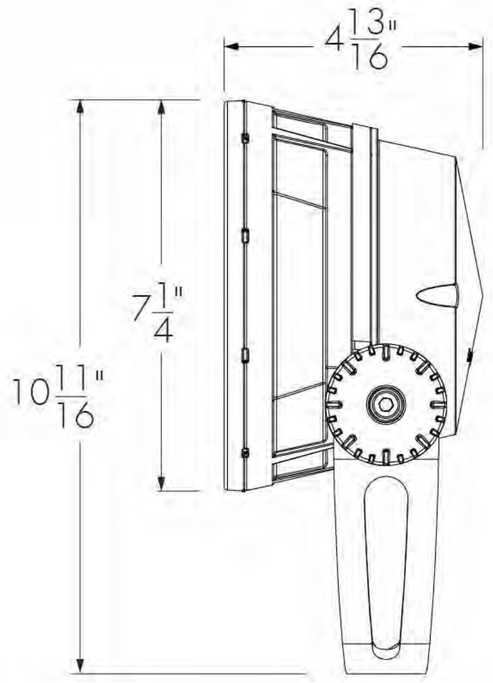

Side view

Photometric Summary

4000K	Delivered output (lm)	Intensity (peak cd)
VN	1,754	75,278
NS	1,552	56,914
NF	1,484	10,878
FL	1,428	4,003
WFL	1,370	1,312

Photometric performance is measured in compliance with IESNA LM-79-08.

Optics

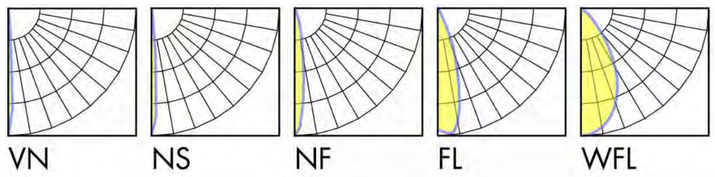

Control

ON/OFF 0-10V DALI DMXrdm

Rating

c UL us CE RoHS

Description

The Lumenbeam Medium is a high-performance, 28W luminaire for solving numerous interior and exterior challenges such as facades, columns, trees or other architectural and landscape features. It offers a flexible package of options: a choice of optics for flood or accent lighting; a number of color temperatures and colors; various mounting options, accessories, spread lenses and controls.

Features

Color and Color Temperature	2200K, 2700K, 3000K, 3500K, 4000K, 5700K, Red, Green, Blue
Optics (nominal distribution)	6°, 10°, 20°, 40°, 60°
Optical Option	Linear spread lens horizontal distribution, Linear spread lens vertical distribution
Options	Short Yoke, 3G ANSI C136.31 Vibration Rating for bridge applications, Corrosion-resistant coating for hostile environments
Power Consumption	28 W
Warranty	5-year limited warranty

Performance

Delivered Output	1,754 lm (4000K, VN optic)
Delivered Intensity	75,278 cd at nadir (4000K, VN optic)
Illuminance at Distance	Minimum 1 fc at 274 ft distance (4000K, VN optic)
Color Consistency	2 SDCM
Color Rendering	CRI 80+
Lumen Maintenance	L70 120,000 hrs (Ta 25 °C)

lumenpulse™

1220 Marie-Victorin Blvd., Longueuil, QC J4G 2H9 CA **T** 1.877.937.3003 | 514.937.3003 **F** 514.937.6289
info@lumenpulse.com **www.lumenpulsegroup.com**

Lumenpulse Group Inc. reserves the right to make changes to this product at any time without prior notice and such modification shall be effective immediately
2017.11.28 copyright © 2017 Lumenpulse Group Inc.
MG - R30

Specification Sheet

lumenbeam

Medium

WHITE AND STATIC COLORS

Physical

Housing Material	Low copper content high pressure die-cast aluminum
Yoke Material	Heavy aluminum (standard yoke included)
Lens Material	Clear tempered glass
Hardware Material	Stainless steel
Gasket Material	Silicone
Surface Finish	Electrostatically applied polyester powder coat
Weight	6.7 lbs
EPA	Front = 0.46 sq ft, Side = 0.37 sq ft

Electrical and control

Voltage	100 to 277 volts
Fixture Cable	Power and data in 1 cable, 3 ft cord standard (#16-5), other lengths available
Resolution (DMX/RDM)	Per fixture, 8-bit or 16-bit
Control	On/Off control, Dim to Warm via 0-10V (DWW only), DALI dimming, DMX/RDM enabled, Lumentalk system is enabled with LDB accessory - see typical wiring diagrams for details

Environmental

Operating Temperature	-13 °F to 122 °F
IP Rating	IP66
IK Rating	IK09

Accessories (order separately)

Control Boxes	Power and control box - daisy chain configuration, Power and control box - star configuration, Lumentalk Data Bridge
Control Systems	Lumentouch 2.0™, Lumencue, Lumentone
Diagnostic and Addressing Tools	LumenID, LumentalkID

lumenpulse™

1220 Marie-Victorin Blvd., Longueuil, QC J4G 2H9 CA **T** 1.877.937.3003 | 514.937.3003 **F** 514.937.6289
info@lumenpulse.com **www.lumenpulsegroup.com**

Lumenpulse Group Inc. reserves the right to make changes to this product at any time without prior notice and such modification shall be effective immediately
2017.11.28 copyright © 2017 Lumenpulse Group Inc.
MG - R30

Specification Sheet

lumenbeam

Medium

WHITE AND STATIC COLORS

Mounting options

SY - Short yoke

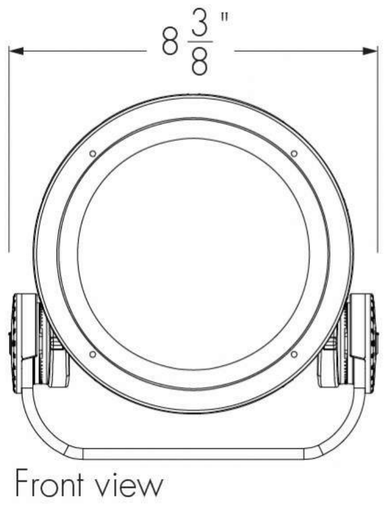

Front view

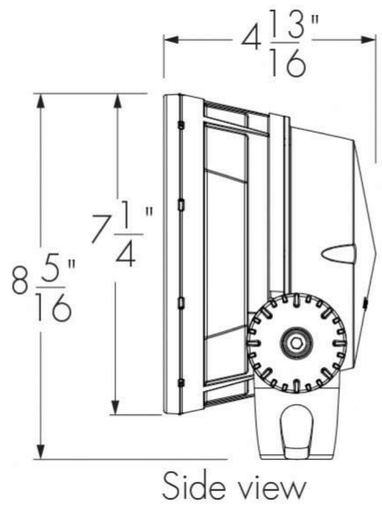

Side view

Mounting details

Mounting hole pattern - standard and short yoke

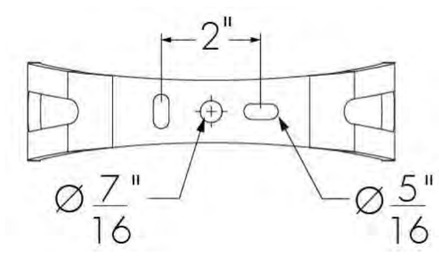

Adjustable pivot limits

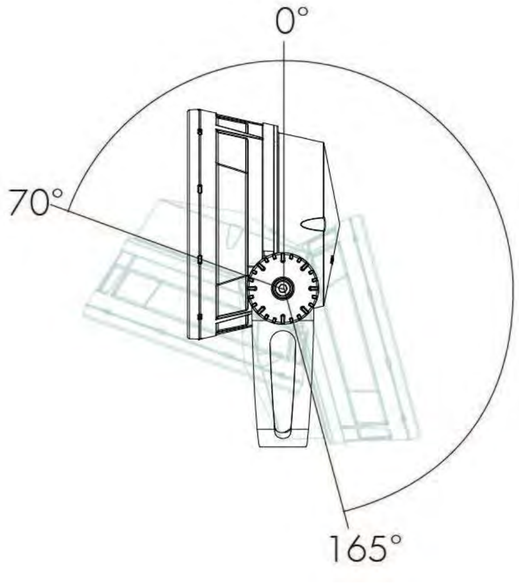

Standard yoke

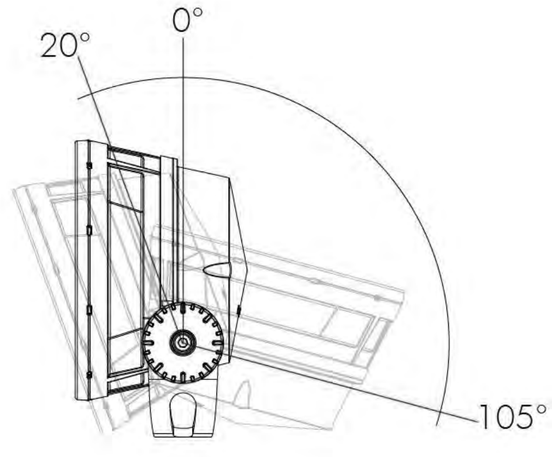

Short yoke

Optical options

LSLH - Linear spread lens horizontal distribution
LSLV - Linear spread lens vertical distribution



LSLH



LSLV

	Beam angle with LSLH/LSLV
VN	8° x 60°
NS	9° x 60°
NF	18° x 65°
FL	32° x 72°

Factory installed, not adjustable on site. Not available for WFL optic.
See 'Optical Accessories' section for field adjustable spread lens (LSLA).

lumenpulse™

1220 Marie-Victorin Blvd., Longueuil, QC J4G 2H9 CA **T** 1.877.937.3003 | 514.937.3003 **F** 514.937.6289
info@lumenpulse.com **www.lumenpulsegroup.com**

Lumenpulse Group Inc. reserves the right to make changes to this product at any time without prior notice and such modification shall be effective immediately
2017.11.28 copyright © 2017 Lumenpulse Group Inc.
MG - R30

Specification Sheet

lumenbeam

Medium

WHITE AND STATIC COLORS

Mounting accessories (order separately)

Round pole mounting accessory

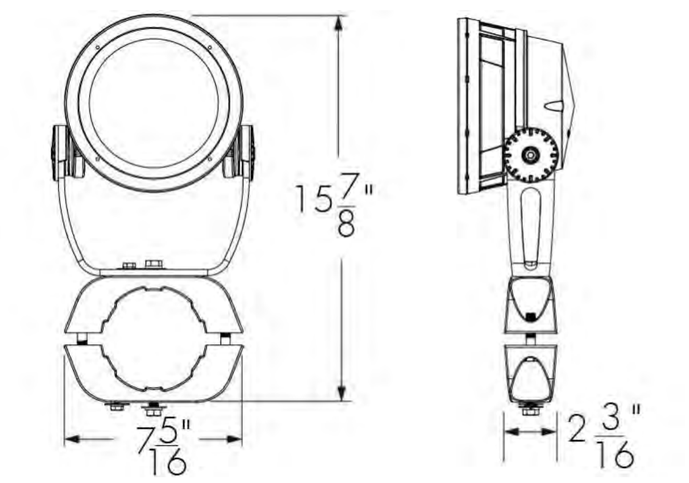

PM4 model shown.
Consult factory for square pole section.

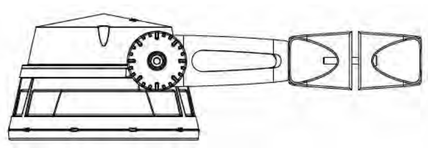

PM4-1, PM4.5-1, PM5-1 - Round pole mounting accessory - single fixture

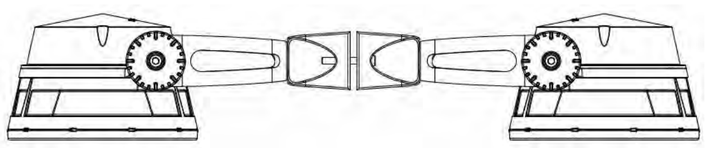

PM4-2, PM4.5-2, PM5-2 - Round pole mounting accessory - twin fixures
*One bracket assembly is supplied per 2 fixtures unless otherwise specified.

	PM4	PM4.5	PM5
For pole Ø	4" ± 1/16"	4.5" ± 1/16"	5" ± 1/16"

Consult factory for other pole diameters.

Tenon adapter

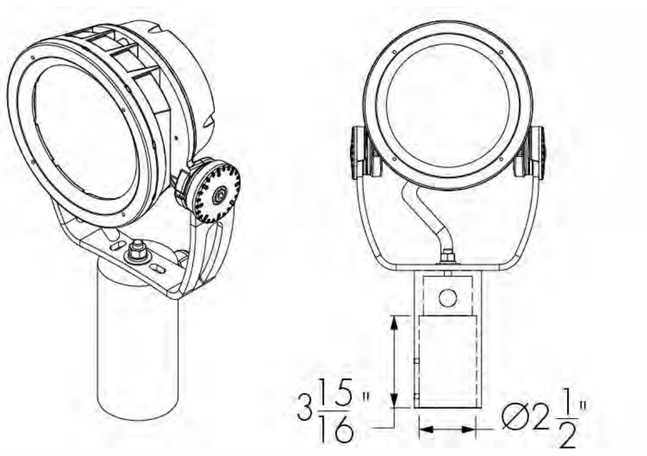

TN2 - Tenon adapter to fit on 2 3/8 in O.D. tenon

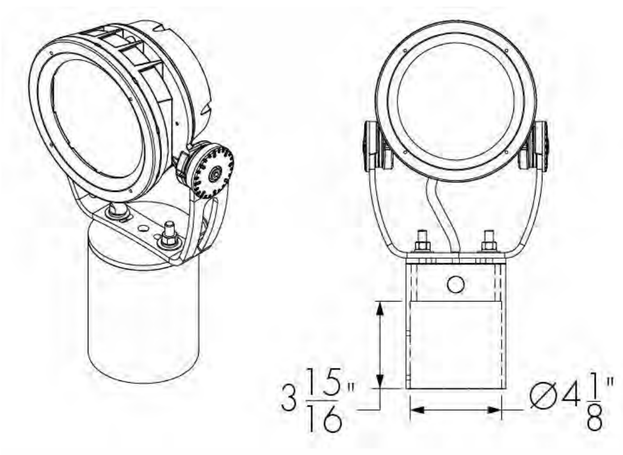

TN4 - Tenon adpater to fit on 4 in O.D. tenon

SK - Stake mounting

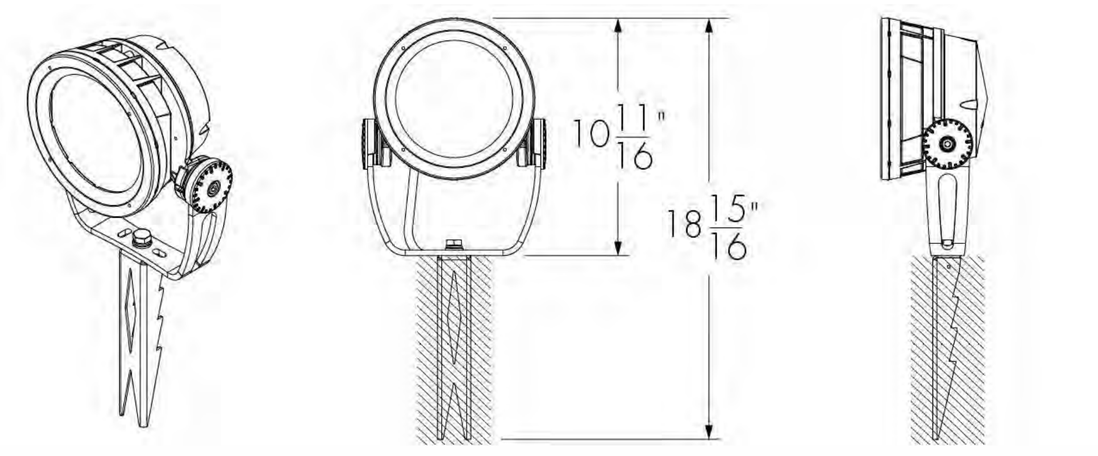

lumenpulse™
1220 Marie-Victorin Blvd., Longueuil, QC J4G 2H9 CA **T** 1.877.937.3003 | 514.937.3003 **F** 514.937.6289
info@lumenpulse.com **www.lumenpulsegroup.com**

Lumenpulse Group Inc. reserves the right to make changes to this product at any time without prior notice and such modification shall be effective immediately
2017.11.28 copyright © 2017 Lumenpulse Group Inc.
MG - R30

Specification Sheet

lumenbeam

Medium

WHITE AND STATIC COLORS

Optical accessories (order separately)

Installed optical accessories will affect the maximum pivot limits for each mounting option, consult factory for details.

SN - Snoot

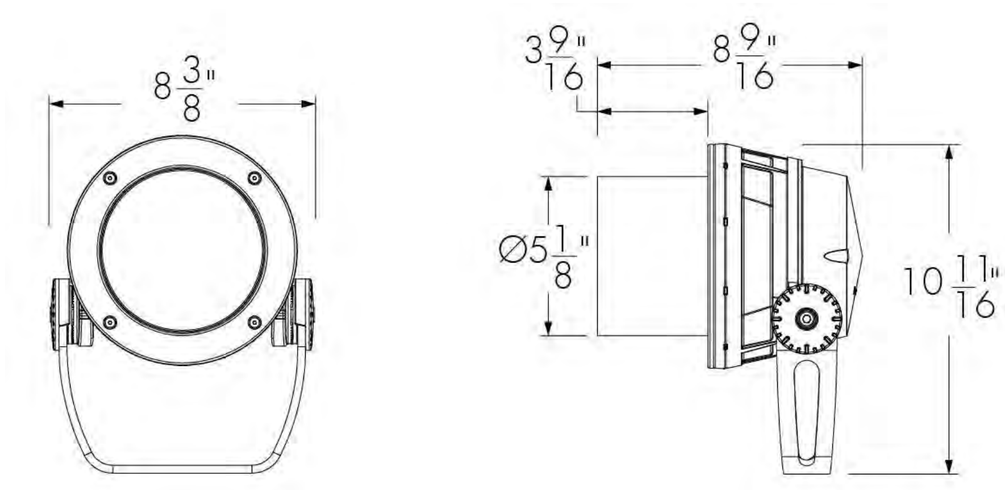

LBMSN-FINISH-BK
Interior surface painted black. Please specify desired exterior FINISH from list of available finishes.

SNW - Snoot wide

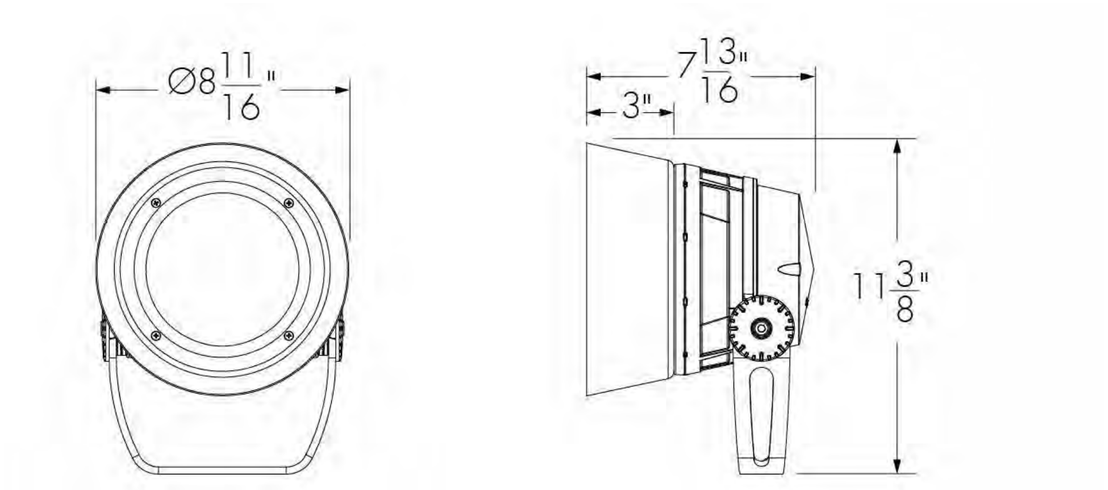

LBMSNW-FINISH-BK
Interior surface painted black. Please specify desired exterior FINISH from list of available finishes.

VS - Visor

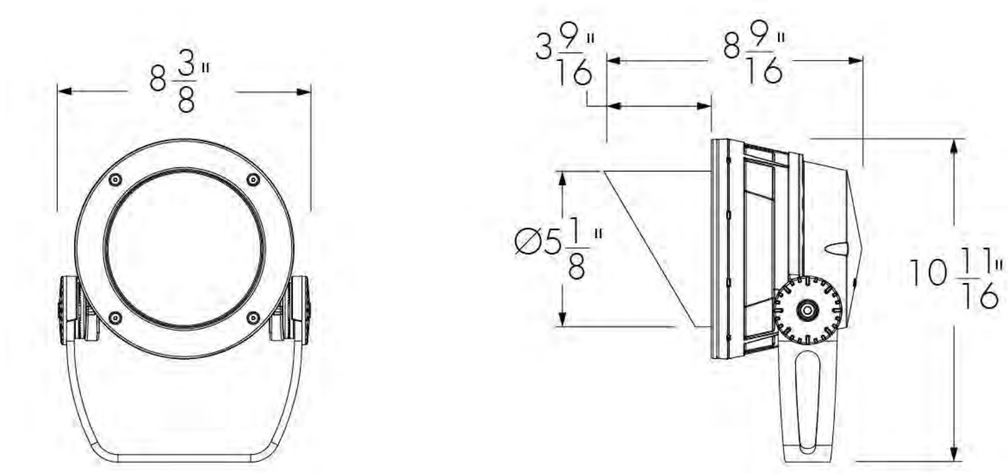

LBMVS-FINISH-BK
Interior surface painted black. Please specify desired exterior FINISH from list of available finishes.

LSLA - Linear spread lens adjustable

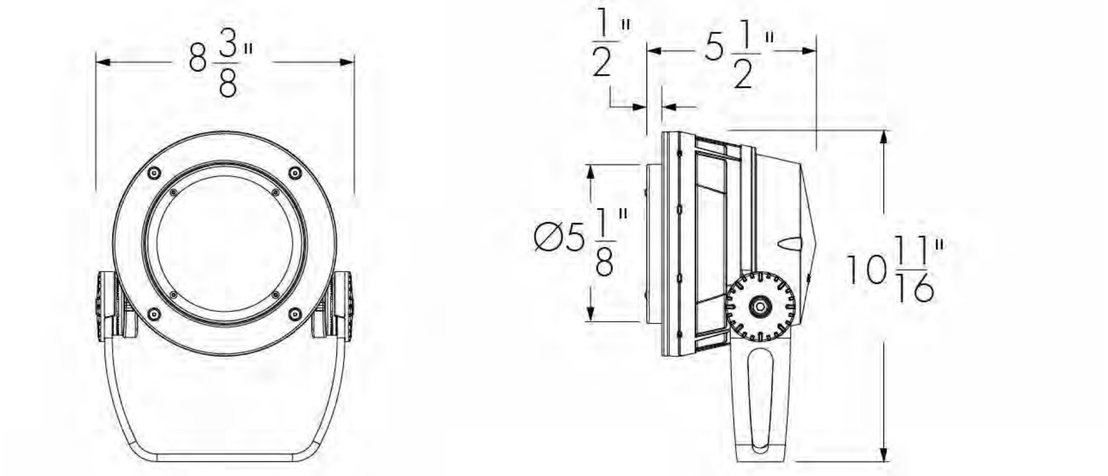

LBMLSLA-FINISH
Please specify desired exterior FINISH from list of available finishes.

WG - Wire guard

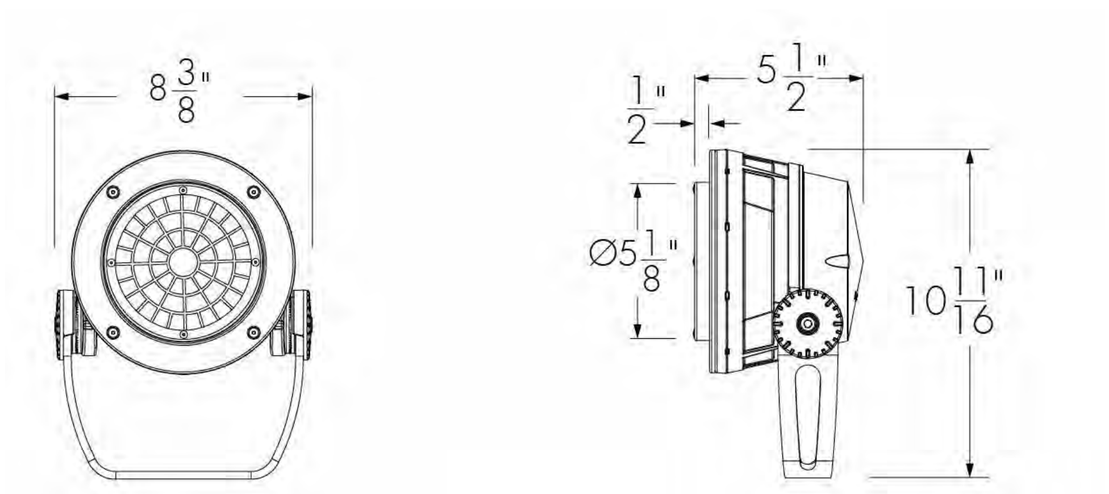

LBMWG-FINISH
Please specify desired exterior FINISH from list of available finishes.

Accessory combinations

+	Snoot	Snoot wide	Visor
Linear spread lens adjustable	YES	NO*	YES
Wire guard	YES	NO	YES

Accessory combinations must be ordered together on a single line.
Ex: A snoot + wire guard combination order code is LBMSNWG-BK-BK.
*Consult factory for a linear spread lens adjustable + snoot wide combination.

lumenpulse™
1220 Marie-Victorin Blvd., Longueuil, QC J4G 2H9 CA **T** 1.877.937.3003 | 514.937.3003 **F** 514.937.6289
info@lumenpulse.com **www.lumenpulsegroup.com**

Lumenpulse Group Inc. reserves the right to make changes to this product at any time without prior notice and such modification shall be effective immediately
2017.11.28 copyright © 2017 Lumenpulse Group Inc.
MG - R30

Specification Sheet

lumenbeam

Medium

WHITE AND STATIC COLORS

Available exterior finishes for optical accessories

BK - Black Sandtex®
BRZ - Bronze Sandtex®
SI - Silver Sandtex®
WH - Smooth white
BKTX - Textured black
BRZTX - Textured bronze, non-metallic
GRATX - Textured medium gray
GRNTX - Textured green
WHTX - Textured white
CC - Custom color and finish (please specify RAL color)*

*Lumenpulse offers a wide selection of RAL CLASSIC (K7) colors with a smooth texture and high-gloss finish. Please consult factory for a list of available K7 colors, other RAL textures and glosses, or to match alternate color charts. Final color matching results may vary.

lumenpulse™

1220 Marie-Victorin Blvd., Longueuil, QC J4G 2H9 CA **T** 1.877.937.3003 | 514.937.3003 **F** 514.937.6289
info@lumenpulse.com **www.lumenpulsegroup.com**

Lumenpulse Group Inc. reserves the right to make changes to this product at any time without prior notice and such modification shall be effective immediately
2017.11.28 copyright © 2017 Lumenpulse Group Inc.
MG - R30

Specification Sheet

lumenbeam

Medium

WHITE AND STATIC COLORS

How to order

1	2	3	4	5	6	7	8
LBM							

9	10

1 . Housing

LBM	Lumenbeam™ Medium

2 . Voltage

100	100 volts
120	120 volts
208	208 volts
220	220 volts
240	240 volts
277	277 volts

3 . Color and Color Temperature (1)

22K	2200K
27K	2700K
30K	3000K
35K	3500K
40K	4000K
57K	5700K
RD	Red
GR	Green
BL	Blue

4 . Optics

VN	Very Narrow 6°
NS	Narrow Spot 10°
NF	Narrow Flood 20°
FL	Flood 40°
WFL	Wide Flood 60°

5 . Optical Option

LSLH	Linear spread lens horizontal distribution (2)
LSLV	Linear spread lens vertical distribution (2)

6 . Finish

BK	Black Sandtex®
BRZ	Bronze Sandtex®
SI	Silver Sandtex®
WH	Smooth white
BKTX	Textured black
BRZTX	Textured bronze non-metallic
GRATX	Textured medium gray
GRNTX	Textured green
WHTX	Textured white
CC	Custom color and finish (please specify RAL color) (3)

7 . Control (4) (5)

NO	On/Off control
DIM	0-10V dimming
DALI	DALI dimming
DMX/RDM	DMX/RDM enabled

8 . Options

SY	Short Yoke
3GV	3G ANSI C136.31 Vibration Rating for bridge applications
CRC	Corrosion-resistant coating for hostile environments (6)

lumenpulse™

1220 Marie-Victorin Blvd., Longueuil, QC J4G 2H9 CA **T** 1.877.937.3003 | 514.937.3003 **F** 514.937.6289
info@lumenpulse.com **www.lumenpulsegroup.com**

Lumenpulse Group Inc. reserves the right to make changes to this product at any time without prior notice and such modification shall be effective immediately
2017.11.28 copyright © 2017 Lumenpulse Group Inc.
MG - R30

Specification Sheet

lumenbeam

Medium

WHITE AND STATIC COLORS

9 . Certification

UL	UL compliant
CE	CE compliant

10 . Cable Length [7]

3FT	3 ft [7] [8]
10FT	10 ft
20FT	20 ft
30FT	30 ft
50FT	50 ft
70FT	70 ft
100FT	100 ft

Notes:

[1] Consult factory for availability of static Royal Blue, 6500K and 90+ CRI.

[2] Factory installed, not available for 60° optic. Field adjustable spread lens optical accessory available, order separately.

[3] Lumenpulse offers a wide selection of RAL CLASSIC (K7) colors with a smooth texture and high-gloss finish. Please consult factory for a list of available K7 colors, other RAL textures and glosses, or to match alternate color charts. Final color matching results may vary.

[4] Lumentalk system is enabled with LDB accessory, DIM or DMX/RDM must be specified in the order code. See the typical wiring diagrams in the specification sheet for details.

[5] A Lumentranslator and LumentalkID (LIDLT) must be specified for Lumentalk applications. Consult Lumentranslator and Lumentalk pages and specification sheets for details.

[6] Use only when exposed to salt spray and harsh chemicals. This option is not required for normal outdoor exposure.

[7] 3 ft cable length is standard unless otherwise specified.

[8] Maximum of 3 ft cable length for daisy chain DMX applications with CBX-DS.

lumenpulse™

1220 Marie-Victorin Blvd., Longueuil, QC J4G 2H9 CA **T** 1.877.937.3003 | 514.937.3003 **F** 514.937.6289
info@lumenpulse.com **www.lumenpulsegroup.com**

Lumenpulse Group Inc. reserves the right to make changes to this product at any time without prior notice and such modification shall be effective immediately
2017.11.28 copyright © 2017 Lumenpulse Group Inc.
MG - R30

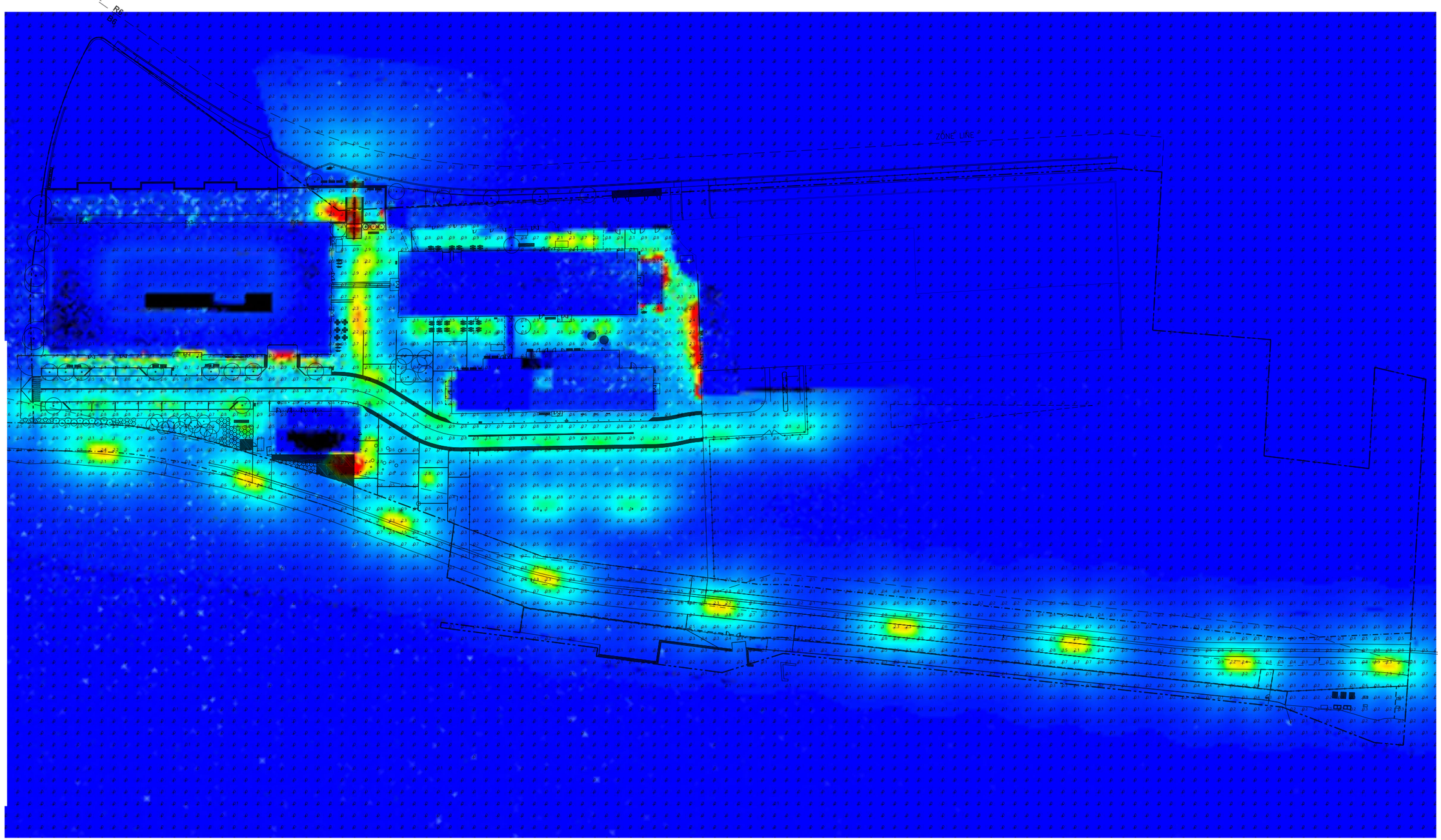

illuminance (FC)

0.0 0.5 1.0 1.5 2.0 2.5 3.0

Lam Partners
ARCHITECTURAL LIGHTING DESIGN

18145 Portland Foreside Illuminance Calculations
Level 3 Site Application (Overall Site)
November 8, 2019

illuminance (FC)

0.0 0.5 1.0 1.5 2.0 2.5 3.0

Lam Partners
ARCHITECTURAL LIGHTING DESIGN

18145 Portland Foreside Illuminance Calculations
Level 3 Site Application (Blocks 1/2/3/4)
November 8, 2019

illuminance (FC)

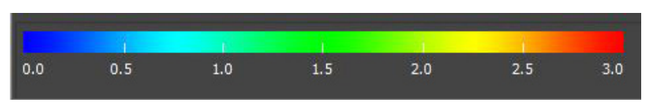

Lam Partners
ARCHITECTURAL LIGHTING DESIGN

18145 Portland Foreside Illuminance Calculations
Level 3 Site Application (Blocks 1/2/3/4)
November 8, 2019

Lam Partners
ARCHITECTURAL LIGHTING DESIGN

18145 Portland Foreside Illuminance Calculations
Level 3 Site Application (Site details)
November 8, 2019

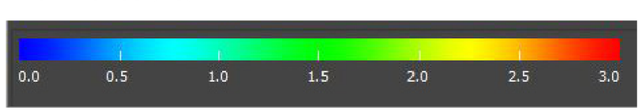

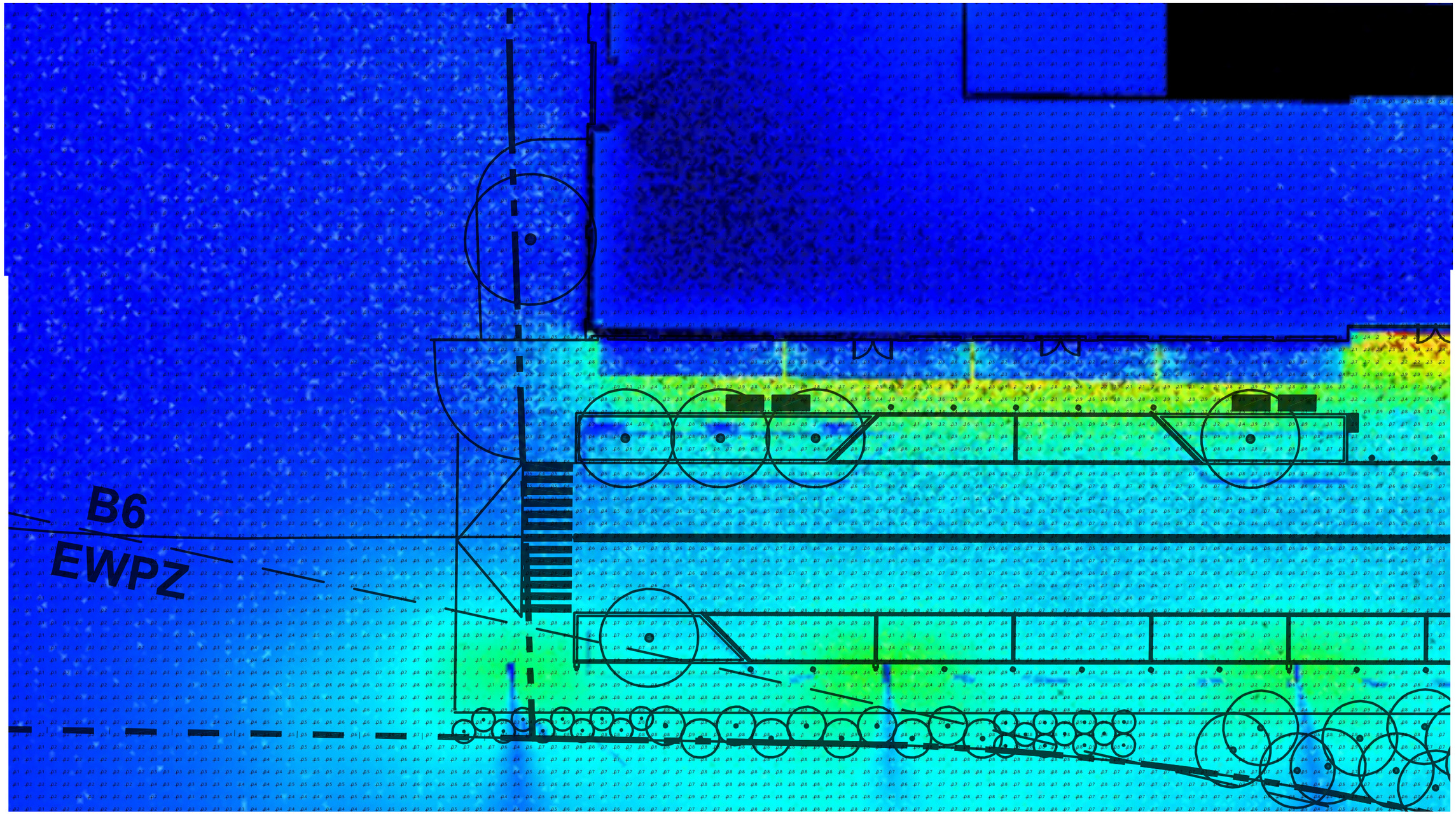

illuminance (FC)

0.0 0.5 1.0 1.5 2.0 2.5 3.0

Lam Partners
ARCHITECTURAL LIGHTING DESIGN

18145 Portland Foreside Illuminance Calculations
Level 3 Site Application (Site details)
November 8, 2019

10. ZONING ASSESSMENT

Phase 1 of the 58 Fore Street Master Development Plan is located within the City of Portland B-6 Eastern Waterfront Mixed Zone (B6), Eastern Waterfront Port Zone (EWPZ) and the Shoreland Overlay Zone. The B-6, EWPZ and Shoreland Overlay zones are regulated by Divisions 15.1, 17.5 and 26 of the City of Portland Land Use Ordinance.

Development Block	Zone*
Block 1	B6
Block 2	B6
Block 4	B6
Infrastructure, Utilities & Access Improvements	B6, EWPZ

*Portions of the site are located within the Shoreland Overlay Zone.

Uses associated with each of the Development Blocks such as office, restaurant, parking, retail, and residential are permitted within the zone or zones where they have been included. Structured parking is a permitted conditional use, given that first floor retail space is provided on the street frontages. The proposed structured parking on Block 1 and Block 4 includes a first-floor retail wrap along the frontage of the new roadway, as required in the B-6 zone.

The attached Zoning Assessment Table shows the project complies with dimensional requirements specified in the City's Land Use Ordinance.

10.1 Attachments

- City of Portland Zoning Assessment Table

ZONING ANALYSIS Relevant Zone(s) B-6 & Shoreland Overlay

All Projects:

	Required	Proposed
Lot Size	None	Varies
Area Per Dwelling Unit	None	Varies
Minimum Street Frontage	None	Varies
Front Yard Minimum	None	0
Front Yard Maximum	None	0
Rear Yard	None	0
Yard Right	None	0
Yard Left	None	0
Side Street Setback	N/A	N/A
Step Back	N/A	N/A
Maximum Lot Coverage	100%	100%
Minimum Lot Coverage	N/A	N/A
Maximum Height	See B6 Map	Per B6 Map
Open Space	N/A	N/A
Maximum Impervious Area	N/A	N/A
Pavement Setback	N/A	N/A
Floor Area Ratio	N/A	N/A
Off Street Parking Spaces	TBD**	
Loading Bays	N/A	N/A
Other 1 View Corridors	See B6 Map	Per B6 Map
Other 2		
Other 3		

**Note: Per Section 14-332.2(c) of the City's Ordinance, the Planning Board shall establish the parking requirements based upon parking analysis submitted by the Applicant.

N/A

Planned Residential Unit Developments (PRUD) Requirements

	Required	Proposed
Minimum Lot Size		
Minimum Lot Area per Dwelling		
Maximum # Units per Building		
Maximum Building Length		
Maximum Accessory Building Length		
Minimum Setbacks		
Minimum Building Separation		
Minimum Open Space		

N/A

Affordable Housing Density Bonuses (if applicable)

	Bonus Increase or Decrease	Maximum Allowable With Bonus	Proposed
Density			
Height			
Setback Reduction			
Recreation Space			
Maximum Accessory Building Length			
Minimum Setbacks			
Minimum Building Separation			
Minimum Open Space			
Explanatory Text 1 (optional):			
Explanatory Text 2 (optional):			
Explanatory Text 3 (optional):			

11. CONSISTENCY WITH CITY COMPREHENSIVE PLAN

The City of Portland's broad planning efforts have provided a solid foundation for the Phase 1 of the 58 Fore Street Master Development Plan. During the Master Development Plan process for the entire site in 2016, the project demonstrated consistency with the following documents:

- City of Portland Comprehensive Plan updated in 2005;
- Eastern Waterfront Master Plan (adopted into the 2005 Comprehensive Plan); and
- Design Guidelines for the Eastern Waterfront.

The City's current Comprehensive Plan (Portland's Plan 2030) completed in 2017 articulates a vision of Portland's values and provides a framework for decision making revolving around the values, goals, and strategies of the City over the next decade. The proposed development remains consistent with the previous planning documents and is also consistent with Portland's Plan 2030.

11.1 Comprehensive Plan Vision Statement

Portland's Plan 2030 is guided by a vision statement for the City that includes six interconnected themes, which provide the foundation for focusing City policies and priorities identified for gauging success. The goals and implementation strategies in the Plan support the vision statement.



Figure 11-1: *Six Interconnected Themes Identified During Portland's Comprehensive Planning Process*

The Portland Foreside Development Co Phase 1 project aligns with all six themes of the vision statement, with focus on many of the specific points (listed below in italics) highlighted within those themes.

Equitable – *We (City) will remain an open and inclusive city, celebrating diversity and providing a welcoming and safe place for residents and visitors alike.*

The Portland Foreside Development provides connectivity to neighboring uses, welcoming residents of surrounding neighborhoods, visitors to the City from Ocean Gateway and the adjacent Fore Points Marina, and employees of nearby businesses. The proposed site features stairs, plaza areas and trail improvements that create permeability, are welcoming to pedestrians, and provide important public access to the waterfront. Coastal view corridors for the public are maintained and public access easements provide assurance that the site will remain open and accessible by the public.

Sustainable – *Portland has been built and rebuilt to endure; we will balance our historic fabric, sound infrastructure, and the best of new technology and design for the future.*

Portland will grow in order to sustain our community, infrastructure, and economy.

Growth should respect and seek to preserve our spectacular natural resources.

The Portland Foreside Development revitalizes and invests in the site's historic core and provides infrastructure improvements to support sustainable growth. The development provides an opportunity to grow the City's tax base, add housing, and create jobs.

Dynamic – *We will embrace innovation in order for our community to thrive.*

We will welcome new residents into our community because they enrich and sustain our city

Portland will plan for a built environment that encourages an active citizenry.

The development supports the City's continuing efforts to link its vibrant downtown to the commercial waterfront. Improvements to the Eastern Promenade trail reinforce important pedestrian and bike links to the downtown, while the shared street design prioritizes pedestrian access through the site. The space will be accessible to residents, visitors and employees from within the development, from the surrounding Portland neighborhoods, and beyond.

Secure – *We will strive to create a resilient economy through innovation, investment, and commitment to diversity.*

Portland Foreside's goal is to add to support the City's desire for a resilient economy by creating a neighborhood with a mix of uses that will enhance the Eastern Waterfront and provide opportunities for economic growth in an area that has been underutilized for decades. A well-organized development with a variety of uses will encourage t locals and visitors to enjoy the area.

Authentic – *We (City) will celebrate our city's incredible history.*

The uniqueness and integrity of our neighborhoods will be maintained and enhanced.

We will invest in and support our local economy.

We will maintain our character through preservation, innovation, and excellence in design for the built environment.

The proposed development will include a mix of new and historic buildings that will work together to create a welcoming space in Portland. High quality finishes and new construction will integrate closely with the remaining historic structures to create a neighborhood that is authentic to Portland's existing downtown but is also modern and efficient. Retail and market spaces will provide opportunities for local businesses to showcase themselves, further creating an extension of the City's existing Old Port neighborhood; while office and residential spaces will bring more people to the neighborhood on a regular basis as patrons of these local businesses.

Connected – *We will foster accessible linkages between where we live, work, shop, and play.*

We will enable meaningful access to the natural world and recreational opportunities as a central component of community health.

The new neighborhood at 58 Fore Street will remain physically connected to the rest of the City and surrounding areas through street connections on Thames Street Extension and Fore Street, as well as through pedestrian connection from the Eastern Promenade Trail and water connection from the newly constructed Fore Points Marina. The Maine Narrow Gauge Railroad will also be maintained as a vestige of the transportation rail corridor through the site. These pedestrian, water, and rail connections will all help to foster the City's goal of providing meaningful access to the nature and recreational opportunities. With office, retail, including restaurant, and residential all proposed as part of the Phase 1 Portland Foreside development, the project will create a complete neighborhood experience within itself, while also remaining connected to the adjacent Old Port neighborhood, India Street neighborhood and greater Portland.

The proposed Phase 1 development supports Portland's desire to endure by offering an opportunity to grow, change, and revitalize an area of the City that has been underutilized for many years and to support redevelopment where it makes sense within the City. The following sections describe how the proposed development will align with the policy guides associated with Portland's Plan 2030.

11.2 Comprehensive Plan Policy Guides

The City of Portland Comprehensive Plan includes eight specific policy guides focused on the topics of environment, historic resources, waterfront, economy, housing, recreation and open space, facilities and services and transportation. The discussion below emphasizes how the proposed development is consistent with each individual policy guide.

Environment Policy Guide

- Within the Environment Policy Guide, one of the local goals is to develop climate resilience through specific carbon reduction goals, comprehensive climate adaptation strategies, and protections for the City's most vulnerable infrastructure. The design team has specifically considered resiliency as part of the proposed development through building design and site layout.

- The Policy Guide also has a local goal to adopt sustainable land use and transportation policies that support connectivity, walkable neighborhoods, and multi-modal transportation. The proposed development is the first phase of the overall 58 Fore Street Master Development Plan to move forward and it was conceptualized around the ideas of connectivity and walkability. The proposed shared street concept will prioritize pedestrian movements through the site, and parking garages have been efficiently incorporated into the site layout. Pedestrians will be able to access the site directly from Munjoy Hill.

- One future strategy is improving water quality. As described by the Stormwater Management Plan attached to Section 9 of this Report, stormwater best management practices will be incorporated into the Site to provide water quality treatment.

- Another future strategy is to develop climate resilience by pursuing strategic investment where storm surge and sea level rise will have impacts, including the waterfront. The design team has considered future sea level rise, storm surge, and flooding scenarios and Phase 1 been designed to prioritize resiliency on the Site. Building finish floor elevations are established in consideration of future sea level rise. The development enables continued maintenance and improvements at the site's seawall, including the addition of Tideflex valves for backflow prevention during storm events. The development also includes the addition of stormwater treatment and conveyance systems to improve drainage and water quality.

Phase 1 of the 58 Fore Street Master Development Plan will have a positive impact on maintaining and enhancing connectivity and walkability in the east end of the City. This downtown development is in line with the goals of the City's environmental policy.

Historic Resources Policy Guide

The proposed development supports the Historic Resources Policy Guide by aligning with the following goals:

- Promote historic preservation as a key economic, sustainability, and community development strategy.
- Stabilize and enhance historic areas of the city by ensuring quality investment in existing structures and compatible infill development.
- Ensure an appropriate balance of continuity and change as Portland grows and evolves.

Portions of the proposed development are located within the Portland Company Historic District and Phase 1 of the 58 Fore Street Master Development Plan will be compatible with the major character defining elements of the district. The development has been designed to promote historic preservation as an economic, sustainability, and community development strategy. The redevelopment of this Site is based on enhancing the former Portland Company Complex components that remain through quality investment and compatible adaptive reuse. The project balances continuity and change in an evolving Portland by preserving the historic character of the site while helping to meet the demand for sustainable growth. The proposed Phase 1 work in the Portland Company Historic District has been submitted to the Portland Historic Preservation Board for a Certificate of Appropriateness. Building 12 has received a Certificate of Appropriateness from the Historic Preservation Board.

Waterfront Policy Guide

The proposed development includes the creation of a staircase associated with a public access easement from Fore Street, down through the site between Building 1A and Block 2 and connecting to the waterfront area. Promoting passive and active recreational access to the waterfront is a key goal in the Waterfront Policy Guide. This development will create public access to the waterfront in an area of the City where direct access does not currently exist by creating thoughtful linkages at the pedestrian level in a built environment. The proposed development will also promote the City's connectivity by maintaining and enhancing the existing Eastern Promenade Trail, which provides pedestrian access to both the Site and the waterfront area.

Economy Policy Guide

The proposed development directly supports goals within the Economy Policy Guide including:

- Create economic prosperity by growing Portland's tax and employment base.
- Reinforce the waterfront as a key component of Portland's economic health, balancing traditional and emerging industries with tourism and recreation.

Office and retail space created by the development will help to grow Portland's tax and employment base. Locating these types of uses in this development helps to balance activity in this part of the City between tourism and recreation and traditional and emerging industries. The proposed development intends to encourage public access by creating an authentic and dynamic environment, which will help stimulate use of the businesses located in the City's east end. Additionally, the proposed development will revitalize the area, which will ultimately result in an increased valuation of the surrounding properties.

Housing Policy Guide

The proposed development includes residential uses and supports the goals of the City's Housing Policy Guide to create complete neighborhoods. The proposed development will provide housing in close proximity to the City's urban center and transportation hubs in support of a walkable and vibrant neighborhood.

Recreation and Open Space Policy Guide

The public access to the waterfront from Fore Street being created as part of the proposed development is exciting and directly consistent with goals in this policy guide including:

- Sustain and build our system of parks, trails, and open spaces to enhance our quality of life, protect our environment, and promote the economic well-being of our remarkable city by the sea.
- Strengthen connections between open spaces.

As previously described, the proposed development will provide a public access to the waterfront directly from Fore Street, which will serve to strengthen the connection to the waterfront and provide a passive open space area that promotes quality of life. As stated in the policy guide, this connection is integral to the health and well-being of Portland's residents and visitors. The preservation of open space and revitalization of the downtown area will help the City to maintain its authentic character.

Facilities and Services Policy Guide

The infrastructure associated with the proposed development is supportive of the goal in the Facilities and Services Policy Guide focused on coordinating infrastructure planning and investments with areas of greatest anticipated growth. The buildings will require connections to water, sewer, gas, and electric utilities. Some of the infrastructure investments will be paid for privately, but the coordination and additional investments by the City are in an area where growth is supported and has been planned for. The City will realize a reduced cost for public infrastructure operations and maintenance by permitting a downtown development and leveraging existing utilities when compared to developments in other areas of Portland where new utilities are required.

11.3 Eastern Waterfront Master Plan

The Master Plan for Redevelopment of the Eastern Waterfront (EWMP) specifically acknowledges the vacant, underutilized land in the area of the project site at 58 Fore Street. The EWMP notes that, given the location of the site and proximity to water views, urban amenities, vehicular access, port access and integration with the City trail system, significant redevelopment potential exists. Redevelopment such as parking structures, intensive reuse of historic buildings, replacement of non-historic structures, and open space enhancement were all anticipated in the EWMP and are included in Phase 1 of the 58 Fore Street Master Development Plan Several principles and associated objectives for redevelopment are identified in the EWMP, including :

- *"Development within the eastern waterfront will be compatible with the surrounding areas, neighborhoods, natural environment and maritime uses."* Objectives associated with this principle that are consistent with the proposed redevelopment are the use of compatible architecture, historic preservation and adaptive reuse of

contributing historic structures, establishment of a new street and pedestrian network that integrates with the surrounding street and trail network and preservation of significant view corridors to the water and along the waterfront.

- *"Development within the eastern waterfront will create a vital and active mixed-use urban area that generates life and use every day of the year and all hours of the day."* Objectives associated with this principle that are consistent with the proposed redevelopment are the creation of mixed-used non-marine development and activities that are compatible with the use of maritime resources, the increase of the public's use of the water, waterfront and shore through public access, and maintaining and enhancing recreational trail access.
- *"Development in the eastern waterfront on piers, bulkheads and on land within 75' of mean high-water line, will give priority to compatible water-dependent and maritime uses."* Objectives associated with this principle that are consistent with the proposed redevelopment are preserving and enhancing water dependent uses by providing public physical and visual access to the water.
- *"Development in the eastern waterfront will provide a significant benefit to the City and the regional economy."* Objectives associated with this principle that are consistent with the proposed redevelopment are creating a positive economic return to City, sustaining and strengthening water-related tourism, enhancing the economic viability of the eastern waterfront's property and facilities, and assuring that development benefits the residents of the greater Portland community.

The vision for Phase 1 of the 58 Fore Street Master Development Plan was built on the foundation of the EWMP with the intent of connecting the waterfront to the City of Portland with inspiring design focused on mixed-uses, public spaces, revitalized historic structures and access to marina operations.

11.4 Design Guidelines for the Eastern Waterfront

The Design Guidelines for the Eastern Waterfront have been considered as part of the master planning of the proposed project. In general, it was noted that encouraging the adaptive reuse and sensitive rehabilitation of historic structures, increasing connections to Commercial Street and promoting shared parking with abutting uses were key points to consider in the design of the proposed project. The design team has made the following considerations:

- **Streets**
    - **Appropriate Street Design** – The proposed shared roadway has been designed to accommodate expected vehicles and pedestrians safely and efficiently while encouraging appropriate speeds. On-street parking has been provided wherever possible to provide a buffer between pedestrians and moving traffic and to serve the retail, residential, and commercial uses in the area.
    - **Sidewalks** – The proposed shared street concept along with sufficient additional walkways will accommodate pedestrians comfortably and safely. The pedestrian environment will be further enhanced using fixed street furniture, compatible and consistent lighting, and landscaping. Sidewalk cafes, temporary art installations, and seasonal lighting will also be considered to encourage year-round activity**.**
    - **View Corridors** – The site has been designed to provide for views to and from the water.
    - **Railroad Right of Way** - The adjacent rail line will be relocated and integrated with the proposed project.
    - **Underground Utilities** - Overhead utilities have been avoided; utilities have been designed to be located underground to the maximum extent practicable**.**
    - **Bicycle Safety** - The proposed roadway has been designed to accommodate bicycle traffic and safety. Bicycle racks will be provided throughout the site and in the parking garage.

- **Buildings/Architecture**
    - **Contextual Design** - Buildings have been designed in response to their context and will be compatible with the surrounding neighborhood.
    - **Pedestrian Environment -** Large expanses of blank walls have been avoided and multiple entries will be provided into buildings. Amenities such as street furniture and lighting will encourage year-round pedestrian use.
    - **Primary Entrances and Service Entrances** - Service entrances and loading facilities have been strategically located such that they will not directly impact primary entrances.
    - **Parking Structures** - Parking structures will be compatible with adjacent uses and architecture.
    - **Historic Structures** - Historically and architecturally significant structures and sites will be carefully rehabilitated in a way that is consistent with their original architectural intent.
- **Open Space**
    - **Public Open Space and Plazas** – The proposed project will contribute to the public realm through enhancement of the pedestrian environment and increased recreational opportunities.
- **Waterfront**
    - **The Eastern Waterfront** - The function of this area as an intermodal transportation center has been designed to facilitate integration and coordination of the various current and potential future modes of transportation.

The overall intent of the project has been to create a vibrant, usable space that will become an extension of the City of Portland's existing downtown. Throughout design, the project team has considered the City's various master plans, policies and guidelines with the goal of integrating the project into the existing City fabric.

13. BOUNDARY SURVEY

A boundary and topographic survey of the Site was completed by Owen Haskell, Inc. Professional Land Surveyors. The original survey was completed in August of 2016 and was revised in February of 2019. The revised survey is included with the project drawings.

13.1 Attachments

- Boundary & Topographic Survey, prepared by Owen Haskell, Inc. (uploaded to Drawings folder in Eplan)

14. AVAILABILITY & ADEQUACY OF PUBLIC UTILITIES

The proposed development will be serviced by public water, sewer, gas, and electric utilities. The proposed locations of the utility services are shown on the Utility Plan included in the Design Drawings attached to Section 3. The proposed development will also generate waste as a result of construction and post-construction operations.

14.1 Water

The proposed development will be provided with both fire protection water service and domestic water service as shown on the drawings via a private water system that will connect to the public water main on Fore Street. Woodard & Curran has been working directly with the Portland Water District (PWD) to determine the appropriate design for this work. Most recently, we have met with PWD to review the project needs and design requirements on August 16, 2019, October 8, 2019, and October 18, 2019. Based on the results of these meetings, we are in the process of designing a private water system, and we will be scheduling a follow-up meeting with PWD to review our system design. An ability to serve determination will be provided upon receipt.

14.2 Sewer

The proposed development will be provided with sanitary sewer service as shown on the drawings. The private system on the site will include a combination of gravity sewer and forcemain with a pump station that will discharge to the sewer on the Thames Street Extension. The existing sewer service on Fore Street will be abandoned. The proposed development will include restaurants, kitchens, and parking garages; grease traps and oil/water separators will be provided as shown on the drawings. The attached letter is provided to request confirmation of ability to serve the proposed development; the Wastewater Capacity Application was submitted with this letter. A copy of the City's determination will be provided upon receipt.

14.3 Gas

The proposed development will utilize natural gas service provided by Unitil. Proposed infrastructure is shown on the Utility Plan. The location and size of the gas service is being coordinated with Unitil. Most recently, we met with Unitil on September 6, 2019 to review the project needs. With final meter locations selected, the utility plan will be provided to Unitil for their review. An ability to serve determination will be provided upon receipt.

14.4 Electric

The proposed development will utilize underground electric service. Proposed infrastructure is shown on the Utility Plan. The design of the electric service is being coordinated with Central Maine Power (CMP). We met with CMP on August 29 to review the proposed Phase 1 work. We also met with CMP and the City of Portland Department of Public Works to discuss possible opportunities to collaborate with the City on utility infrastructure. Final electric layouts will be provided to CMP for their review and an ability to serve determination will be provided upon receipt.

14.5 Solid Waste

Adequate provisions for recycling and solid waste disposal have been made. All solid waste materials and recyclables generated by the proposed development will be transported and disposed of or recycled in accordance with applicable laws and regulations. Solid waste will be managed in full accordance with all applicable laws and regulations.

14.6 Construction & Demolition Debris

The proposed development will generate construction waste and demolition debris (CDD). The Contractor will be responsible for properly disposing of the CDD. The Contractor will be responsible for handling, managing, and

disposing of all waste generated by construction in accordance with the Maine Solid Waste Management Regulations and all other applicable local, state, and federal regulations.

14.7 Special & Hazardous Waste

The proposed development is not anticipated to produce any hazardous waste. Environmental assessments of the Site have been conducted and the Owner is a participant in the Maine Department of Environmental Protection Voluntary Response Action Program (VRAP). A soil management plan has been developed for the site.

14.8 Attachments

- Portland Department of Public Works Request for Ability to Serve Letter and Wastewater Capacity Application

CITY OF PORTLAND WASTEWATER CAPACITY APPLICATION

Portland Dept. of Public Works -
Water Resources
55 Portland Street,
Portland, Maine 04101-2991

Bradley Roland, P.E.
Water Resources Division
Department of Public Works
55 Portland Street
Portland, ME 04103

Date: **November 2019**

1. Please, Submit Utility, Site, and Locus Plans.

Site Address: **58 Fore Street**

Chart Block Lot Number: **018 A001**

Proposed Use: **Mixed Use Development**
Previous Use: **Industrial**
Existing Sanitary Flows: **0** GPD
Existing Process Flows: **0** GPD
Description and location of City sewer that is to receive the proposed building sewer lateral.

Proposed on-site sewer main

Site Category		
	Commercial *(see part 4 below)*	X
	Industrial *(complete part 5 below)*	
	Governmental	
	Residential	X
	Other *(specify)*	X

Clearly, indicate the proposed connections, on the submitted plans.

2. Please, Submit Contact Information.

City Planner's Name: **TBD** Phone: _____
Owner/Developer Name: **Portland Foreside Development Company, c/o David Senus, PE**
Owner/Developer Address: **254 Commercial Street, Suite 118, Portland, ME 04101**
Phone: **(207) 558-3704** Fax: **N/A** E-mail: **das@portlandforeside.com**
Engineering Consultant Name: **Woodard & Curran**
Engineering Consultant Address: **41 Hutchins Drive, Portland, ME 04101**
Phone: **(207) 558-3763** Fax: **N/A** E-mail: **lswett@woodardcurran.com**

Note: Consultants and Developers should allow +/- 15 days, for capacity status, prior to Planning Board Review.

3. Please, Submit Domestic Wastewater Design Flow Calculations.

Estimated Domestic Wastewater Flow Generated: **113,300 GPD**
Peaking Factor/ Peak Times: _____
Specify the source of design guidelines: *(i.e.__"Handbook of Subsurface Wastewater Disposal in Maine," "Plumbers and Pipe Fitters Calculation Manual," __ Portland Water District Records, __ Other (specify)*
_____

Note: Please submit calculations showing the derivation of your design flows, either on the following page, in the space provided, or attached, as a separate sheet.

4. Please, Submit External Grease Interceptor Calculations.

Total Drainage Fixture Unit (DFU) Values:
Size of External Grease Interceptor:
Retention Time:
Peaking Factor/ Peak Times:

Complete grease trap needs are TBD. 3,000 gallon grease traps have been located throughout the site to manage restaurant spaces. As final design layout progresses, more information can be provided.

Note: In determining your restaurant process water flows, and the size of your external grease interceptor, please use The Uniform Plumbing Code. Note: In determining the retention time, sixty (60) minutes is the minimum retention time. Note: Please submit detailed calculations showing the derivation of your restaurant process water design flows, and please submit detailed calculations showing the derivation of the size of your external grease interceptor, either in the space provided below, or attached, as a separate sheet.

5. Please, Submit Industrial Process Wastewater Flow Calculations **N/A**

Estimated Industrial Process Wastewater Flows Generated: _____ GPD
Do you currently hold Federal or State discharge permits? Yes ____ No ____
Is the process wastewater termed categorical under CFR 40? Yes ____ No ____
OSHA Standard Industrial Code (SIC): *(http://www.osha.gov/oshstats/sicser.html)*
Peaking Factor/Peak Process Times: _____

Note: On the submitted plans, please show where the building's domestic sanitary sewer laterals, as well as the building's industrial-commercial process wastewater sewer laterals exits the facility. Also, show where these building sewer laterals enter the city's sewer. Finally, show the location of the wet wells, control manholes, or other access points; and, the locations of filters, strainers, or grease traps.

Note: Please submit detailed calculations showing the derivation of your design flows, either in the space provided, or attached, as a separate sheet.

15. PORTLAND FIRE DEPARTMENT SITE REVIEW CHECKLIST

The items in the Portland Fire Department Site Review Checklist are addressed as follows:

- Name, address, telephone number of applicant:
  - Portland Foreside Development Company, c/o David Senus, PE
  - 254 Commercial Street, Suite 118, Portland, ME 04101
  - (207) 558-3704
- Name, address, telephone number of architect:
  - Perkins+Will, c/o Derek Johnson, LEED AP BD+C
    - 225 Franklin St, Boston, MA 02110
    - (617) 406-3430
  - Bruner/Cott, c/o Henry Moss
    - 225 Friend Street, Suite 701, Boston, MA 02114
    - (617) 492-8400
- Proposed uses of any structures [NFPA and IBC classification]:
  - The structures are mixed-use. Use classifications are provided on the code summaries included in the architectural plans.
  - Please note that Building 1A is designed to accommodate a future roof terrace. Initial construction will include perimeter 42" guardrail and two remote stairs designed to accommodate egress loading of the future building / tenant occupants of A-Assembly Use gathering. At the time of initial construction, no occupiable roof terrace area will be submitted.
- Square footage of all structures [total and per story]:
  - The square footage of all structures is provided on the architectural plans.
- Elevations of all structures:
  - The elevations of all structures are provided on the architectural plans.
- Proposed fire protection of all structures:
  - All structures shall be sprinkled.
- Hydrant locations:
  - Hydrant locations are shown on the Utility Plan.
- Water main size and location:
  - Watermain locations and sizes are shown on the Utility Plan.
- Access to all structures [min. 2 sides]:
  - Access will be provided to a minimum of two sides of all structures.
- A code summary shall be included referencing NFPA 1 and all fire department technical standards:

- The buildings will be compliant with requirements of NFPA 101: Uniform Fire Code. Automatic sprinkler systems and fire alarms will be provided as required by Use and Occupancy types. Code summaries are provided on the architectural plans.

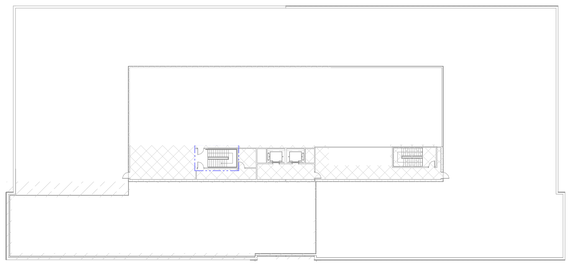

5 PENTHOUSE / ROOF CODE PLAN
1" = 30'-0"

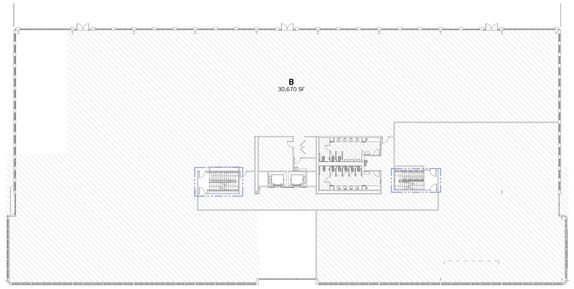

2 LEVEL 2 CODE PLAN
1" = 30'-0"

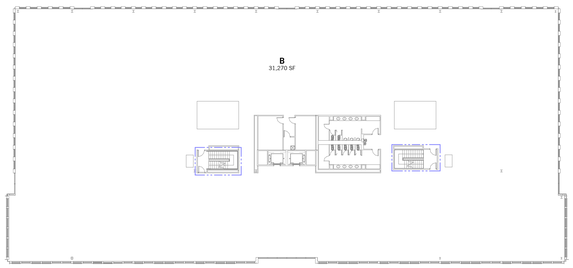

4 LEVEL 4 CODE PLAN
1" = 30'-0"

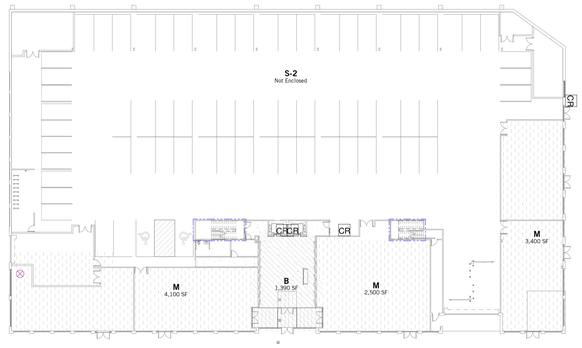

1 LEVEL 1 CODE PLAN
1" = 30'-0"

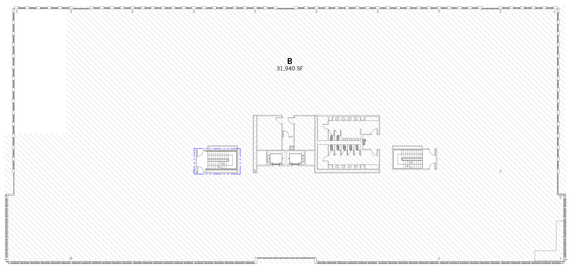

3 LEVEL 3 CODE PLAN
1" = 30'-0"

USE LEGEND

- B, BUSINESS
- M, MERCANTILE
- S-2, LOW HAZARD STORAGE

LIFE SAFETY AREA SCHEDULE	
USE CLASSIFICATION	AREA
LEVEL 1	
B, BUSINESS	1,390 SF
M, MERCANTILE	9,990 SF
S-2, LOW HAZARD STORAGE	0 SF
	11,380 SF
LEVEL 2	
B, BUSINESS	30,670 SF
	30,670 SF
LEVEL 3	
B, BUSINESS	31,940 SF
	31,940 SF
LEVEL 4	
B, BUSINESS	31,270 SF
	31,270 SF
PENTHOUSE / ROOF	
A-2, ASSEMBLY	5,550 SF
S-2, LOW HAZARD STORAGE	6,050 SF
	11,600 SF
TOTAL BUILDING SF: 10	116,850 SF

PROJECT DATA & CODE REFERENCES

PROJECT LOCATION: 58 FORE ST, PORTLAND, ME 04101
AUTHORITY HAVING JURISDICTION: PERMITTING & INSPECTIONS DEPARTMENT, CITY OF PORTLAND
PROJECT DESCRIPTION: NEW CORE & SHELL CONSTRUCTION OF 4 STORY OFFICE AND RETAIL BUILDING WITH PARKING GARAGE

APPLICABLE CODES:

BUILDING CODE:	2015 IBC, AS AMENDED BY MUBEC CHAPTER 6 + PORTLAND MUNICIPAL CODE CHAPTER 6
FIRE CODE:	NFPA 1 AND 101, AS AMENDED BY 25 M.R.S. §§ 2452 & 2465 + PORTLAND MUNICIPAL CODE CHAPTER 10
PLUMBING CODE:	2015 UPC, AS AMENDED BY 32 M.R.S. §3403-B
MECHANICAL CODE:	GUIDELINES, NOT MANDTORY: ASHRAE 62.1, ASHRAE 62.2, ASHRAE 90.1; E-1465-2008
ELECTRICAL CODE:	2017 NEC, AS AMENDED BY M.R.S. §3403-B.
ENERGY CODE:	2009 IECC, AS AMENDED BY MUBEC CHAPTER 6
ELEVATOR CODE:	MAINE ELEVATOR CODE, 32 M.R.S. §15206
ACCESSIBILITY:	MAINE HUMAN RIGHTS ACT, ADOPTED 5 M.R.S. CHAPTER 4 & 5 + 2010 ADA STANDARDS FOR ACCESSIBLE DESIGN
OTHER:	VARIOUS CODES AND STANDARDS FOR FUEL / OIL / PROPANE / GAS BURNING EQUIPMENT

GENERAL CODE SUMMARY

USES & OCCUPANCY CLASSIFICATION:

BUSINESS GROUP (B)	UPPER LEVELS
MERCANTILE (M)	LEVEL 1 RETAIL
LOW HAZARD STORAGE (S-2)	LEVEL 1 PARKING GARAGE, MEP ROOMS, PENTHOUSE

TYPE OF CONSTRUCTION:

CONSTRUCTION TYPE	IIA
FIRE PROTECTION	BUILDING IS FULLY SPRINKLERED
NUMBER OF STORIES	4 LEVELS AT OR BELOW GRADE PLUS MECHANICAL PENTHOUSE
BUILDING HEIGHT	VARIES; 59.5' MAX ABOVE GRADE (PER ZONING), 46.5' AVG HEIGHT

FLOOR AREAS

LEVEL 1	43,240 SF	
LEVEL 2	34,330 SF	
LEVEL 3	34,330 SF	
LEVEL 4	34,330 SF	
PENTHOUSE	6,450 SF	(UNOCCUPIED)
TOTAL GSF	152,670 SF	

BUILDING ELEMENT FIRE RESISTANCE RATINGS	**CONSTRUCTION:**
SHAFTS	2 HR (≥ 4 STORIES), 1 HR (< 4 STORIES)
ELEVATOR MACHINE / CONTROLS ROOM	2 HR
NON-SPRINKLERED ELECTRICAL ROOM	2 HR
EMERGENCY GENERATOR ROOM	2 HR FIRE BARRIER
DRY TYPE TRANSFORMER ROOM > 35,000V	3 HR
DRY TYPE TRANSFORNER ROOM > 112.5 KVA	1 HR
BOILER ROOM WHERE LARGEST PIECE OF EQUIPMENT IS > 15 PSI AND 10 HP	SMOKE TIGHT
FURNACE ROOM ANY EQUIPMENT IS > 400,000 BTU PER HOUR INPUT	SMOKE TIGHT

MINIMUM INTERIOR WALL & CEILING FINISH REQ'S (PER ASTM E84 OR UL 723)

OCCUPANCY CLASSIFICATION	EXIT ENCLOSURES	CORRIDORS, EXIT ACCESS, STAIRWAYS, RAMPS	ROOMS AND ENCLOSED SPACES
A	B	B	B
B	B	C	C
S	C	C	C

INTERIOR FLOOR FINISH: INTERIOR FLOOR COVERING MATERIALS TO COMPY W/ DOC FF-1 PILL TEST (CPSC 16 CFR PART 1630), 780 CMR 804.4.1. NEW FLOOR FINISHES AND COVERINGS OF A TRADITIONAL TYPE, SUCH AS WOOD, VINYL, LINOLEUM, AND RESILIENT FLOOR COVERING MATERIALS NOT COMPOSED OF FIBERS ARE PERMITTED THROUGHOUT (780 CMR 804.1 EXCEPTION)

CODE COMPLIANCE PLAN LEGEND

- NEW PARTITION
- NON-RATED SMOKE PARTITION
- 1 HR FIRE BARRIER PARTITION
- 2 HR FIRE BARRIER PARTITION
- FIRE EXTINGUISHER
- 00'-0" — TRAVEL DISTANCE - LONGEST ROUTE TO AN EXIT
- EXIT — EXIT LOCATION
- MHO — MAGNETIC HOLD OPEN

DOOR	
34" CLR	ACTUAL CLEAR WIDTH PROVIDED
0.2" / OCC	EXIT WIDTH FACTOR
226 OCC	MAX OCCUPANT LOAD SUPPORTED
192 OCC	ACTUAL OCCUPANT LOAD

STAIR 1	
44" CLR	ACTUAL STAIR WIDTH PROVIDED
0.3" / OCC	STAIR WIDTH FACTOR
226 OCC	MAX OCCUPANT LOAD SUPPORTED
192 OCC	ACTUAL OCCUPANT LOAD

Perkins&Will
225 Franklin Street, Suite 1100
Boston, MA 02110
t 617.478.0300
www.perkinswill.com

CONSULTANTS

LANDSCAPE ARCHITECT
Michael Boucher
457 US Route 1 Suite 2
Freeport, Maine
t 207.865.1080

CIVIL ENGINEER
Woodard & Curran
41 Hutchins Dr
Portland, ME 04102
t 207.774.2112

STRUCTURAL + MEP ENGINEER
Rist-Frost-Shumway Engineering
50 Milk Street, 16th Floor
Boston, MA 02109
t 617.494.1464

PROJECT

BUILDING 1A
58 FORE ST
PORTLAND, ME 04101

FORESIDE
PORTLAND, MAINE
254 COMMERCIAL ST
SUITE 118
PORTLAND, ME 04101

KEYPLAN

NOT FOR CONSTRUCTION

ISSUE CHART

MARK	ISSUE	DATE

DESIGN DEVELOPMENT
JULY 26, 2019

Job Number	157087.000
Drawn	Author
Checked	Checker
Approved	Approver

TITLE

CODE COMPLIANCE DIAGRAMS

SHEET NUMBER

G10-01

Copyright © 2019 Perkins+Will

7/26/2019 12:19:30 AM 58 Fore St_Building 1A_v2019_detached.rvt

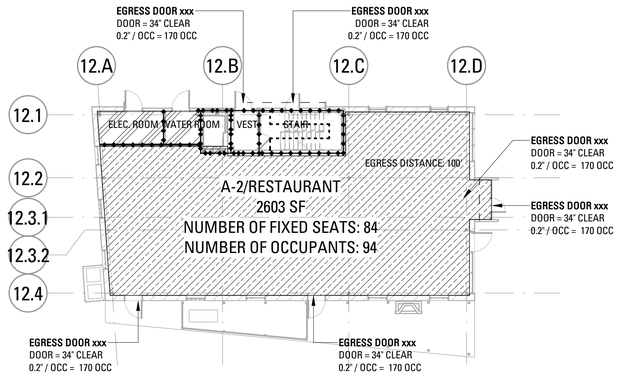

1 BUILDING 12 - GROUND FLOOR PLAN
SCALE: 1/16" = 1'-0"

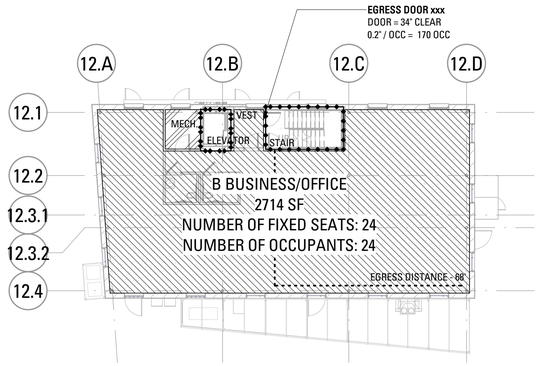

2 BUILDING 12 - SECOND FLOOR PLAN
SCALE: 1/16" = 1'-0"

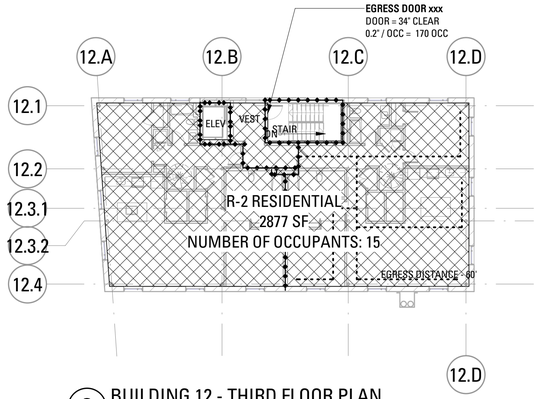

3 BUILDING 12 - THIRD FLOOR PLAN
SCALE: 1/16" = 1'-0"

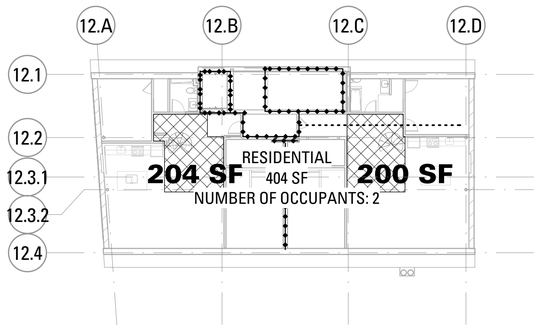

4 BUILDING 12 - THIRD FLOOR MEZZ LEVEL
SCALE: 1/16" = 1'-0"

CODE KEY

- A-2 ASSEMBALY/RESTAURANT
- B BUSINESS
- S-2 STORAGE / MECHANICAL
- R-2 RESIDENTIAL
- 1-HOUR FIRE RESISTANT ASSEMBLY
- 2-HOUR FIRE RESISTANT ASSEMBLY
- SMOKE BARRIER ASSEMBLY
- OCCUPANT LOAD
- PATH OF TRAVEL

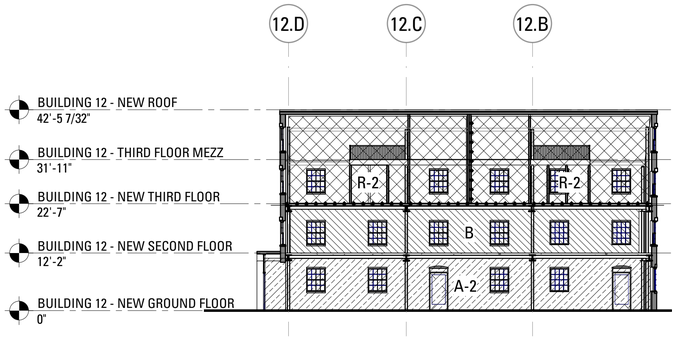

5 BUILDING 12 - LONG SECTION CODE
SCALE: 1/16" = 1'-0"

PROJECT DATA

PROJECT LOCATION: BUILDING 12, BLOCK 1 DEVELOPMENT
PORTLAND, ME 04101

AUTHORITY HAVING JURISDICTION: PERMITTING & INSPECTIONS DEPARTMENT, CITY OF PORTLAND
MAINE OFFICE OF THE STATE FIRE MARSHAL

PROJECT DESCRIPTION: NEW CONSTRUCTION OF A 3 STORY MIXED USE BUILDING CONTAINING ASSEMBLY, OFFICE, AND RESIDENTIAL USES.

APPLICABLE CODES

BUILDING MUBC – MAINE UNIFORM BUILDING CODE, AN AMENDED VERSION OF THE 2015 INTERNATIONAL BUILDING CODE (IBC).
PORTLAND MUNICIPAL CODE CHAPTER 6

FIRE PORTLAND MUNICIPAL CODE CHAPTER 10
NFPA 1, UNIFORM FIRE CODE, 2006 EDITION AS ADOPTED BY THE RULES OF THE STATE FIRE MARSHAL
NFPA 1, UNIFORM FIRE CODE, 2015 EDITION AS ADOPTED BY THE MUBC NFPA 101, LIFE SAFETY CODE, 2009 EDITION AS ADOPTED AND AMENDED BY THE RULES OF THE STATE FIRE MARSHAL

PLUMBING MAINE STATE PLUMBING CODE, AN AMENDED VERSION OF THE 2015 UNIFORM PLUMBING CODE (UPC)

MECHANICAL 2013 ASHRAE 62.1, VENTILATION FOR ACCEPTABLE INDOOR AIR QUALITY

ELECTRICAL 2014 NFPA 70, NATIONAL ELECTRIC CODE

ENERGY MUBEC – MAINE UNIFORM BUILDING AND ENERGY CODE, AN AMENDED VERSION OF THE 2009 INTERNATIONAL ENERGY CONSERVATION CODE

ELEVATOR MAINE ELEVATOR & TRAMWAY RULES & LAWS, AN AMENDED VERSION OF THE 2013 ASME A.17.1, SAFETY CODE FORE ELEVATORS AND ESCALATORS

ACCESSIBILITY: 2010 ADA STANDARDS FOR ACCESSIBLE DESIGN
2009 ICC A117.1, ACCESSIBLE AND USABLE BUILDINGS AND FACILITIES

OTHER: NATIONAL FIRE PROTECTION ASSOCIATION (NFPA) CODES AND STANDARDS, AS REFERENCED BY THE ABOVE CODES AND THE RULES OF THE STATE FIRE MARSHAL

GENERAL CODE SUMMARY

USE & OCCUPANCY CLASSIFICATION:

CLASSIFICATION	FLOOR	USE
ASSEMBLY (GROUP A-2)	GROUND FLOOR	RESTAURANT
BUSINESS (GROUP B)	SECOND FLOOR	OFFICES
RESIDENTIAL (GROUP R-2)	THIRD FLOOR	APARTMENTS
STORAGE (GROUP S-2)	ALL FLOORS	MEP/BACK OF HOUSE

TYPE OF CONSTRUCTION

CONSTRUCTION TYPE VB, V (000)

GIVEN THE USES WITHIN THE BUILDING, A 1-HOUR HORIZONTAL SEPARATION IS REQUIRED BETWEEN FLOOR 2 AND FLOOR 3 TO PROVIDE AN OCCUPANCY SEPARATION (BASED ON HEIGHT LIMITATIONS FOR GROUP A) AS WELL AS A DWELLING UNIT SEPARATION FOR THE THIRD FLOOR RESIDENTIAL UNITS. SUPPORTING CONSTRUCTION IS REQUIRED FOR THE 1-HOUR OCCUPANCY SEPARATION PER MUBC 711.2.3.
THE THIRD FLOOR AND MEZZANINE WILL ALSO REQUIRE VERTICAL DWELLING UNIT SEPARATIONS BETWEEN UNITS. THE WALLS MUST BE CONSTRUCTED AS 30-MINUTE FIRE PARTITIONS.

FIRE PROTECTION

THE BUILDING WILL BE PROVIDED WITH A NEW SPRINKLER SYSTEM COMPLYING WITH NFPA 13. THE BUILDING WILL BE PROVIDED WITH A NEW FIRE ALARM SYSTEM COMPLYING WITH NFPA 72.

NUMBER OF STORIES

3 STORIES, WITH MEZZANINE ABOVE THE THIRD FLOOR WITHIN THE RESIDENTIAL UNITS.

THE MEZZANINE IS REQUIRED TO MEASURE LESS THAN 1/3 THE AREA OF THE ROOM TO WHICH IT IS OPEN TO (MUBC 505.2.1 AND NFPA 101 8.6.9.2.1). THE MEZZANINE MEASURE APPROXIMATELY 612 SF, AND ARE OPEN TO LIVING AREAS THAT MEASURE APPROXIMATELY 790 SF RESULTING IN COMPLIANCE AS A MEZZANINE.

BUILDING HEIGHT 42'-5 7/32" ABOVE GRADE

FLOOR AREA

GROUND FLOOR	2,603 SF
SECOND FLOOR	2,714 SF
THIRD FLOOR	2,877 SF
MEZZANINE	404 SF
TOTAL	**8,598 SF**

BUILDING ELEMENT FIRE RESISTANCE RATINGS **CONSTRUCTION:**

SHAFTS	1 HOUR
ELEVATOR MACHINE/ CONTROLS	2 HOUR
NON-SPRINKLERED ELECTRICAL ROOM	2 HOUR
EMERGENCY GENERATOR ROOM	2 HOUR
EMERGENCY ELECTRICAL ROOM	2 HOUR
DRY TYPE TRANSFORMER ROOM > 35,000 V	3 HOUR
DRY TYPE TRANSFORMER ROOM > 112.5 KVA	1 HOUR
HORIZONTAL EXIT	2 HOUR
BOILER ROOM WHERE LARGEST PIECE OF EQUIPMENT IS > 15 PSI AND 10 HP	SMOKE TIGHT
FURNACE ROOM WHERE ANY EQUIPMENT IS > 400,000 BTU PER HOUR INPUT	SMOKE TIGHT

MINIMUM INTERIOR WALL & CEILING FINISH REQ'S (PER ASTM E84 OR UL 723)

OCCUPANCY CLASSIFICATION	EXIT ENCLOSURES	CORRIDORS, EXIT ACCESS, STAIRWAYS, RAMPS	ROOMS AND ENCLOSED SPACES
A-2	B	B	C
B	B	C	C
R-2	C	C	C
S-2	C	C	C

INTERIOR FLOOR FINISH

INTERIOR FLOOR COVERING MATERIALS TO COMPLY WITH DOC FF-1 PILL TEST (CPSC 16 CFR PART 1630), MUBC 804.4.1. NEW FLOOR FINISHES AND COVERINGS OF A TRADITIONAL TYPE, SUCH AS WOOD, VINYL, LINOLEUM, AND RESILIENT FLOOR COVERING MATERIAL NOT COMPOSED OF FIBERS ARE PERMITTED THROUGHOUT (MUBC 804.1 EXCEPTION).

MEANS OF EGRESS

THE BUILDING IS PROVIDED WITH A SINGLE EXIT. THIS CONFIGURATION RESULTS IN THE FOLLOWING RESTRICTIONS TO THE SECOND AND THIRD FLOORS.
THE SECOND FLOOR IS LIMITED TO A TOTAL OCCUPANT LOAD OF 29 PEOPLE AND THE SINGLE STAIR MUST BE REACHABLE WITHIN 75 FEET FROM THE MOST REMOTE CORNER OF THE FLOOR (MUBC TABLE 1006.3.2(2)). ADDITIONALLY, THE OFFICE SPACE MUST BE FOR A SINGLE TENANT ONLY AND THE TOTAL TRAVEL DISTANCE FROM THE MOST REMOTE AREA OF THE FLOOR TO THE OUTSIDE MUST BE 100 FEET OR LESS WHICH IS MORE RESTRICTIVE THAN THE BUILDING CODE TRAVEL DISTANCE REQUIREMENTS (NFPA 101 38.2.4.6). THE THIRD FLOOR/MEZZANINE IS LIMITED TO A MAXIMUM OF FOUR (4) DWELLING UNITS AND THE SINGLE STAIR MUST BE REACHABLE WITHIN 125 FEET FROM THE MOST REMOTE AREA OF THE UNITS (INCLUDING TRAVEL DOWN THE INTERIOR UNIT STAIRS) (MUBC TABLE 1006.3.2(1). ADDITIONALLY, THE CORRIDOR AT THE THIRD FLOOR IS REQUIRED TO BE 1-HOUR FIRE RATED AND THE MAXIMUM DISTANCE FROM THE UNIT DOOR TO THE STAIR DOOR IS LIMITED TO 35 FEET (NFPA 101 30.2.4.4). THE MEZZANINE WITHIN THE RESIDENTIAL UNITS IS SERVED BY A SPIRAL STAIR. A SPIRAL STAIR IS PERMITTED IN ACCORDANCE WITH MUBC 1011.10 AND NFPA 101 30.2.2.3.3.

LIFE SAFETY AREA SCHEDULE

	OCCUPANCY	FUNCTION	LOAD FACTOR	AREA	OCCUPANTS
GROUND FLOOR	A-2 ASSEMBALY	RESTAURANT	15 SF	2,604 SF	SEE PLAN
	ACCESSORY / MECHANICAL		300 SF	149 SF	
SECOND FLOOR	B BUSINESS	OFFICE	15 SF	2,714 SF	SEE PLAN
	ACCESSORY / MECHANICAL		300 SF	63 SF	
THIRD FLOOR	R-2 RESIDENTIAL	APARTMENT	200 SF	2877 SF	SEE PLAN
	ACCESSORY / MECHANICAL		300 SF		
THIRD FL. MEZZ	R-2 RESIDENTIAL	APARTMENT	200 SF	404 SF	SEE PLAN
	ACCESSORY / MECHANICAL		300 SF	200 SF	

Bruner/Cott
ARCHITECTS
225 Friend St., Suite 701
Boston, MA 02114
617.492.8400
www.brunercott.com

Rev.	Date	Remarks

PORTLAND FORESIDE - BUILDING 12

Date	OCTOBER 25, 2019
Scale	1/16" = 1'-0"
Project Number	19.007
Drawn By	Author

NOT FOR CONSTRUCTION

CODE SUMMARY

LS-000

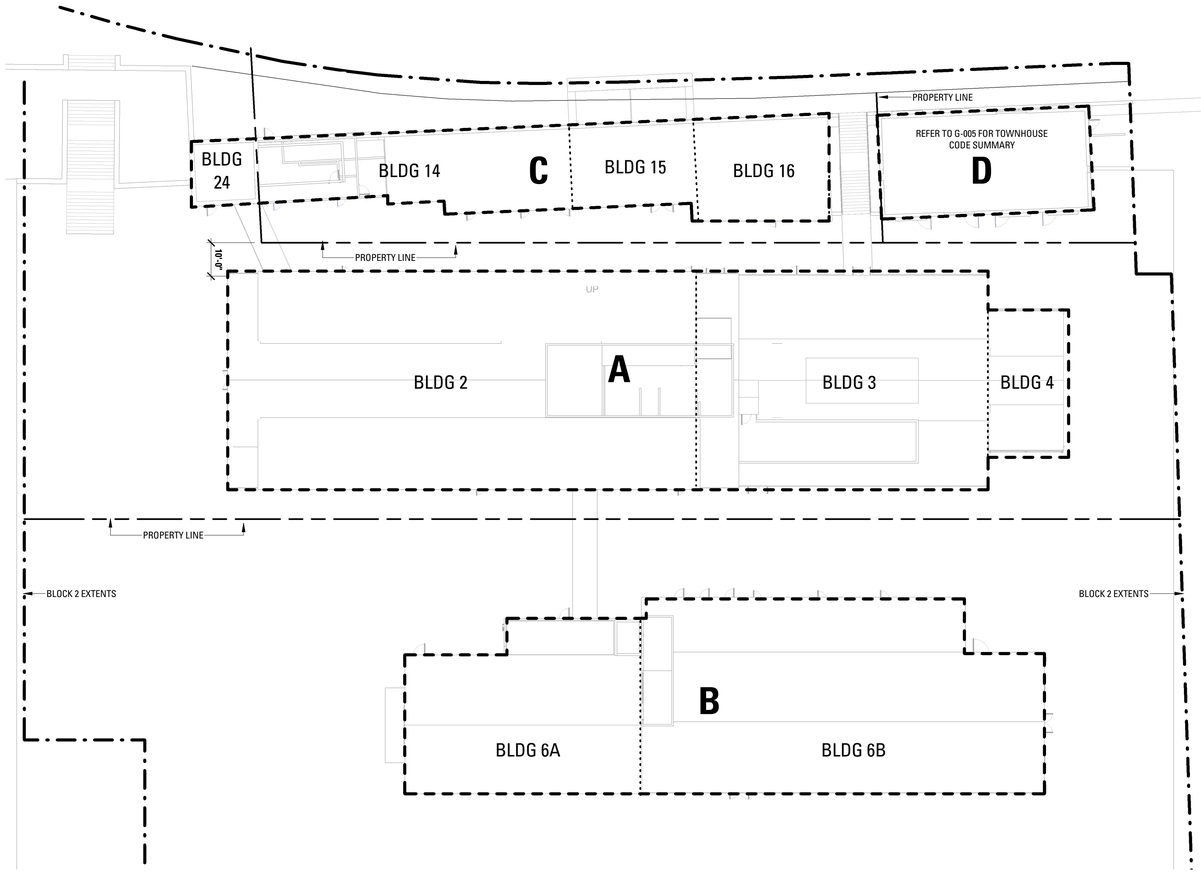

BLOCK 2 KEY PLAN

PROJECT DATA

PROJECT LOCATION:	58 FORE STREET, PORTLAND, ME 04101 BLOCK 2 DEVELOPMENT
AUTHORITY HAVING JURISDICTION:	PERMITTING & INSPECTIONS DEPARTMENT, CITY OF PORTLAND MAINE OFFICE OF THE STATE FIRE MARSHAL
PROJECT DESCRIPTION:	RENOVATION OF COMPLEX OF HISTORIC BUILDINGS OF THE PORTLAND COMPANY. SEE PROJECT DESCRIPTIONS OF EACH BUILDING.

APPLICABLE CODES

BUILDING	MUBC – MAINE UNIFORM BUILDING CODE, AN AMENDED VERSION OF THE 2015 INTERNATIONAL BUILDING CODE (IBC). MUEBC – MAINE UNIFORM EXISTING BUILDING CODE, AN AMENDED VERSION OF THE 2015 INTERNATIONAL EXISTING BUILDING CODE. PORTLAND MUNICIPAL CODE CHAPTER 6
FIRE	PORTLAND MUNICIPAL CODE CHAPTER 10 NFPA 1, UNIFORM FIRE CODE, 2006 EDITION AS ADOPTED BY THE RULES OF THE STATE FIRE MARSHAL NFPA 1, UNIFORM FIRE CODE, 2015 EDITION AS ADOPTED BY THE MUBC NFPA 101, LIFE SAFETY CODE, 2009 EDITION AS ADOPTED AND AMENDED BY THE RULES OF THE STATE FIRE MARSHAL
PLUMBING	MAINE STATE PLUMBING CODE, AN AMENDED VERSION OF THE 2015 UNIFORM PLUMBING CODE (UPC)
MECHANICAL	2013 ASHRAE 62.1, VENTILATION FOR ACCEPTABLE INDOOR AIR QUALITY
ELECTRICAL	2014 NFPA 70, NATIONAL ELECTRIC CODE
ENERGY	MUBEC – MAINE UNIFORM BUILDING AND ENERGY CODE, AN AMENDED VERSION OF THE 2009 INTERNATIONAL ENERGY CONSERVATION CODE
ELEVATOR	MAINE ELEVATOR & TRAMWAY RULES & LAWS, AN AMENDED VERSION OF THE 2013 ASME A.17.1, SAFETY CODE FORE ELEVATORS AND ESCALATORS
ACCESSIBILITY:	2010 ADA STANDARDS FOR ACCESSIBLE DESIGN 2009 ICC A117.1, ACCESSIBLE AND USABLE BUILDINGS AND F FACILITIES
OTHER:	NATIONAL FIRE PROTECTION ASSOCIATION (NFPA) CODES AND STANDARDS, AS REFERENCED BY THE ABOVE CODES AND THE RULES OF THE STATE FIRE MARSHAL

GENERAL CODE SUMMARY

BLOCK 2, GROUP A, BUILDINGS 2, 3, 4

PROJECT DESCRIPTION:
CHANGE OF USE OF A 3-STORY EXISTING BUILDING CONTAINING INDUSTRIAL, FACTORY, AND BUSINESS USE, WHICH IS CURRENTLY BEING USED FOR TEMPORARY SPECIAL ASSEMBLY EVENTS. THE PROPOSED USES INCLUDE OFFICE AND ASSEMBLY SPACE. THE PROJECT WILL ALSO INCLUDE A BUILDING ADDITION, WHICH IS A MECHANICAL/STORAGE MEZZANINE.

USE & OCCUPANCY CLASSIFICATION:

CLASSIFICATION	FLOOR	USE
ASSEMBLY (GROUP A-2)	GROUND FLOOR	RESTAURANT
ASSEMBLY (GROUP A-3)	SECOND FLOOR	EVENT SPACE
BUSINESS (GROUP B)	THIRD FLOOR	OFFICES
STORAGE (GROUP S-2)	ALL FLOORS	MEP/BACK OF HOUSE

TYPE OF CONSTRUCTION

CONSTRUCTION TYPE IIIB, III (200)
THE PROJECT WILL BE APPLYING FOR A COMPLIANCE ALTERNATIVE TO ADDRESS THE OVERALL CONSTRUCTION TYPE OF THE BUILDING RELATIVE TO THE ASSEMBLY USE AND OCCUPANT LOAD ON THE SECOND FLOOR (EXCEEDS THE 300 PERSON LIMIT AT THE SECOND FLOOR PER TYPE IIIB CONSTRUCTION). THE COMPLIANCE ALTERNATIVE WILL COMMIT TO A 1-HOUR FLOOR/CEILING ASSEMBLY BETWEEN THE FIRST AND SECOND FLOOR, WITH SUPPORTING CONSTRUCTION THROUGHOUT THE FIRST FLOOR.

FIRE PROTECTION THE BUILDING WILL BE PROVIDED WITH A NEW SPRINKLER SYSTEM COMPLYING WITH NFPA 13. THE BUILDING WILL BE PROVIDED WITH A NEW VOICE EVACUATION FIRE ALARM SYSTEM COMPLYING WITH NFPA 72.

NUMBER OF STORIES 3 STORIES, WITH MEZZANINE.

THE PROJECT INCLUDES THE ADDITION OF A MEZZANINE ABOVE THE FIRST FLOOR. THE MEZZANINE IS REQUIRED TO MEASURE LESS THAN 1/3 THE AREA OF THE ROOM TO WHICH IT IS OPEN TO (MUBC 505.2.1 AND NFPA 101 8.6.9.2.1). THE MEZZANINE MEASURES 3,789 SF, REQUIRING THE FIRST FLOOR TO HAVE AN OPEN AREA OF AT LEAST 11,367 SF.

BUILDING HEIGHT 43'-9" ABOVE GRADE

FLOOR AREAS

GROUND FLOOR	14,110 SF
MEZZANINE	3,789 SF
SECOND FLOOR	14,725 SF
THIRD FLOOR	8,730 SF
TOTAL	41,354 SF

BUILDING ELEMENT FIRE RESISTANCE RATINGS **CONSTRUCTION**

SHAFTS	1 HOUR
ELEVATOR MACHINE/ CONTROLS	2 HOUR
NON-SPRINKLERED ELECTRICAL ROOM	2 HOUR
EMERGENCY GENERATOR ROOM	2 HOUR
EMERGENCY ELECTRICAL ROOM	2 HOUR
DRY TYPE TRANSFORMER ROOM > 35,000 V	3 HOUR
DRY TYPE TRANSFORMER ROOM > 112.5 KVA	1 HOUR
HORIZONTAL EXIT	2 HOUR
BOILER ROOM WHERE LARGEST PIECE OF EQUIPMENT IS > 15 PSI AND 10 HP	SMOKE TIGHT
FURNACE ROOM WHERE ANY EQUIPMENT IS > 400,000 BTU PER HOUR INPUT	SMOKE TIGHT

MINIMUM INTERIOR WALL & CEILING FINISH REQ'S (PER ASTM E84 OR UL 723)

OCCUPANCY CLASSIFICATION	EXIT ENCLOSURES	CORRIDORS, EXIT ACCESS, STAIRWAYS, RAMPS	ROOMS AND ENCLOSED SPACES
A-2, A-3	B	B	B
B	B	C	C
S-2	C	C	C

INTERIOR FLOOR FINISH

INTERIOR FLOOR COVERING MATERIALS TO COMPLY WITH DOC FF-1 PILL TEST (CPSC 16 CFR PART 1630), MUBC 804.4.1. NEW FLOOR FINISHES AND COVERINGS OF A TRADITIONAL TYPE, SUCH AS WOOD, VINYL, LINOLEUM, AND RESILIENT FLOOR COVERING MATERIAL NOT COMPOSED OF FIBERS ARE PERMITTED THROUGHOUT (MUBC 804.1 EXCEPTION).

MEANS OF EGRESS
THE MEZZANINE IS PROVIDED WITH ACCESS TO TWO (2) INTERIOR EXIT STAIR ENCLOSURES. SINCE THE MEZZANINE IS PROVIDED WITH TWO (2) MEANS OF EGRESS THE MEZZANINE CAN BE ENCLOSED IN FULL HEIGHT WALLS (MUBC 505.2.3 AND NFPA 101 8.6.9.3.2).

THE COMPLIANCE ALTERNATIVE FOR THE BUILDING WILL REQUEST A MAXIMUM OCCUPANT LOAD OF 800 PEOPLE FOR THE SECOND FLOOR. THE FLOOR IS SERVED BY TWO (2) INTERIOR EXIT STAIR ENCLOSURES AT THE CENTER OF THE FLOOR PLAN. ADDITIONALLY, THE PROJECT WILL BE PROVIDED WITH AN EXIT VIA A PEDESTRIAN WALKWAY (BRIDGE) TO BUILDING 24 WITHIN BLOCK 2 AND A PEDESTRIAN WALKWAY (BRIDGE) TO FORE STREET.

THE THIRD FLOOR CONSISTS PRIMARILY OF OFFICE SPACE AND IS PROVIDED WITH ACCESS TO TWO (2) INTERIOR EXIT STAIR ENCLOSURES AND THE BRIDGE TO BUILDING 24.

NOTE THAT PEDESTRIAN WALKWAYS/BRIDGES ARE REQUIRED TO COMPLY WITH MUBC 3104 AND NFPA 101 7.2.4.4 AND SERVE AS HORIZONTAL EXITS FROM BUILDING 2/3. THE EXTERIOR WALL OF BUILDING 2/3 AT THE PEDESTRIAN WALKWAYS/BRIDGES MUST BE 2-HOUR FIRE RATED FOR 10 FEET IN ALL DIRECTIONS. OPENINGS MUST BE ¾-HOUR FIRE RATED DOORS OR FIXED WINDOWS (NFPA 101 7.2.4.4.2). THE PEDESTRIAN WALKWAYS/BRIDGES WILL BE OPEN ALONG THE SIDES AND MUST BE PROTECTED TO PREVENT THE ACCUMULATION OF SNOW AND ICE (NFPA 101 7.2.4.4.7).

BLOCK 2, GROUP B, BUILDING 6A/6B

PROJECT DESCRIPTION: CHANGE OF USE OF A 3 STORY EXISTING BUILDING CONTAINING INDUSTRIAL, FACTORY, AND BUSINESS USE TO OFFICE, RETAIL, AND ASSEMBLY SPACE.

USE & OCCUPANCY CLASSIFICATION:

CLASSIFICATION	FLOOR	USE
ASSEMBLY (GROUP A-2)	GROUND FLOOR	RESTAURANT
ASSEMBLY (GROUP A-3)	SECOND FLOOR	EVENT SPACE
BUSINESS (GROUP B)	THIRD FLOOR	OFFICES
RETAIL (GROUP M)	GROUND FLOOR	VARIETY STORES
STORAGE (GROUP S-2)	ALL FLOORS	MEP/BACK OF HOUSE

TYPE OF CONSTRUCTION:

CONSTRUCTION TYPE IIIB, III (200)

FIRE PROTECTION THE BUILDING WILL BE PROVIDED WITH A NEW SPRINKLER SYSTEM COMPLYING WITH NFPA 13. THE BUILDING WILL BE PROVIDED WITH A NEW VOICE EVACUATION FIRE ALARM SYSTEM COMPLYING WITH NFPA 72.

NUMBER OF STORIES 3 STORIES

BUILDING HEIGHT 36'-0" ABOVE GRADE

FLOOR AREAS

GROUND FLOOR	10,135 SF
SECOND FLOOR	3,625 SF
THIRD FLOOR	3,620 SF
TOTAL	17,380 SF

BUILDING ELEMENT FIRE RESISTANCE RATINGS **CONSTRUCTION:**

SHAFTS	1 HOUR
ELEVATOR MACHINE/ CONTROLS	2 HOUR
NON-SPRINKLERED ELECTRICAL ROOM	2 HOUR
EMERGENCY GENERATOR ROOM	2 HOUR
EMERGENCY ELECTRICAL ROOM	2 HOUR
DRY TYPE TRANSFORMER ROOM > 35,000 V	3 HOUR
DRY TYPE TRANSFORMER ROOM > 112.5 KVA	1 HOUR
HORIZONTAL EXIT	2 HOUR
BOILER ROOM WHERE LARGEST PIECE OF EQUIPMENT IS > 15 PSI AND 10 HP	SMOKE TIGHT
FURNACE ROOM WHERE ANY EQUIPMENT IS > 400,000 BTU PER HOUR INPUT	SMOKE TIGHT

MINIMUM INTERIOR WALL & CEILING FINISH REQ'S (PER ASTM E84 OR UL 723)

OCCUPANCY CLASSIFICATION	EXIT ENCLOSURES	CORRIDORS, EXIT ACCESS, STAIRWAYS, RAMPS	ROOMS AND ENCLOSED SPACES
A-2	B	B	C
M	B	C	C
S-2	C	C	C

INTERIOR FLOOR FINISH

INTERIOR FLOOR COVERING MATERIALS TO COMPLY WITH DOC FF-1 PILL TEST (CPSC 16 CFR PART 1630), MUBC 804.4.1. NEW FLOOR FINISHES AND COVERINGS OF A TRADITIONAL TYPE, SUCH AS WOOD, VINYL, LINOLEUM, AND RESILIENT FLOOR COVERING MATERIAL NOT COMPOSED OF FIBERS ARE PERMITTED THROUGHOUT (MUBC 804.1 EXCEPTION).

BLOCK 2, GROUP C, BUILDINGS 14, 15, 16, 24

PROJECT DESCRIPTION: CHANGE OF USE OF A 3 STORY EXISTING BUILDING CONTAINING INDUSTRIAL, FACTORY, AND BUSINESS USE TO RETAIL AND ASSEMBLY SPACE.

USE & OCCUPANCY CLASSIFICATION:

CLASSIFICATION	FLOOR	USE
ASSEMBLY (GROUP A-2)	ALL FLOORS	RESTAURANT
RETAIL (GROUP M)	GROUND FLOOR	SHOPS
STORAGE (GROUP S-2)	ALL FLOORS	MEP/BACK OF HOUSE

TYPE OF CONSTRUCTION:
CONSTRUCTION TYPE VA, V (111)
MINIMALLY THE BUILDING IS REQUIRED TO BE OF TYPE VA CONSTRUCTION (1-HOUR) TO PERMIT AN ASSEMBLY USE AT THE THIRD FLOOR. FIRE PROTECTION THE BUILDING WILL BE PROVIDED WITH A NEW SPRINKLER SYSTEM COMPLYING WITH NFPA 13. THE BUILDING WILL BE PROVIDED WITH A NEW VOICE EVACUATION FIRE ALARM SYSTEM COMPLYING WITH NFPA 72.

NUMBER OF STORIES 3 STORIES
BUILDING HEIGHT 50' ABOVE GRADE [60' MAX FOR TYPE VA]
FLOOR AREAS

GROUND FLOOR	5,775 SF
SECOND FLOOR	2,000 SF
THIRD FLOOR	710 SF
TOTAL	8,485 SF

BUILDING ELEMENT FIRE RESISTANCE RATINGS **CONSTRUCTION:**

SHAFTS	1 HOUR
ELEVATOR MACHINE/ CONTROLS	2 HOUR
NON-SPRINKLERED ELECTRICAL ROOM	2 HOUR
EMERGENCY GENERATOR ROOM	2 HOUR
EMERGENCY ELECTRICAL ROOM	2 HOUR
DRY TYPE TRANSFORMER ROOM > 35,000 V	3 HOUR
DRY TYPE TRANSFORMER ROOM > 112.5 KVA	1 HOUR
HORIZONTAL EXIT	2 HOUR
BOILER ROOM WHERE LARGEST PIECE OF EQUIPMENT IS > 15 PSI AND 10 HP	SMOKE TIGHT
FURNACE ROOM WHERE ANY EQUIPMENT IS > 400,000 BTU PER HOUR INPUT	SMOKE TIGHT

MINIMUM INTERIOR WALL & CEILING FINISH REQ'S (PER ASTM E84 OR UL 723)

OCCUPANCY CLASSIFICATION	EXIT ENCLOSURES	CORRIDORS, EXIT ACCESS, STAIRWAYS, RAMPS	ROOMS AND ENCLOSED SPACES
A-2	B	B	C
M	B	C	C
S-2	C	C	C

INTERIOR FLOOR FINISH

INTERIOR FLOOR COVERING MATERIALS TO COMPLY WITH DOC FF-1 PILL TEST (CPSC 16 CFR PART 1630), MUBC 804.4.1. NEW FLOOR FINISHES AND COVERINGS OF A TRADITIONAL TYPE, SUCH AS WOOD, VINYL, LINOLEUM, AND RESILIENT FLOOR COVERING MATERIAL NOT COMPOSED OF FIBERS ARE PERMITTED THROUGHOUT (MUBC 804.1 EXCEPTION).

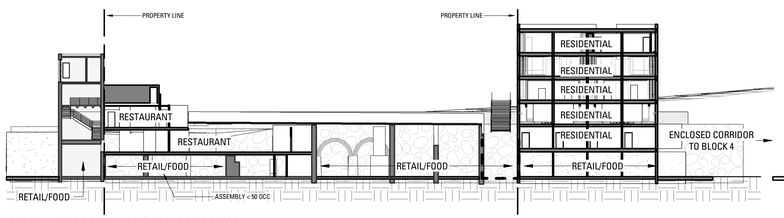

NARROW ALLEY USE SUMMARY



MARKET HALL USE SUMMARY

B - BLDG 6A - USE SUMMARY



B - BLDG 6B - USE SUMMARY

Bruner/Cott
ARCHITECTS
225 Friend St., Suite 701
Boston, MA 02114
617.492.8400
www.brunercott.com

Rev.	Date	Remarks

PORTLAND FORESIDE BLOCK 2

Date	OCTOBER 25, 2019
Scale	As indicated
Project Number	
Drawn By	Author

CODE KEY PLAN & SUMMARY

G-002

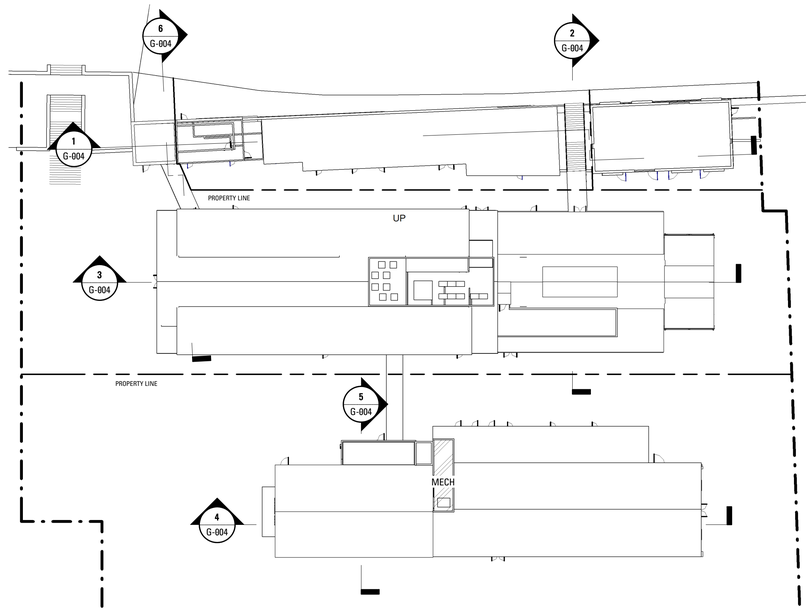

5 BLOCK 2 - ROOF LEVEL - OCCUPANCY PLAN
SCALE: 1/32" = 1'-0"

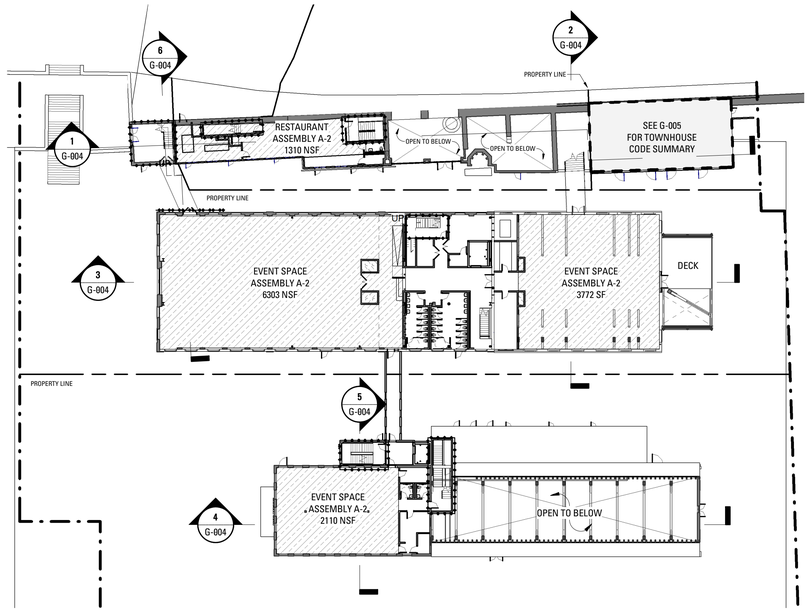

2 BLOCK 2 - SECOND LEVEL - OCCUPANCY PLAN
SCALE: 1/32" = 1'-0"

OCCUPANCY LEGEND

- ASSEMBLY, A-2
- BUSINESS, B
- ACCESSORY, MECHANICAL
- LOW-HAZARD STORAGE, S-2
- RESIDENTIAL, R-3

A BLDG 2, 3, 4, 24

	USE GROUP	FUNCTION	LOAD FACTOR	AREA	OCCUPANTS
GROUND LEVEL	ASSEMBLY A-2	ASSEMBLY UNCONC.	15 NET	11430 NSF	762
	BUSINESS B (ASSEMBLY <50)	ASSEMBLY CONC.	7 NET	300 NSF	42
SECOND LEVEL	ASSEMBLY A-2	ASSEMBLY UNCONC.	15 NET	10075 NSF	671
THIRD LEVEL	ASSEMBLY A-2	ASSEMBLY UNCONC.	15 NET	715 NSF	47
	BUSINESS B	OFFICE	100 GROSS	6500 GSF	65

B BLDG 6A, 6B

	USE GROUP	FUNCTION	LOAD FACTOR	AREA	OCCUPANTS
GROUND LEVEL	ASSEMBLY A-2	ASSEMBLY UNCONC.	15 NET	6110 NSF	407
	BUSINESS B	ASSEMBLY UNCONC.	15 NET	900 NSF	60
	MECHANICAL	MECHANICAL	300 GROSS	160 GSF	1
SECOND LEVEL	ASSEMBLY A-2	ASSEMBLY UNCONC.	15 NET	2110 NSF	140
THIRD LEVEL	BUSINESS B	OFFICE	100 GROSS	2130 GSF	21

C BLDG 14, 15, 16

	OCCUPANCY	FUNCTION	LOAD FACTOR	AREA	OCCUPANTS
GROUND LEVEL	ASSEMBLY A-2	ASSEMBLY UNCONC.	15 NET	1880 NSF	125
	BUSINESS B	ASSEMBLY UNCONC.	15 NET	1060 NSF	70
	MECHANICAL	MECHANICAL	300 GROSS	300 GSF	1
SECOND LEVEL	ASSEMBLY A-2	ASSEMBLY UNCONC.	15 NET	1310 NSF	87
THIRD LEVEL	ASSEMBLY A-2	ASSEMBLY UNCONC.	15 NET	570 NSF	38

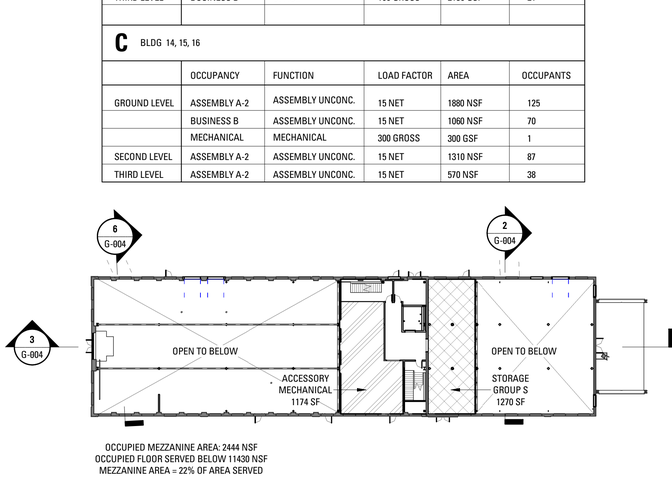

OCCUPIED MEZZANINE AREA: 2444 NSF
OCCUPIED FLOOR SERVED BELOW 11430 NSF
MEZZANINE AREA = 22% OF AREA SERVED

3 BLOCK 2 - A - BLDG 2/3 MEZZANINE - OCCUPANCY PLAN
SCALE: 1/32" = 1'-0"

4 BLOCK 2 - THIRD LEVEL - OCCUPANCY PLAN
SCALE: 1/32" = 1'-0"

1 BLOCK 2 - GROUND LEVEL - OCCUPANCY PLAN
SCALE: 1/32" = 1'-0"

Bruner/Cott
ARCHITECTS
225 Friend St., Suite 701
Boston, MA 02114
617.492.8400
www.brunercott.com

Rev.	Date	Remarks

PORTLAND FORESIDE BLOCK 2

Date	OCTOBER 25, 2019
Scale	As indicated
Project Number	
Drawn By	Author

CODE PLANS - BLOCK 2

G-003

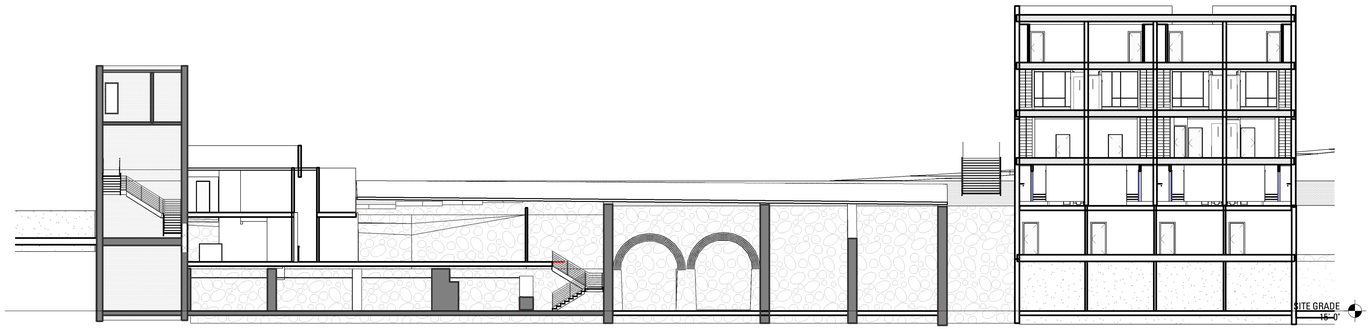

1 C - LONGITUDINAL CODE SECTION
SCALE: 1/16" = 1'-0"

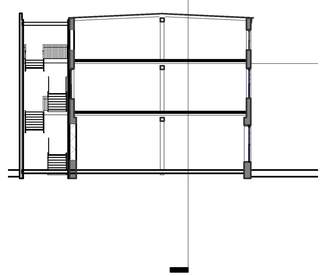

5 Section 9
SCALE: 1/16" = 1'-0"

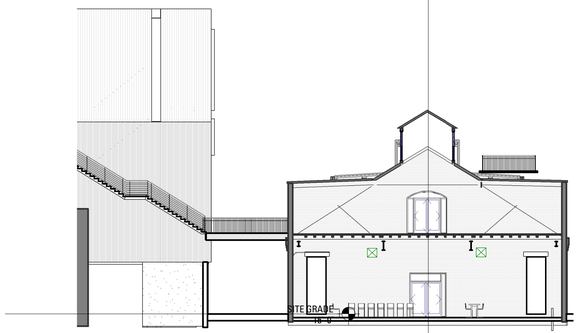

2 Section 5
SCALE: 1/16" = 1'-0"

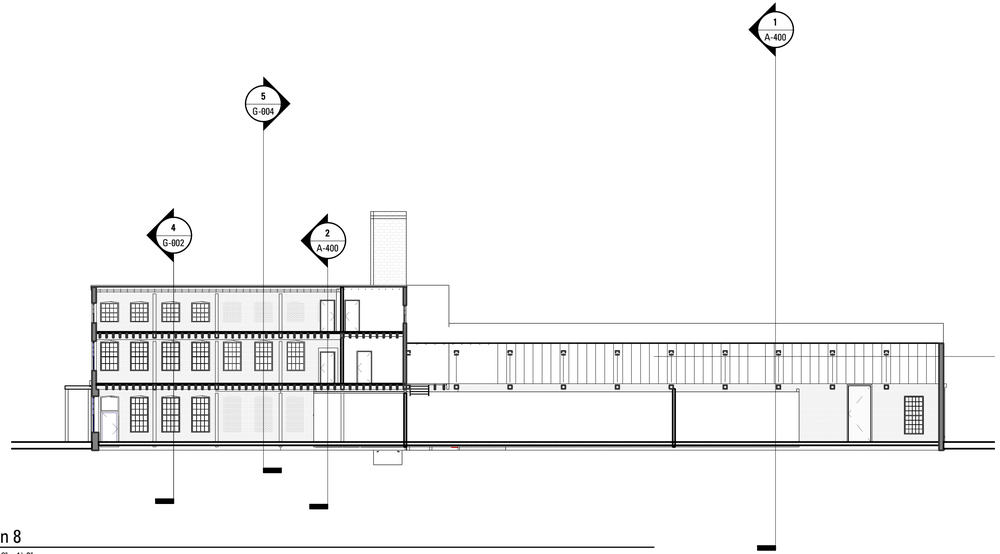

4 Section 8
SCALE: 1/16" = 1'-0"

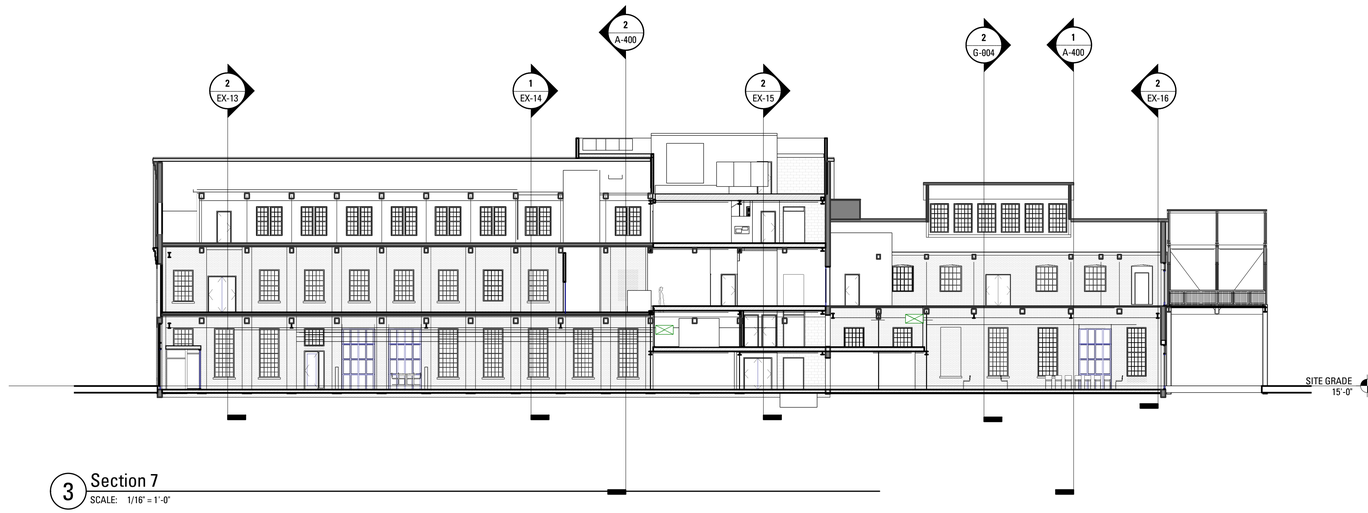

3 Section 7
SCALE: 1/16" = 1'-0"

6 Section 10
SCALE: 1/16" = 1'-0"

Bruner/Cott
ARCHITECTS
225 Friend St., Suite 701
Boston, MA 02114
617.492.8400
www.brunercott.com

Rev.	Date	Remarks

PORTLAND FORESIDE BLOCK 2

Date	OCTOBER 25, 2019
Scale	1/16" = 1'-0"
Project Number	
Drawn By	Author

BLOCK 2 CODE SECTIONS

G-004

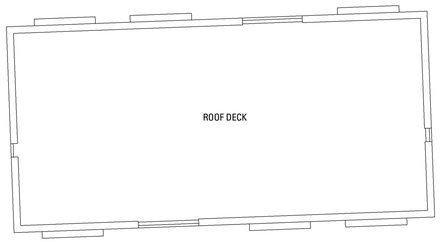

7 ROOF LEVEL
SCALE: 3/32" = 1'-0"

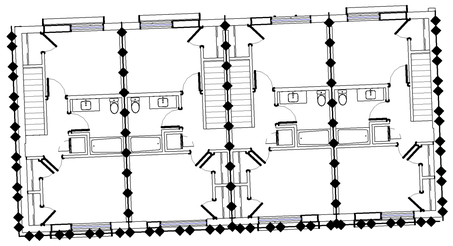

6 THIRD LEVEL
SCALE: 3/32" = 1'-0"

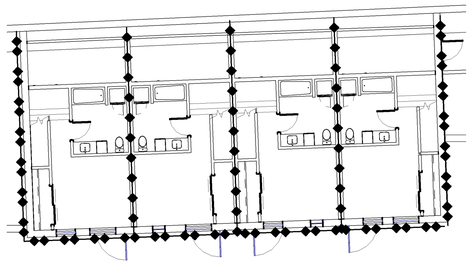

3 BASEMENT 1 LEVEL
SCALE: 3/32" = 1'-0"

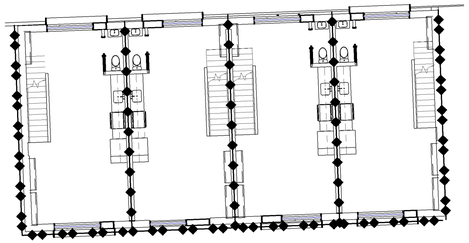

5 SECOND LEVEL
SCALE: 3/32" = 1'-0"

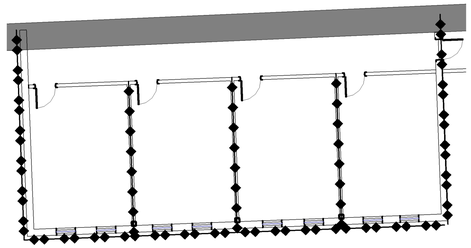

2 BASEMENT 2 LEVEL
SCALE: 3/32" = 1'-0"

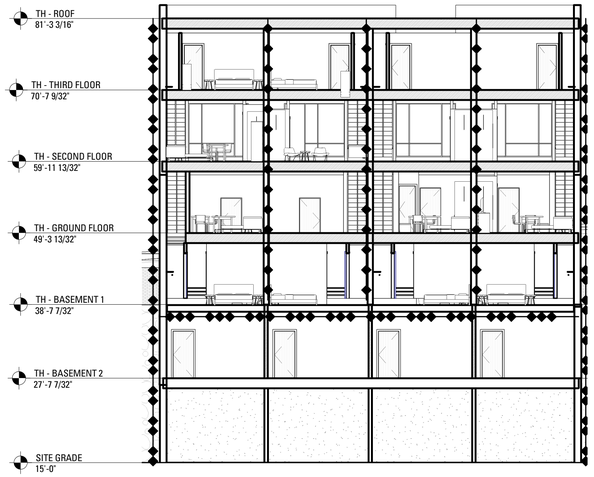

8 SECTION
SCALE: 3/32" = 1'-0"

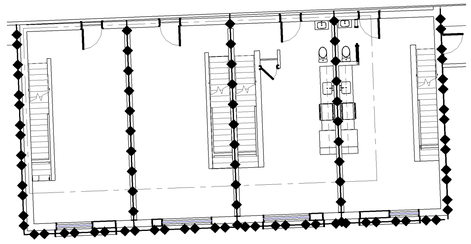

4 GROUND LEVEL
SCALE: 3/32" = 1'-0"

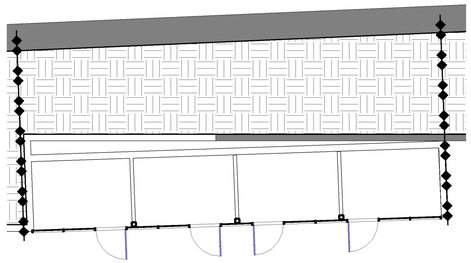

1 ALLEY LEVEL
SCALE: 3/32" = 1'-0"

PROJECT DATA

PROJECT LOCATION:	58 FORE STREET, PORTLAND, ME 04101 BLOCK 2 DEVELOPMENT
AUTHORITY HAVING JURISDICTION:	PERMITTING & INSPECTIONS DEPARTMENT, CITY OF PORTLAND MAINE OFFICE OF THE STATE FIRE MARSHAL
PROJECT DESCRIPTION:	RENOVATION OF COMPLEX OF HISTORIC BUILDINGS OF THE PORTLAND COMPANY. SEE PROJECT DESCRIPTIONS OF EACH BUILDING.

APPLICABLE CODES

BUILDING	MUBC – MAINE UNIFORM BUILDING CODE, AN AMENDED VERSION OF THE 2015 INTERNATIONAL BUILDING CODE (IBC). MUEBC – MAINE UNIFORM EXISTING BUILDING CODE, AN AMENDED VERSION OF THE 2015 INTERNATIONAL EXISTING BUILDING CODE. PORTLAND MUNICIPAL CODE CHAPTER 6
FIRE	PORTLAND MUNICIPAL CODE CHAPTER 10 NFPA 1, UNIFORM FIRE CODE, 2006 EDITION AS ADOPTED BY THE RULES OF THE STATE FIRE MARSHAL NFPA 1, UNIFORM FIRE CODE, 2015 EDITION AS ADOPTED BY THE MUBC NFPA 101, LIFE SAFETY CODE, 2009 EDITION AS ADOPTED AND AMENDED BY THE RULES OF THE STATE FIRE MARSHAL
PLUMBING	MAINE STATE PLUMBING CODE, AN AMENDED VERSION OF THE 2015 UNIFORM PLUMBING CODE (UPC)
MECHANICAL	2013 ASHRAE 62.1, VENTILATION FOR ACCEPTABLE INDOOR AIR QUALITY
ELECTRICAL	2014 NFPA 70, NATIONAL ELECTRIC CODE
ENERGY	MUBEC – MAINE UNIFORM BUILDING AND ENERGY CODE, AN AMENDED VERSION OF THE 2009 INTERNATIONAL ENERGY CONSERVATION CODE
ELEVATOR	MAINE ELEVATOR & TRAMWAY RULES & LAWS, AN AMENDED VERSION OF THE 2013 ASME A.17.1, SAFETY CODE FORE ELEVATORS AND ESCALATORS
ACCESSIBILITY:	2010 ADA STANDARDS FOR ACCESSIBLE DESIGN 2009 ICC A117.1, ACCESSIBLE AND USABLE BUILDINGS AND F FACILITIES
OTHER:	NATIONAL FIRE PROTECTION ASSOCIATION (NFPA) CODES AND STANDARDS, AS REFERENCED BY THE ABOVE CODES AND THE RULES OF THE STATE FIRE MARSHAL

GENERAL CODE SUMMARY

BLOCK 2, GROUP D, TOWNHOUSES

PROJECT DESCRIPTION:
NEW CONSTRUCTION OF A 6 STORY MIXED USE BUILDING CONTAINING ASSEMBLY AND RESIDENTIAL TOWNHOUSES.

USE & OCCUPANCY CLASSIFICATION:

CLASSIFICATION	FLOOR	USE
ASSEMBLY (GROUP A-2)	SITE GRADE	RESTAURANT
RESIDENTIAL (GROUP R-2)	BASEMENT 2 - THIRD FLOOR	APARTMENTS
STORAGE (GROUP S-2)	ALL FLOORS	MEP/BACK OF HOUSE

TYPE OF CONSTRUCTION

CONSTRUCTION TYPE	IA AND VA, I (332) AND V (111) BUILDING CONSISTS OF PODIUM CONSTRUCTION PER MUBC 510.2, REQUIRING TWO (2) FLOORS OF TYPE IA CONSTRUCTIONS WITH THE UPPER LEVELS CONSTRUCTED OF TYPE VA CONSTRUCTION.
FIRE PROTECTION	THE BUILDING WILL BE PROVIDED WITH A NEW SPRINKLER SYSTEM COMPLYING WITH NFPA 13. THE BUILDING WILL BE PROVIDED WITH A NEW FIRE ALARM SYSTEM COMPLYING WITH NFPA 72.
NUMBER OF STORIES	6 STORIES
BUILDING HEIGHT	66'-3 3/16" ABOVE GRADE (70' LIMIT FOR TYPE VA)

BUILDING ELEMENT FIRE RESISTANCE RATINGS CONSTRUCTION:

SHAFTS	2 HOUR
ELEVATOR MACHINE/ CONTROLS	2 HOUR
NON-SPRINKLERED ELECTRICAL ROOM	2 HOUR
EMERGENCY GENERATOR ROOM	2 HOUR
EMERGENCY ELECTRICAL ROOM	2 HOUR
DRY TYPE TRANSFORMER ROOM > 35,000 V	3 HOUR
DRY TYPE TRANSFORMER ROOM > 112.5 KVA	1 HOUR
HORIZONTAL EXIT	2 HOUR
BOILER ROOM WHERE LARGEST PIECE OF EQUIPMENT IS > 15 PSI AND 10 HP	SMOKE TIGHT
FURNACE ROOM WHERE ANY EQUIPMENT IS > 400,000 BTU PER HOUR INPUT	SMOKE TIGHT

MINIMUM INTERIOR WALL & CEILING FINISH REQ'S (PER ASTM E84 OR UL 723)

OCCUPANCY CLASSIFICATION	EXIT ENCLOSURES	CORRIDORS, EXIT ACCESS, STAIRWAYS, RAMPS	ROOMS AND ENCLOSED SPACES
A-2	B	B	C
R-2	C	C	C
S-2	C	C	C

INTERIOR FLOOR FINISH
INTERIOR FLOOR COVERING MATERIALS TO COMPLY WITH DOC FF-1 PILL TEST (CPSC 16 CFR PART 1630), MUBC 804.4.1. NEW FLOOR FINISHES AND COVERINGS OF A TRADITIONAL TYPE, SUCH AS WOOD, VINYL, LINOLEUM, AND RESILIENT FLOOR COVERING MATERIAL NOT COMPOSED OF FIBERS ARE PERMITTED THROUGHOUT (MUBC 804.1 EXCEPTION).

Bruner/Cott
ARCHITECTS
225 Friend St., Suite 701
Boston, MA 02114
617.492.8400
www.brunercott.com

Rev.	Date	Remarks

PORTLAND FORESIDE BLOCK 2

Date	OCTOBER 25, 2019
Scale	3/32" = 1'-0"
Project Number	
Drawn By	Author

CODE PLANS - TOWNHOUSES

G-005

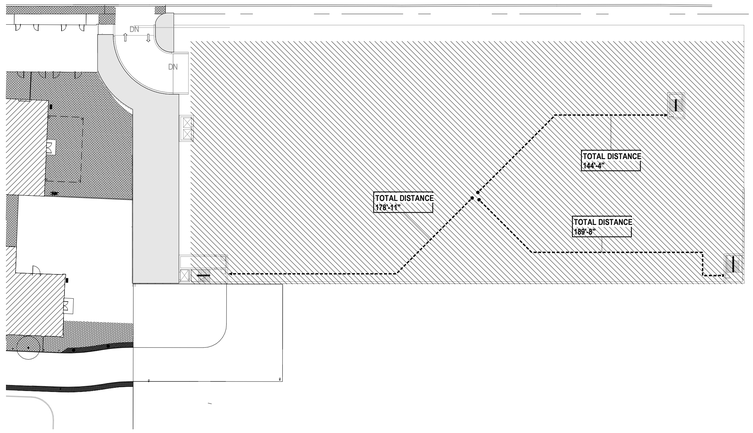

5 ROOF - ELEV. 59'-0": PHASE ONE
1" = 40'-0"

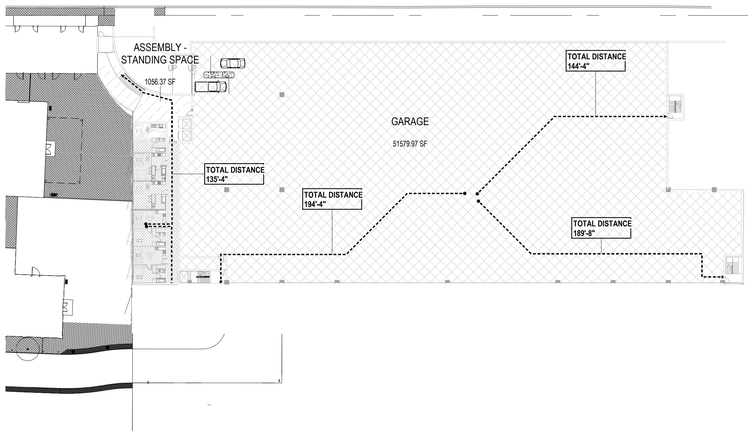

4 LEVEL 04 - PHASE I
1" = 40'-0"

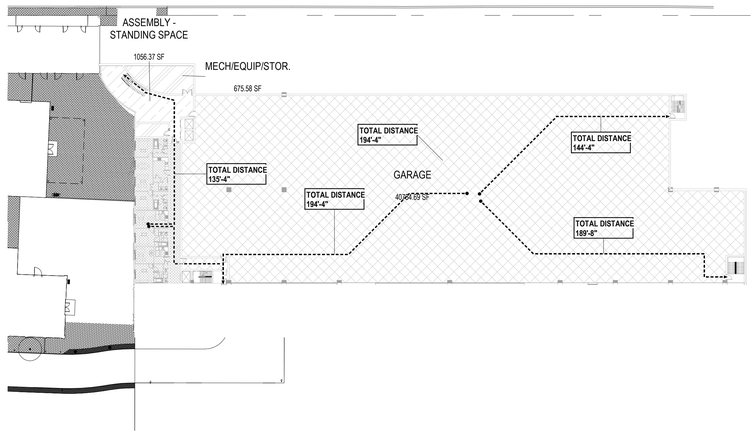

3 LEVEL 03 - PHASE I
1" = 40'-0"

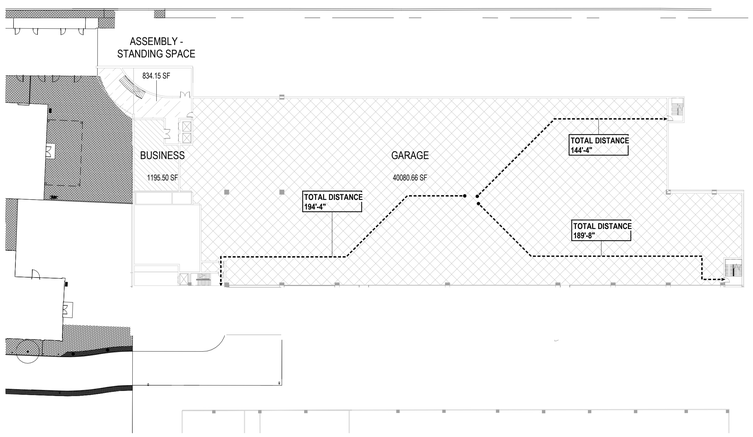

2 LEVEL 02 - PHASE I
1" = 40'-0"

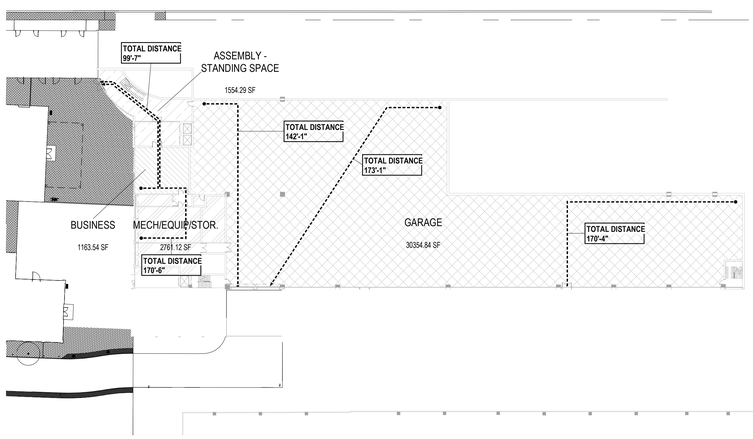

1 LEVEL 01 - GRADE LEVEL - PHASE I
1" = 40'-0"

PROJECT DATA & CODE REFERENCES

PROJECT LOCATION: 58 FORE ST, PORTLAND, ME 04101
AUTHORITY HAVING JURISDICTION: PERMITTING & INSPECTIONS DEPARTMENT, CITY OF PORTLAND
PROJECT DESCRIPTION: NEW GARAGE W/ RESIDENTIAL & RETAIL

APPLICABLE CODES:

BUILDING CODE:	2015 IBC, AS AMENDED BY MUBEC CHAPTER 6 + PORTLAND MUNICIPAL CODE CHAPTER 6
FIRE CODE:	NFPA 1 AND 101, AS AMENDED BY 25 M.R.S. §§ 2452 & 2465 + PORTLAND MUNICIPAL CODE CHAPTER 10
PLUMBING CODE:	2015 UPC, AS AMENDED BY 32 M.R.S. §3403-B
MECHANICAL CODE:	GUIDELINES, NOT MANDTORY: ASHRAE 62.1, ASHRAE 62.2, ASHRAE 90.1; E-1465-2008
ELECTRICAL CODE:	2017 NEC, AS AMENDED BY M.R.S. §3403-B.
ENERGY CODE:	2009 IECC, AS AMENDED BY MUBEC CHAPTER 6
ELEVATOR CODE:	MAINE ELEVATOR CODE, 32 M.R.S. §15206
ACCESSIBILITY:	MAINE HUMAN RIGHTS ACT, ADOPTED 5 M.R.S. CHAPTER 4 & 5 + 2010 ADA STANDARDS FOR ACCESSIBLE DESIGN
OTHER:	VARIOUS CODES AND STANDARDS FOR FUEL / OIL / PROPANE / GAS BURNING EQUIPMENT

GENERAL CODE SUMMARY

USES & OCCUPANCY CLASSIFICATION:

RESIDENTIAL (R-2)	UPPER LEVELS
BUSINESS GROUP (B)	LEVEL 1 RETAIL
LOW HAZARD STORAGE (S-2)	PARKING GARAGE, MEP ROOMS, BUILDING STORAGE

TYPE OF CONSTRUCTION: APARTMENTS
PHASE I

CONSTRUCTION TYPE	**IIIA**
FIRE PROTECTION	BUILDING IS FULLY SPRINKLERED
NUMBER OF STORIES	2 APARTMENT LEVELS AT OR BELOW GRADE
BUILDING HEIGHT	VARIES 53.5' MAX ABOVE GRADE (PER ZONING), 49' AVG HEIGHT
FLOOR AREAS	

(UNOCCUPIED)
TOTAL GSF

BUILDING ELEMENT FIRE RESISTANCE RATINGS	**CONSTRUCTION:**
SHAFTS	**2 HR (≥ 4 STORIES), 1 HR (< 4 STORIES)**
ELEVATOR MACHINE / CONTROLS ROOM	**2 HR**
NON-SPRINKLERED ELECTRICAL ROOM	**2 HR**
EMERGENCY GENERATOR ROOM	**2 HR FIRE BARRIER**
DRY TYPE TRANSFORMER ROOM > 35,000V	**3 HR**
DRY TYPE TRANSFORNER ROOM > 112.5 KVA	**1 HR**
BOILER ROOM WHERE LARGEST PIECE OF EQUIPMENT IS > 15 PSI AND 10 HP	**SMOKE TIGHT**
FURNACE ROOM ANY EQUIPMENT IS > 400,000 BTU PER HOUR INPUT	**SMOKE TIGHT**

TYPE OF CONSTRUCTION: GARAGE

CONSTRUCTION TYPE	**IB**
FIRE PROTECTION	BUILDING IS FULLY SPRINKLERED
NUMBER OF STORIES	5 LEVELS AT OR BELOW GRADE
BUILDING HEIGHT	VARIES:53.5' MAX ABOVE GRADE (PER ZONING), 49' AVG HEIGHT
FLOOR AREAS	

(UNOCCUPIED)
TOTAL GSF

BUILDING ELEMENT FIRE RESISTANCE RATINGS	**CONSTRUCTION:**
SHAFTS	**2 HR (≥ 4 STORIES), 1 HR (< 4 STORIES)**
ELEVATOR MACHINE / CONTROLS ROOM	**2 HR**
NON-SPRINKLERED ELECTRICAL ROOM	**2 HR**
EMERGENCY GENERATOR ROOM	**2 HR FIRE BARRIER**
DRY TYPE TRANSFORMER ROOM > 35,000V	**3 HR**
DRY TYPE TRANSFORNER ROOM > 112.5 KVA	**1 HR**
BOILER ROOM WHERE LARGEST PIECE OF EQUIPMENT IS > 15 PSI AND 10 HP	**SMOKE TIGHT**
FURNACE ROOM ANY EQUIPMENT IS > 400,000 BTU PER HOUR INPUT	**SMOKE TIGHT**

MINIMUM INTERIOR WALL & CEILING FINISH REQ'S (PER ASTM E84 OR UL 723)

OCCUPANCY CLASSIFICATION	EXIT ENCLOSURES	CORRIDORS, EXIT ACCESS, STAIRWAYS, RAMPS	ROOMS AND ENCLOSED SPACES
A	B	B	B
B	B	C	C
S	C	C	C

INTERIOR FLOOR FINISH: INTERIOR FLOOR COVERING MATERIALS TO COMPY W/ DOC.FF-1 PILL TEST (CPSC 16 CFR PART 1630), 780 CMR 804.4.1. NEW FLOOR FINISHES AND COVERINGS OF A TRADITIONAL TYPE, SUCH AS WOOD, VINYL, LINOLEUM, AND RESILIENT FLOOR COVERING MATERIALS NOT COMPOSED OF FIBERS ARE PERMITTED THROUGHOUT (780 CMR 804.1 EXCEPTION)

CODE COMPLIANCE PLAN LEGEND

- NEW PARTITION
- NON-RATED SMOKE PARTITION
- 1 HR FIRE BARRIER PARTITION
- 2 HR FIRE BARRIER PARTITION
- FIRE EXTINGUISHER
- 50'-0" — TRAVEL DISTANCE - LONGEST ROUTE TO AN EXIT
- EXIT — EXIT LOCATION
- MHO — MAGNETIC HOLD OPEN

DOOR
7" CLR — ACTUAL CLEAR WIDTH PROVIDED
7" / OCC — EXIT WIDTH FACTOR
? OCC — MAX OCCUPANT LOAD SUPPORTED
? OCC — ACTUAL OCCUPANT LOAD

?
? CLR — ACTUAL STAIR WIDTH PROVIDED
? / OCC — STAIR WIDTH FACTOR
? OCC — MAX OCCUPANT LOAD SUPPORTED
? OCC — ACTUAL OCCUPANT LOAD

USE LEGEND

- A-2, ASSEMBLY
- B, BUSINESS
- M, MERCANTILE
- S-1
- S-2, LOW HAZARD STORAGE

Perkins&Will
225 Franklin Street, Suite 1100
Boston, MA 02110
t 617.478.0300
f 617.478.0321
www.perkinswill.com

CONSULTANTS

STRUCTURAL ENGINEER
Thornton Tomasetti / Becker Structural Engineers
75 York St
Portland, ME 04101
t 207.879.1838
f 207.879.1822

MEP ENGINEER
Rist-Frost-Shumway Engineering
50 Milk St
Boston, MA 02110
t 617.494.1464

OWNER'S CONSULTANTS

CIVIL ENGINEER
Woodard & Curran
51 Hutchins Dr
Portland, ME 04102
t 207.774.2112

LANDSCAPE ARCHITECT
Michael Boucher Landscape Architecture
457 US Route 1, Suite 2
Freeport, ME 04032
t 207.865.1080
f 207.865.1455

GENERAL CONSTRACTOR
Consigli
15 Franklin St
Portlan, ME 04101
t 207.773.3000

PROJECT

BLOCK FOUR

FORESIDE
PORTLAND, MAINE

PORTLAND FORESIDE DEVELOPMENT COMPANY
254 COMMERCIAL ST SUITE 118
PORTLAND, ME 04101

KEYPLAN

ISSUE CHART

MARK	ISSUE	DATE

100% SCHEMATIC DESIGN 11/08/2019

Job Number	157031.001
Drawn	Author
Checked	Checker
Approved	Approver

TITLE

PHASE I CODE COMPLIANCE DIAGRAMS

SHEET NUMBER

G00-01

Copyright © 2016 Perkins+Will

11/11/2019 6:54:49 PM C:\Temp\58 FORE ST MASTERPLAN_Block Four_v2019_MrietaMonteiro.rvt

PORTLAND FORESIDE DEVELOPMENT – PHASE 1

Site Location of Development

41 Hutchins Drive
Portland, ME 04102
800-426-4262

woodardcurran.com
COMMITMENT & INTEGRITY DRIVE RESULTS

0227007.16
Portland Foreside Development Co.
November 2019

TABLE OF CONTENTS

SECTION		PAGE NO.
1.	**DEVELOPMENT DESCRIPTION**	**1-1**
1.1	Objectives & Details	1-1
1.2	Existing Facilities	1-3
1.3	Topographic Map	1-4
1.4	Construction Plan	1-4
1.5	Drawings	1-4
1.6	List of Attachments	1-4
2.	**TITLE, RIGHT, OR INTEREST**	**2-1**
2.1	List of Attachments	2-1
3.	**FINANCIAL CAPACITY**	**3-1**
3.1	Financing	3-1
3.2	Certificate of Good Standing	3-1
3.3	List of Attachments	3-1
4.	**TECHNICAL ABILITY**	**4-1**
5.	**NOISE**	**5-1**
6.	**VISUAL QUALITY & SCENIC CHARACTER**	**6-1**
7.	**WILDLIFE & FISHERIES**	**7-1**
7.1	List of Attachments	7-1
8.	**HISTORIC SITES**	**8-1**
8.1	List of Attachments	8-1
9.	**UNUSUAL NATURAL AREAS**	**9-1**
9.1	List of Attachments	9-1
10.	**BUFFERS**	**10-1**
11.	**SOILS**	**11-1**
11.1	List of Attachments	11-1
12.	**STORMWATER MANAGEMENT**	**12-1**
12.1	List of Attachments	12-1
13.	**URBAN IMPAIRED STREAM**	**13-1**
14.	**BASIC STANDARD**	**14-1**
14.1	List of Attachments	14-1
15.	**GROUNDWATER**	**15-1**
16.	**WATER SUPPLY**	**16-1**
17.	**WASTEWATER DISPOSAL**	**17-2**

17.1 List of Attachments 17-2
18. SOLID WASTE 18-1
18.1 Solid Waste 18-1
18.2 Construction & Demolition Debris 18-1
18.3 Special & Hazardous Waste 18-1
19. FLOODING 19-1
19.1 List of Attachments 19-1
20. BLASTING 20-1
21. AIR EMISSIONS 21-1
22. ODORS 22-1
23. WATER VAPOR 23-1
24. SUNLIGHT 24-1
25. NOTICES 25-1

1. DEVELOPMENT DESCRIPTION

This narrative report is in support of a Site Location of Development (SLOD) Permit Application for Phase 1 of the Portland Foreside Development located at 58 Fore Street in Portland, Maine. A portion of this development was initiated prior to obtaining a SLOD Permit; the Maine Department of Environmental Protection (MaineDEP) provided a Site Law Determination for the proposed development via a letter dated August 12, 2019, in response to the letter submitted by Woodard & Curran on September 16, 2016. Work completed prior to obtaining a SLOD permit consists of building demolition as well as utilities and temporary site improvements associated with the adjacent marina; stormwater management measures and final site conditions for the marina are included as part of the applications for Phase 1 of the Portland Foreside Development.

In accordance with Title 38, Chapter 3, Subchapter 1, Article 6 of the Maine Statutes, it is our understanding that demolition of buildings is considered exempt from Site Law. It is also our understanding that the MaineDEP has determined that the City of Portland has delegated review authority over this project.

1.1 OBJECTIVES & DETAILS

The proposed development is the first phase of the 58 Fore Street Master Development Plan, approved by the City of Portland Planning Board (Project ID: 2016-224) on December 22, 2016, to redevelop and revitalize the 10-acre former Portland Company complex into a mixed-use development.

The redevelopment of 58 Fore Street into a mixed-use neighborhood highlights the historical significance of the area, access to the waterfront and provides a direct connection from the adjacent neighborhoods to the waterfront. The result is a vibrant revitalization of the City's eastern waterfront. The Phase 1 development program for the project was considered and designed around the overall vision of creating this mixed-use neighborhood and proposes commercial, residential, office, retail, restaurant, marina and public open space uses which are consistent with the Master Development Plan for the site. Open space proposed for Phase 1 includes plazas for pedestrian use between the individual building components as well as a public access easement, view corridors and access to the waterfront via a walkway along the water's edge.

The 58 Fore Street Master Development Plan consists of six "blocks" of development as shown by the below figure:

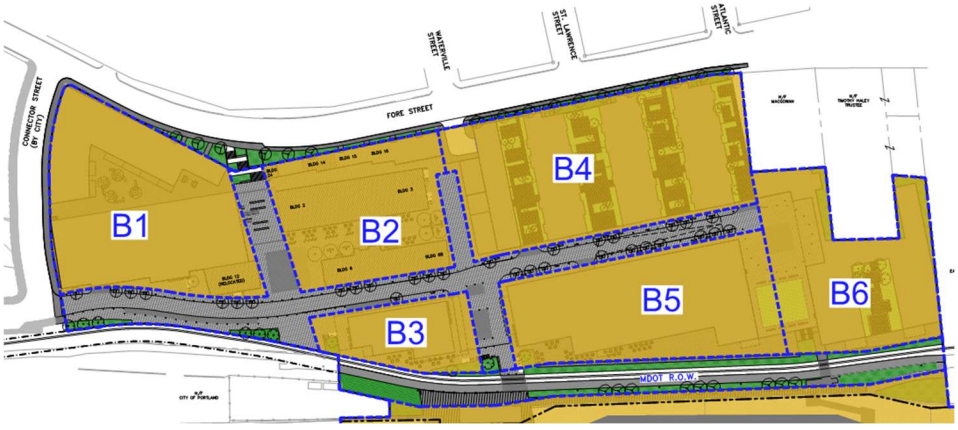

Phase 1 of the development includes the following work:

- Block 1:

Block 1 marks a prominent entry point to the 58 Fore Street property from Thames Street for vehicles and pedestrians. Visitors are introduced to the revitalized area by the strong visual prominence of reconstructed historical Building 12 as they walk alongside ground-level retail associated with a new office building. Other points of entry are along the realigned Eastern Promenade Trail, which will have a closer connection to the waterfront, and through the public access easement which resides over an entry stair with adjacent public view vantage points that provides pedestrian access on the east side of Block 1 to the core of the abutting historic district.

Parcel 1A is the construction of a Class A office building with round floor retail on the south side and a single deck of parking. Parcel 1C highlights the reconstruction of Building 12 which was meticulously catalogued and disassembled with approval from Historic Preservation Board and will be rebuilt in the more prominent location detailed in the site plan with uses that include a fine dining restaurant, office space, and two residential units.

- Block 2:

  Block 2 is the Historic Core of the redevelopment project which highlights the adaptive reuse of 7 historic buildings from the former Portland Company complex. Along with the historic buildings, this block brings to life two alleys and two plazas that will serve pedestrians as they move throughout the site. The reuse of these 7 historic buildings for a market hall and ground floor retail will invigorate the neighborhood and provide a strong sense of place rooted in the masonry style and form of Portland's industrial past. Upper floors will be utilized primarily for event space, preserving the historic industrial character of the space, a visual element that patrons have enjoyed during many events that were hosted at this location in the recent past. A portion of the upper floors will also be utilized as office space. New residential townhomes along Fore Street will complement the retail, commercial and office uses. The redeveloped historic core reveals itself to pedestrians and vehicles by emphasizing openness and flexibility. Considerations for public access include a new staircase providing access from Fore Street to plaza spaces within the site that continue all the way down to the waterfront.

  Parcels 2A, 2B and 2C are all associated with the renovation of the site's historic core buildings (Building 2, Building 3, Building 4, Building 6A, Building 6B, Building 24, Building 14, Building 15 and Building 16) into restaurant, office, residential and event space, along with a market hall that will showcase local food/beverage vendors, chefs, and culinary focused entrepreneurs.

- Block 3:

  In order to create a complete, functional site at the completion of Phase 1, Block 3 will be paved to provide temporary access to the adjacent Fore Points Marina. Block 3 will be developed as part of future phases of the project; permit applications for this future development will be submitted under separate cover at a future date. The future development of Block 3 will be served by the infrastructure constructed as part of Phase 1, as described further throughout this Report.

- Block 4:

  Block 4 provides the initial levels of common, structured parking that will serve all uses associated with each development block at 58 Fore Street. Residential units and retail space along the western side of the garage are proposed during Phase 1 for Block 4. The structured parking built during Phase 1 will form the foundation for the future buildout of residential (above) and ground floor retail (south elevation) during Phase 2, along with an expansion of the parking in that future phase. Block 4 will provide the entire development with centralized parking to support the full buildout. Parcel 4 is the construction of 5 levels of the parking garage with residential units, storage and retail on the west elevation. Blocks 5 & 6:

No new development is proposed within Blocks 5 or 6 at this time. However, minor site improvements such as grading and utility installations will be required in this area in order to support the Phase 1 work. These blocks will be developed as part of future phases of the project; permit applications for this future development will be submitted under separate cover at a future date.

- Shared Space:

  In addition to the block development described above, shared street infrastructure and utilities will be installed throughout the site to support the proposed development. The Phase 1 work will also include the relocation of the Maine Narrow Gauge Railroad and the Eastern Promenade Trail as well as access improvements on property owned by the MaineDOT and City of Portland.

The Phase 1 area of disturbance is approximately 7.88-acres and will include approximately 6.7-acres of impervious area. The proposed development is a critical piece to Portland's future for a number of reasons including:

- The overall Project Site is large (+/- 10 acres) and strategically located between Portland's vibrant downtown, its working waterfront, and the beginning of its Eastern Promenade residential neighborhoods. Phase I will begin the connection of an underutilized part of the City to adjacent neighborhoods, the waterfront and the Old Port.

- The Project Site represents a keystone piece in the City's continuing efforts to link its vibrant downtown to the vast potential of its commercial waterfront. Phase 1 will help the City further realize the benefits of its investments in the Ocean Gateway marine terminal facility and related infrastructure;

- The development will help stimulate other investments in the eastern waterfront with the anticipation that investment in the Project Site will result in investment in underdeveloped public and private lands situated between the India Street neighborhood and the Project Site;

- As a whole, this proposed development presents an unparalleled opportunity to grow the City's tax base, add housing, and create jobs; and

- The development can act as a catalyst for change in this area, improve the quality of life for all Portland residents by facilitating access to the waterfront, adding capacity for events that draw residents and visitors and enable the City's cruise ship terminal to live up to its name as a truly memorable gateway.

In addition to the SLOD permit, the proposed work requires the following permits:

- City of Portland Level III Site Plan & Subdivision;
- City of Portland Flood Hazard Development Permits;
- City of Portland Historic Preservation Application for Certificate of Appropriateness;
- MaineDEP Natural Resources Protection Act Permit-by-Rule;
- Maine Construction General Permit Notice of Intent; and
- FAA Notice of Proposed Construction.

1.2 EXISTING FACILITIES

The proposed development will be located on a portion of an approximately 10-acre property previously developed as the Portland Company Complex, the Maine Narrow Gauge Railroad, Eastern Promenade Trail, and the Fore Points Marina. Existing site conditions consist primarily of impervious paved and gravel areas, with some areas of sparse vegetation. The Site is adjacent to the Fore River. There are no significant natural features or wetlands on-site. A survey of the Site was completed by Owen Haskell, Inc. on February 26, 2019.

The former Portland Company Complex contained various industrial uses and many of the existing buildings have been demolished. The Site previously served as a pre-Civil War locomotive manufacturing site and components of that past still stand today. Historically significant facades include the Portland Company Vault, the Machine Shop, The Pattern Storehouse, and the Blacksmith Shop. The development team has included these historic facades, along with the character and linear orientation of the alleyways between, in the redevelopment planning for the site.

1.3 TOPOGRAPHIC MAP

A USGS topographic map showing the approximate location of proposed development is attached to this Section for your reference. The proposed development is located within the Portland East Quadrangle.

1.4 CONSTRUCTION PLAN

The proposed development will be constructed in phases. Construction of Phase 1 is anticipated to begin in April of 2020. Erosion and sediment control measures will be installed prior to any ground disturbing activities, as described in Section 14 of this Report. The Contractor will be required to provide a construction management plan for the project, subject to the review and approval of the City and Engineer.

The Site will be managed during construction to minimize impacts to the adjacent land uses. Maintaining access to adjacent properties and public facilities will be a priority. Traffic impacts to adjacent roadways, including Thames Street Extension, Fore Connector, and Fore Street, will be minimized during construction to the greatest extent possible. Traffic controls will consist of temporary signage and barriers where necessary to manage vehicle, pedestrian, and bicycle traffic and direct it safely around the construction area. Work affecting traffic circulation such as underground utility work and grading activities will be conducted during periods of low traffic to reduce potential impacts.

Below is the anticipated sequence of construction activities for major aspects of the development:

- Installation of erosion and sediment control measures and traffic control measures;
- Demolition and site preparation activities;
- Construction of utilities, stormwater management system, and the roadway;
- Construction of buildings;
- Installation of landscaping and final surface materials; and
- Removal of erosion and sediment control measures.

1.5 DRAWINGS

Design drawings showing the proposed development are attached to this Section.

1.6 LIST OF ATTACHMENTS

The following documents are attached to this Section:

- Topographic Map; and
- Design Drawings (Bound Separately).

2. TITLE, RIGHT, OR INTEREST

The proposed development is located on properties owned by the Applicant and identified as Tax Map 18, Lots A001 and A002. Additionally, the Applicant has obtained easements for work that will occur on the adjacent Narrow Gauge Railroad property owned by the Maine Department of Transportation (Tax Map 18, Lot A013). Attached are copies of the deeds and easements associated with these properties.

2.1 LIST OF ATTACHMENTS

- Deeds; and
- Easements.

TRUSTEES' DEED

Maine Statutory Short Form

KNOW ALL BY THESE PRESENTS THAT **ELIZABETH M. SPRAGUE, ERIC THOMAS SPRAGUE and PHINEAS M. SPRAGUE, as Trustees of THE BUENA VISTA TRUST**, under indenture dated December 20, 2011, with a principal place of business in Cape Elizabeth, Maine, by the power conferred by law, and every other power, for consideration paid, grant to **CPB2 LLC**, a Delaware limited liability company, with a place of business c/o Blue Water Construction, 41 Glendale Place, Gilford, New Hampshire 03249, the land, together with any improvements thereon, situated in the City of Portland, County of Cumberland, State of Maine, described on Exhibit A attached hereto.

MAINE REAL ESTATE TAX PAID

Pursuant to Title 18-B M.R.S. § 1013, we, in our capacities, do hereby certify that (1) we are all of the Trustees of said Trust; (2) the Trust exists as the date of this Agreement; (3) we have power under said Trust to convey any trust asset in our sole discretion and need no consent from any beneficial interests; (4) we are the trustees authorized to execute or otherwise authenticate any and all documents in the exercise of our power; (5) in making this conveyance, we have in all respects acted in pursuance of the authority granted in and by said Trust; and (6) the Trust has not been revoked, modified, amended or terminated in any way that would cause the representations contained in this certificate to be incorrect.

[signatures on next page]

Witness our hands and seals this 19 day of the month of July, 2013.

WITNESS:

THE BUENA VISTA TRUST

_____

By_____
Eric Thomas Sprague, Trustee

_____

By_____
Elizabeth M. Sprague, Trustee

_____

By_____
Phineas M. Sprague, Trustee

STATE OF MAINE
COUNTY OF CUMBERLAND

July __, 2013

Then personally appeared the above named Eric Thomas Sprague, in his said capacity and acknowledged the foregoing instrument to be his free act and deed.

Before me,

_____
Notary Public/Attorney at Law

Witness our hands and seals this 26 day of the month of July, 2013.

WITNESS:

THE BUENA VISTA TRUST

By _____
Eric Thomas Sprague, Trustee

By _____
Elizabeth M. Sprague, Trustee

By _____
Phineas M. Sprague, Trustee

STATE OF MAINE
COUNTY OF CUMBERLAND

July 26, 2013

Then personally appeared the above named Eric Thomas Sprague, in his said capacity and acknowledged the foregoing instrument to be his free act and deed.

Before me,

~~Notary Public~~/Attorney at Law
Drew A. Ardelean

EXHIBIT A

A certain lot or parcel of land together with the buildings thereon situated on the southerly side of Fore Street in the City of Portland, County of Cumberland and State of Maine bounded and described as follows:

Beginning at a point on the southerly sideline of Fore Street at the northeasterly corner of Tract I as shown on "ALTA/ACSM Land Title Survey 58 Fore Street, Portland, Cumberland County, Maine made for CPB2 LLC" dated May 22, 2013 by Owen Haskell, Inc., thence N53°19'30"E along the southerly sideline of said Fore Street 140.00 feet;

Thence, N 61° 01' 30" E along the southerly sideline of said Fore Street 43.36 feet to land now or formerly of Macgowan as described in the Deed recorded in Cumberland County Registry of Deeds in Book 15773, Page 153;

Thence, S 31° 18' 30" E along land of said Macgowan 150.00 feet;

Thence, N 61° 01' 30" E along land of said Macgowan 112.00 feet to land now or formerly of Timothy Haley, Trustee, as described in the Deed recorded in the said Registry of Deeds in Book 24759, Pages 67 & 69;

Thence, S 31° 18' 30" E along land of said Haley 110.28 feet;

Thence, N 63° 18' 30" E along land of said Haley 100.00 feet;

Thence, N 31° 18' 30" W along land of said Haley 95.88 feet;

Thence, N 69° 31' 20" E along land of said Haley 49.73 feet to land now or formerly of Eastern Promenade Condominium;

Thence, S 31° 18' 26" E along land of said Eastern Promenade Condominium 240.48 feet to an iron rod found and to land now or formerly of the State of Maine as described in the Deed recorded in said Registry of Deeds in Book 10924, Page 91;

Thence, S 63° 18' 30" W along land of said State of Maine 430.00 feet to the easterly line of said Tract I;

Thence, N 33° 29 '33" W along said Tract I 381.17 feet to the point of beginning containing 2.87 acres.

The premises are conveyed together with the right of access and egress running from the existing paved driveway over land now or formerly of The Portland Company to the

premises conveyed herein as described in a deed to Elizabeth M. Sprague, Eric Thomas Sprague and Phineas M. Sprague, Trustees of The Buena Vista Trust by Warranty deed of The Portland Company dated December 30, 1012 and recorded in the Cumberland County Registry of Deeds in Book 30265, Page 32.

Meaning and intending to convey and hereby conveying the same premises conveyed to Elizabeth M. Sprague, Eric Thomas Sprague and Phineas M. Sprague, Trustees of The Buena Vista Trust by Warranty Deed of The Portland Company, dated December 30, 2012 and recorded in the Cumberland County Registry of Deeds in Book 30265, Page 32.

S:\P\POCO14\Prentice Purchase\Sale Documents\Deed of Trustees.doc

Received
Recorded Register of Deeds
Jul 29,2013 03:54:21P
Cumberland County
Pamela E. Lovley

Doc#: 13675 Bk:31425 Pg: 267

QUITCLAIM DEED WITH COVENANT

Maine Statutory Short Form

KNOW ALL BY THESE PRESENTS, that **THE PORTLAND COMPANY**, a Maine corporation and having a place of business at 58 Fore Street, County of Cumberland, and State of Maine, for consideration paid, grants to **CPB2 LLC**, a Delaware limited liability company, with an address of P.O. Box 7987, Portland, Maine 04112, with **QUITCLAIM COVENANTS,** the land located in Portland, County of Cumberland and State of Maine, and more particularly described in Exhibit "A" attached hereto and made a part hereof.

MAINE REAL ESTATE TAX PAID

IN WITNESS WHEREOF, said THE PORTLAND COMPANY has caused this instrument to be signed and sealed this 1st day of April, 2014.

WITNESS:

THE PORTLAND COMPANY

Phineas Sprague Jr

By: Phineas Sprague, Jr.
Its: President

STATE OF MAINE
COUNTY OF CUMBERLAND

April 1, 2014

Personally appeared the above-named Phineas Sprague, Jr. in his said capacity, and acknowledged the foregoing to be his free act and deed and that of said corporation, The Portland Company, before me.

~~Notary Public~~/Attorney at Law

Drew A. Anderson

Printed Name

EXHIBIT A

TRACT I

A certain lot or parcel of land together with the buildings thereon situated on the southerly side of Fore Street, City of Portland, County of Cumberland and State of Maine bounded and described as follows:

Beginning at a point on the southerly sideline of Fore Street at a railroad spike at the northeasterly corner of land now or formerly of Hope 1 LLC as described in deed Book 22261, Page 50, thence S 87° 34' 45" E along the southerly sideline of said Fore Street 287.74 feet;

Thence, N 53° 19' 30" E along the southerly sideline of said Fore Street 594.45 feet to the northwesterly corner of Tract III, as shown on "ALTA/ACSM Land Title Survey, 58 Fore Street, Portland, Cumberland County, Maine made for CPB2 LLC" by Owen Haskell, Inc. dated May 22, 2013.

Thence, S 33° 29' 33" E along the westerly side of said Tract III 381.17 feet to land now or formerly of the State of Maine as described in deed Book 10924, Page 91;

Thence, S 63° 18' 30" W along land of said State of Maine 255.00 feet;

Thence, S 68° 31' 30" W along land of said State of Maine 442.91 feet to an iron rod found (bent) and land now or formerly of City of Portland as described in deed Book 21951, Page 341;

Thence, N 88° 12' 30" W along land of said City of Portland 137.25 feet to a non-tangent curve to the right;

Thence, following the curve to the right, along land of said City of Portland and land of said Hope 1 LLC, having a radius of 274.33 feet, an arc length of 337.36 feet, a chord bearing of N 38° 35' 30" W, and a chord length of 316.50 feet, to the southerly sideline of Fore Street and the point of beginning containing 6.04 acres.

Basis of bearings: Magnetic 1967.

TRACT II

A certain lot or parcel of land together with the buildings thereon situated southerly of but not adjacent to Fore Street, in the City of Portland, County of Cumberland and State of Maine bounded and described as follows:

Commencing at a point on the southerly line of Tract I, at an iron rod found (bent) at the southeasterly corner of land now or formerly of the City of Portland as described in deed Book 21951, Page 341, on the northerly line of land now or formerly of the State of Maine as described in deed Book 10924, Page 91, as shown on "ALTA/ACSM Land Title Survey, 58 Fore Street, Portland, Cumberland County, Maine made for CPB2 LLC" by Owen Haskell, Inc. dated May 22, 2013.

Thence, N 68° 31' 30" E along the northerly line of land of said State of Maine 215.11 feet;

Thence, S 27° 09' 40" E across land of said State of Maine and along the easterly line of land now or formerly of the City of Portland 50.25 feet to the true point of beginning;

Thence, N 68° 31' 30" E along the southerly sideline of land of said State of Maine 225.10 feet;

Thence, N 63° 18' 30" E along the southerly sideline of land of said State of Maine 690.74 feet;

Thence, S 30° 39' 00" E along land of said State of Maine 56.34 feet;

Thence, S 61° 35' 30" W 27.46 feet;

Thence, S 77° 24' 52" W 94.07 feet;

Thence, S 62° 35' 30" W 475.00 feet;

Thence, S 38° 50' 30" W 60.00 feet;

Thence, S 63° 50' 30" W 120.00 feet;

Thence, N 26° 10' 00" W 8.00 feet;

Thence, S 63° 49' 37" W 150.00 feet to land of said City of Portland;

Thence, N 27° 09' 40" W along land of said City of Portland 74.89 feet to the point of beginning containing 44,274 sq. ft.

Basis of bearings: Magnetic 1967.

ALSO CONVEYING two crossings for vehicular, pedestrian and utility access to and from other land now or formerly of Phineas Sprague to the most immediately above described parcel across the area shown on Exhibit B of Indenture Deed by and between the Maine Department of Transportation and Phineas Sprague, dated August 30, 1993 and recorded in Book 10924, Page 97, as the "Rail-Trail Corridor." Each crossing shall be 50 feet in width over the 50 foot wide "Rail-Trail Corridor" plus turning radii, as necessary, at the entrances to the crossings from the above described parcel of land. Such crossings may be moved from time to time by the Grantee at its expense upon proper notice to and approval by the Maine Department of Transportation, provided that the distance between the centerlines of the two crossings shall never be less than 200 feet; and further provided that in the event of any relocation, any former crossing shall be restored to the condition it would have been in had the crossing not been placed in that location.

TOGETHER WITH any upland including the seawall which immediately adjoin the above described premises.

Received
Recorded Register of Deeds
Apr 03,2014 12:25:29P
Cumberland County
Pamela E. Lovley

QUITCLAIM DEED WITHOUT COVENANT

CITY OF PORTLAND, a body corporate and politic and Maine municipal corporation ("Grantor"), FOR CONSIDERATION PAID, releases to **CPB2 I LLC**, a Delaware limited liability company with a mailing address of Merrill's Wharf, 254 Commercial Street, Suite 118, Portland, Maine 04101 ("Grantee"), certain real property, together with any improvements thereon, located southerly of Fore Street, in the City of Portland, County of Cumberland and State of Maine (the "Premises"), more particularly described on Exhibit A attached hereto and made a part hereof.

MAINE REAL ESTATE TAX PAID

Grantee covenants and agrees by acceptance of this Deed that the Premises herein conveyed is subject to the Declaration of Covenants and Option to Repurchase the Premises set forth in Exhibit B attached hereto and hereby made a part hereof.

IN WITNESS WHEREOF, Grantor has caused this instrument to be executed on its behalf by Jon P. Jennings, its City Manager, duly authorized, on this 2 day of November, 2018.

WITNESS:

CITY OF PORTLAND

Jon P. Jennings
Its City Manager

STATE OF MAINE
COUNTY OF CUMBERLAND

November 2, 2018

Personally appeared the above-named Jon P. Jennings, City Manager of the City of Portland, as aforesaid, and acknowledged the foregoing to be his free act and deed in his said capacity, and the free act and deed of said City of Portland.

Before me,

Attorney-at-Law/~~Notary Public~~
Commission Expires:
Print Name: Michael Goldman Bar No. 9842

EXHIBIT A

A certain lot or parcel of land situated southerly of but not adjacent to Fore Street in the City of Portland, County of Cumberland and State of Maine bounded and described as follows:

Beginning at a point on the southerly line of land of CPB2 at the southeasterly corner of land now or formerly of 100 Fore Street LLC as described in deed book 33748, page 1;

Thence, southeasterly along the southerly line of land of said CPB2 along a curve to the left having a radius of 274.33 feet, an arc length of 86.71, chord bearing of S 80°30'39" E and chord length of 86.35;

Thence, N 76°02'49" E along the southerly line of said CPB2 a distance of 137.25 feet to land of the State of Maine;

Thence, S 57°47'32" W across land of said City of Portland 11.22 feet to a point of curvature;

Thence, southwesterly across land of said City of Portland along a curve to the left, having a radius of 466.50 feet an arc length of 133.12 feet chord bearing of S 49°37'02" W and chord length of 132.67 feet;

Thence, S 41°26'32" W across land of the City of Portland 17.92 feet;

Thence, S 46°01'18" W along land of the State of Maine 31.95 feet;

Thence, N 52°05'24" W across land of the City of Portland 97.53 feet to a point of curvature;

Thence, northwesterly across land of the City of Portland along a curve to the right having a radius of 370.00 feet, an arc length of 47.73 feet, chord bearing of N 48°23'40" W and chord length of 47.70 feet to the southerly line of land of said 100 Fore Street LLC;

Thence, N 66°39'40" E along the southerly line of land of said 100 Fore Street LLC 43.19 feet to land of said CPB2 and the point of beginning containing 12,087 square feet more or less and being a portion of the property described in deed book 10924, page 84.

The above described parcel of land is shown on "Exhibit Plan Proposed Parcel City to CPB2 Fore Street Portland, Maine" dated July 2018 by Owen Haskell, Inc.

Bearings are based on Maine State Plane Coordinate System.

EXHIBIT B

Declaration of Covenants, Restrictions, And Option to Repurchase

1. This Declaration of Covenants, Restrictions, and Option to Repurchase (the "Declaration") was contemplated by the terms and conditions of a certain Purchase and Sale Agreement dated December 5, 2016 between Grantor and Grantee, as amended to date, a copy of which is on file with the City of Portland's Department of Finance and incorporated by reference herein (the "Agreement").

2. Access Road.

a. Grantee covenants and agrees to commence construction of a certain Access Road to CPB2's Property, as those terms are defined in the Agreement, within 36 months after the date of the deed to which these Covenants are attached (the "Closing Date"). After the construction of the Access Road has commenced, Grantor shall execute and record an affidavit indicating that the Option (as defined in Section 5 below), including Grantor's right and option to repurchase the Premises, has terminated and is on no further force or effect.

b. In the event that Grantor does not construct the Thames Street Extension (as defined in the Agreement) prior to Grantee's commencement of construction on CPB2's Property, and provided that Grantee, and/or its successors and assigns, is unable to access CPB2's Property from Fore Street, Grantor shall enter into a revocable license agreement with Grantee, and/or its successors or assigns, in a form satisfactory to Grantor, in order to provide the owner of the Premises and the owner of CPB2's Property, and their respective contractors, tenants, and invitees, with access to the Premises and/or to CPB2's Property across other property owned by Grantor that is contiguous to the western boundary of the Premises. Such license agreement shall only be available to Grantee and/or its successors and assigns from the time Grantee loses access to its property from Fore Street until the City completes the construction of the Thames Street Extension.

3. Payment In Lieu Of Property Taxes. Grantee covenants and agrees in the event that the Premises or any portion thereof shall be exempt from real and personal property taxes, by transfer, conversion, or otherwise, then the then-owner of the exempt portion shall make annual payments to the Grantor in lieu of taxes in the amount equal to the amount of property taxes that would have been assessed on the exempt portion of the real and personal property situated on the Premises had such property remained taxable. Grantor hereby confirms that Grantee and its successors and assigns shall possess and be vested with all rights and privileges as to abatement and appeal of valuations, rates, and the like as are accorded owners of real and personal property in Maine.

4. Grantee covenants and agrees to indemnify, defend, and hold Grantor harmless from and against any and all claims, damages, losses, liabilities, obligations, settlement payments, penalties, assessments, citations, directives, claims, litigation, demands, defenses, judgments, costs, or expenses of any kind, including, without limitation, reasonable attorneys', consultants', and experts' fees incurred in investigating, defending, settling, or prosecuting any claim, litigation or proceeding, that may at any time be imposed upon, incurred by or asserted or awarded against Grantee or Grantor and relating directly or indirectly to the violation of or compliance with any federal, state, or local environmental laws, rules, or regulations governing the release, handling or storage of hazardous wastes or hazardous materials and affecting all or any portion of the Premises, except to the extent that such a claim results directly from the Grantor's release, handling or storage of hazardous wastes or hazardous materials on the Premises.

5. Grantor's Option to Repurchase. Subject at all times to the remaining terms and conditions in this Section 5, if Grantee fails to commence construction of the Access Road as described in Section 2 above within 36 months after the Closing Date, Grantor shall have the right, during the one (1) year period from the third (3rd) anniversary of the Closing Date to, and including, the day immediately preceding the fourth (4th) anniversary of the Closing Date (the "Option Period"), but not the obligation, to repurchase the Premises at the Purchase Price set forth in the Agreement (such right set forth above and described below is hereinafter referred to as the "Option").

a. In order to exercise this Option to repurchase, Grantor must notify Grantee in writing (the "Notice") of its intent to do so during the Option Period. If Grantor gives Grantee the Notice during the Option Period, then Grantee shall have the right, but not the obligation, to commence construction of the Access Road within sixty (60) days after Grantee's receipt of the Notice. If Grantee commences construction of the Access Road within sixty (60) days after its receipt of the Notice, then, upon return to Grantor of the Earnest Money described below, the Notice shall be deemed automatically rescinded, and the provisions of this Section 5 shall be deemed of no further force or effect, as of the date of such commencement of construction. If Grantee fails to commence construction of the Access Road within sixty (60) days after its receipt of the Notice, then Grantee agrees that it will reconvey to Grantor the Premises within ten (10) business days after the expiration of said sixty (60) day period for the Purchase Price paid by Grantee to Grantor. The time, place and exact date of the closing shall be agreed to by the parties.

b. In the event Grantor provides the Notice of its intent to exercise the option, the Notice is to be accompanied by a payment to Grantee or its successors or assigns of earnest money in the amount of One Thousand Dollars ($1,000.00) (the "Earnest Money").

c. If Grantor exercises this Option to purchase the Premises, then in consideration of the terms, covenants and conditions contained herein, the parties mutually agree as follows:

i. Upon the giving of the Notice together with the Earnest Money, Grantee shall thereby be bound to sell and City shall thereby be bound to purchase the Premises upon the terms and conditions set forth herein, except as otherwise provided in clause 5.a above. Grantee or its successors, transferees or assigns shall execute, acknowledge and deliver to Grantor a quitclaim deed conveying to Grantor good and marketable title to the Premises, free and clear of all encumbrances and defects in title, except for utility and public easements of record servicing the Premises, and except for those approved by Grantor in its sole discretion. The closing shall be held at the date, time and place agreed to by the parties, or at such reasonable date thereafter as may be required to clear any encumbrance and defects in title, and Grantee or its successors, transferees or assigns shall then and there deliver the deed to Grantor upon tender of the balance of the Purchase Price by wire transfer, certified check, cashier's check, or cash. The balance to be tendered to Grantee or its successors or assigns shall be the Purchase Price, less the Earnest Money and any other option consideration actually received by Grantee.

ii. If counsel for Grantor, or its successors or assigns, shall be of the opinion, given in good faith, that the title to said Premises is defective or is otherwise not free and clear of all material encumbrances or that the title is not marketable, then Grantor, its successors or assigns, shall have the right, provided it or they shall have exercised this Option, to extend the time for conveyance of the Premises, during which time Grantee or its successors, transferees or assigns shall make a reasonable effort to remove such defects at its own expense, to the satisfaction of counsel of Grantor, its successors or assigns. If record title proves defective and Grantee or its successors or assigns shall fail to remove such defect within a reasonable time after notice from Grantor of the nature of the defect, Grantor may, at its election, (a) cure any such defect and deduct the cost thereof from the Purchase Price at closing, or (b) elect to close notwithstanding any such defect, or (c) terminate this Option by written notice to Grantee or its successors or assigns, whereupon all Earnest Money paid by Grantor to Grantee or its successors or assigns shall immediately be returned to Grantor and thereafter the parties shall be relieved of all obligations and this Option shall terminate.

iii. If all obligations of this agreement have been performed, excepting that Grantor does not complete the purchase, Grantee or its successors or assigns shall retain the Earnest Money as full liquidated damages, and without recourse to any other remedies, and whereupon this Option shall terminate and shall be of no further force or effect.

iv. Full possession of the Premises, free of all encumbrances except as aforesaid, is to be delivered to Grantor at closing, with the Premises to be in the reasonably functional condition, reasonable wear and tear excepted.

v. Real estate taxes and utilities shall be prorated as of the time of the passing of title. Real estate transfer taxes, if any, arising in connection with the conveyance of the Premises shall be paid by Grantor and/or Grantee or its successors or assigns in accordance with the custom of the locality where the Premises are situated.

d. Notwithstanding anything else to the contrary herein, in the event that (a) Grantor fails to give the Notice on or before the expiration of the Option Period, (b) Grantee commences construction of the Access Road on or before the third (3rd) anniversary of the Closing Date, or (3) Grantee commences construction of the Access Road within sixty (60) days after Grantee's receipt of the Notice and returns the Earnest Money to Grantor in accordance with Section 5(a) above, the Option, including Grantor's right and option to repurchase the Premises, shall terminate and shall be of no further force or effect, and upon such termination, Grantor shall execute and record an affidavit indicating that the Option, including Grantor's right and option to repurchase the Premises, has terminated and is of no further force or effect.

e. The parties hereto hereby agree that this right and option to purchase, and the Grantor's rights in the Premises thereby created, are immediately fully vested and are hereby deemed to be fully vested in any event, not contingent, and shall, by agreement, not be subject to the Rule Against Perpetuities, or any statutory enactment thereof, or similar law.

f. This Option is personal to Grantor (City of Portland) and cannot be assigned to or exercised by any other person or entity.

6. This Declaration may be amended or modified in whole or in part only by written agreement of Grantee and Grantor.

7. The covenants and option to repurchase set forth herein are intended to, and shall, run with the Premises and shall bind all subsequent owners of the Premises.

8. Except as specifically set forth herein, this Declaration shall survive a sale, transfer, foreclosure or transfer of title in lieu of foreclosure, or other disposition of the Premises.

9. This Declaration is enforceable by Grantor as a contract and shall inure to the benefit of and be enforceable by Grantor, its successors, and assigns.

10. The validity of any clause, part or provision of this Declaration shall not affect the validity of the remaining portions of thereof.

Received
Recorded Register of Deeds
Nov 05,2018 09:28:05A
Cumberland County
Nancy A. Lane

Doc#: 14813 Bk:35576 Pg: 153

MAINE REAL ESTATE TAX PAID

SHORT FORM QUITCLAIM DEED WITH COVENANT

DLN No. 1001940054598

100 FORE STREET, LLC, a Maine limited liability company with a mailing address of P.O. Box 910, Westbrook, Maine 04098-0910 ("Grantor") FOR CONSIDERATION PAID, grants to **CPB2 I LLC** ("Buyer"), a Delaware limited liability company, having an address at Merrill's Wharf, 254 Commercial Street, Suite 118, Portland, Maine 04101 ("Grantee") with QUITCLAIM COVENANT, certain real property, with any improvements thereon, located at or near 100 Fore Street, Portland, Cumberland County, Maine, and more particularly described on **Exhibit A** attached hereto and made a part hereof.

Being a portion of the premises described in Quitclaim Deed with Covenant granted by Hope 1, LLC to the Grantor dated January 6, 2017 and recorded in the Cumberland County Registry of Deeds in Book 33748, Page 1.

IN WITNESS WHEREOF, 100 Fore Street, LLC has caused this instrument to be executed and delivered by Jonathan S. Cohen, its duly-authorized Manager as of this 10th day of April, 2019.

WITNESS:

100 FORE STREET, LLC

By: MANAGER
Jonathan S. Cohen Manager

State of Maine
County of Cumberland

April 10, 2019

PERSONALLY APPEARED before me the above-named Jonathan S. Cohen, Manager of 100 Fore Street, LLC, and acknowledged the foregoing instrument to be his free act and deed in his said capacity and the free act and deed of said limited liability company.

Before me,

Name: Hawley Strait
~~Notary Public~~/Attorney at Law
~~Commission Expires~~

EXHIBIT A

A certain lot or parcel of land situated southerly of but not adjacent to Fore Street in the City of Portland, County of Cumberland and State of Maine bounded and described as follows:

Beginning at a point on the southerly line of land of CPB2 LLC at the southeasterly corner of land now or formerly of 100 Fore Street, LLC as described in deed book 33748, page 1;

Thence, S 66°39'40" W along the southerly line of land of said 100 Fore Street LLC 43.19 feet;

Thence, the following courses and distances through the land of the grantor:

Northwesterly along a curve to the right having a radius of 370.00 feet, an arc length of 13.77 feet, chord bearing of N 43°37'59" W and chord length of 13.77 feet;

N 42°34'01" W 68.76 feet;

Northwesterly along a curve to the right having a radius of 370.24 feet, an arc length of 134.07 feet, chord bearing of N 32°11'34" W and chord length of 133.34 feet the easterly line of land of said CPB2, LLC;

Thence, southeasterly along a curve to the left having a radius of 274.33, an arc length of 235.73 feet, chord bearing of S 46°50'20" E and chord length of 228.54 feet to the point of beginning, containing 2,247 square feet, more or less and being a portion of the property described in deed book 33748, page 1.

The above described parcel of land is shown on "Exhibit Plan Proposed Parcel to be Conveyed Fore Street Portland, Maine" dated February 2018 by Owen Haskell, Inc.

Bearings are based on Maine State Plane Coordinate System.

Received
Recorded Register of Deeds
Apr 12,2019 01:15:52P
Cumberland County
Nancy A. Lane

EXCHANGE AGREEMENT

THIS EXCHANGE AGREEMENT (this "Agreement") made this 21st day of June, 2017 by and between the CITY OF PORTLAND, a body politic and corporate located in Cumberland County, Maine (hereinafter referred to as "CITY"), CPB2 LLC, a Delaware limited liability company, having a mailing address of c/o CPB2 Management LLC, P.O. Box 7987, Portland, Maine 04112 (hereinafter referred to as "CPB2"), and STATE OF MAINE DEPARTMENT OF TRANSPORTATION, an agency of the State of Maine, having a mailing address of 16 State House Station, Augusta, Maine 04333-0016 (hereinafter referred to as "DOT"). For the purposes of this Agreement, the CITY, CPB2 and DOT are sometimes hereinafter collectively referred to as the "Parties" and individually as a "Party."

RECITALS

WHEREAS, CITY is the owner of that certain real property located along the eastern waterfront that is designated on the official tax map for the City of Portland as Block 448, Lot A-1 (the "CITY Property"); and

WHEREAS, CPB2 is the owner of that certain real property known as 58 Fore Street in the City of Portland, County of Cumberland and State of Maine, which is more particularly described in deeds dated July 19, 2013 and April 1, 2014 and recorded in the Cumberland County Registry of Deeds in Book 30879, Page 75 and Book 31425, Page 267 respectively (the "CPB2 Property"); and

WHEREAS, DOT is the owner of that certain right of way along the eastern waterfront that is designated on the official tax map for the City of Portland as Block 18, Lot A-13 (the "DOT Right of Way"); and

WHEREAS, in connection with the construction of the Thames Street extension and the development of the CPB2 Property, CITY and CPB2 have proposed the relocation of a portion of the DOT Right of Way in the manner shown on the Land Transfer Plan prepared by Woodard & Curran dated December 1, 2016 and revised January 10, 2017, a copy of which is attached hereto as Exhibit A (the "Plan"); and

WHEREAS, DOT has approved the relocation of the DOT Right of Way, as shown on the Plan; and

WHEREAS, in order to accomplish such relocation, the parties have agreed to certain property transfers, as identified herein; and

WHEREAS, the parties hereto desire to memorialize their agreements;

NOW THEREFORE, in consideration of the foregoing and for other good and valuable consideration, the receipt and sufficiency of which is hereby acknowledged, the parties, intending to be legally bound, hereby agree as follows:

1. **EXCHANGE.** In accordance with the terms and conditions set forth in this Agreement, (i) CITY agrees to transfer to DOT the property designated on the Plan as "City to MDOT" (the "CITY/DOT Exchange Property") by municipal quitclaim deed, (ii) DOT agrees to transfer to CITY the property designated on the Plan as "DOT to City" (the "DOT/CITY Exchange Property") by deed of vacation, (iii) DOT agrees to transfer to CPB2 the property designated on the Plan as "DOT to CPB2" (the "DOT/CPB2 Exchange Property") by deed, of vacation (iv) CPB2 agrees to transfer to DOT the property designated on the Plan as "CPB2 to DOT" (the "CBP2/DOT Exchange Property") by quitclaim deed, and (v) CPB2 agrees to transfer to CITY the property designated on the Plan as "CPB2 to City" (the "CPB2/CITY Exchange Property") by quitclaim deed, together with an easement in a form satisfactory to the CITY and CPB2 allowing public access over the entire five foot strip of land separating the CPB2/CITY Exchange Property from the water(said properties being hereinafter collectively referred to as the "Exchange Properties" and individually referred to as an "Exchange Property").

2. **CONSIDERATION**. The parties agree that the properties being conveyed are of a comparable size and value and that there is no additional consideration being paid or received by any party in connection with the exchanges.

3. **SURVEY.** CPB2 shall, at is sole expense, cause an ALTA survey to be prepared that will more specifically describe, by metes and bounds, the Exchange Properties. CPB2 shall provide such survey and associated property descriptions to the CITY and to DOT on or before the expiration of the Due Diligence Period (as defined in Paragraph 4.a) for their review and approval.

4. **TITLE.**

   a. Due Diligence Period. Each Party will have from the date of this Agreement until 4:00 PM Eastern Daylight Savings Time on the day that is one hundred eighty (180) days after the date of this Agreement (the "Due Diligence Period") to complete its title and survey examinations.

   b. Title and Survey Objections. Each Party will have thirty (30) days from the expiration of the Due Diligence Period (the "Due Diligence Response Period") to deliver to the other Parties any written objections to title or survey matters (other than the permitted exceptions identified herein), including, but not limited to, those affecting marketability or use. Objections not made prior to the end of the Due Diligence Response Period will be deemed waived; provided, however, that objections pertaining to matters of record first appearing after the date of this Agreement may be made at any time prior to the closing.

   c. Option to Cure. In the event of (i) an objection to the title or the survey pursuant to Paragraph 4.b or (ii) an objection to the results of the Inspection (as defined in Paragraph 5.a) pursuant to Paragraph 5.f, the Party who owns the property to which such objection relates (the "Notice Recipient") will have the option, but not the obligation, to cure the objection and will notify the

Party who gave the objection notice (the "Notice Sender") of its election within ten (10) business days after receipt of the objection. In the event that the Notice Recipient elects to cure the objection, it will have sixty (60) days from the date of the notice of election, or such other reasonable time as the Parties may agree, to cure the objection to the satisfaction of the Notice Sender. In the event that the Notice Recipient does not elect to cure the objection, or, having elected to cure the objection fails to timely do so to the satisfaction of the Notice Sender, then the Notice Sender will have the option to (1) terminate this Agreement (after which the Parties will not have any further obligation or liability to the other Parties under this Agreement), (2) waive the objection and close, or (3) undertake the cure of such objection at its own expense (in which case it shall have 60 days to do so). In the event the Notice Sender elects to cure such objection, but the Notice Sender is unable to cure such objection to its reasonable satisfaction within said 60-day period, then the Notice Sender will have the option to (1) terminate this Agreement (after which the Parties will not have any further obligation or liability to the other under this Agreement), or (2) waive the objection and close.

d. CPB2 shall convey its property at the closing in fee simple by a quitclaim deed. The City shall convey its property at the closing in fee simple by municipal quitclaim deed. Title shall be free and clear of all encumbrances, except (i) easements for utilities servicing the property, (ii) zoning ordinances, and (iii) real estate taxes not yet due and payable.

e. DOT shall convey its property at the closing as a full release of whatever property interest(s) DOT holds by a deed of vacation. Title shall be free and clear of all encumbrances, except (i) easements for utilities servicing the property, and (ii) zoning ordinances.

5. <u>INSPECTIONS</u>.

a. During the Due Diligence Period and the Due Diligence Response Period, each Party and their respective employees, consultants, contractors and agents shall have the right, at such Party's expense (except as otherwise set forth herein), to enter on the Exchange Property being conveyed to them, at reasonable times, in order to (i) inspect the same, (ii) conduct engineering studies, percolation tests, geotechnical exams, environmental assessments, and other such studies, tests, exams, and assessments, and (iii) do such other things as such Party determines, in its sole discretion, to be required to determine the suitability of such Exchange Property for such Party's intended use (collectively, the "Inspections"). The Parties acknowledge that such Inspections may include the digging of test pits, which each Party hereby approves.

b. To the extent permitted by law, the Party performing the Inspections agrees to defend, indemnify and hold harmless the Party on whose property the Inspections are being performed against any mechanics' liens that may

arise from the activities of said Party and its employees, consultants, contractors and agents on the property.

c. Each Party shall exercise the access and inspection rights granted hereunder at its sole risk and expense, and the Party performing the Inspections hereby releases the Party on whose property the Inspections are being performed from, and agrees to indemnify, defend, and hold said Party harmless, to the extent permitted by law, against, any and all losses, costs, claims, expenses and liabilities (including without limitation reasonable attorney fees and costs) (collectively, "Damages") suffered by said Party on account of any injury to person or damage to property arising out of the exercise by the other Party of its rights hereunder, except to the extent that such Damages result from the act or omission of the Party on whose property the Inspections are being performed. Nothing in this Agreement shall waive any defense, immunity or limitation of liability that may be available to CITY and/or DOT under the Maine Tort Claims Act (14 M.R.S. § 8101 et seq.) or any other privileges or immunities provided by law. Any other provision of this Agreement to the contrary notwithstanding, this provision shall survive any termination or expiration of this Agreement.

d. The Party (other than DOT and the CITY) performing the Inspections shall cause any contractors, consultants or any other party conducting the Inspections to procure automobile insurance and general commercial or public liability insurance coverage in amounts of not less than Four Hundred Thousand Dollars ($400,000.00) per occurrence for bodily injury, death and property damage and also Workers' Compensation Insurance coverage to the extent required by law. DOT and the City are self-insured.

e. In the event that the Party performing the Inspections does not acquire the property in question for any reason or for no reason, said Party agrees to either return the property in question as nearly as possible to its original condition after conducting the Inspections, or, at the option of the Party who owns the property in question, reimburse the Party owning the property for any physical damage caused to the property in question in connection with the Inspections; provided, however, the Parties hereby acknowledge and agree that the term "physical damage" does not include any disturbance of any pre-existing environmental contamination on the property caused by such inspections, studies, tests, exams, and assessments, and that the Party performing such Inspections shall have no obligation to clean-up, remove or take any other action with respect to any pre-existing environmental contamination disturbed thereby.

f. The parties hereto acknowledge and agree that it is a condition to each Party's obligations under this Agreement that the results of the Inspections be acceptable to the Party performing such Inspections in its sole discretion. If the results of such due diligence are not acceptable to the Party performing such Inspections in its sole discretion, then such Party

shall notify the Party who owns the property to which such results relate, and the provisions of Paragraph 4.c shall apply. If such Party ultimately exercises its right to terminate this Agreement, then the Parties shall not have any further obligations or liabilities under this Agreement to each other except as expressly set forth in this Agreement.

6. **TAXES, PRORATIONS AND RECORDING FEES.**

   a. CPB2 shall be liable for all real estate taxes attributable to the CPB2/DOT Exchange Property and the CPB2/CITY Exchange Property through the end of the fiscal year in which the closing occurs. CPB2 shall be liable for all real estate taxes attributable to the DOT/CPB2 Exchange Property beginning as of the start of the fiscal year following the closing and continuing thereafter. Because the DOT/CPB2 Exchange Property, the DOT/CITY Exchange Property, and the CITY/DOT Exchange Property are currently owned by entities that are exempt from real estate taxes, no taxes have been assessed or will be due for any portion of the current fiscal year, and no taxes will be prorated for those properties at the closing.

   b. The DOT/CPB2 Exchange Property and the CPB2/CITY Exchange Property are the only Exchange Properties subject to Maine real estate transfer tax at closing, and any transfer tax due shall be paid for by CPB2 in accordance with 36 M.R.S. § 4641-A. CITY and DOT are exempt from paying the transfer tax pursuant to 36 M.R.S. § 4641-C, and the transfer of the CPB2/DOT Exchange Property is exempt because it is a conveyance to DOT for transportation purposes..

   c. The recording fees for the various deeds shall be paid for by CPB2.

7. **DEFAULT AND REMEDIES**. In the event that any Party defaults under this Agreement, any of the non-defaulting Parties shall have the right (i) to the extent permitted by law, to pursue specific performance or (ii) in lieu of specific performance, as its sole remedy to terminate this Agreement (after which the Parties will not have any further obligation or liability to the other under this Agreement).

8. **RISK OF LOSS.** The risk of loss or damage to any of the Exchange Properties by fire, eminent domain, condemnation, or otherwise, until transfer of title hereunder, is assumed by the owner of the Exchange Property in question. The Exchange Properties are to be delivered in substantially the same condition as of the date of this Agreement unless otherwise stated. In the event any Party is not able to deliver their Exchange Property as stated, any of the other Parties may terminate this Agreement, and the Parties shall not have any further obligations or liabilities under this Agreement except as expressly set forth in this Agreement.

9. **PROPERTY SOLD "AS IS, WHERE IS**." Except as otherwise set forth in this Agreement, each Party acknowledges (i) that, by the end of the Due Diligence Response Period, it will have had an opportunity to inspect the Exchange Property it is receiving, or to hire professionals to do so; (ii) that such Exchange Property will be

sold "as is, where is" and "with all faults;" and (iii) that the current owner of such Exchange Property, and its agents, shall not be deemed to have made any representations or warranties with respect to such Exchange Property, including, without limitation, the accuracy of any statement relating to boundaries or acreage, or relating to any other matters contained in any description of such Exchange Property, or relating to the fitness of such Exchange Property for a particular purpose, or relating to development rights, merchantability, habitability, or as to any other matter, including without limitation, land use, zoning and subdivision issues or the environmental, mechanical, or structural condition of such Exchange Property. Acceptance by a Party of the deed at closing to the Exchange Property it is receiving shall be deemed to be full performance and discharge by the Party conveying such Exchange Property of every agreement and obligation contained herein.

10. **CLOSING**. Time is of the essence in the performance of this Agreement. The closing shall be held at the offices of CPB2's counsel at a time agreeable to the Parties on or before the earlier of that date that is 30 days after the date that the CITY receives the last of the Thames Street Extension Approvals, as that term is defined below, or January 31, 2018, so long as the Due Diligence Response Period has expired. Provided, however, that if the CITY has not received the last of the Thames Street Extension Approvals by January 1, 2018, the closing date, may, upon the mutual agreement of the Parties, be extended to a later date agreed to by the Parties. At the closing:

    a. each Party shall execute, acknowledge and deliver the deed required under this Agreement to convey title to the Exchange Property in question, free and clear of all encumbrances other than those approved by the recipient of such Exchange Property in its sole discretion;

    b. each Party shall execute, acknowledge and deliver such affidavits and indemnifications, to the extent permitted by law, in form and substance reasonably satisfactory to the applicable Parties, regarding mechanics' liens, materialmen's' liens and parties in possession sufficient to eliminate any title insurance exceptions for these matters;

    c. each Party shall deliver to the others such other documents, certificates and the like as may be required herein or as may be necessary to carry out the obligations under this Agreement; and

    d. DOT will grant to CPB2 an easement in accordance with the provisions of Paragraph 1(b) of an associated MOU, as such MOU is defined in Paragraph 11 below.

    For the purposes of this Agreement, the term "Thames Street Extension Approvals" shall mean CITY'S receipt of all necessary permits and regulatory approvals to construct the Thames Street extension and related utilities and the appropriation by the Portland City Council of the funds necessary to do so.

11. CONTINGENCIES. DOT and CPB2 entered into a certain Memorandum of Understanding dated March 31, 2015 relating to the portion DOT Right of Way that bisects the CPB2 Property, which memorandum contemplated the exchange of property between the parties thereto (the "MOU"). DOT and CPB2 acknowledge and agree that DOT's obligations under this Agreement are contingent upon (i) the submission to DOT of the geological tests of the soils required by Paragraph 3 of the MOU and, if applicable, the performance of the work described in Paragraph 3.b of the MOU, (ii) the consent of the CITY to the relocation of the Trail Corridor (as defined in the MOU), as contemplated by Paragraph 7 of the MOU, and (iii) if applicable, CPB2 obtaining the consent of the Trust for the Preservation of Maine Industrial History and Technology (the "Narrow Gauge") to the relocation of the narrow gauge railroad track or to the terms of a lease agreement between the Narrow Gauge and CPB2 to replace the terms of the Narrow Gauge's existing lease with DOT, as contemplated by Paragraphs 4 and 7 of the MOU.

12. ENVIRONMENTAL ASSESSMENT.

As outlined in the MOU, if it is determined by CPB2 that a Phase I Environmental Site Assessment of the existing Rail Corridor, as such is defined in the MOU, is required in connection with the exchange contemplated herein, CPB2 agrees to obtain, at its sole cost and expense, such Phase I Assessment and to submit the resulting report to DOT for review.

a. If, as a result of the findings of the Phase I Assessment, it is determined that a Phase II Environmental Site Assessment is required, CPB2 agrees to obtain, at its sole cost and expense, such Phase II Assessment and to submit the resulting report and all data and associated documentation to DOT for review.

b. If it is determined that environmental remediation is required in connection with the existing Rail Corridor, the Parties acknowledge that DOT shall not be required to perform such remediation unless CPB2 agrees to pay for all associated costs or DOT is otherwise reimbursed for such costs.

13. RELATED WORK.

a. If CPB2 elects to relocate the narrow gauge railroad track, as contemplated by Paragraph 4.a of the MOU, and if the Narrow Gauge has consented to such relocation, then CPB2 agrees to relocate the same at no expense to DOT or to the Narrow Gauge. DOT acknowledges that such work will be done in connection with the redevelopment of the portion of the DOT/CPB2 Exchange Property on which the narrow gauge railroad tracks currently exist and will likely occur after the closing.

b. CPB2 agrees further to relocate the Trail Corridor (as defined in the MOU) at no expense to DOT or to CITY. DOT and CITY acknowledge that such work will be done in connection with the redevelopment of the marina or the redevelopment of the portion of the CPB2 Property that runs along the shoreline, and will likely occur after the closing. If the new location of the Trail Corridor, as shown on an

approved site plan, is partly on the CPB2 Property, then CPB2 agrees to grant to CITY an easement over such portion on substantially the same terms and conditions as set forth in the easement granted by DOT to CITY.

c. In connection with the relocation of the narrow gauge railroad tracks and/or the relocation of the Trail Corridor, DOT agrees to grant to CPB2 a temporary, construction right over the relocated DOT Right of Way to the extent reasonably required to relocate the narrow gauge railroad tracks and/or the Trail Corridor. If requested by CPB2, CITY also agrees to grant to CPB2 a temporary, construction right in form and substance reasonably satisfactory to the CITY, over the relocated Trail Corridor to the extent reasonably required to relocate the narrow gauge railroad tracks and/or the Trail Corridor.

d. DOT acknowledges that the relocation of the narrow gauge railroad tracks and/or the Trail Corridor may require site plan approval or other governmental approval, and DOT agrees to reasonably cooperate with CPB2 in connection with such approvals and to execute and deliver any documents reasonably requested by CPB2 or any governmental entity, department or agency in connection therewith, provided such documents are in form and substance reasonably satisfactory to DOT and do not require DOT to undertake any construction work in connection with such relocation or relocations.

e. The provisions of this Paragraph 13 shall survive the closing.

14. ENTIRE AGREEMENT. This Agreement represents the entire and complete Agreement and understanding between the Parties and supersedes any prior agreement or understanding, written or oral, between the Parties with respect to the acquisition or exchange of the Exchange Properties hereunder. This Agreement cannot be amended except by written instrument executed by the CITY, CPB2 and DOT.

15. NON-WAIVER. No waiver of any breach of any one or more of the conditions of this Agreement by a Party shall be deemed to imply or constitute a waiver of any succeeding or other breach hereunder.

16. HEADINGS AND CAPTIONS. The headings and captions appearing herein are for the convenience of reference only and shall not in any way affect the substantive provisions hereof.

17. BINDING EFFECT. This Agreement shall be binding upon and inure to the benefit of the Parties and their respective heirs, administrators, successors and assigns.

18. TIME IS OF THE ESSENCE. The CITY, CPB2 and DOT each confirm and agree that each of the time periods set forth herein are essential provisions of the terms of this Agreement.

19. GOVERNING LAW. This Agreement shall be construed in all respects in accordance with, and governed by, the laws of the State of Maine. The Parties hereto hereby consent to the exclusive jurisdiction of the Superior Court for the County of

Cumberland in the State of Maine, for all actions, proceedings and litigation arising from or relating directly or indirectly to this Agreement or any of the obligations hereunder, and any dispute not otherwise resolved as provided herein shall be litigated solely in said Court. If any provision of this Agreement is determined to be invalid or unenforceable, it shall not affect the validity or enforcement of the remaining provisions hereof.

20. NOTICE. All notices, demands and other communications hereunder shall be in writing and shall be deemed to have been duly given on the date of service if served personally on the party to whom notice is to be given, or on the first business day after mailing if mailed to the party to whom notice is to be given by first class mail, postage prepaid, certified, return receipt requested, addressed to the recipient at the addresses set forth below. Either party may change addresses for purposes of this paragraph by giving the other party notice of the new address in the manner described herein.

FOR THE CITY:	City of Portland ATTN: CITY MANAGER 389 Congress Street Portland, ME 04101
With a copy to:	The Office of the Corporation Counsel at the same address.
FOR CPB2:	CPB2 LLC c/o CPB2 Management LLC P.O. Box 7987 Portland, Maine 04112
With a copy to:	Bernstein, Shur, Sawyer & Nelson, P.A. Attention: Mary E. Costigan, Esq. 100 Middle Street, West Tower Portland, Maine 04101
FOR DOT:	STATE OF MAINE DEPARTMENT OF TRANSPORTATION Attention: Toni Kemmerle, Esq. 16 State House Station Augusta, Maine 04333-0016

21. SIGNATURES; MULTIPLE COUNTERPARTS. This Agreement may be executed in any number of counterparts and by different parties in separate counterparts. Each counterpart when so executed shall be deemed to be an original and all of which together shall constitute one and the same agreement.

22. BROKERS. The CITY, CPB2 and DOT each represent and warrant that they have not dealt with a real estate broker in connection with this transaction. CPB2 agrees to indemnify and hold harmless the CITY and DOT from any claims made by any broker

should CPB2's representation in this paragraph be false. To the extent permitted by law, the CITY and DOT agree to indemnify and hold harmless CPB2 from any claims made by any broker should the representation by the CITY or DOT in this paragraph be false. The foregoing indemnities shall include all legal fees and costs incurred in defense against any such claim, and shall survive the closing.

IN WITNESS WHEREOF, the Parties have hereunto set their hands and seals on the day and year first written above.

CITY OF PORTLAND

Judith Rosen
WITNESS

By: Jon P. Jennings
Jon P. Jennings
Its: City Manager

CPB2 LLC
By: CPB2 Management LLC, Manager

Richard A. Cranton
WITNESS

By: [signature]
Name: CASEY PRENTICE
Its: MANAGER

MAINE DEPARTMENT OF TRANSPORTATION

Melissa Pushard
WITNESS

By: [signature]
David Bernhardt
Its Commissioner

Approved as to Form:
MB
Corporation Counsel's Office

EXHIBIT A

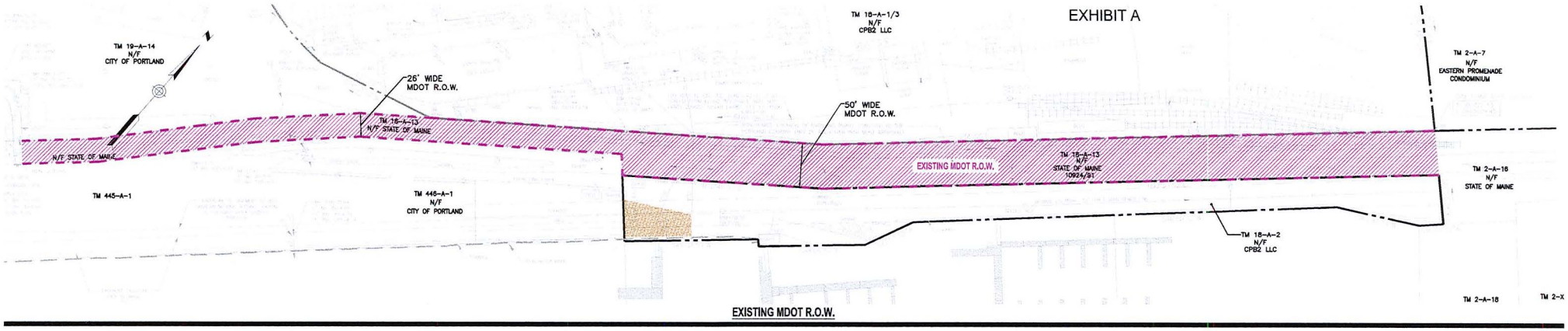

EXISTING MDOT R.O.W.

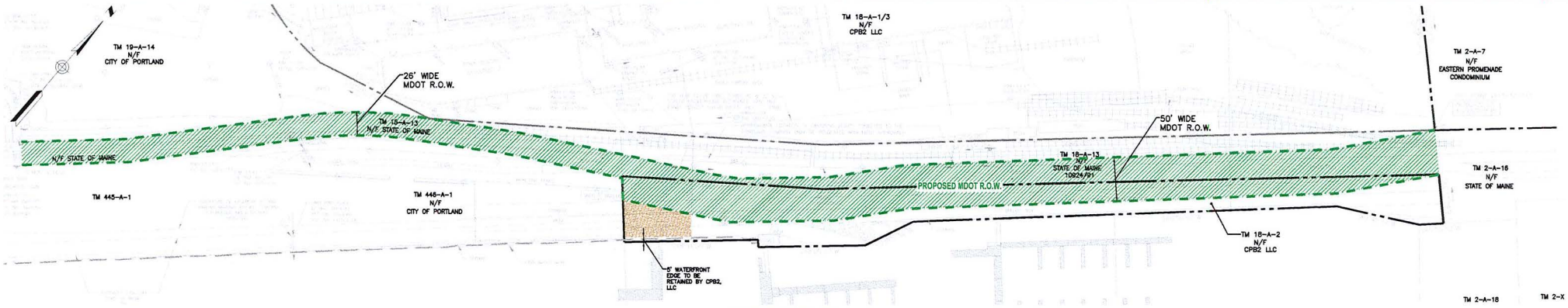

PROPOSED MDOT R.O.W.

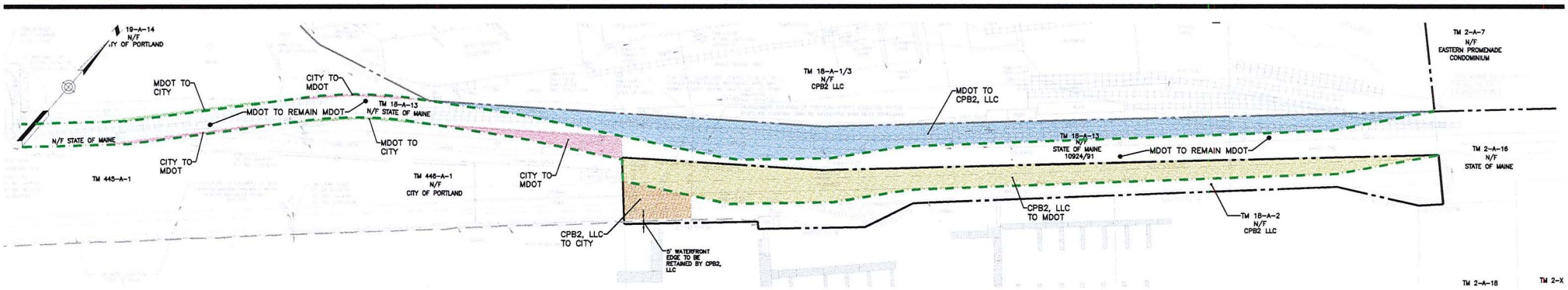

Scale: 1" = 50'
12/1/2016

CPB2 LLC
EASTERN WATERFRONT DEVELOPMENT PORTLAND, MAINE

50' 0 50' 100'
BAR SCALE
1" = 50'
CHECK GRAPHIC SCALE BEFORE USING

PLAN REFERENCE
SOURCE OF EXISTING CONDITIONS: PLAN ENTITLED "BOUNDARY & TOPOGRAPHIC SURVEY AT 58 FORE STREET, PORTLAND, ME" PREPARED BY OWEN HASKELL, INC., FALMOUTH, ME 04105, DATED AUGUST 19, 2016 (REV. DATE 10/3/2016).
HORIZONTAL DATUM: NAD83, MAINE STATE PLAIN, WEST ZONE, US FOOT
VERTICAL DATUM: CITY OF PORTLAND DATUM

PROPOSED LAND TRANSFERS

58 FORE STREET
MDOT R.O.W. FIGURE - 1

WOODARD & CURRAN

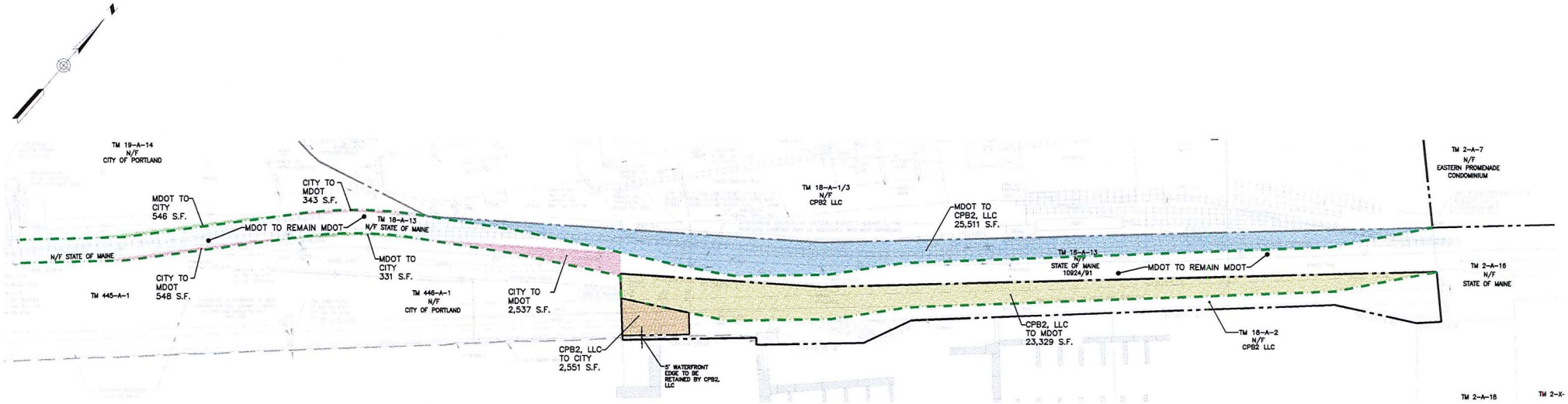

PROPOSED LAND TRANSFERS

CITY

EXISTING CITY LAND TRANSFERRED TO:		NEW CITY LAND TRANSFERRED FROM:	
MDOT	548 S.F.	MDOT	546 S.F.
	343 S.F.		331 S.F.
	2,537 S.F.		
CPB2	0 S.F.	CPB2	2,551 S.F.
	TOTAL: 3,428 S.F.		TOTAL: 3,428 S.F.

MDOT

EXISTING MDOT LAND TRANSFERRED TO:		NEW MDOT LAND TRANSFERRED FROM:	
CITY	546 S.F.	CITY	548 S.F.
	331 S.F.		343 S.F.
			2,537 S.F.
CPB2	25,511 S.F.	CPB2	23,329 S.F.
	TOTAL: 26,388 S.F.		TOTAL: 26,757 S.F.

CPB2

EXISTING CPB2 LAND TRANSFERRED TO:		NEW CPB2 LAND TRANSFERRED FROM:	
CITY	2,551 S.F.	CITY	0 S.F.
MDOT	23,329 S.F.	MDOT	25,511 S.F.
	TOTAL: 25,880 S.F.		TOTAL: 25,511 S.F.

Scale: 1" = 50'
1/10/2017

CPB2 LLC
EASTERN WATERFRONT DEVELOPMENT PORTLAND, MAINE

50' 0 50' 100'
BAR SCALE
1" = 50'
CHECK GRAPHIC SCALE BEFORE USING

PLAN REFERENCE
SOURCE OF EXISTING CONDITIONS: PLAN ENTITLED "BOUNDARY & TOPOGRAPHIC SURVEY AT 58 FORE STREET, PORTLAND, ME" PREPARED BY OWEN HASKELL, INC., FALMOUTH, ME 04105, DATED AUGUST 19, 2016 (REV. DATE 10/3/2016).
HORIZONTAL DATUM: NAD83, MAINE STATE PLAIN, WEST ZONE, US FOOT
VERTICAL DATUM: CITY OF PORTLAND DATUM

58 FORE STREET
MDOT R.O.W. FIGURE - 2

WOODARD & CURRAN

FIRST AMENDMENT TO
EXCHANGE AGREEMENT

THIS FIRST AMENDMENT TO EXCHANGE AGREEMENT (this "Amendment") dated as of the _____ day of January , 2018 (the "Effective Date"), is made by and between the City of Portland, a body politic and corporate, having an address of 389 Congress Street, Portland, Maine ("City"), CPB2 LLC , a Delaware Limited Liability Company , having a mailing address of P.O. Box 7987, Portland, Maine (the "CPB2") and the State of Maine Department of Transportation, an agency of the State of Maine, having a mailing address of 16 State House Station, Augusta, Maine 04333-0016 ("DOT"). All capitalized terms not otherwise defined herein shall have the meaning given them in the Agreement (as such term is defined below).

WHEREAS, the City, CPB2 and DOT entered into a certain Exchange Agreement dated as of June 21, 2017 (the "Agreement");

WHEREAS, Section 10 of the Agreement currently provides for closing to occur on or before the earlier of the date that is 30 days after the date that the City receives the last of the Thames Street Extension Approvals or January 31, 2018; and

WHEREAS, the City, CPB2, and DOT desire to extend the closing date to April 1, 2018;

NOW THEREFORE, in consideration of the mutual covenants and agreements set forth herein below, and for other good and valuable consideration, the parties hereto agree as follows:

1. **Amendment to Agreement.** The first paragraph of Section 10 of the Agreement is hereby amended to replace "January 31, 2018" with "April 1, 2018."

2. **Ratification.** The parties hereto hereby reaffirm and ratify the continued effectiveness of the Agreement as modified by this Amendment. The parties agree, affirm, and reaffirm that each and every term, condition, and covenant of the Agreement, shall continue in effect except as specifically modified by this Amendment.

3. **Amendments, Etc.** No amendment, modification, or waiver of any provision of this Amendment, or consent to any departure from the terms of this Amendment by any party hereto shall be effective unless the same shall be in writing and signed by all the parties hereto, and then such waiver or consent shall be effective only in the specific instance and for the specific purpose for which given.

4. **No Waiver; Remedies.** No failure on the part of any party hereto to exercise, and no delay in exercising, any right hereunder shall operate as a waiver thereof, nor shall any single or partial exercise of any right hereunder preclude any other or further exercise thereof or the exercise of any other right. The remedies herein provided, and provided in the Agreement, are cumulative and not exclusive of any remedies provided by law.

5. **Successors and Assigns.** This Amendment shall be binding upon and inure to the benefit of the parties hereto and their respective successors and assigns.

6. **Severability.** Each provision of this Amendment is intended to be severable and, if any term or provision of this Amendment is determined to be illegal or invalid for any reason whatsoever, such illegality or invalidity shall not affect the validity or legality of the remainder of this Amendment.

7. **Counterparts.** This Amendment may be signed in any number of counterparts, each of which shall be an original and, when taken together, shall constitute one agreement.

IN WITNESS WHEREOF, the parties hereto have caused this Amendment to be executed by a duly authorized officer of each of them as of the date first written above.

CITY OF PORTLAND:

By: _____
Name: Jon P. Jennings
Title: City Manager

CPB2:

By: _____
Name: Casey Prentice
Title: Manager

MAINE DEPARTMENT OF TRANSPORTATION:

By: _____
Name: David Bernhardt
Title: Commissioner

SECOND AMENDMENT TO
EXCHANGE AGREEMENT

THIS SECOND AMENDMENT TO EXCHANGE AGREEMENT (this "Amendment"), dated as of the 3rd day of August, 2018, is made by and between the City of Portland, a body politic and corporate, having an address of 389 Congress Street, Portland, Maine 04101 ("City"), CPB2 I LLC , doing business as CPB2 LLC, a Delaware Limited Liability Company, having a mailing address of Merrill's Wharf, 254 Commercial Street, Suite 118, Portland, Maine 04101 ("CPB2"), and the State of Maine Department of Transportation, an agency of the State of Maine, having a mailing address of 16 State House Station, Augusta, Maine 04333-0016 ("DOT"). All capitalized terms not otherwise defined herein shall have the meaning given them in the Agreement (as such term is defined below).

WHEREAS, the City, CPB2 and DOT entered into a certain Exchange Agreement dated as of June 21, 2017, as amended by a certain First Amendment To Exchange Agreement dated January 2018 (collectively, the "Agreement");

WHEREAS, Section 10 of the Agreement currently provides for closing to occur on or before the earlier of the date that is 30 days after the date that the City receives the last of the Thames Street Extension Approvals or April 1, 2018; and

WHEREAS, the City, CPB2, and DOT desire to affirm the continued effectiveness of the Agreement and to extend further the closing date to December 1, 2018;

NOW THEREFORE, in consideration of the mutual covenants and agreements set forth herein below, and for other good and valuable consideration, the parties hereto agree as follows:

1. **Name and Address Update; Effective Date.** The reference to "CPB2" is hereby amended to replace CPB2 LLC with CPB2 I LLC, doing business as CPB2 LLC, and to update the associated address to Merrill's Wharf, 254 Commercial Street, Suite 118, Portland, Maine 04101. In addition, notwithstanding the date of the Amendment set forth above, the parties hereto agree that the Amendment shall be deemed effective as of March 30, 2018 (the "Effective Date").

2. **Amendment to Agreement.** The first paragraph of Section 10 of the Agreement is hereby amended further to replace "April 1, 2018" with "December 1, 2018."

3. **Ratification.** The parties hereto hereby reaffirm and ratify the continued effectiveness of the Agreement as modified by this Amendment. The parties agree, affirm, and reaffirm that each and every term, condition, and covenant of the Agreement, shall continue in effect except as specifically modified by this Amendment.

4. **Amendments, Etc.** No amendment, modification, or waiver of any provision of this Amendment, or consent to any departure from the terms of this Amendment by any party hereto shall be effective unless the same shall be in writing and signed by all the parties hereto, and then such waiver or consent shall be effective only in the specific instance and for the specific purpose for which given.

5. **No Waiver; Remedies.** No failure on the part of any party hereto to exercise, and no delay in exercising, any right hereunder shall operate as a waiver thereof, nor shall any single or partial exercise of any right hereunder preclude any other or further exercise thereof or the exercise of any other right. The remedies herein provided, and provided in the Agreement, are cumulative and not exclusive of any remedies provided by law.

6. **Successors and Assigns.** This Amendment shall be binding upon and inure to the benefit of the parties hereto and their respective successors and assigns.

7. **Severability.** Each provision of this Amendment is intended to be severable and, if any term or provision of this Amendment is determined to be illegal or invalid for any reason whatsoever, such illegality or invalidity shall not affect the validity or legality of the remainder of this Amendment.

8. **Counterparts.** This Amendment may be signed in any number of counterparts, each of which shall be an original and, when taken together, shall constitute one agreement.

[END OF DOCUMENTS; SIGNATURES ON NEXT PAGE]

IN WITNESS WHEREOF, the parties hereto have caused this Amendment to be executed by a duly authorized officer of each of them as of the date first written above.

CITY OF PORTLAND

By: _____
Name: Jon P. Jennings
Title: City Manager

APPROVED AS TO FORM:
_____
CORPORATION COUNSEL'S OFFICE

CPB2 I LLC
By: CPB2 Management LLC, Manager

By: _____
Name: Casey W. Prentice
Title: Manager

MAINE DEPARTMENT OF TRANSPORTATION

By: _____
Name: David Bernhardt
Title: Commissioner

THIRD AMENDMENT TO
EXCHANGE AGREEMENT

THIS THIRD AMENDMENT TO EXCHANGE AGREEMENT (this "Amendment"), dated as of the 4th day of ~~February~~ March, 2019, is made by and between the City of Portland, a body politic and corporate, having an address of 389 Congress Street, Portland, Maine 04101 ("City"), CPB2 I LLC, doing business as CPB2 LLC, a Delaware Limited Liability Company, having a mailing address of Merrill's Wharf, 254 Commercial Street, Suite 118, Portland, Maine 04101 ("CPB2"), and the State of Maine Department of Transportation, an agency of the State of Maine, having a mailing address of 16 State House Station, Augusta, Maine 04333-0016 ("DOT"). All capitalized terms not otherwise defined herein shall have the meaning given them in the Agreement (as such term is defined below).

WHEREAS, the City, CPB2 and DOT entered into a certain Exchange Agreement dated as of June 21, 2017, as amended by a certain First Amendment To Exchange Agreement dated January 2018 and by a certain Second Amendment To Exchange Agreement dated as of August 3, 2018 (collectively, the "Agreement");

WHEREAS, Section 10 of the Agreement currently provides for closing to occur on or before the earlier of the date that is 30 days after the date that the City receives the last of the Thames Street Extension Approvals or December 1, 2018; and

WHEREAS, the City, CPB2, and DOT desire to affirm the continued effectiveness of the Agreement and to extend further the closing date to June 4, 2019;

NOW THEREFORE, in consideration of the mutual covenants and agreements set forth herein below, and for other good and valuable consideration, the parties hereto agree as follows:

1. **Effective Date**. Notwithstanding the date of this Amendment set forth above, the parties hereto agree that this Amendment shall be deemed effective as of December 1, 2018.

2. **Amendment to Agreement.** The first paragraph of Section 10 of the Agreement, as previously amended, is hereby deleted in its entirety and replaced by the following: "Time is of the essence in the performance of this Agreement. The closing shall be held at the offices of CPB2's counsel at a time agreeable to the Parties on June 4, 2019, or such later date approved by the Parties. If the City has not received the last of the Thames Street Extension Approvals, as that term is defined below, as of the closing date, then the Parties may, upon the mutual agreement of the Parties, extend further the closing date to a later date agreed to by the Parties. At the closing:"

3. **Ratification.** The parties hereto hereby reaffirm and ratify the continued effectiveness of the Agreement as modified by this Amendment. The parties agree, affirm, and reaffirm that each and every term, condition, and covenant of the Agreement, shall continue in effect except as specifically modified by this Amendment.

4. **Amendments, Etc.** No amendment, modification, or waiver of any provision of this Amendment, or consent to any departure from the terms of this Amendment by any party hereto shall be effective unless the same shall be in writing and signed by all the parties hereto,

and then such waiver or consent shall be effective only in the specific instance and for the specific purpose for which given.

5. **No Waiver; Remedies.** No failure on the part of any party hereto to exercise, and no delay in exercising, any right hereunder shall operate as a waiver thereof, nor shall any single or partial exercise of any right hereunder preclude any other or further exercise thereof or the exercise of any other right. The remedies herein provided, and provided in the Agreement, are cumulative and not exclusive of any remedies provided by law.

6. **Successors and Assigns.** This Amendment shall be binding upon and inure to the benefit of the parties hereto and their respective successors and assigns.

7. **Severability.** Each provision of this Amendment is intended to be severable and, if any term or provision of this Amendment is determined to be illegal or invalid for any reason whatsoever, such illegality or invalidity shall not affect the validity or legality of the remainder of this Amendment.

8. **Counterparts.** This Amendment may be signed in any number of counterparts, each of which shall be an original and, when taken together, shall constitute one agreement.

[END OF DOCUMENTS; SIGNATURES ON NEXT PAGE]

IN WITNESS WHEREOF, the parties hereto have caused this Amendment to be executed by a duly authorized officer of each of them as of the date first written above.

CITY OF PORTLAND

APPROVED AS TO FORM:
CORPORATION COUNSEL

By:_____
Name: Jon P. Jennings
Title: City Manager

CPB2 I LLC
By: CPB2 Management LLC, Manager

By:_____
Name: Casey W. Prentice
Title: Manager

MAINE DEPARTMENT OF TRANSPORTATION

By:_____
Name: Bruce A. Van Note
Title: Commissioner

IN WITNESS WHEREOF, the parties hereto have caused this Amendment to be executed by a duly authorized officer of each of them as of the date first written above.

CITY OF PORTLAND

By:_____
Name: Jon P. Jennings
Title: City Manager

CPB2 I LLC
By: CPB2 Management LLC, Manager

By:_____
Name: Casey W. Prentice
Title: Manager

MAINE DEPARTMENT OF TRANSPORTATION

By: _____
Name: Bruce A. Van Note
Title: Commissioner

FOURTH AMENDMENT TO EXCHANGE AGREEMENT

THIS FOURTH AMENDMENT TO EXCHANGE AGREEMENT (this "Amendment"), dated as of the 13th day of June, 2019, is made by and between the City of Portland, a body politic and corporate, having an address of 389 Congress Street, Portland, Maine 04101 ("City"), CPB2 I LLC, doing business as CPB2 LLC, a Delaware Limited Liability Company, having a mailing address of Merrill's Wharf, 254 Commercial Street, Suite 118, Portland, Maine 04101 ("CPB2"), and the State of Maine Department of Transportation, an agency of the State of Maine, having a mailing address of 16 State House Station, Augusta, Maine 04333-0016 ("DOT"). All capitalized terms not otherwise defined herein shall have the meaning given them in the Agreement (as such term is defined below).

WHEREAS, the City, CPB2 and DOT entered into a certain Exchange Agreement dated as of June 21, 2017, as amended by a certain First Amendment To Exchange Agreement dated January 2018, by a certain Second Amendment To Exchange Agreement dated as of August 3, 2018 and by a certain Third Amendment To Exchange Agreement dated as of March 4, 2019 (collectively, the "Agreement");

WHEREAS, Section 10 of the Agreement currently provides for closing to occur on June 4, 2019, or such later date approved by the Parties; and

WHEREAS, the City, CPB2, and DOT desire to affirm the continued effectiveness of the Agreement and to extend further the closing date to June 30, 2020;

NOW THEREFORE, in consideration of the mutual covenants and agreements set forth herein below, and for other good and valuable consideration, the parties hereto agree as follows:

1. **Effective Date**. Notwithstanding the date of this Amendment set forth above, the parties hereto agree that this Amendment shall be deemed effective as of June 4, 2019.

2. **Amendment to Agreement**. The first paragraph of Section 10 of the Agreement, as previously amended, is amended further to replace "June 4, 2019" with "June 30, 2020."

3. **Ratification**. The parties hereto hereby reaffirm and ratify the continued effectiveness of the Agreement as modified by this Amendment. The parties agree, affirm, and reaffirm that each and every term, condition, and covenant of the Agreement, shall continue in effect except as specifically modified by this Amendment.

4. **Amendments, Etc**. No amendment, modification, or waiver of any provision of this Amendment, or consent to any departure from the terms of this Amendment by any party hereto shall be effective unless the same shall be in writing and signed by all the parties hereto, and then such waiver or consent shall be effective only in the specific instance and for the specific purpose for which given.

5. **No Waiver; Remedies**. No failure on the part of any party hereto to exercise, and no delay in exercising, any right hereunder shall operate as a waiver thereof, nor shall any

single or partial exercise of any right hereunder preclude any other or further exercise thereof or the exercise of any other right. The remedies herein provided, and provided in the Agreement, are cumulative and not exclusive of any remedies provided by law.

6. **Successors and Assigns.** This Amendment shall be binding upon and inure to the benefit of the parties hereto and their respective successors and assigns.

7. **Severability.** Each provision of this Amendment is intended to be severable and, if any term or provision of this Amendment is determined to be illegal or invalid for any reason whatsoever, such illegality or invalidity shall not affect the validity or legality of the remainder of this Amendment.

8. **Counterparts.** This Amendment may be signed in any number of counterparts, each of which shall be an original and, when taken together, shall constitute one agreement.

[END OF DOCUMENTS; SIGNATURES ON NEXT PAGE]

IN WITNESS WHEREOF, the parties hereto have caused this Amendment to be executed by a duly authorized officer of each of them as of the date first written above.

CITY OF PORTLAND

By: _____
Name: Jon P. Jennings
Title: City Manager

APPROVED AS TO FORM:
_____
CORPORATION COUNSEL'S OFFICE

CPB2 I LLC
By: CPB2 Management LLC, Manager

By: _____
Name: Casey W. Prentice
Title: Manager

MAINE DEPARTMENT OF TRANSPORTATION

By: _____
Name: Bruce A. Van Note
Title: Commissioner

STATE OF MAINE
DEPARTMENT OF TRANSPORTATION

MASTER UTILITY LICENSE

This License, made in duplicate this 2nd day of April, 2019, by and between the **STATE OF MAINE DEPARTMENT OF TRANSPORTATION** (hereinafter called "DEPARTMENT") and **CPB2 1 LLC**, a Delaware Limited Liability Company, with a mailing address of Merrill's Wharf, 254 Commercial Street, Suite 118, Portland, ME 04101 (hereinafter called "LICENSEE").

WITNESSETH:

WHEREAS, LICENSEE herein acknowledges that the term DEPARTMENT, wherever used in this License shall include not only the Maine Department of Transportation, but also any operator licensed by the Department of Transportation to provide rail service over the Berlin Subdivision rail line; and,

WHEREAS, LICENSEE and DEPARTMENT are desirous of entering into a Master Utility License (hereinafter called "License") regarding the construction, installation, maintenance, repair and use of the following underground utilities:

> Transmission and distribution of electrical energy, telecommunications, water, sewer, storm water drain, and diesel and gas fuel lines (hereinafter collectively called "Facilities") under the railroad property and tracks of DEPARTMENT in the City of Portland, Cumberland County, State of Maine;

NOW THEREFORE, for the mutual benefits between the parties, it is hereby understood and agreed as follows:

1. Permit for Facilities

DEPARTMENT agrees that it will permit LICENSEE to construct, install, maintain, repair and use the Facilities at or near railroad milepost 0.35 located under the property and tracks of DEPARTMENT located in the City of Portland, as shown on Attachment A attached hereto and by reference made a part hereof, subject to the terms and conditions hereinafter set out.

2. Specifications

(a) LICENSEE shall, at its sole expense, prior to the installation of any Facilities, submit plans and specifications which shall meet DEPARTMENT'S Standard Specifications (latest edition), as well as the provisions of applicable statutes, orders, rules or regulations of any competent public authority having jurisdiction in the matter.

(b) If, any of DEPARTMENT'S Standard Specifications conflict with any statutes or with any orders, rules, or regulations of any competent public authority having jurisdiction in the matter, then such statutes, orders, rules, or regulations shall prevail, but in all other particulars DEPARTMENT'S Standard Specifications shall govern.

(c) In the event that there is any issue which concerns DEPARTMENT and which is not addressed by the DEPARTMENT'S Standard Specifications or by any statutes, orders, rules, or regulations of any competent public authority having jurisdiction in the matter hereinabove described, the Director of Rail Transportation of Department shall in all such cases have the final decision-making authority as to the acceptability of the installation proposed.

(d) LICENSEE shall, at its sole expense, construct and install, and at all times during the term of this License, maintain Facilities in accordance with the design indicated on the aforesaid plans and specifications.

3. Construction and Maintenance

(a) Should emergency work be necessary, LICENSEE shall make every reasonable effort to notify DEPARTMENT that such work is to be done. In the event of an emergency, contact should be made to the following:

DEPARTMENT:	Director, Rail Transportation (207) 624-3042
LICENSEE:	CPB2 1 LLC (207) 517-1100, ext. 1

(b) LICENSEE, in constructing, installing, maintaining, repairing and using Facilities, shall exercise every reasonable precaution and use all reasonable diligence to avoid interference with the operation of trains, locomotives and maintenance-of-way equipment, or with the use and enjoyment of the property by DEPARTMENT or its independent operators.

(c) LICENSEE shall, except in emergency situations, give not less than ten (10) days written notice to DEPARTMENT of the day and hour it proposes to construct, install, repair, remove or maintain the Facilities. In the event DEPARTMENT considers the time specified in such notice to be unsatisfactory or inconvenient, DEPARTMENT shall, within five (5) days after receipt of such notice, notify LICENSEE to that effect in writing and shall specify a time satisfactory or convenient to DEPARTMENT.

(d) If LICENSEE shall fail to properly maintain Facilities or if Facilities interfere with drainage or other uses of DEPARTMENT**'s** property, then DEPARTMENT may order repairs to the construction at LICENSEE's expense or may (but shall have no obligation to do so) make such repairs to the Facilities of LICENSEE as may be immediately necessary for the safety of trains and property of DEPARTMENT. DEPARTMENT shall promptly notify LICENSEE of the making of such repairs. DEPARTMENT shall not incur any liability as a result of performing such repairs and the provisions of Paragraph 6 shall apply.

(e) LICENSEE agrees to pay to DEPARTMENT the cost of such repairs on or before the fifteenth (15th) day of the month next succeeding that in which a bill therefore is rendered.

4. Use

LICENSEE shall use Facilities solely for purposes of delivery of utilities and services to the adjoining marina currently owned by PF Marina LLC and LICENSEE shall make no change in the Facilities without first obtaining, in writing, the approval of DEPARTMENT. LICENSEE shall be solely responsible for acquiring and complying with federal, state or local permits required for its intended use.

5. Protection of Other Utilities

LICENSEE shall protect power, communication, signal and other utility lines and facilities on, over, or under the property of DEPARTMENT from damage of any kind by or because of the construction, installation, maintenance, repair, relocation, removal or use of said Facilities, and shall construct, install, maintain and use said Facilities in such a manner as will not damage or injuriously affect the use of power, communication, signal or other utility uses of DEPARTMENT or other companies which may have under contract the right to maintain such facilities on the property of DEPARTMENT.

6. Liability and Risk

(a) LICENSEE and DEPARTMENT agree that all cost or expense resulting from any and all loss of life or property, or injury or damage to the person or property of any person, firm or corporation (including the parties hereto and their respective officers, agents and employees), and any and all claims, demands or actions for such loss, injury or damage, caused by or arising out of the presence or use, or the construction, installation, maintenance, repair, relocation or removal of Facilities, shall be borne by LICENSEE. LICENSEE shall also bear the cost of inspections performed by DEPARTMENT to determine whether LICENSEE is in compliance with this License.

(b) LICENSEE assumes all risk of loss or damage to LICENSEE**'s** property, inclusive of free or unused materials, supplies and equipment, however caused, resulting directly or indirectly, by reason of the construction, installation, maintenance, repair, relocation, use, existence or removal of Facilities, and hereby releases DEPARTMENT from any and all liability on account of such loss or damage, whether or not the negligence of DEPARTMENT caused thereto in whole or in part.

7. Insurance

LICENSEE shall at all times carry personal property and equipment insurance sufficient to cover the value of all of LICENSEE'S personal property and equipment on the DEPARTMENT'S property. LICENSEE shall carry commercial general liability insurance coverage in an amount not less than $2,000,000.00 for both personal injury and property damage occurring as a result of

LICENSEE'S activities and presence on, and its use, alteration and occupation of any of the DEPARTMENT"S property. This coverage shall apply to any and all claims or causes of action resulting in death, bodily injury or property damage and shall be applicable to all such claims brought by any person or arising out of any single occurrence or in the aggregate. LICENSEE shall provide proof of the above-described insurances upon request by the DEPARTMENT. Failure to maintain this required insurance coverage shall result in the automatic termination of this License.

8. Changes or Relocation

LICENSEE shall, at its sole expense, within ninety (90) days after receipt of written notice from DEPARTMENT, make such changes in the Facilities, including relocation, as may be required by DEPARTMENT, if such changes or relocation shall, in the judgment of DEPARTMENT, be needed for the better development, or use of the property of DEPARTMENT, or if such changes or relocation shall, in the judgment of DEPARTMENT, be needed to protect its requirements, or contractual obligations, or if such change or relocation is required, directly or indirectly by statute or by any order of any competent public authority having jurisdiction in the matter. Provided, however, that the term "contractual obligation" used in this paragraph shall not be construed as including obligations similar hereto, entered into subsequent to the date of this License.

9. Discontinuance

LICENSEE shall, at its sole expense, upon termination of this License, or upon the abandonment or discontinuance of use of the Facilities, promptly remove its property from the premises of DEPARTMENT and restore such premises disturbed by the construction to a condition satisfactory to DEPARTMENT.

10. Cost of Changes

If LICENSEE fails to change or relocate the Facilities within ninety (90) days after the expiration of notice given as provided in Paragraph 8 hereof, or to remove its property as provided in Paragraph 9 hereof, DEPARTMENT may, without further notice, in case of necessary alteration, and in the case of apparent abandonment, after written notice sent to LICENSEE and the expiration of five (5) days after such notice is sent, remove, change or relocate the Facilities and render bills for the cost of such removal, change or relocation to LICENSEE which bills LICENSEE agrees to pay on or before the fifteenth (15th) of the month next succeeding that in which such bill is rendered.

11. Taxes

LICENSEE shall pay all taxes assessed upon the Facilities, if assessed or on account of the existence or use of the Facilities, and shall indemnify DEPARTMENT against the payment of such taxes.

12. Waiver

It is expressly understood and agreed that any waiver on the part of DEPARTMENT of any term, provision or covenant of this License shall not constitute a precedent, nor bind DEPARTMENT to a waiver of any similar or succeeding breach of same or any other terms, provisions or covenants of this License.

13. Execution Official Act Only

The individuals executing this License on behalf of DEPARTMENT do so only in their official capacity and none of the covenants herein contained are to be held or construed as their individual acts, or acts for which they may be individually liable in any way. In exercising the rights granted hereunder, LICENSEE shall not be deemed to be acting as an officer, agent, or employee of the State of Maine.

14. No Warranty of Title

No warranty of title to any property is given hereunder, and the permission herein given to LICENSEE is subject to all encumbrances, conditions and reservations upon or under which DEPARTMENT holds its property. The rights of LICENSEE are limited solely to the License herein granted and LICENSEE shall not acquire by virtue of this License or otherwise any easement or other greater interest in the property of DEPARTMENT.

15. Fees and Rental

(a) LICENSEE shall pay to DEPARTMENT an administrative fee of One Hundred Dollars ($100.00) for expenses in connection with the preparation and execution of this License. LICENSEE shall further pay to DEPARTMENT a fee of One Hundred Dollars ($100.00) for expenses incurred in connection with the examination of each set of plans and specifications submitted for any *new* Facilities constructed after the date of this License.

(b) LICENSEE shall pay to DEPARTMENT for the privileges herein granted and for inspection expenses the sum of; $25 per annum for water line, $25 per annum for Drainage pipe 12 inches or less in diameter, $50 per annum for Drainage pipe greater than 12 inches in diameter, $50 per annum for manhole or catch basin, $100 per annum for each fiber optic crossing, $50.00 per annum for each electric wire crossing up to 7.2 KV, $75.00 per annum for each electric wire crossing from 7.2 KV up to 34.5 KV, $100.00 per annum for each electric wire crossing from 34.5 KV up to 115 KV, $150.00 per annum for each electric wire crossing from 115 KV up to 345 KV, $50/inch for pipelines carrying flammable substances 12 inches or less in diameter per annum, $75/inch for pipelines carrying flammable substances greater than 12 inches in diameter per annum and $1.00 per foot for longitudinal lines (aerial or underground) per annum. The annual charges are to be payable in advance each year to "Treasurer, State of Maine." on the date of this License and on each anniversary date. The current sites and charges for each underground utility are delineated in Attachment B, attached hereto and by reference made a part hereof.

(c) Department reserves the right to review the rental rate at each five-year (5) anniversary date of this License. Written notice will be provided to Licensee of any rate adjustment at least thirty (30) days before the effective date of the rent increase.

(d) Attachment B shall be updated by the deletion or addition of any Facilities whenever applicable, but shall at all times reflect the locations of all such Facilities in existence, and no Facility shall be deemed valid unless it appears on an amended Attachment B.

16. Notification

All communications and notices required or permitted under this License shall be in writing and shall be deemed sufficiently served if served in hand or by certified mail addressed as follows or such other address as each party may designate in writing from time to time:

TO DEPARTMENT:

State of Maine
Department of Transportation
#16 State House Station
Augusta, Maine 04333-0016

Attention: Director, Rail Program

TO LICENSEE:

CPB2 1 LLC
Merrill's Wharf
254 Commercial Street, Ste 118
Portland, Maine 04101

Primary Contact: Casey W. Prentice @
cwp@portlandforeside.com

17. Subordinate to Railroad Operations

The Utility Crossing rights are expressly subordinate to all rights of the DEPARTMENT, and of the Trust for the Preservation of Maine Industrial History and Technology (the "Narrow Gauge Railroad") pursuant to its lease with the DEPARTMENT, and subject to termination at the DEPARTMENT'S discretion if the DEPARTMENT determines that the Utility Crossing Rights interfere in any way with the safe and efficient operation of any rail service performed thereon. In such instance, the DEPARTMENT will provide the LICENSEE with at least ninety (90) days' prior written notice of termination unless such termination is required because of safety concerns, in which case, the DEPARTMENT reserves the right to terminate the License immediately, or with a notice period shorter than ninety (90) days at the DEPARTMENT'S sole discretion.

18. Termination

Except as provided in Paragraph 17 above and/or in the event of public safety concerns, the LICENSEE agrees that any and all rights conveyed by this License may be terminated and revoked by the DEPARTMENT if the DEPARTMENT in its sole discretion determines: a) that the rail line is needed for transportation purposes; b) that the use of the rail line as permitted by this License impairs or compromises the public safety; or c) that the LICENSEE has breached the terms and conditions of this License. In the event of such termination, unless the termination is associated with a public safety issue, the DEPARTMENT shall give the LICENSEE written notice, which shall provide that the LICENSEE has ninety (90) days to discontinue its use of the rail line and remove any improvement therefrom if so directed by the DEPARTMENT at the LICENSEE'S sole expense. The LICENSEE shall not be entitled to compensation in the event the DEPARTMENT terminates this License for any reason.

19. Successors

This License shall inure to the benefit of and be binding upon the parties hereto, their successors or assigns, provided that LICENSEE shall not transfer, assign or permit the use of the Facilities hereby granted by any person or corporation (other than PF Marina LLC, or its successors or assigns) without the prior consent and agreement, in writing, of the DEPARTMENT.

20. Survival

Any covenants and representations contained herein, and any obligations which by their nature can be or are to be performed after the termination of this License, shall survive such termination.

IN WITNESS WHEREOF, the parties have executed this License on the date first written above.

LICENSOR:

STATE OF MAINE DEPARTMENT
OF TRANSPORTATION

Witness

By: _____
Nathan Moulton, Director
Office of Freight and Business Services

LICENSEE:

CPB2 1 LLC

Witness

By: _____
Casey W. Prentice
CPB2 Management LLC, Manager

ATTACHMENT A

Facilities Map

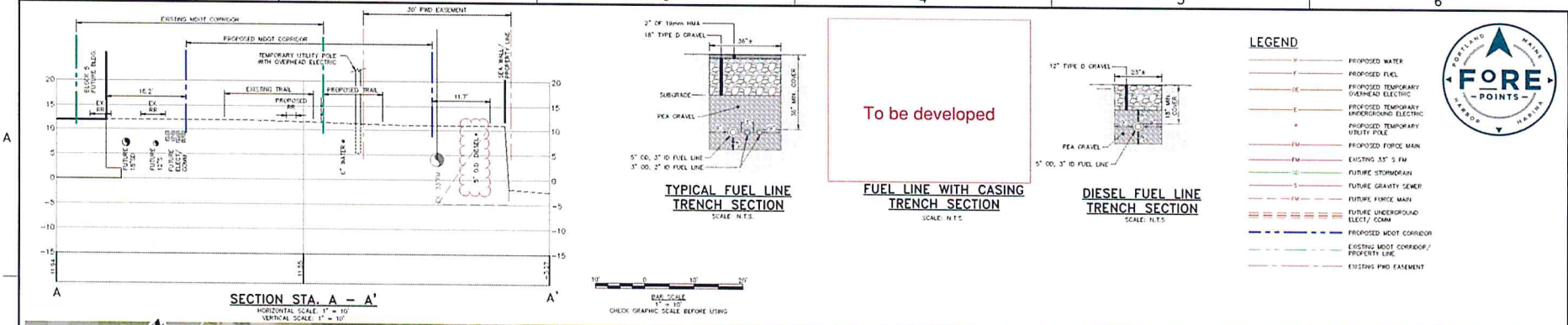

SECTION STA. A – A'

HORIZONTAL SCALE: 1" = 10'
VERTICAL SCALE: 1" = 10'

TYPICAL FUEL LINE TRENCH SECTION

SCALE: N.T.S.

To be developed

FUEL LINE WITH CASING TRENCH SECTION

SCALE: N.T.S.

DIESEL FUEL LINE TRENCH SECTION

SCALE: N.T.S.

BAR SCALE
1" = 10'
CHECK GRAPHIC SCALE BEFORE USING

LEGEND

- PROPOSED WATER
- PROPOSED FUEL
- PROPOSED TEMPORARY OVERHEAD ELECTRIC
- PROPOSED TEMPORARY UNDERGROUND ELECTRIC
- PROPOSED TEMPORARY UTILITY POLE
- PROPOSED FORCE MAIN
- EXISTING 33" S FM
- FUTURE STORMDRAIN
- FUTURE GRAVITY SEWER
- FUTURE FORCE MAIN
- FUTURE UNDERGROUND ELECT/ COMM
- PROPOSED MDOT CORRIDOR
- EXISTING MDOT CORRIDOR/ PROPERTY LINE
- EXISTING PRO EASEMENT

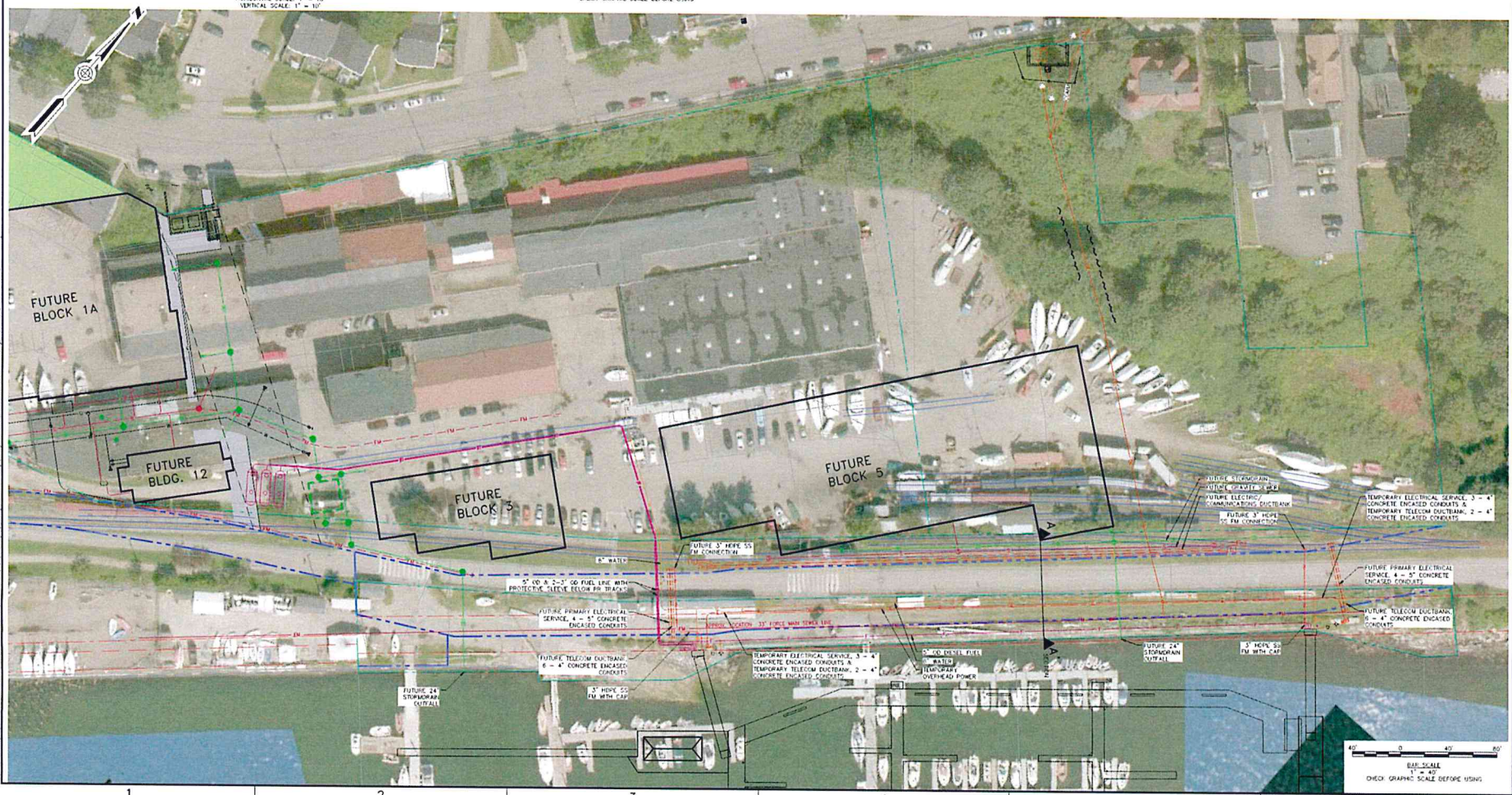

BAR SCALE
1" = 40'
CHECK GRAPHIC SCALE BEFORE USING

FORE POINTS

41 Hutchins Drive
Portland, Maine 04102
800.426.4262 | www.woodardcurran.com

COMMITMENT & INTEGRITY DRIVE RESULTS

THIS DOCUMENT IS THE PROPERTY OF WOODARD & CURRAN, INC. AND ITS CLIENT AND IS NOT TO BE USED FOR ANY PURPOSE OR MODIFICATION WITHOUT WRITTEN PERMISSION OF WOODARD & CURRAN, INC.

REV	DESCRIPTION	DATE
1	REVISIONS PER CITY COMMENTS	11/26/18

DESIGNED BY: KJT
DRAWN BY: BCM
CHECKED BY: ECC
CERTIFICATION BLOCK

MARINA UTILITY FIGURE

PF MARINA, LLC
PORTLAND, MAINE

FORE POINTS
MARINA SITE PLAN APPLICATION

JOB NO.: 227007.50
DATE: JANUARY 15, 2019
SCALE: AS NOTED
SHEET: 1 OF 1

FIG. 1

24x36 SHEET

ATTACHMENT B

Underground Utilities

Milepost	Stationing	Railroad Val Plan	Remarks	Annual Fee
.35		V-26, Sheet 24	Underground 24" storm drain pipe (eastern gangway)	$50
.35		V-26, Sheet 24	Underground 24" storm drain pipe (western gangway)	$50
.35		V-26, Sheet 24	Underground 6" water line to run longitudinally within the ROW for 545'.	$545
.35		V-26, Sheet 24	Underground 5" diesel fuel line, double wall pipe (monitored and alarmed); contained within a single protective sleeve under RR tracks	$250
.35		V-26, Sheet 24	Underground 3" Diesel fuel line (monitored and alarmed) contained within 2 single protective sleeves under RR tracks	$150
.35		V-26, Sheet 24	Underground 3" gasoline double wall fuel lines (monitored and alarmed) contained within a single protective sleeve under RR tracks	$150
.35		V-26, Sheet 24	Underground 12.47 KV Primary Electrical Service; four 5" concrete encased conduits located within an electrical duct bank (eastern gangway)	$75
.35		V-26, Sheet 24	Underground 12.47 KV Primary Electrical Service; four 5" concrete encased conduits located within an electrical duct bank (western gangway)	$75
.35		V-26, Sheet 24	Underground Telecom service six 4"concrete encased conduits located within a Telecom duct bank	$100
.35		V-26, Sheet 24	Underground Telecom service six 4" concrete encased conduits located within a Telecom duct bank	$100
.35		V-26, Sheet 24	3" HDPC 55 FM with cap (eastern gangway)	$25
.35		V-26, Sheet 24	3" HDPC 55 FM with cap (western gangway)	$25

TOTAL ANNUAL FEE: $1595

PUBLIC ACCESS EASEMENT

KNOW ALL PERSONS BY THESE PRESENTS, that CPB2 I LLC, a Delaware limited liability company, with a place of business in Portland, Maine and mailing address of Merrill's Wharf, 254 Commercial Street, Suite, 118, Portland, Maine 04101 (the "Grantor"), FOR CONSIDERATION PAID, hereby GRANTS to the CITY OF PORTLAND, a Maine body corporate and politic, with a mailing address of City Hall, 389 Congress Street, Portland, Maine 04101 (the "Grantee" or the "City"), a fifty-foot wide public access easement (the "Access Easement") for the purpose described below, across a portion of Grantor's property in Portland, Maine, running from Fore Street to the southerly boundary of Grantor's property, in the general location depicted on the drawing attached hereto as Exhibit A and made a part hereof (the "Easement Area"), subject to the terms set forth below. The precise location of the Easement Area shall be flexible prior to final design and construction of permanent improvements to the Easement Area. When the final design of the Easement Area has been completed and prior to construction of said improvements, the Easement Area shall be more particularly described by metes and bounds in an Addendum to this Access Easement, signed by both Parties and recorded in the Cumberland County Registry of Deeds.

The purpose of the Access Easement granted herein is to provide physical and visual public access to the waterfront for pedestrians within the Easement Area, which access shall include an ADA compliant access way for pedestrians, including but not limited to wheelchair access on the southern end of the Easement Area. Additional accommodations may be provided if and as required by applicable state or federal law, including the ADA.

The Easement Area shall be subject to such rules or ordinances that Grantee may adopt from time to time in the interests of public safety. Wheelchairs and emergency vehicles as well as snow removal equipment shall be permitted in accordance with applicable federal and/or state laws regulating accessibility for such devices, vehicles or equipment. Maintenance, repair and snow removal responsibilities within the Easement Area shall belong solely to Grantor, its successors and assigns; however, Grantee shall have the right, but not the obligation, to maintain or repair the Easement Area, or to remove snow therefrom, when Grantee, in its sole discretion, deems such maintenance, repair or snow removal necessary to ensure public safety and Grantor has failed to perform the same within a reasonable time after notice from Grantee.

Grantor agrees not to use or permit any use, condition or state of disrepair that would be contrary to or otherwise unreasonably interfere with the use of the Easement Area by pedestrians in the manner contemplated herein. Provided, however, Grantor may temporarily close all or a portion of the Easement Area during construction, maintenance or repair activities if required to safeguard public safety. Grantor shall promptly correct any condition and complete any maintenance or construction activities necessitating such closure in order to minimize the duration of the closure or restriction of public access to the Easement Area. Any closures that prevent public access from Fore Street through to the waterfront shall be pursuant to and in accordance with an Access Easement Closure plan filed with and approved in advance by the City of Portland's Planning Authority.

Nothing herein contained shall be deemed to be a gift or dedication of the fee interest in the Easement Area or any portion thereof to Grantee or to the general public.

The Easement Area is and shall remain private property, and Grantor hereby expressly reserves and retains for itself and for any subsequent owner of the Easement Area, all rights of ownership to the extent the exercise thereof does not unreasonably limit or unreasonably interfere with the use of the Easement Area by pedestrians; such rights include, without limitation, (i) the right to adopt reasonable rules and regulations governing the use of the Easement Area, (ii) the right to use, or to grant to others the right to use, the surface and subsurface of and air space above the Easement Area for any use or purpose (including, without limitation, the right to install, inspect, operate, maintain, repair, replace and remove electric lines, gas lines, underground fuel tanks, telecommunication lines (such as telephone, cable and internet lines), water lines, storm sewers, sanitary sewers, catch basins, manholes, clean-outs, curbing, driveways, surface parking areas, sidewalks, landscaping, benches, information kiosks, light pole bases, lighting fixtures, retaining walls, monument signs, fountains, statues, art pieces and the like, and (iii) the right to make changes, alterations and/or improvements to the Easement Area from time to time.

This easement is given for recreational use and the Grantor and Grantee claim the rights and protections against liability in accordance with Title 14 MRS §159-A to the maximum extent permitted by law.

TO HAVE AND TO HOLD the aforegranted and bargained public access easement, with all privileges and appurtenances thereof, to the Grantee, its successors and assigns, to its and their use and behoof, forever.

IN WITNESS WHEREOF, the Grantor has caused this instrument to be executed by Casey Prentice, its Manager thereunto duly authorized, this 27 day of March, 2019.

CPB2 I LLC
By: CPB2 Management LLC, Manager

By: _____
Name: Casey Prentice
Title: Manager

STATE OF MAINE
CUMBERLAND, ss

March 27, 2019

Personally appeared the above-named Casey Prentice, for CPB2 I LLC as aforesaid, and acknowledged the foregoing instrument to be his/her free act and deed in his/her said capacity and the free act and deed of said limited liability company.

Before me,
Janet L. Davis
Notary Public/Attorney at Law

Print name: Janet L. Davis SEAL
My commission expires: 01-18-2021

JANET L. DAVIS
NOTARY PUBLIC
State of Maine
My Commission Expires
January 18, 2021

GRANTEE ACCEPTANCE:

The City of Portland does hereby accept the foregoing Public Access Easement, by and through City Manager Jon Jennings.

CITY OF PORTLAND

By: Jon Jennings
Its: City Manager

STATE OF MAINE
CUMBERLAND, ss

March 28th, 2019

Personally appeared the above-named Jon Jennings, for the City of Portland as aforesaid, and acknowledged the foregoing instrument to be his free act and deed in his said capacity and the free act and deed of said City of Portland.

Before me,

Notary Public/Attorney at Law

Print name: Deivy Periana
My commission expires: April 9, 2021

DEIVY PERIANA
NOTARY PUBLIC
CUMBERLAND COUNTY
MAINE
MY COMMISSION EXPIRES APRIL 9, 2021

Exhibit A

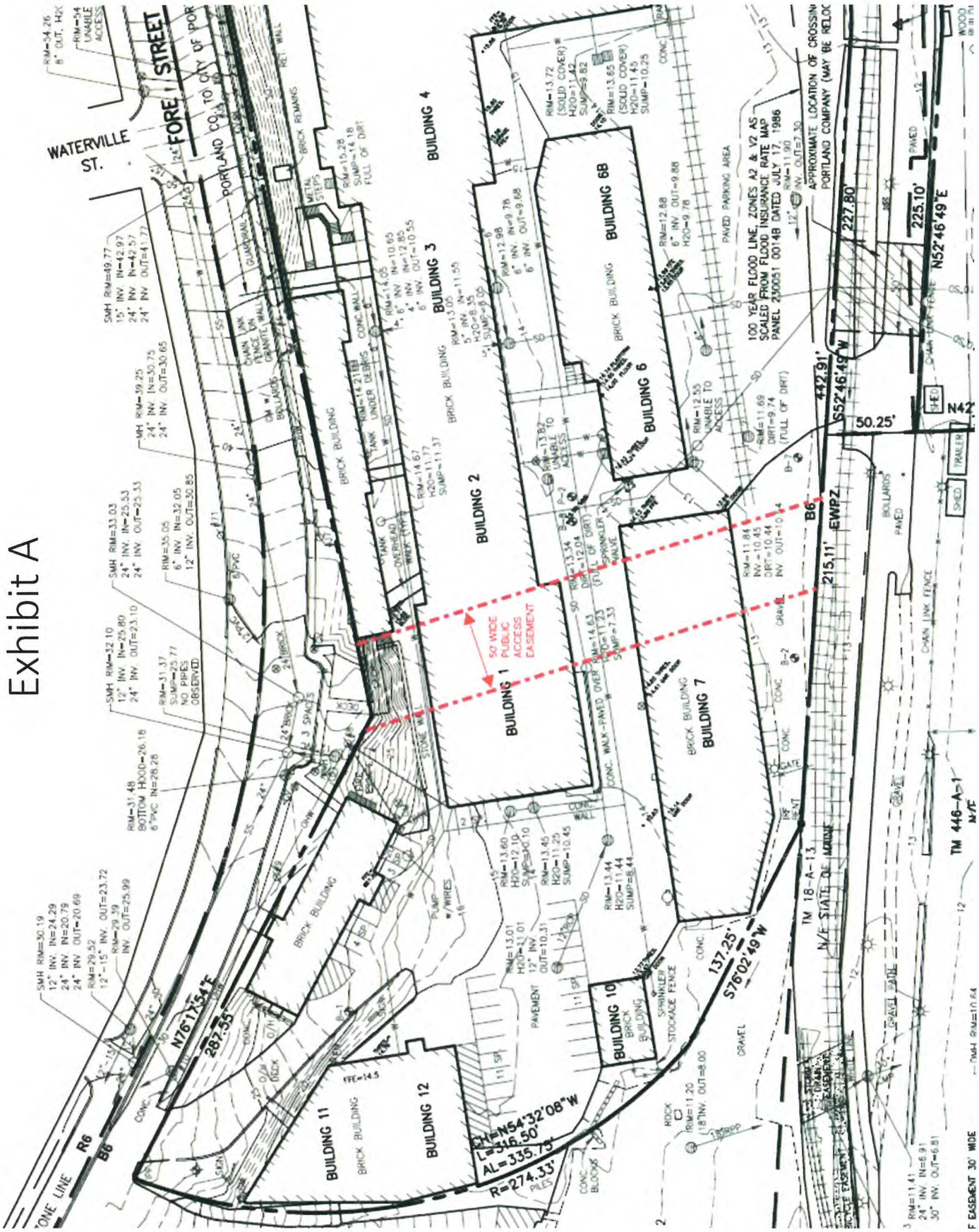

Received
Recorded Register of Deeds
Apr 05,2019 03:47:04P
Cumberland County
Nancy A. Lane

3. FINANCIAL CAPACITY

3.1 FINANCING

A copy of a letter verifying the Applicant's financial capacity to undertake the project is attached to this Section.

3.2 CERTIFICATE OF GOOD STANDING

A copy of the Secretary of State's Certificate of Good Standing for Portland Foreside Management Company, LLC (the Applicant) is attached to this Section.

3.3 LIST OF ATTACHMENTS

- Financial Capacity Letter; and
- Certificate of Good Standing.

ACKMAN | ZIFF

REAL ESTATE CAPITAL ADVISORS

October 2, 2019

Ms. Christine Grimando,
AICP Planning Director
Planning & Urban Development
Department 389 Congress Street 4th
Floor
Portland, ME 04101

Re: 58 Fore Street Phase I Development - Financial Capacity to Serve

Dear Ms. Grimando,

It's my pleasure to provide this memorandum confirming Ackman-Ziff's ("AZ") relationship with Portland Foreside Development Company (PFDC) and its managing partners Casey Prentice and Kevin Costello. We believe that the management team possess the relevant knowledge and experience to design, coordinate and construct a multi-phased development plan – Phase 1 being Block 1A, building 12, Block 2 and Block 4 as described by the approved Master Development Plan. The managing partners have proven their development expertise with numerous successful Portland projects.

The management team possesses relationships with capital partners, banks, and financial institutions demonstrating the financial capacity necessary to obtain project financing for Phase 1. In our role as financial intermediary for the project, AZ will work with PFDC to arrange the appropriate capitalization for each phase of the development.

Ackman-Ziff Real Estate Group is the industry's preeminent boutique real estate capital advisory firm. In business for over 90 years, the privately held company offers a wide variety of cutting-edge commercial real estate capital markets solutions, including debt and mezzanine financing, preferred and joint venture equity, sponsor equity, and investment sales.

AZ looks forward to working with PFDC on the financing aspects of the project as it moves forward from the Master Development Plan submission to phased vertical developments.

AZ's unique knowledge, broad capital markets relationships and national platform enable the firm to be in the position to arrange financing for a wide range of commercial real estate projects and we're proud of our history of performance spanning more than 90 years.

Thank you and best regards,

Jason Krane
Principal

MAINE
Department of the Secretary of State
Bureau of Corporations, Elections and Commissions

Corporate Name Search

Information Summary

Subscriber activity report

This record contains information from the CEC database and is accurate as of: Wed Oct 02 2019 11:14:12. Please print or save for your records.

Legal Name	Charter Number	Filing Type	Status
PORTLAND FORESIDE MANAGEMENT COMPANY LLC	20175674DC	LIMITED LIABILITY COMPANY (DOMESTIC)	GOOD STANDING

Filing Date	Expiration Date	Jurisdiction
05/15/2017	N/A	MAINE

Other Names **(A=Assumed ; F=Former)**

NONE

Clerk/Registered Agent

HELEN STERLING COBURN, ESQ.
BERNSTEIN SHUR
PO BOX 9729
PORTLAND, ME 04104 5029

Back to previous screen | New Search

Click on a link to obtain additional information.

List of Filings	View list of filings	
Obtain additional information:		
Additional Addresses	Plain Copy	Certified copy
Certificate of Existence (more info)	Short Form without amendments ($30.00)	Long Form with amendments ($30.00)

You will need Adobe Acrobat version 3.0 or higher in order to view PDF files.
If you encounter problems, visit the troubleshooting page.

Get Acrobat Reader

If you encounter technical difficulties while using these services, please contact the Webmaster. If you are unable to find the information you need through the resources provided on this web site, please contact the Bureau's Reporting and Information Section at 207-624-7752 or e-mail or visit our Feedback page.

© Department of the Secretary of State

4. TECHNICAL ABILITY

On behalf of the Applicant, Woodard & Curran is preparing this application for the proposed development. Woodard & Curran has extensive experience with design for site development projects and specifically on the peninsula within the City of Portland. Woodard & Curran, a 1,000-person Portland-based firm, has provided engineering services to the public and private sector for over 40 years, including permitting, civil/site engineering, stormwater and construction management services. The project is also supported by a design team including Perkins+Will and Bruner/Cott for architecture and Michael Boucher Landscape Architecture (MBLA) for landscape architecture.

Perkins+Will architects is a firm consisting of twenty-four domestic and international offices with a depth of technical and management skill employed to execute projects of great complexity. Perkins+Will maintains a full-time QA/QC leader in each office to provide ongoing quality assurance for projects. These experts are guided by a national project delivery system that has resulted from the best practices from around the firm.

Bruner/Cott is a 35-person historic preservation architecture firm located in Boston, Massachusetts. Their leadership team brings a broad, integrated perspective to design, giving depth to each of their practice areas. Bruner/Cott's work has been recognized for award-winning design from preservation to adaptive reuse and new construction, with a focus on educational and cultural institutions. Bruner/Cott partners with private developers for residential and commercial buildings. Bruner/Cott is known for creativity in inventing new solutions to complex programs and as design leaders for historic renewal and contemporary design in the context of urban revitalization and institutional re-invention.

MBLA is a professional design firm located in Freeport, Maine. MBLA practices nationally and internationally, and over the past twenty-five years, the office has collaborated on diverse and notable projects, located in a wide range of settings and climates and across the state of Maine. MBLA projects range in scale and complexity including plazas, courtyards, university building projects, private school facilities, master plans, museums, churches, resorts, parks, and residential landscape projects. Many of MBLA's design projects have focused on creating places for people to gather while addressing issues of circulation, security, and programming.

Copies of resumes can be provided upon request.

5. NOISE

The noise impact from the proposed development will be minor. The primary source of noise from the proposed project will be the result of construction. Construction activities will be limited to the hours permitting by the City. HVAC and primary mechanical equipment will be located and screened to mitigate noise impacts. Noise associated with the proposed development will not exceed regulated levels and is not anticipated to negatively impact surrounding development in its urban setting.

6. VISUAL QUALITY & SCENIC CHARACTER

As further described in the City of Portland Site Plan Application for the proposed development, the architecture and landscaping have been designed to be consistent with the scenic and historic character of the surrounding urban waterfront area. The Site Plan Application includes renderings showing how view corridors will be preserved. A Certificate of Appropriateness will also be obtained from the City of Portland Historic Preservation Board. It is not anticipated that the proposed development will result in any negative visual impacts.

7. WILDLIFE & FISHERIES

The Site has been previously developed and there are no known areas of significant natural features, including areas of significant wildlife habitats or wetlands. The attached Official Species List identifies the northern long-eared bat, which has been listed as a Federally Threatened Species, in association with the project area; however, there are no critical habitat areas located within the project area. Based on US Fish & Wildlife information, the northern long-eared bat typically lives in caves during the winter months and in trees larger than three inches in diameter during the summer, with migration between these two habitats in the spring in the fall. Tree-clearing for this project will be minimal.

A letter has been sent to the Maine Department of Inland Fisheries and Wildlife (MDIFW) requesting information regarding any known threatened or endangered species or critical habitat relative to the project area; a copy of this letter is attached to this Section for your reference. A copy of the MDIFW response can be provided upon receipt. It is not anticipated that the proposed development will have a negative impact on the northern long-eared bat.

7.1 LIST OF ATTACHMENTS

- Official Species List; and
- MDIFW Environmental Review Request Letter.

United States Department of the Interior

FISH AND WILDLIFE SERVICE
Maine Ecological Services Field Office
P. O. Box A
East Orland, ME 04431
Phone: (207) 469-7300 Fax: (207) 902-1588
http://www.fws.gov/mainefieldoffice/index.html

In Reply Refer To:
Consultation Code: 05E1ME00-2019-SLI-1102
Event Code: 05E1ME00-2019-E-02986
Project Name: Portland Foreside Development

August 29, 2019

Subject: List of threatened and endangered species that may occur in your proposed project location, and/or may be affected by your proposed project

To Whom It May Concern:

The enclosed species list identifies the threatened, endangered, candidate, and proposed species and designated or proposed critical habitat that may occur within the boundary of your proposed project or may be affected by your proposed project. This species list fulfills the requirements of the U.S. Fish and Wildlife Service (Service) under section 7(c) of the Endangered Species Act (Act) of 1973, as amended (16 U.S.C. 1531 et seq.).

New information based on updated surveys, changes in the abundance and distribution of species, changed habitat conditions, or other factors could change this list. Please feel free to contact us if you need more current information or assistance regarding the potential impacts to federally proposed, listed, and candidate species and federally designated and proposed critical habitat. Please note that under 50 CFR 402.12(e) of the regulations implementing section 7 of the Act, the accuracy of this species list should be verified after 90 days. This verification can be completed formally or informally as desired. The Service recommends that verification be completed by visiting the ECOS-IPaC Web site at regular intervals during project planning and implementation for updates to species lists and information. An updated list may be requested through the ECOS-IPaC system by completing the same process used to receive the enclosed list.

The purpose of the Act is to provide a means whereby threatened and endangered species and the ecosystems upon which they depend may be conserved. Under sections 7(a)(1) and 7(a)(2) of the Act and its implementing regulations (50 CFR 402 et seq.), Federal agencies are required to utilize their authorities to carry out programs for the conservation of threatened and endangered species and to determine whether projects may affect threatened and endangered species and/or designated critical habitat.

A Biological Assessment is required for construction projects (or other undertakings having similar physical impacts) that are major Federal actions significantly affecting the quality of the human environment as defined in the National Environmental Policy Act (42 U.S.C. 4332(2)(c)). For projects other than major construction activities, the Service suggests that a biological evaluation similar to a Biological Assessment be prepared to determine whether the project may affect listed or proposed species and designated or proposed critical habitat. Recommended contents of a Biological Assessment are described at 50 CFR 402.12.

If a Federal agency determines, based on the Biological Assessment or biological evaluation, that listed species or designated critical habitat may be affected by the proposed project, the agency is required to consult with the Service pursuant to 50 CFR 402. In addition, the Service recommends that candidate species, proposed species and proposed critical habitat be addressed within the consultation. More information on the regulations and procedures for section 7 consultation, including the role of permit or license applicants, can be found in the Endangered Species Consultation Handbook at: http://www.fws.gov/endangered/esa-library/pdf/TOC-GLOS.PDF

This species list also identifies candidate species under review for listing and those species that the Service considers species of concern. Candidate species have no protection under the Act but are included for consideration because they could be listed prior to completion of your project. Species of concern are those taxa whose conservation status is of concern to the Service (i.e., species previously known as Category 2 candidates), but for which further information is needed.

If a proposed project may affect only candidate species or species of concern, you are not required to prepare a Biological Assessment or biological evaluation or to consult with the Service. However, the Service recommends minimizing effects to these species to prevent future conflicts. Therefore, if early evaluation indicates that a project will affect a candidate species or species of concern, you may wish to request technical assistance from this office to identify appropriate minimization measures.

Please be aware that bald and golden eagles are not protected under the Endangered Species Act but are protected under the Bald and Golden Eagle Protection Act (16 U.S.C. 668 et seq.). Projects affecting these species may require development of an eagle conservation plan: http://www.fws.gov/windenergy/eagle_guidance.html Information on the location of bald eagle nests in Maine can be found on the Maine Field Office Web site: http://www.fws.gov/mainefieldoffice/Project%20review4.html

Additionally, wind energy projects should follow the wind energy guidelines: http://www.fws.gov/windenergy/ for minimizing impacts to migratory birds and bats. Projects may require development of an avian and bat protection plan.

Migratory birds are also a Service trust resource. Under the Migratory Bird Treaty Act, construction activities in grassland, wetland, stream, woodland, and other habitats that would result in the take of migratory birds, eggs, young, or active nests should be avoided. Guidance for minimizing impacts to migratory birds for projects including communications towers (e.g.,

cellular, digital television, radio, and emergency broadcast) can be found at: http://www.fws.gov/migratorybirds/CurrentBirdIssues/Hazards/towers/towers.htm and at: http://www.towerkill.com; and at: http://www.fws.gov/migratorybirds/CurrentBirdIssues/Hazards/towers/comtow.html

We appreciate your concern for threatened and endangered species. The Service encourages Federal agencies to include conservation of threatened and endangered species into their project planning to further the purposes of the Act. Please include the Consultation Tracking Number in the header of this letter with any request for consultation or correspondence about your project that you submit to our office.

Attachment(s):

- Official Species List

Official Species List

This list is provided pursuant to Section 7 of the Endangered Species Act, and fulfills the requirement for Federal agencies to "request of the Secretary of the Interior information whether any species which is listed or proposed to be listed may be present in the area of a proposed action".

This species list is provided by:

Maine Ecological Services Field Office
P. O. Box A
East Orland, ME 04431
(207) 469-7300

Project Summary

Consultation Code: 05E1ME00-2019-SLI-1102

Event Code: 05E1ME00-2019-E-02986

Project Name: Portland Foreside Development

Project Type: DEVELOPMENT

Project Description: 58 Fore Street

Project Location:

Approximate location of the project can be viewed in Google Maps: https://www.google.com/maps/place/43.66255329831206N70.24375990552419W



Counties: Cumberland, ME

Endangered Species Act Species

There is a total of 1 threatened, endangered, or candidate species on this species list.

Species on this list should be considered in an effects analysis for your project and could include species that exist in another geographic area. For example, certain fish may appear on the species list because a project could affect downstream species.

IPaC does not display listed species or critical habitats under the sole jurisdiction of NOAA Fisheries[1], as USFWS does not have the authority to speak on behalf of NOAA and the Department of Commerce.

See the "Critical habitats" section below for those critical habitats that lie wholly or partially within your project area under this office's jurisdiction. Please contact the designated FWS office if you have questions.

---

1. NOAA Fisheries, also known as the National Marine Fisheries Service (NMFS), is an office of the National Oceanic and Atmospheric Administration within the Department of Commerce.

Mammals

NAME	STATUS
Northern Long-eared Bat *Myotis septentrionalis* No critical habitat has been designated for this species. Species profile: https://ecos.fws.gov/ecp/species/9045	Threatened

Critical habitats

THERE ARE NO CRITICAL HABITATS WITHIN YOUR PROJECT AREA UNDER THIS OFFICE'S JURISDICTION.

8. HISTORIC SITES

A letter has been sent to the Maine Historic Preservation Commission (MHPC) requesting a review of the project area relative to historic properties; a copy of this letter is attached to this Section for your reference. A copy of the MHPC response can be provided upon receipt. Portions of the site are also being reviewed by the City of Portland's Historic Preservation Board. A Certificate of Appropriateness has been received for Building 12, and the review process is underway for the Block 2 historic core of buildings and will soon be started for Buildings 1A and 4.

8.1 LIST OF ATTACHMENTS

- MHPC Project Review Request Letter.

9. UNUSUAL NATURAL AREAS

The Site has been previously developed and there are no known unusual natural areas. A letter has been sent to the Maine Natural Areas Program (MNAP) requesting a review of the Site relative to rare and exemplary botanical features; a copy of this letter is attached to this Section for your reference. A copy of the MNAP response can be provided upon receipt.

9.1 LIST OF ATTACHMENTS

- MNAP Site Review Request Letter.

10. BUFFERS

The Site has been previously developed. There are no existing or proposed buffers. This Section is not applicable.

11. SOILS

Copies of the United States Department of Agriculture Natural Resources Conservation Service Web Soil Survey and the Geotechnical Report prepared for the Site are attached to this Section for your reference. Environmental assessments of the Site have been conducted and the Owner is a participant in the Maine Department of Environmental Protection Voluntary Response Action Program (VRAP). A soil management plan will be developed for the site.

11.1 LIST OF ATTACHMENTS

- United States Department of Agriculture Natural Resources Conservation Service Web Soil Survey

United States Department of Agriculture

NRCS

Natural Resources Conservation Service

A product of the National Cooperative Soil Survey, a joint effort of the United States Department of Agriculture and other Federal agencies, State agencies including the Agricultural Experiment Stations, and local participants

Custom Soil Resource Report for Cumberland County and Part of Oxford County, Maine

58 Fore Street



August 29, 2019

Preface

Soil surveys contain information that affects land use planning in survey areas. They highlight soil limitations that affect various land uses and provide information about the properties of the soils in the survey areas. Soil surveys are designed for many different users, including farmers, ranchers, foresters, agronomists, urban planners, community officials, engineers, developers, builders, and home buyers. Also, conservationists, teachers, students, and specialists in recreation, waste disposal, and pollution control can use the surveys to help them understand, protect, or enhance the environment.

Various land use regulations of Federal, State, and local governments may impose special restrictions on land use or land treatment. Soil surveys identify soil properties that are used in making various land use or land treatment decisions. The information is intended to help the land users identify and reduce the effects of soil limitations on various land uses. The landowner or user is responsible for identifying and complying with existing laws and regulations.

Although soil survey information can be used for general farm, local, and wider area planning, onsite investigation is needed to supplement this information in some cases. Examples include soil quality assessments (http://www.nrcs.usda.gov/wps/portal/nrcs/main/soils/health/) and certain conservation and engineering applications. For more detailed information, contact your local USDA Service Center (https://offices.sc.egov.usda.gov/locator/app?agency=nrcs) or your NRCS State Soil Scientist (http://www.nrcs.usda.gov/wps/portal/nrcs/detail/soils/contactus/?cid=nrcs142p2_053951).

Great differences in soil properties can occur within short distances. Some soils are seasonally wet or subject to flooding. Some are too unstable to be used as a foundation for buildings or roads. Clayey or wet soils are poorly suited to use as septic tank absorption fields. A high water table makes a soil poorly suited to basements or underground installations.

The National Cooperative Soil Survey is a joint effort of the United States Department of Agriculture and other Federal agencies, State agencies including the Agricultural Experiment Stations, and local agencies. The Natural Resources Conservation Service (NRCS) has leadership for the Federal part of the National Cooperative Soil Survey.

Information about soils is updated periodically. Updated information is available through the NRCS Web Soil Survey, the site for official soil survey information.

The U.S. Department of Agriculture (USDA) prohibits discrimination in all its programs and activities on the basis of race, color, national origin, age, disability, and where applicable, sex, marital status, familial status, parental status, religion, sexual orientation, genetic information, political beliefs, reprisal, or because all or a part of an individual's income is derived from any public assistance program. (Not all prohibited bases apply to all programs.) Persons with disabilities who require

alternative means for communication of program information (Braille, large print, audiotape, etc.) should contact USDA's TARGET Center at (202) 720-2600 (voice and TDD). To file a complaint of discrimination, write to USDA, Director, Office of Civil Rights, 1400 Independence Avenue, S.W., Washington, D.C. 20250-9410 or call (800) 795-3272 (voice) or (202) 720-6382 (TDD). USDA is an equal opportunity provider and employer.

Contents

Preface..... 2
Soil Map..... 5
Soil Map.....6
Legend.....7
Map Unit Legend..... 8
Map Unit Descriptions..... 8
Cumberland County and Part of Oxford County, Maine.....10
Cu—Cut and fill land..... 10
HlB—Hinckley loamy sand, 3 to 8 percent slopes.....10
HlD—Hinckley loamy sand, 15 to 25 percent slopes.....11
W—Water.....12
References.....13

Soil Map

The soil map section includes the soil map for the defined area of interest, a list of soil map units on the map and extent of each map unit, and cartographic symbols displayed on the map. Also presented are various metadata about data used to produce the map, and a description of each soil map unit.

Custom Soil Resource Report
Soil Map



Map Scale: 1:2,910 if printed on A landscape (11" x 8.5") sheet.

N

Meters: 0 40 80 160 240

Feet: 0 100 200 400 600

Map projection: Web Mercator Corner coordinates: WGS84 Edge tics: UTM Zone 19N WGS84

MAP LEGEND

Area of Interest (AOI)
- Area of Interest (AOI)

Soils
- Soil Map Unit Polygons
- Soil Map Unit Lines
- Soil Map Unit Points

Special Point Features
- Blowout
- Borrow Pit
- Clay Spot
- Closed Depression
- Gravel Pit
- Gravelly Spot
- Landfill
- Lava Flow
- Marsh or swamp
- Mine or Quarry
- Miscellaneous Water
- Perennial Water
- Rock Outcrop
- Saline Spot
- Sandy Spot
- Severely Eroded Spot
- Sinkhole
- Slide or Slip
- Sodic Spot
- Spoil Area
- Stony Spot
- Very Stony Spot
- Wet Spot
- Other
- Special Line Features

Water Features
- Streams and Canals

Transportation
- Rails
- Interstate Highways
- US Routes
- Major Roads
- Local Roads

Background
- Aerial Photography

MAP INFORMATION

The soil surveys that comprise your AOI were mapped at 1:24,000.

Warning: Soil Map may not be valid at this scale.

Enlargement of maps beyond the scale of mapping can cause misunderstanding of the detail of mapping and accuracy of soil line placement. The maps do not show the small areas of contrasting soils that could have been shown at a more detailed scale.

Please rely on the bar scale on each map sheet for map measurements.

Source of Map: Natural Resources Conservation Service
Web Soil Survey URL:
Coordinate System: Web Mercator (EPSG:3857)

Maps from the Web Soil Survey are based on the Web Mercator projection, which preserves direction and shape but distorts distance and area. A projection that preserves area, such as the Albers equal-area conic projection, should be used if more accurate calculations of distance or area are required.

This product is generated from the USDA-NRCS certified data as of the version date(s) listed below.

Soil Survey Area: Cumberland County and Part of Oxford County, Maine
Survey Area Data: Version 15, Sep 6, 2018

Soil map units are labeled (as space allows) for map scales 1:50,000 or larger.

Date(s) aerial images were photographed: Data not available.

The orthophoto or other base map on which the soil lines were compiled and digitized probably differs from the background imagery displayed on these maps. As a result, some minor shifting of map unit boundaries may be evident.

Map Unit Legend

Map Unit Symbol	Map Unit Name	Acres in AOI	Percent of AOI
Cu	Cut and fill land	11.1	91.9%
HIB	Hinckley loamy sand, 3 to 8 percent slopes	0.1	0.5%
HID	Hinckley loamy sand, 15 to 25 percent slopes	0.4	3.5%
W	Water	0.5	4.0%
Totals for Area of Interest		**12.0**	**100.0%**

Map Unit Descriptions

The map units delineated on the detailed soil maps in a soil survey represent the soils or miscellaneous areas in the survey area. The map unit descriptions, along with the maps, can be used to determine the composition and properties of a unit.

A map unit delineation on a soil map represents an area dominated by one or more major kinds of soil or miscellaneous areas. A map unit is identified and named according to the taxonomic classification of the dominant soils. Within a taxonomic class there are precisely defined limits for the properties of the soils. On the landscape, however, the soils are natural phenomena, and they have the characteristic variability of all natural phenomena. Thus, the range of some observed properties may extend beyond the limits defined for a taxonomic class. Areas of soils of a single taxonomic class rarely, if ever, can be mapped without including areas of other taxonomic classes. Consequently, every map unit is made up of the soils or miscellaneous areas for which it is named and some minor components that belong to taxonomic classes other than those of the major soils.

Most minor soils have properties similar to those of the dominant soil or soils in the map unit, and thus they do not affect use and management. These are called noncontrasting, or similar, components. They may or may not be mentioned in a particular map unit description. Other minor components, however, have properties and behavioral characteristics divergent enough to affect use or to require different management. These are called contrasting, or dissimilar, components. They generally are in small areas and could not be mapped separately because of the scale used. Some small areas of strongly contrasting soils or miscellaneous areas are identified by a special symbol on the maps. If included in the database for a given area, the contrasting minor components are identified in the map unit descriptions along with some characteristics of each. A few areas of minor components may not have been observed, and consequently they are not mentioned in the descriptions, especially where the pattern was so complex that it was impractical to make enough observations to identify all the soils and miscellaneous areas on the landscape.

The presence of minor components in a map unit in no way diminishes the usefulness or accuracy of the data. The objective of mapping is not to delineate pure taxonomic classes but rather to separate the landscape into landforms or

landform segments that have similar use and management requirements. The delineation of such segments on the map provides sufficient information for the development of resource plans. If intensive use of small areas is planned, however, onsite investigation is needed to define and locate the soils and miscellaneous areas.

An identifying symbol precedes the map unit name in the map unit descriptions. Each description includes general facts about the unit and gives important soil properties and qualities.

Soils that have profiles that are almost alike make up a *soil series*. Except for differences in texture of the surface layer, all the soils of a series have major horizons that are similar in composition, thickness, and arrangement.

Soils of one series can differ in texture of the surface layer, slope, stoniness, salinity, degree of erosion, and other characteristics that affect their use. On the basis of such differences, a soil series is divided into *soil phases*. Most of the areas shown on the detailed soil maps are phases of soil series. The name of a soil phase commonly indicates a feature that affects use or management. For example, Alpha silt loam, 0 to 2 percent slopes, is a phase of the Alpha series.

Some map units are made up of two or more major soils or miscellaneous areas. These map units are complexes, associations, or undifferentiated groups.

A *complex* consists of two or more soils or miscellaneous areas in such an intricate pattern or in such small areas that they cannot be shown separately on the maps. The pattern and proportion of the soils or miscellaneous areas are somewhat similar in all areas. Alpha-Beta complex, 0 to 6 percent slopes, is an example.

An *association* is made up of two or more geographically associated soils or miscellaneous areas that are shown as one unit on the maps. Because of present or anticipated uses of the map units in the survey area, it was not considered practical or necessary to map the soils or miscellaneous areas separately. The pattern and relative proportion of the soils or miscellaneous areas are somewhat similar. Alpha-Beta association, 0 to 2 percent slopes, is an example.

An *undifferentiated group* is made up of two or more soils or miscellaneous areas that could be mapped individually but are mapped as one unit because similar interpretations can be made for use and management. The pattern and proportion of the soils or miscellaneous areas in a mapped area are not uniform. An area can be made up of only one of the major soils or miscellaneous areas, or it can be made up of all of them. Alpha and Beta soils, 0 to 2 percent slopes, is an example.

Some surveys include *miscellaneous areas*. Such areas have little or no soil material and support little or no vegetation. Rock outcrop is an example.

Cumberland County and Part of Oxford County, Maine

Cu—Cut and fill land

Map Unit Composition

Cut and fill land: 90 percent

Estimates are based on observations, descriptions, and transects of the mapunit.

Description of Cut And Fill Land

Typical profile

H1 - 0 to 65 inches: very gravelly sandy loam

Properties and qualities

Slope: 0 to 35 percent

Natural drainage class: Moderately well drained

Capacity of the most limiting layer to transmit water (Ksat): Moderately low to very high (0.06 to 20.00 in/hr)

Depth to water table: About 24 to 42 inches

Available water storage in profile: Moderate (about 6.6 inches)

HIB—Hinckley loamy sand, 3 to 8 percent slopes

Map Unit Setting

National map unit symbol: 2svm8

Elevation: 0 to 1,430 feet

Mean annual precipitation: 36 to 53 inches

Mean annual air temperature: 39 to 55 degrees F

Frost-free period: 140 to 240 days

Farmland classification: Farmland of statewide importance

Map Unit Composition

Hinckley and similar soils: 85 percent

Estimates are based on observations, descriptions, and transects of the mapunit.

Description of Hinckley

Setting

Landform: Kame terraces, kames, outwash terraces, outwash deltas, outwash plains, eskers, moraines

Landform position (two-dimensional): Summit, backslope, footslope, shoulder

Landform position (three-dimensional): Nose slope, side slope, base slope, crest, tread, riser

Down-slope shape: Linear, convex, concave

Across-slope shape: Convex, linear, concave

Parent material: Sandy and gravelly glaciofluvial deposits derived from gneiss and/or granite and/or schist

Typical profile

Oe - 0 to 1 inches: moderately decomposed plant material

A - 1 to 8 inches: loamy sand

Bw1 - 8 to 11 inches: gravelly loamy sand

Bw2 - 11 to 16 inches: gravelly loamy sand
BC - 16 to 19 inches: very gravelly loamy sand
C - 19 to 65 inches: very gravelly sand

Properties and qualities

Slope: 3 to 8 percent
Depth to restrictive feature: More than 80 inches
Natural drainage class: Excessively drained
Runoff class: Very low
Capacity of the most limiting layer to transmit water (Ksat): Moderately high to very high (1.42 to 99.90 in/hr)
Depth to water table: More than 80 inches
Frequency of flooding: None
Frequency of ponding: None
Salinity, maximum in profile: Nonsaline (0.0 to 1.9 mmhos/cm)
Available water storage in profile: Very low (about 3.0 inches)

Interpretive groups

Land capability classification (irrigated): None specified
Land capability classification (nonirrigated): 3s
Hydrologic Soil Group: A
Hydric soil rating: No

HID—Hinckley loamy sand, 15 to 25 percent slopes

Map Unit Setting

National map unit symbol: 2svmc
Elevation: 0 to 1,460 feet
Mean annual precipitation: 36 to 71 inches
Mean annual air temperature: 39 to 55 degrees F
Frost-free period: 140 to 240 days
Farmland classification: Not prime farmland

Map Unit Composition

Hinckley and similar soils: 85 percent
Estimates are based on observations, descriptions, and transects of the mapunit.

Description of Hinckley

Setting

Landform: Outwash plains, eskers, moraines, outwash terraces, outwash deltas, kame terraces, kames
Landform position (two-dimensional): Backslope
Landform position (three-dimensional): Side slope, crest, head slope, nose slope, riser
Down-slope shape: Convex, linear, concave
Across-slope shape: Linear, convex, concave
Parent material: Sandy and gravelly glaciofluvial deposits derived from gneiss and/or granite and/or schist

Typical profile

Oe - 0 to 1 inches: moderately decomposed plant material

A - 1 to 8 inches: loamy sand
Bw1 - 8 to 11 inches: gravelly loamy sand
Bw2 - 11 to 16 inches: gravelly loamy sand
BC - 16 to 19 inches: very gravelly loamy sand
C - 19 to 65 inches: very gravelly sand

Properties and qualities

Slope: 15 to 25 percent
Depth to restrictive feature: More than 80 inches
Natural drainage class: Excessively drained
Runoff class: Low
Capacity of the most limiting layer to transmit water (Ksat): Moderately high to very high (1.42 to 99.90 in/hr)
Depth to water table: More than 80 inches
Frequency of flooding: None
Frequency of ponding: None
Salinity, maximum in profile: Nonsaline (0.0 to 1.9 mmhos/cm)
Available water storage in profile: Low (about 3.1 inches)

Interpretive groups

Land capability classification (irrigated): None specified
Land capability classification (nonirrigated): 6e
Hydrologic Soil Group: A
Hydric soil rating: No

W—Water

Map Unit Composition

Water: 100 percent
Estimates are based on observations, descriptions, and transects of the mapunit.

Description of Water

Setting

Landform: Lakes

References

American Association of State Highway and Transportation Officials (AASHTO). 2004. Standard specifications for transportation materials and methods of sampling and testing. 24th edition.

American Society for Testing and Materials (ASTM). 2005. Standard classification of soils for engineering purposes. ASTM Standard D2487-00.

Cowardin, L.M., V. Carter, F.C. Golet, and E.T. LaRoe. 1979. Classification of wetlands and deep-water habitats of the United States. U.S. Fish and Wildlife Service FWS/OBS-79/31.

Federal Register. July 13, 1994. Changes in hydric soils of the United States.

Federal Register. September 18, 2002. Hydric soils of the United States.

Hurt, G.W., and L.M. Vasilas, editors. Version 6.0, 2006. Field indicators of hydric soils in the United States.

National Research Council. 1995. Wetlands: Characteristics and boundaries.

Soil Survey Division Staff. 1993. Soil survey manual. Soil Conservation Service. U.S. Department of Agriculture Handbook 18. http://www.nrcs.usda.gov/wps/portal/nrcs/detail/national/soils/?cid=nrcs142p2_054262

Soil Survey Staff. 1999. Soil taxonomy: A basic system of soil classification for making and interpreting soil surveys. 2nd edition. Natural Resources Conservation Service, U.S. Department of Agriculture Handbook 436. http://www.nrcs.usda.gov/wps/portal/nrcs/detail/national/soils/?cid=nrcs142p2_053577

Soil Survey Staff. 2010. Keys to soil taxonomy. 11th edition. U.S. Department of Agriculture, Natural Resources Conservation Service. http://www.nrcs.usda.gov/wps/portal/nrcs/detail/national/soils/?cid=nrcs142p2_053580

Tiner, R.W., Jr. 1985. Wetlands of Delaware. U.S. Fish and Wildlife Service and Delaware Department of Natural Resources and Environmental Control, Wetlands Section.

United States Army Corps of Engineers, Environmental Laboratory. 1987. Corps of Engineers wetlands delineation manual. Waterways Experiment Station Technical Report Y-87-1.

United States Department of Agriculture, Natural Resources Conservation Service. National forestry manual. http://www.nrcs.usda.gov/wps/portal/nrcs/detail/soils/home/?cid=nrcs142p2_053374

United States Department of Agriculture, Natural Resources Conservation Service. National range and pasture handbook. http://www.nrcs.usda.gov/wps/portal/nrcs/detail/national/landuse/rangepasture/?cid=stelprdb1043084

United States Department of Agriculture, Natural Resources Conservation Service. National soil survey handbook, title 430-VI. http://www.nrcs.usda.gov/wps/portal/nrcs/detail/soils/scientists/?cid=nrcs142p2_054242

United States Department of Agriculture, Natural Resources Conservation Service. 2006. Land resource regions and major land resource areas of the United States, the Caribbean, and the Pacific Basin. U.S. Department of Agriculture Handbook 296. http://www.nrcs.usda.gov/wps/portal/nrcs/detail/national/soils/?cid=nrcs142p2_053624

United States Department of Agriculture, Soil Conservation Service. 1961. Land capability classification. U.S. Department of Agriculture Handbook 210. http://www.nrcs.usda.gov/Internet/FSE_DOCUMENTS/nrcs142p2_052290.pdf

12. STORMWATER MANAGEMENT

The attached Stormwater Management Plan describes the proposed stormwater management measures for the project, as shown on the design drawings attached to Section 1 of this Report. A USGS map and a soils map are attached to Section 1 and Section 11 of this Report, respectively.

12.1 LIST OF ATTACHMENTS

- Stormwater Management Plan (Bound Separately)

13. URBAN IMPAIRED STREAM

The proposed development is not located within the watershed of an Urban Impaired Stream; the Urban Impaired Stream Standard does not apply.

14. BASIC STANDARD

The proposed development is adjacent to the Fore River; there are no other known protected resources associated with the Site. As shown by the soil survey attached to Section 11 of this Report, the Site is comprised primarily of urban fill. The Soil Erosion and Sediment Control Plan and compliance with the Basic Standard is described in the Stormwater Management provided as part of Section 12 of this Report.

During construction, the Contractor will be responsible for conducting inspections in accordance with the attached *Stormwater Erosion & Sediment Control Inspection Report Form* (or equivalent). Inspections shall be performed at least once a week, as well as before and after storm events. A person with knowledge of stormwater management and erosion and sediment control, including the standards and conditions of the permit approvals, shall conduct the inspections and perform maintenance of the facilities. If maintenance or modifications are necessary, implementation will be completed within seven days and prior to any rainfall event. After construction, the Owner will be responsible for inspecting and maintaining the Site's stormwater system.

14.1 LIST OF ATTACHMENTS

- Erosion & Sediment Control Inspection Report Form.

EROSION & SEDIMENT CONTROL
INSPECTION REPORT FORM

Inspectors: Date: ___ / ___ / _____

_____ of _____ (Project Owner)
_____ of _____ (Contractor)
_____ of _____
_____ of _____

Storm Event? ☐ Yes ☐ No Rainfall Amount _____ Storm Duration _____ hours

Visual Observations of Activity and Site Conditions:

Disturbed Soil Areas:

Storage Of Soils:

Sediment & Erosion Control Measures:

Construction Site Entrance:

Surface Stabilization:

Corrective Action Taken:

Attachments (if any):

Signature:

Name Title Date

15. GROUNDWATER

The proposed development is not located within a Significant Sand and Gravel Aquifer; as previously noted, the Site is comprised primarily of urban fill. Environmental assessments of the Site have been conducted and the Owner is a participant in the Maine Department of Environmental Protection Voluntary Response Action Program (VRAP). The proposed development will not infiltrate to or extract groundwater and is not anticipated to produce any hazardous waste. It is not anticipated that the proposed development will result in any impacts to groundwater.

16. WATER SUPPLY

The proposed development will be provided with both fire protection water service and domestic water service as shown on the drawings via a private water system that will connect to the public water main on Fore Street. Woodard & Curran has been working directly with the Portland Water District to determine the appropriate design for this work. An ability to serve determination will be provided upon receipt.

17. WASTEWATER DISPOSAL

The proposed development will be provided with sanitary sewer service as shown on the drawings. The private system on the site will include a combination of gravity sewer and forcemain with a pump station that will discharge to the sewer on the Thames Street Extension. The existing sewer service on Fore Street will be abandoned. The proposed development will include restaurants, kitchens, and parking garages; grease traps and oil/water separators will be provided as shown on the drawings. The attached letter is provided to request confirmation of ability to serve the proposed development; the Wastewater Capacity Application was submitted with this letter. A copy of the City's determination will be provided upon receipt.

17.1 LIST OF ATTACHMENTS

- Portland Department of Public Works Request for Ability to Serve Letter.

18. SOLID WASTE

18.1 SOLID WASTE

All solid waste materials and recyclables from the proposed development will be transported and disposed of or recycled in accordance with applicable laws and regulations.

18.2 CONSTRUCTION & DEMOLITION DEBRIS

The proposed development will generate construction waste and demolition debris (CDD). The Contractor will be responsible for properly disposing of the CDD. The Contractor will be responsible for handling, managing, and disposing of all waste generated by construction in accordance with the Maine Solid Waste Management Regulations and all other applicable local, state, and federal regulations.

18.3 SPECIAL & HAZARDOUS WASTE

The proposed development is not anticipated to produce any hazardous waste. Environmental assessments of the Site have been conducted and the Owner is a participant in the Maine Department of Environmental Protection Voluntary Response Action Program (VRAP). A soil management plan will be developed for the site to address management of "urban fill" special waste anticipated to be encountered during the construction process.

19. FLOODING

The proposed development is partially located within a flood hazard zone, as shown on the FEMA Flood Insurance Rate Map attached to this Section. An application for a Flood Hazard Development Permit is being submitted to the City of Portland. The proposed development will not cause or increase flooding or cause an unreasonable flood hazard to any adjacent structures. The flood zones are located along the southern portions of the proposed development, as shown on the drawings.

19.1 LIST OF ATTACHMENTS

- FEMA Flood Insurance Rate Map.

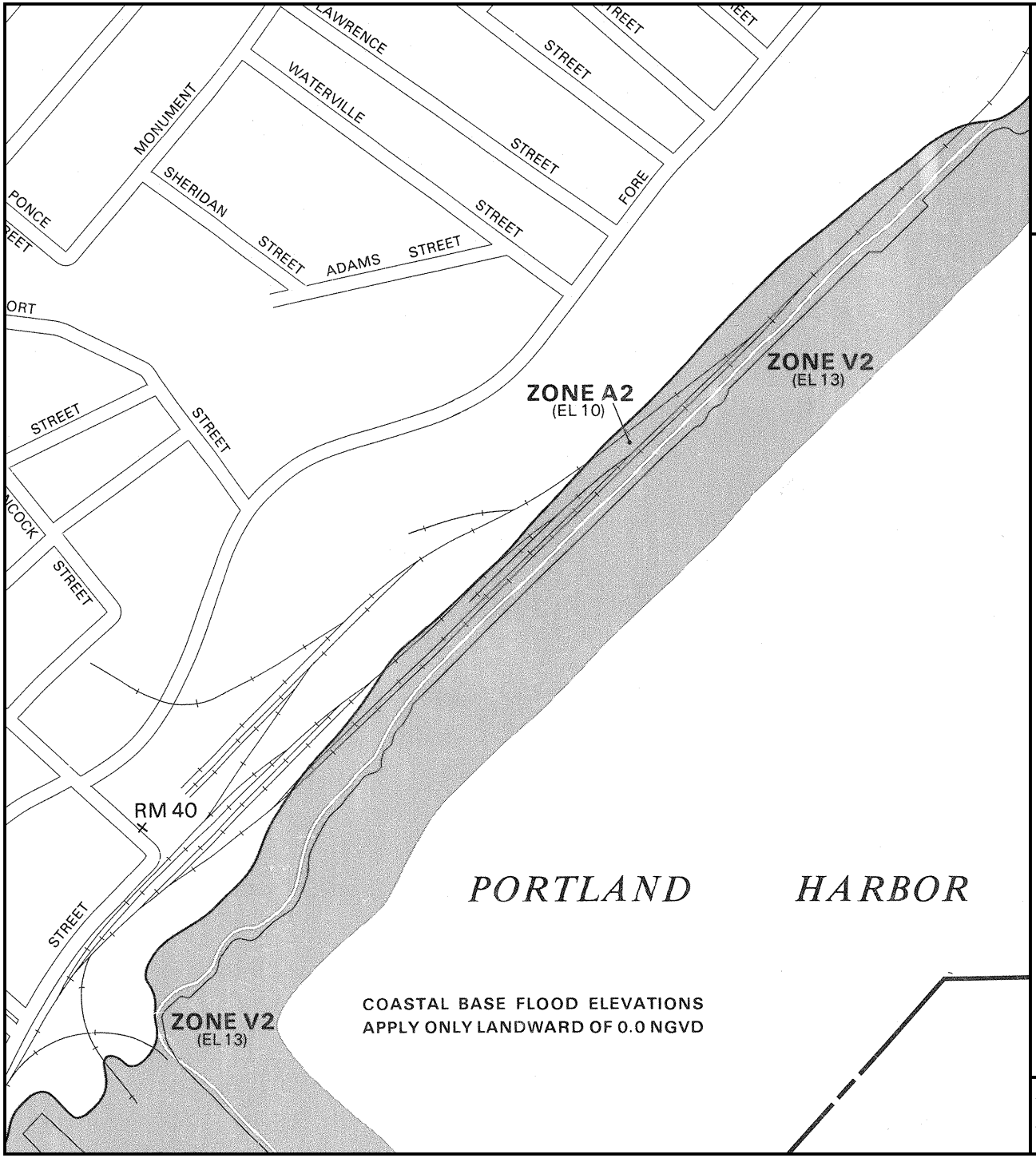

NATIONAL FLOOD INSURANCE PROGRAM

FIRM

FLOOD INSURANCE RATE MAP

CITY OF
PORTLAND, MAINE
CUMBERLAND COUNTY

PANEL 14 OF 17
(SEE MAP INDEX FOR PANELS NOT PRINTED)

COMMUNITY-PANEL NUMBER
230051 0014 B

EFFECTIVE DATE:
JULY 17, 1986

Federal Emergency Management Agency

This is an official copy of a portion of the above referenced flood map. It was extracted using F-MIT On-Line. This map does not reflect changes or amendments which may have been made subsequent to the date on the title block. For the latest product information about National Flood Insurance Program flood maps check the FEMA Flood Map Store at www.msc.fema.gov

20. BLASTING

Haley & Aldrich, the geotechnical engineer for the project has confirmed that based on investigations completed to date, no blasting is anticipated for this project.

21. AIR EMISSIONS

The project will not require an air emissions license; this Section is not applicable.

22. ODORS

The proposed development will not involve any processes that emit significant odors; this Section is not applicable.

23. WATER VAPOR

The proposed development will not use water for any processes that would emit water vapor; this Section is not applicable.

24. SUNLIGHT

The proposed development will not block access to sunlight for any structures utilizing solar energy; this Section is not applicable.

25. NOTICES

The City of Portland has Delegated Review Authority for this application; as such, it is our understanding that the public notice requirements associated with MaineDEP Site Law do not apply.

WOODARD &CURRAN

woodardcurran.com

COMMITMENT & INTEGRITY DRIVE RESULTS

COMMITMENT & INTEGRITY
DRIVE RESULTS

41 Hutchins Drive
Portland, Maine 04102
www.woodardcurran.com

T 800.426.4262
T 207.774.2112
F 207.774.6635

Att. Q

November 8, 2019

James Rather
City of Portland Development Review Services Manager
389 Congress Street
Portland, ME 04101

Re: Portland Foreside Development Co. – Phase 1 | 58 Fore Street
Level III Site Plan Application
Subdivision Application
Site Location of Development Application

Dear James:

On behalf of Portland Foreside Development Co, Woodard & Curran is pleased to submit Phase 1 of the Portland Foreside Development project located at 58 Fore Street in Portland, Maine for review of a Level III Site Plan Application, a Subdivision Application, and a Site Location of Development Application.

The proposed development is the first phase of the 58 Fore Street Master Development Plan, unanimously approved by the Portland Planning Board (Project ID: 2016-224) on December 22, 2016, to redevelop and revitalize the 10-acre former Portland Company Complex into a mixed-use development. The Master Development Plan consists of six development "blocks" consisting of new buildings, renovated historic buildings, open space plazas, public access easements, view corridors to the waterfront, and a private roadway that provides shared access for both vehicular and pedestrian traffic through the Site. Phase 1 of the development includes the following:

- Block 1
  - Parcel 1A – Construction of a Class A office building with ground floor retail and a single parking deck.
  - Parcel 1C – Reconstruction of Building 12 which was meticulously catalogued and disassembled with approval from Historic Preservation Board and will be rebuilt in the more prominent location detailed in the site plan with uses that include a fine dining restaurant, office space, and two residential units.
- Block 2
  - Parcels 2A, 2B, and 2C – Renovation of the site's historic core buildings (Building 2, Building 3) into a local food market, restaurant, office space, and event spaces.
- Block 4
  - Parcel 4 – Construction of 5 levels of a parking garage with residential units and retail.
- Infrastructure
  - Remaining Land By Developer – Construction of a shared street, public plazas, and subsurface utilities to support the development.
  - Adjacent City of Portland Maine DOT and City of Portland Properties – Adjustment of the Maine Narrow Gauge Railroad and the Eastern Promenade Trail to a location closer to the water.
- Interim Conditions
  - Block 1 – Regrading and loam and seed on Parcel 1B.

- Block 3 – Minor surface improvements, grading, and utility work in Parcel 3 to provide temporary access to the adjacent Fore Points Marina.
- Blocks 5 and 6 – Minor surface improvements, grading, and utility work within Parcel 5 to enable the surrounding work. No development is proposed in association with these blocks.

The Site Plan and Subdivision Application documents were prepared in accordance with the City of Portland's Chapter 14, Land Use Code of Ordinances and meet the applicable sections of the City of Portland Design and Technical Manuals. The Site Location of Development Application has been prepared in accordance with Maine Department of Environmental Protection Chapter 500 regulations, and it is our understanding that the City will be reviewing under their Delegated Review Authority. The Application reports, attachments and design drawings will be uploaded into the Eplan folder when it is available for the project. If there are any questions on the uploaded materials, please don't hesitate to let me know. Thank you for coordinating the review of this project. If you have any questions regarding this application, please feel free to contact me at (207) 558-3763 or by email at lswett@woodardcurran.com.

Sincerely,

WOODARD & CURRAN INC.

Lauren Swett, PE
Technical Manager

Denise Cameron, PE
Project Manager

cc: David Senus, PE, Portland Foreside Development Co.
Mary McCrann, AICP, Portland Foreside Development Co.

Att. R

STORMWATER MANAGEMENT PLAN

58 Fore Street
Phase 1

41 Hutchins Drive
Portland, ME 04102
800-426-4262

woodardcurran.com
COMMITMENT & INTEGRITY DRIVE RESULTS

0227007.16
Portland Foreside Development Co.
November 2019

TABLE OF CONTENTS

SECTION **PAGE NO.**

1. STORMWATER MANAGEMENT PLAN 1-1

1.1 Existing Conditions 1-1
1.2 Proposed Development 1-1
1.3 Stormwater Standards 1-1
1.3.1 Basic Standard (Soil Erosion & Sediment Control) 1-2
1.3.2 Flooding Standard (Stormwater Quantity) 1-2
1.3.3 General & Redevelopment Standards (Stormwater Quality) 1-3
1.4 Inspection & Maintenance Requirements 1-3

APPENDICES

Appendix A: Stormwater Inspection & Maintenance Plan
Appendix B: Stormwater Quality Calculations
Appendix C: HydroCAD Report
Appendix D: Figures

1. STORMWATER MANAGEMENT PLAN

This Stormwater Management Plan (SWMP) describes existing site conditions, the proposed development, compliance with applicable stormwater standards, and inspection and maintenance requirements for the proposed stormwater system associated with Phase 1 of the Portland Foreside Development located at 58 Fore Street in Portland, Maine.

1.1 Existing Conditions

The project site is a portion of an approximately 10-acre property adjacent to the Fore River. The property was previously developed as the Portland Company Complex, which contained various industrial uses. Many of the existing buildings located within the project area have previously been demolished. Current conditions consist primarily of impervious paved and gravel areas, with some areas of sparse vegetation.

The project site is bordered by Fore Street to the north, the Fore Connector Road to the west, the Maine Narrow Gauge Railroad to the south, and the remainder of the existing Portland Company Complex to the east. Runoff from the Site drains via sheet flow in a southerly direction to a series of catch basins that ultimately discharge to the Fore River. A portion of the Site is located within the FEMA Flood Zone.

1.2 Proposed Development

The proposed development will result in approximately 8-acres of disturbance and approximately 6.7-acres of impervious area. Proposed work includes the following:

- Construction of an office building with retail wrap and a single parking deck.
- Relocation and reconstruction of historic "Building 12" with a restaurant, office, and two residences.
- Renovation of the site's historic core buildings into market, restaurant, office, and multi-use spaces.
- Construction of a parking garage with residential space, and a small amount of retail.
- Construction of a shared street, plazas, and subsurface utilities to support the development.
- Relocation of the Maine Narrow Gauge Railroad and the Eastern Promenade Trail
- Placement of pavement to provide temporary access to the adjacent Fore Points Marina.
- Landscaping and other site improvements to enable the surrounding work.

The proposed drainage system will be comprised of a series of catch basins and trench drains located along the centerline of the new roadway, which discharge to a subsurface stormwater management system that will provide storage and treatment for site runoff prior to discharging to the Fore River. The subsurface stormwater management system will consist of R-Tanks for storage and Jellyfish Filters for stormwater treatment. The proposed stormwater management systems are discussed in further detail in the following sections.

1.3 Stormwater Standards

The project is subject to the MaineDEP Chapter 500 Stormwater Standards. The project is not located within the watershed of an Urban Impaired Stream and is therefore not subject to the Urban Impaired Stream Standard. The following sections describe the project's compliance with the applicable stormwater standards.

1.3.1 Basic Standard (Soil Erosion & Sediment Control)

A variety of erosion and sediment control measures will be utilized during construction, including but not limited to the following:

- Stabilized construction entrances;
- Up-gradient runoff diversion barriers;
- Downgradient sediment barriers;
- Catch basin inlet protection devices;
- Preservation and maintenance of vegetated areas to the maximum extent possible;
- Temporary stabilization of disturbed areas to be exposed for more than seven days;
- Permanent stabilization of final graded areas;
- Controls for fugitive dust, debris, and other materials; and
- Inspection of all measures until the Site is permanently stabilized.

Structural measures will be installed as shown on the design drawings. Details and specifications for these measures are included on the drawings. All measures will be implemented in accordance with the "Maine Erosion and Sedimentation Handbook for Construction: Best Management Practices". All temporary measures will be installed prior to any earth-disturbing activities and will be removed upon permanent stabilization of the Site. The Contractor will be responsible for implementing and maintaining all erosion and sediment control measures in an effective operating condition during construction. Permanent erosion control measures will include vegetation and pavement. After construction, the Owner will be responsible for inspecting and maintaining the Site as described in Section 1.4 of this Report.

1.3.2 Flooding Standard (Stormwater Quantity)

Runoff from the proposed project will ultimately discharge to the adjacent Fore River, which is a tidal waterbody, via either sheet flow, the on-site stormdrain system, or the City's 60-inch stormdrain located within the adjacent Fore Connector roadway. In accordance with Section 4.F(3) of the MaineDEP Chapter 500 Stormwater Standards, a project is eligible for a waiver from the Flooding Standard if it discharges to a coastal wetland or a major river segment. Per the Master Development Plan Approval letter dated December 22, 2016, the City of Portland Planning Board voted to grant a waiver from the Flooding Standard for future site plan applications associated with the 58 Fore Street Site.

The stormwater management system has been adequately sized to safely convey runoff from the proposed Site. The stormwater management system was designed utilizing the HydroCAD 10.00 Stormwater Modeling System by Applied Microcomputer Systems. Utilizing the HydroCAD software, a 24-hour duration and Type-III rainfall distribution was applied to the rainfall depths provided in Appendix H of the MaineDEP Chapter 500 Rules in order to estimate the peak flows that the stormwater management system will need to accommodate. For your reference, a copy of the HydroCAD Report and the Drainage Area Figure for the proposed site are provided in Appendix C and D of this Report, respectively. It should be noted that the stormwater management system has been over-sized in order to accommodate future development.

HydroCAD provides a lookup table for curve number (CN), which is a measure of the retention and runoff properties of various surfaces based on the Hydrological Soil Group (HSG) and land cover type. According to the latest NRCS Web Soil Survey data, the Site consists largely of urban fill, which is assumed to be equivalent to HSG A soils. The area of each land cover type was delineated utilizing survey information and HydroCAD computed the final CN for each subcatchment based on an area-weighted average.

The Time of Concentration (Tc) is the time required for runoff to travel from the most hydrologically distant point of a subcatchment to the point of discharge. The Tc for each subcatchment was computed within HydroCAD as the sum of the travel times for each consecutive segment along the longest flow path. The longest flow path was delineated utilizing topographic survey data and partitioned into segments based on flow types and land cover. The primary types of flow include sheet flow, shallow concentrated flow, and channel flows. A minimum Tc of six minutes was utilized for all subcatchment areas.

1.3.3 General & Redevelopment Standards (Stormwater Quality)

The proposed project is considered redevelopment and for stormwater quality is subject to the redevelopment standards. A figure showing the area of redevelopment is included in Appendix D of this Report. Calculations have been prepared in accordance with Section 4.C(2)(d) of the MaineDEP Chapter 500 Stormwater Standards to determine how much treatment is required for the proposed redevelopment project. Based on the calculations provided in Appendix B of this Report, it has been determined that the proposed project is required to provide treatment for 50% of the redevelopment area. Approximately 58% of the Phase 1 redevelopment area will be captured and treated. It should be noted that future phases of the project are anticipated to improve the overall pollutant impact of the project, as they plan to convert open gravel and paved parking areas to roof area and include green roof areas and additional stormwater treatment measures. The redevelopment calculations will be re-evaluated as part of the design of future phases to determine if treatment requirements change.

Based on recent discussions with Jeff Dennis, MaineDEP Watershed Management Unit Biologist, it is our understanding that the project will not be required to provide storage for the full water quality channel protection volume (typically 1-inch over impervious areas and 0.4-inches over landscaped areas) because the project ultimately discharges to the Fore River. Some storage will be provided by proposed R-Tanks, which will increase the time of concentration on-site. The treatment calculations provided in Appendix B of this Report include a summary of the water quality volume that will be provided. We will continue to coordinate with the MaineDEP to obtain approval for the reduced water quality volume.

Jellyfish Filters will provide stormwater quality treatment for the Site. The system has been designed in accordance with the MaineDEP proprietary BMP approval letter to Contech dated January 21, 2015. The Jellyfish Filters have been sized to accommodate the water quality flow from 1-inch of runoff over the entire drainage area. Larger storm events will bypass the filter cartridges via an internal weir. A letter demonstrating that the design of the Jellyfish Filters has been reviewed and approved by the manufacturer is provided in Appendix B of this Report. It should also be noted that the stormwater management system has been over-sized to treat and convey runoff from future phases of the project.

1.4 Inspection & Maintenance Requirements

General inspection and maintenance of stormwater systems will take place during and after construction. During construction, the Contractor will be responsible for inspecting and maintaining the Site, as described in Section 1.3.1 of this Report. Upon completion of construction, the property owner will be responsible for implementing the Inspection and Maintenance Plan for the proposed stormwater system, which is provided in Appendix A of this Report.

APPENDIX A: STORMWATER INSPECTION & MAINTENANCE PLAN

STORMWATER INSPECTION & MAINTENANCE PLAN

Portland Foreside Development – Phase 1, Portland Maine

General inspection and maintenance during and after construction must take place in accordance with the requirements outlined in Appendix B of the Maine Department of Environmental Protection (MaineDEP) Chapter 500 Rules. Upon completion of the project, the Owner will assume responsibility for overseeing the property, including the inspection and maintenance of the Site's stormwater drainage system and treatment measures outlined herein. A person with knowledge of stormwater management and erosion and sediment control, including the standards and conditions in the permit, shall conduct the inspections and perform maintenance of the facilities.

Inspection and maintenance activities will be performed per the attached checklist, schedule, and manufacturer guidelines; an example page of the BMP Maintenance Log that shall be kept on-site is also attached.

INSPECTION AND MAINTENANCE OF STORMWATER SYSTEMS

Trash, debris, and sediment shall be removed from stormdrain pipes and catch basins as needed on a semi-annual basis. In addition to the inspection and maintenance of stormwater systems, paved areas will be inspected annually each spring. These areas will be kept clean and clear through periodic sweeping and winter plowing as required. Inspections will also ensure pavement markings are repainted as needed to maintain proper traffic circulation. Paved areas will be plowed and sanded as often as necessary to maintain public safety. Periodic sweeping of pavement will reduce the amount of sediment available to enter the stormwater systems, in turn reducing the need to clean the stormwater systems. The R-Tank and Jellyfish systems must be inspected and maintained per the manufacturer's guidelines, which are outlined in the attached guidance documents.

STORMWATER INSPECTION CHECKLIST

Inspection by: _____ Date: _____

Stormwater Management Feature	Condition						Comments
Vegetative cover	no bare spots, no evidence of rill erosion		some bare spots, some rill erosion		large bare areas, extensive erosion		
Subsurface Drainage System	no siltation		some siltation		heavily silted in		
Subsurface Drainage System	no clogging/flooding		some clogging/flooding		heavy clogging/flooding		
Subsurface Drainage System	outlet free of erosion		some erosion at outlet		outlet heavily eroded		
Subsurface Drainage System	inlet/outlet clear		some debris		completely blocked		
Jellyfish System*	Cartridges are in good condition		Cartridges in need of cleaning		Cartridges in need of replacement		
Jellyfish System*	no clogging/flooding		some clogging/flooding		heavy clogging/flooding		

**See attached manufacturer's guidelines for Jellyfish System maintenance and inspection.*

Recommended Actions: _____

_____

Actions Completed: _____ Date: _____

MAINTENANCE TASKS	**SCHEDULE**
Inspect for sediment accumulation	Spring and Fall
Remove sediment accumulation	As needed
Clean debris	As needed
Inspect for erosion	As needed
Reestablish vegetation in erosion areas	Early spring
Replace stone rip-rap	Every 3 – 5 years as needed
Inspect structural elements during wet weather and compare to as-built plans	Annually
Make adjustments or replacements as determined by wet weather observations	As needed
Keep records of all inspections and maintenance activities	Annually
Have a professional engineer perform emergency inspections upon identification of severe problems	As needed

R-TANK OPERATION, INSPECTION & MAINTENANCE

Operation

Your ACF R-Tank System has been designed to function in conjunction with the engineered drainage system on your site, the existing municipal infrastructure, and/or the existing soils and geography of the receiving watershed. Unless your site included certain unique and rare features, the operation of your R-Tank System will be driven by naturally occurring systems and will function autonomously. However, upholding a proper schedule of Inspection & Maintenance is critical to ensuring continued functionality and optimum performance of the system.

Inspection

Both the R-Tank and all stormwater pre-treatment features incorporated into your site must be inspected regularly. Inspection frequency for your system must be determined based on the contributing drainage area, but should never exceed one year between inspections (six months during the first year of operation).

Inspections may be required more frequently for pre-treatment systems. You should refer to the manufacturer requirements for the proper inspection schedule.

With the right equipment your inspection and measurements can be accomplished from the surface without physically entering any confined spaces. If your inspection does require confined space entry, you MUST follow all local/regional requirements as well as OSHA standards.

R-Tank Systems may incorporate Inspection Ports, Maintenance Ports, and/or adjoining manholes. Each of these features are easily accessed by removing the lid at the surface. With the cover removed, a visual inspection can be performed to identify sediment deposits within the structure. Using a flashlight, ALL access points should be examined to complete a thorough inspection.

Inspection Ports
Usually located centrally in the R-Tank System, these perforated columns are designed to give the user a base-line sediment depth across the system floor.

Maintenance Ports
Usually located near the inlet and outlet connections, you'll likely find deeper deposits of heavier sediments when compared to the Inspection Ports.

Manholes
Most systems will include at least two manholes - one at the inlet and another at the outlet. There may be more than one location where stormwater enters the system, which would result in additional manholes to inspect.

Bear in mind that these manholes often include a sump below the invert of the pipe connecting to the R-Tank. These sumps are designed to capture sediment before it reaches the R-Tank, and they should be kept clean to ensure they function properly. However, existence of sediment in the sump does NOT necessarily mean sediment has accumulated in the R-Tank.

After inspecting the bottom of the structure, use a mirror on a pole (or some other device) to check for sediment or debris in the pipe connecting to the R-Tank.

R-TANK OPERATION INSPECTION & MAINTENANCE

If sediment or debris is observed in any of these structures, you should determine the depth of the material. This is typically accomplished with a stadia rod, but you should determine the best way to obtain the measurement.

All observations and measurements should be recorded on an Inspection Log kept on file. We've included a form you can use at the end of this guideline.

Maintenance

The R-Tank System should be back-flushed once sediment accumulation has reached 6" or 15% of the total system height. Use the chart below as a guideline to determine the point at which maintenance is required on your system.

R-Tank Unit	Height	Max Sediment Dept
Mini	9.5"	1.5"
Single	17"	3"
Double	34"	5"
Triple	50"	6"
Quad	67"	6"
Pent	84"	6"

Before any maintenance is performed on your system, be sure to plug the outlet pipe to prevent contamination of the adjacent systems.

To back-flush the R-Tank, water is pumped into the system through the Maintenance Ports as rapidly as possible. Water should be pumped into ALL Maintenance Ports. The turbulent action of the water moving through the R-Tank will suspend sediments which may then be pumped out.

If your system includes an Outlet Structure, this will be the ideal location to pump contaminated water out of the system. However, removal of back-flush water may be accomplished through the Maintenance Ports, as well.

For systems with large footprints that would require extensive volumes of water to properly flush the system, you should consider performing your maintenance within 24 hours of a rain event. Stormwater entering the system will aid in the suspension of sediments and reduce the volume of water required to properly flush the system.

Once removed, sediment-laden water may be captured for disposal or pumped through a Dirtbag™ (if permitted by the locality).

ACF ENVIRONMENTAL
LET'S GET IT DONE

2831 Cardwell Road
Richmond, Virginia, 23234
800.448.3636
FAX 804.743.7779
acfenvironmental.com

Step-By-Step Inspection & Maintenance Routine

1) **Inspection**
    a. Inspection Port
        i. Remove Cap
        ii. Use flashlight to detect sediment deposits
        iii. If present, measure sediment depth with stadia rod
        iv. Record results on Maintenance Log
        v. Replace Cap
    b. Maintenance Port/s
        i. Remove Cap
        ii. Use flashlight to detect sediment deposits
        iii. If present, measure sediment depth with stadia rod
        iv. Record results on Maintenance Log
        v. Replace Cap
        vi. Repeat for ALL Maintenance Ports
    c. Adjacent Manholes
        i. Remove Cover
        ii. Use flashlight to detect sediment deposits
        iii. If present, measure sediment depth with stadia rod, accounting for depth of sump (if present)
        iv. Inspect pipes connecting to R-Tank
        v. Record results on Maintenance Log
        vi. Replace Cover
        vii. Repeat for ALL Manholes that connect to the R-Tank

2) **Maintenance**
    a. Plug system outlet to prevent discharge of back-flush water
    b. Determine best location to pump out back-flush water
    c. Remove Cap from Maintenance Port
    d. Pump water as rapidly as possible (without over-topping port) into system until at least 1”
    of water covers system bottom
    e. Replace Cap
    f. Repeat at ALL Maintenance Ports
    g. Pump out back-flush water to complete back-flushing
    h. Vacuum all adjacent structures and any other structures or stormwater pre-treatment systems that require attention
    i. Sediment-laden water may be captured for disposal or pumped through a Dirtbag™.
    j. Replace any remaining Caps or Covers
    k. Record the back-flushing event in your Maintenance Log with any relevant specifics

R-Tank Maintenance Log

Site Name:_____

Location:_____

System Owner:_____

Company Responsible for Maintenance:_____

Contact:_____

Phone Number:_____

Date	Location	Depth to Bottom	Depth to Sediment	Sediment Depth	Observations/Notes	Initials

For more information about our products, contact Inside Sales at 800.448.3636 or email at info@acfenv.com

CONTECH®
ENGINEERED SOLUTIONS

Jellyfish® Filter Maintenance Guide

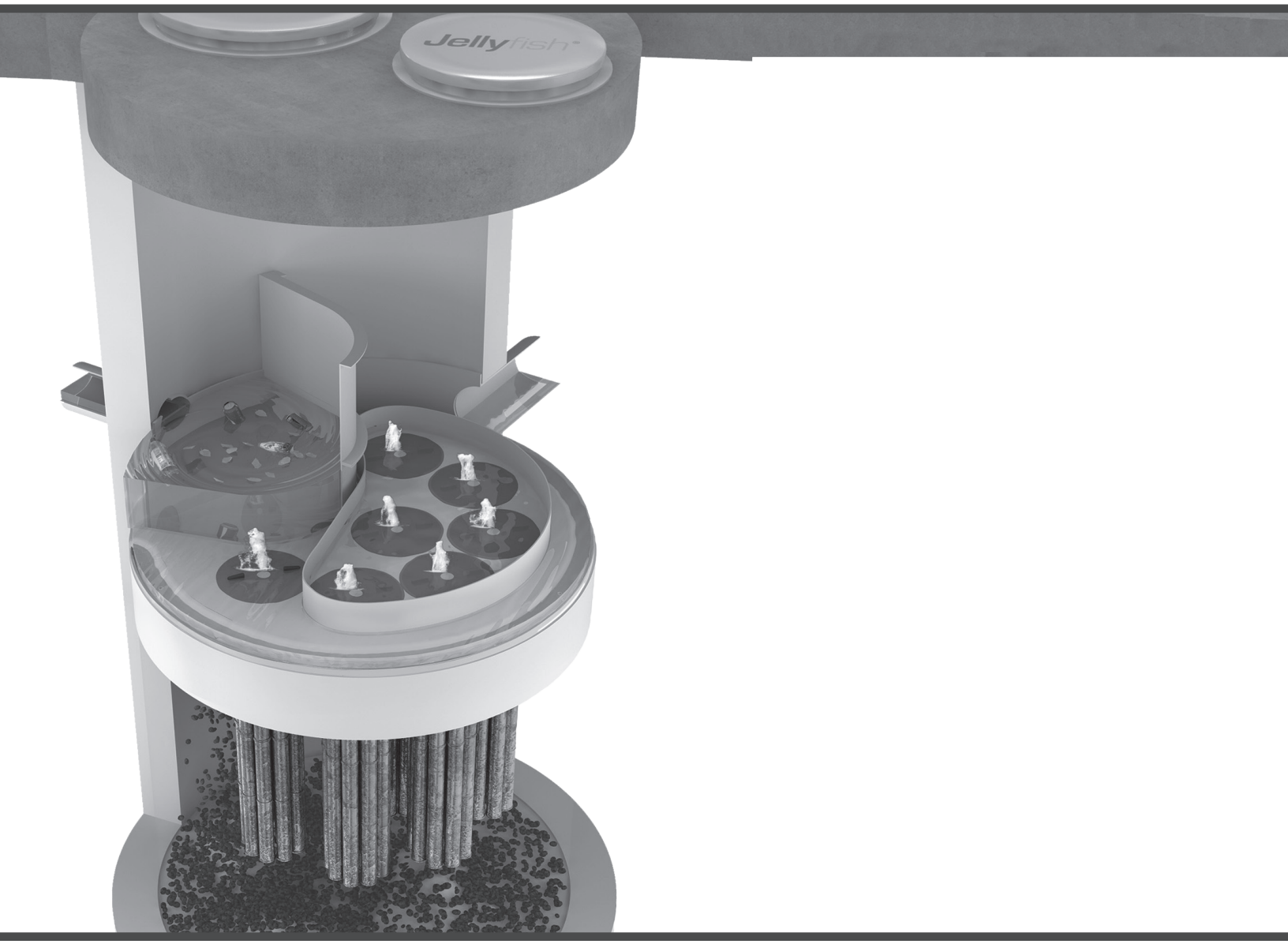

Jellyfish®

JELLYFISH® FILTER
INSPECTION & MAINTENANCE GUIDE

Jellyfish units are often just one of many structures in a more comprehensive stormwater drainage and treatment system.

In order for maintenance of the Jellyfish filter to be successful, it is imperative that all other components be properly maintained. The maintenance and repair of upstream facilities should be carried out prior to Jellyfish maintenance activities.

In addition to considering upstream facilities, it is also important to correct any problems identified in the drainage area. Drainage area concerns may include: erosion problems, heavy oil loading, and discharges of inappropriate materials.

TABLE OF CONTENTS

Inspection and Maintenance Overview 3

Inspection Procedure.....3

Maintenance Procedure.....4

Cartridge Assembly & Cleaning.....5

Inspection Process 7

1.0 Inspection and Maintenance Overview

The primary purpose of the Jellyfish® Filter is to capture and remove pollutants from stormwater runoff. As with any filtration system, these pollutants must be removed to maintain the filter's maximum treatment performance. Regular inspection and maintenance are required to insure proper functioning of the system.

Maintenance frequencies and requirements are site specific and vary depending on pollutant loading. Additional maintenance activities may be required in the event of non-storm event runoff, such as base-flow or seasonal flow, an upstream chemical spill or due to excessive sediment loading from site erosion or extreme runoff events. It is a good practice to inspect the system after major storm events.

Inspection activities are typically conducted from surface observations and include:

- Observe if standing water is present
- Observe if there is any physical damage to the deck or cartridge lids
- Observe the amount of debris in the Maintenance Access Wall (MAW) or inlet bay for vault systems

Maintenance activities include:

- Removal of oil, floatable trash and debris
- Removal of collected sediments
- Rinsing and re-installing the filter cartridges
- Replace filter cartridge tentacles, as needed

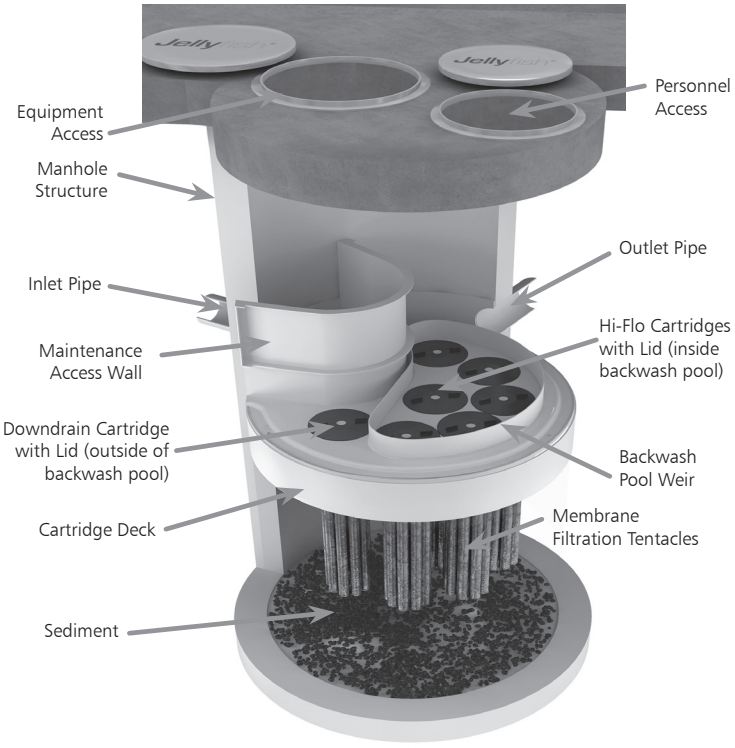

Note: Separator Skirt not shown

2.0 Inspection Timing

Inspection of the Jellyfish Filter is key in determining the maintenance requirements for, and to develop a history of, the site's pollutant loading characteristics. In general, inspections should be performed at the times indicated below; *or per the approved project stormwater quality documents (if applicable), whichever is more frequent*.

1. A minimum of quarterly inspections during the first year of operation to assess the sediment and floatable pollutant accumulation, and to ensure proper functioning of the system.
2. Inspection frequency in subsequent years is based on the inspection and maintenance plan developed in the first year of operation. Minimum frequency should be once per year.
3. Inspection is recommended after each major storm event.
4. Inspection is required immediately after an upstream oil, fuel or other chemical spill.

3.0 Inspection Procedure

The following procedure is recommended when performing inspections:

1. Provide traffic control measures as necessary.
2. Inspect the MAW or inlet bay for floatable pollutants such as trash, debris, and oil sheen.
3. Measure oil and sediment depth in several locations, by lowering a sediment probe until contact is made with the floor of the structure. Record sediment depth, and presences of any oil layers.
4. Inspect cartridge lids. Missing or damaged cartridge lids to be replaced.
5. Inspect the MAW (where appropriate), cartridge deck and receptacles, and backwash pool weir, for damaged or broken components.

3.1 Dry weather inspections

- Inspect the cartridge deck for standing water, and/or sediment on the deck.
- No standing water under normal operating conditions.
- Standing water inside the backwash pool, but not outside the backwash pool indicates, that the filter cartridges need to be rinsed.



Inspection Utilizing Sediment Probe

- Standing water outside the backwash pool is not anticipated and may indicate a backwater condition caused by high water elevation in the receiving water body, or possibly a blockage in downstream infrastructure.
- Any appreciable sediment (≥1/16") accumulated on the deck surface should be removed.

3.2 Wet weather inspections

- Observe the rate and movement of water in the unit. Note the depth of water above deck elevation within the MAW or inlet bay.
- Less than 6 inches, flow should be exiting the cartridge lids of each of the draindown cartridges (i.e. cartridges located outside the backwash pool).
- Greater than 6 inches, flow should be exiting the cartridge lids of each of the draindown cartridges and each of the hi-flo cartridges (i.e. cartridges located inside the backwash pool), and water should be overflowing the backwash pool weir.
- 18 inches or greater and relatively little flow is exiting the cartridge lids and outlet pipe, this condition indicates that the filter cartridges need to be rinsed.

4.0 Maintenance Requirements

Required maintenance for the Jellyfish Filter is based upon results of the most recent inspection, historical maintenance records, or the site specific water quality management plan; whichever is more frequent. In general, maintenance requires some combination of the following:

1. Sediment removal for depths reaching 12 inches or greater, or within 3 years of the most recent sediment cleaning, whichever occurs sooner.
2. Floatable trash, debris, and oil removal.
3. Deck cleaned and free from sediment.
4. Filter cartridges rinsed and re-installed as required by the most recent inspection results, or within 12 months of the most recent filter rinsing, whichever occurs sooner.
5. Replace tentacles if rinsing does not restore adequate hydraulic capacity, remove accumulated sediment, or if damaged or missing. It is recommended that tentacles should remain in service no longer than 5 years before replacement.
6. Damaged or missing cartridge deck components must be repaired or replaced as indicated by results of the most recent inspection.
7. The unit must be cleaned out and filter cartridges inspected immediately after an upstream oil, fuel, or chemical spill. Filter cartridge tentacles should be replaced if damaged or compromised by the spill.

5.0 Maintenance Procedure

The following procedures are recommended when maintaining the Jellyfish Filter:

1. Provide traffic control measures as necessary.
2. Open all covers and hatches. Use ventilation equipment as required, according to confined space entry procedures. *Caution: Dropping objects onto the cartridge deck may cause damage*.
3. Perform Inspection Procedure prior to maintenance activity.
4. To access the cartridge deck for filter cartridge service, descend into the structure and step directly onto the deck. Caution: Do not step onto the maintenance access wall (MAW) or backwash pool weir, as damage may result. Note that the cartridge deck may be slippery.
5. Maximum weight of maintenance crew and equipment on the cartridge deck not to exceed 450 lbs.

5.1 Filter Cartridge Removal

1. Remove a cartridge lid.
2. Remove cartridges from the deck using the lifting loops in the cartridge head plate. Rope or a lifting device (available from Contech) should be used. *Caution: Should a snag occur, do not force the cartridge upward as damage to the tentacles may result. Wet cartridges typically weigh between 100 and 125 lbs*.
3. Replace and secure the cartridge lid on the exposed empty receptacle as a safety precaution. Contech does not recommend exposing more than one empty cartridge receptacle at a time.

5.2 Filter Cartridge Rinsing

1. Remove all 11 tentacles from the cartridge head plate. Take care not to lose or damage the O-ring seal as well as the plastic threaded nut and connector.

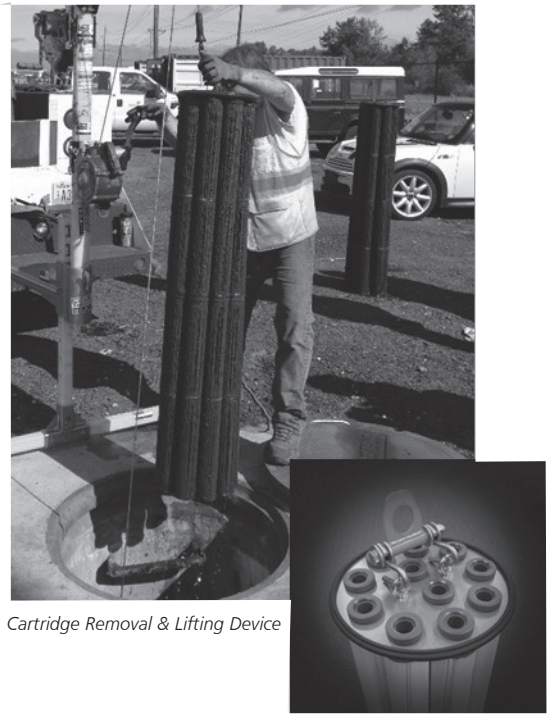

Cartridge Removal & Lifting Device

2. Position tentacles in a container (or over the MAW), with the threaded connector (open end) facing down, so rinse water is flushed through the membrane and captured in the container.
3. Using the Jellyfish rinse tool (available from Contech) or a low-pressure garden hose sprayer, direct water spray onto the tentacle membrane, sweeping from top to bottom along the length of the tentacle. Rinse until all sediment is removed from the membrane. *Caution: Do not use a high pressure sprayer or focused stream of water on the membrane. Excessive water pressure may damage the membrane*.

4. Collected rinse water is typically removed by vacuum hose.
5. Reassemble cartridges as detailed later in this document. Reuse O-rings and nuts, ensuring proper placement on each tentacle.

5.3 Sediment and Flotables Extraction

1. Perform vacuum cleaning of the Jellyfish Filter only after filter cartridges have been removed from the system. Access the lower chamber for vacuum cleaning only through the maintenance access wall (MAW) opening. Be careful not to damage the flexible plastic separator skirt that is attached to the underside of the deck on manhole systems. Do not lower the vacuum wand through a cartridge receptacle, as damage to the receptacle will result.
2. Vacuum floatable trash, debris, and oil, from the MAW opening or inlet bay. Alternatively, floatable solids may be removed by a net or skimmer.



Vacuuming Sump Through MAW

3. Pressure wash cartridge deck and receptacles to remove all sediment and debris. Sediment should be rinsed into the sump area. Take care not to flush rinse water into the outlet pipe.
4. Remove water from the sump area. Vacuum or pump equipment should only be introduced through the MAW or inlet bay.
5. Remove the sediment from the bottom of the unit through the MAW or inlet bay opening.

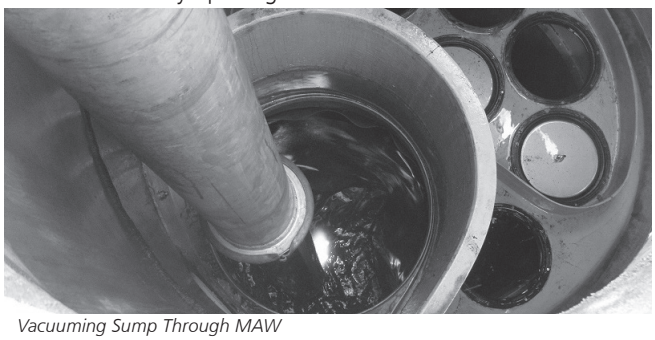

Vacuuming Sump Through MAW

6. For larger diameter Jellyfish Filter manholes (≥8-ft) and some vaults complete sediment removal may be facilitated by removing a cartridge lid from an empty receptacle and inserting a jetting wand (not a vacuum wand) through the receptacle. Use the sprayer to rinse loosened sediment toward the vacuum hose in the MAW opening, being careful not to damage the receptacle.

5.4 Filter Cartridge Reinstallation and Replacement

1. Cartridges should be installed after the deck has been cleaned. It is important that the receptacle surfaces be free from grit and debris.
2. Remove cartridge lid from deck and carefully lower the filter cartridge into the receptacle until head plate gasket is seated squarely in receptacle. ***Caution: Do not force the cartridge downward; damage may occur.***
3. Replace the cartridge lid and check to see that both male threads are properly seated before rotating approximately 1/3 of a full rotation until firmly seated. Use of an approved rim gasket lubricant may facilitate installation. See next page for additional details.
4. If rinsing is ineffective in removing sediment from the tentacles, or if tentacles are damaged, provisions must be made to replace the spent or damaged tentacles with new tentacles. Contact Contech to order replacement tentacles.

5.5 Chemical Spills

Caution: If a chemical spill has been captured, do not attempt maintenance. Immediately contact the local hazard response agency and contact Contech.

5.6 Material Disposal

The accumulated sediment found in stormwater treatment and conveyance systems must be handled and disposed of in accordance with regulatory protocols. It is possible for sediments to contain measurable concentrations of heavy metals and organic chemicals (such as pesticides and petroleum products). Areas with the greatest potential for high pollutant loading include industrial areas and heavily traveled roads. Sediments and water must be disposed of in accordance with all applicable waste disposal regulations. When scheduling maintenance, consideration must be made for the disposal of solid and liquid wastes. This typically requires coordination with a local landfill for solid waste disposal. For liquid waste disposal a number of options are available including a municipal vacuum truck decant facility, local waste water treatment plant or on-site treatment and discharge.

Jellyfish Filter Components & Filter Cartridge Assembly and Installation

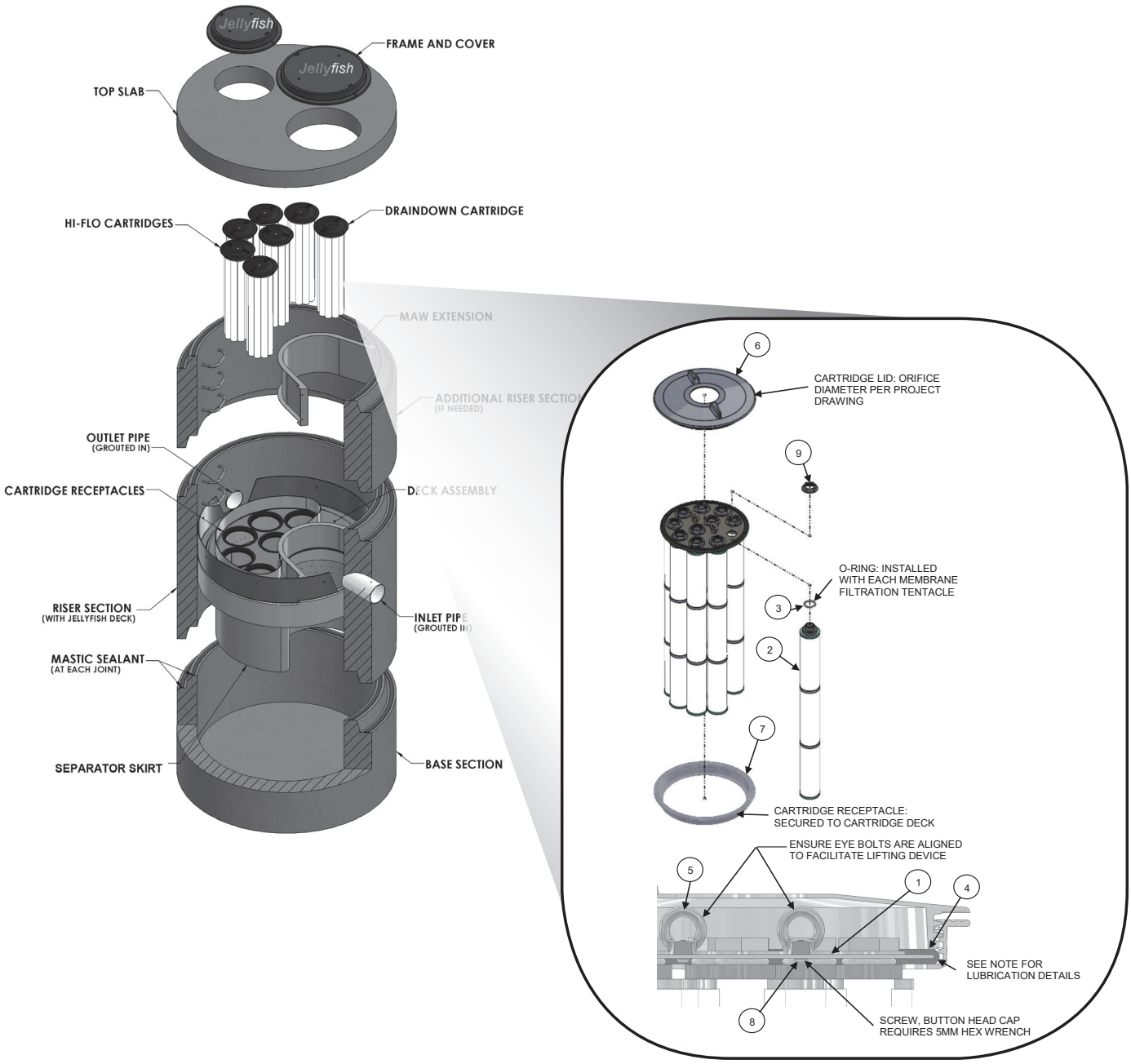

TABLE 1: BOM

ITEM NO.	DESCRIPTION
1	JF HEAD PLATE
2	JF TENTACLE
3	JF O-RING
4	JF HEAD PLATE GASKET
5	JF CARTRIDGE EYELET
6	JF 14IN COVER
7	JF RECEPTACLE
8	BUTTON HEAD CAP SCREW M6X14MM SS
9	JF CARTRIDGE NUT

TABLE 2: APPROVED GASKET LUBRICANTS

PART NO.	MFR	DESCRIPTION
78713	LA-CO	LUBRI-JOINT
40501	HERCULES	DUCK BUTTER
30600	OATEY	PIPE LUBRICANT
PSLUBXL1Q	PROSELECT	PIPE JOINT LUBRICANT

NOTES:

Head Plate Gasket Installation:
Install Head Plate Gasket (Item 4) onto the Head Plate (Item 1) and liberally apply a lubricant from Table 2: Approved Gasket Lubricants onto the gasket where it contacts the Receptacle (Item 7) and Cartridge Lide (ITem 6). Follow Lubricant manufacturer's instructions.

Lid Assembly:
Rotate Cartridge Lid counter-clockwise until both male threads drop down and properly seat. Then rotate Cartridge Lid clock-wise approximately one-third of a full rotation until Cartridge Lid is firmly secured, creating a watertight seal.

Jellyfish Filter Inspection and Maintenance Log

Owner:				Jellyfish Model No:		
Location:				GPS Coordinates:		
Land Use:	Commercial:		Industrial:		Service Station:	
	Roadway/Highway:		Airport:		Residential:	

Date/Time:						
Inspector:						
Maintenance Contractor:						
Visible Oil Present: (Y/N)						
Oil Quantity Removed:						
Floatable Debris Present: (Y/N)						
Floatable Debris Removed: (Y/N)						
Water Depth in Backwash Pool						
Draindown Cartridges externally rinsed and recommissioned: (Y/N)						
New tentacles put on Draindown Cartridges: (Y/N)						
Hi-Flo Cartridges externally rinsed and recommissioned: (Y/N)						
New tentacles put on Hi-Flo Cartridges: (Y/N)						
Sediment Depth Measured: (Y/N)						
Sediment Depth (inches or mm):						
Sediment Removed: (Y/N)						
Cartridge Lids intact: (Y/N)						
Observed Damage:						
Comments:						



Jellyfish®

CONTECH ENGINEERED SOLUTIONS

800.338.1122
www.ContechES.com

Support

- Drawings and specifications are available at www.conteches.com/jellyfish.
- Site-specific design support is available from Contech Engineered Solutions.
- Find a Certified Maintenance Provider at www.conteches.com/ccmp

© 2019 Contech Engineered Solutions LLC, a QUIKRETE Company

Contech Engineered Solutions LLC provides site solutions for the civil engineering industry. Contech's portfolio includes bridges, drainage, sanitary sewer, stormwater, wastewater treatment and earth stabilization products. For information on other Contech segment offerings, visit ContechES.com or call 800.338.1122

NOTHING IN THIS CATALOG SHOULD BE CONSTRUED AS A WARRANTY. APPLICATIONS SUGGESTED HEREIN ARE DESCRIBED ONLY TO HELP READERS MAKE THEIR OWN EVALUATIONS AND DECISIONS, AND ARE NEITHER GUARANTEES NOR WARRANTIES OF SUITABILITY FOR ANY APPLICATION. CONTECH MAKES NO WARRANTY WHATSOEVER, EXPRESS OR IMPLIED, RELATED TO THE APPLICATIONS, MATERIALS, COATINGS, OR PRODUCTS DISCUSSED HEREIN. ALL IMPLIED WARRANTIES OF MERCHANTABILITY AND ALL IMPLIED WARRANTIES OF FITNESS FOR ANY PARTICULAR PURPOSE ARE DISCLAIMED BY CONTECH. SEE CONTECH'S CONDITIONS OF SALE (AVAILABLE AT WWW.CONTECHES.COM/COS) FOR MORE INFORMATION.

The product(s) described may be protected by one or more of the following US patents: 5,322,629; 5,624,576; 5,707,527; 5,759,415; 5,788,848; 5,985,157; 6,027,639; 6,350,374; 6,406,218; 6,641,720; 6,511,595; 6,649,048; 6,991,114; 6,998,038; 7,186,058; related foreign patents or other patents pending.

Stormwater BMP Maintenance Log

BMP Structure	Inspector (Name)	Work Performed	Date Performed	Comments
Pavement Sweeping				
Catch Basins				
R-Tank System				
Jellyfish System				
Other				
Additional Comments:				

APPENDIX B: STORMWATER QUALITY CALCULATIONS

WOODARD & CURRAN COMMITMENT & INTEGRITY DRIVE RESULTS
41 HUTCHINS DRIVE
PORTLAND, MAINE 04102

CLIENT: PFDC
PROJECT: Phase 1 Development
CALCS BY: AL/AEF
DATE: 10/31/2019
PROJECT NO.: 227007.16

Redevelopment Treatment Calculations - Per Section 4.C.2.d of the MaineDEP Chapter 500 Rules

Area of Redevelopment (acres) = 7.88

a. Existing Pollutant Impact

Land Use	Pollutant Ranking	Land Area (Ac.)	Impact
High Use Roads/Parking Lot	5	0.13	0.64
Other Roads/Medium Use Parking Lot	4	2.85	11.42
Other Parking Lots/Flat Asphalt Roofs/Industrial Roofs	3	1.66	4.97
Other Roofs/Landscaped Area/Paved Walkway	2	2.37	4.73
Non-grass Landscaping/Stormwater	1	0.87	0.87
Forest/Meadow	0	0.00	0.00
			22.63

b. Proposed Pollutant Impact

Land Use	Pollutant Ranking	Land Area (Ac.)	Impact
High Use Roads/Parking Lot	5	0.76	3.80
Other Roads/Medium Use Parking Lot	4	2.14	8.55
Other Parking Lots/Flat Asphalt Roofs/Industrial Roofs	3	0.85	2.56
Other Roofs/Landscaped Area/Paved Walkway	2	3.93	7.86
Non-grass Landscaping/Stormwater	1	0.19	0.19
Forest/Meadow	0	0.00	0.00
			22.97

c. Existing Impact/Total Redevelopment Acres

2.9

d. Proposed Impact/Total Redevelopment Acres

2.9

e. Item D Minus Item C

0.0

Ranked Impact Change Due to Redevelopment	Percentage of Developed Area that Must be Treated
0.0 or less	0% (Stormwater projects)
	50% (Site projects)
≥ 0.0 to ≤ 1.0	60%
> 1.0 to ≤ 2.0	70%
> 2.0 to ≤ 3.0	80%
> 3.0	Same treatment level as for new development

Stormwater Treatment Summary	*Treatment Percentage*	*Treated Area (SF)*
Required	50%	171,525
Provided	58%	198,198

WQV Summary	*System 1*	*System 2*
Proposed Treated Area (SF)	84,114	114,084
Future Treated Areas (SF)	94,090	149,106
WQV Required (CF)	7,841	12,425
WQ Design Storm Event (in.)	1.00	1.00
WQV Provided (CF)	2,859	6,035
*WQ Storm Event Provided (in.)**	0.36	0.49

**Note: Based on recent discussions with Jeff Dennis, MaineDEP Watershed Management Unit Biologist, it is our understanding that the project will not be required to provide storage for the full Water Quality Volume (WQV) because the project ultimately discharges to the Fore River. Additional area will be directed to the treatment system as part of future phases of development. The WQ storm event that the proposed WQV will be able to accommodate has been calculated based upon the total future treated area.*

Contech Engineered Solutions LLC
71 US Rte 1, Suite F
Scarborough, ME 04074
Phone: (207) 885-6191
dadams@ContechES.com
www.ContechES.com

Ashley Fletcher, PE
Woodard & Curran
41 Hutchins Drive
Portland, ME 04102

November 5, 2019

RE: The Portland Complex Co. (Contech Reference No. 632415)
Review of Jellyfish Filter Design

Dear Ms. Fletcher:

The purpose of this letter is to document Contech Engineered Solutions' review of the plans and the proposed application of the Jellyfish filter as water quality units for the Portland Complex Co., Portland, ME.

Contech Engineered Solutions (Contech) has reviewed the Jellyfish designs for this project. We believe the Jellyfish filters are appropriate water quality solutions for this site. The Jellyfish filter system is approved for use by MEDEP meeting the General Standards (Section 4.B.) of the Stormwater Management Rules (Chapter 500) when sized, installed, and maintained in accordance with the provisions noted in the January 21, 2015 approval letter from the MEDEP.

The Jellyfish filter is designed in accordance with the 54" High Flow (HF) cartridge filtration rate of 80 gallons per minute and 54" Drain Down (DD) cartridge of 40 gallons per minute. The Engineer of Record's design for the WQ Volume should be detained and routed through the Jellyfish filter in accordance with the required offline bypass weir to route the flows above the WQv around the filter and have an emptying time of a minimum of 24-hours and a maximum of 48-hours.

Filter 1 – Jellyfish filter vault:
The engineer of record reports a Water Quality Storm Flow (Qwq) of 0.95 cfs outlet flow from an upstream detention system. In order to adequately treat the runoff from this area, Contech recommends a Jellyfish filter Peak Diversion vault model JFPD0806-5-2 with 5 HF cartridges and 2 DD cartridges.

Filter 2 – Jellyfish filter vault:
The engineer of record reports a Qwq of 1.63 cfs outlet flow from an upstream detention system. In order to adequately treat the runoff from this area, Contech recommends a Jellyfish filter Peak Diversion vault model JFPD0806-9-2 with 9 HF cartridges and 2 DD cartridges.

By request, Contech representatives can be on-site during the installation of Contech products. Contech requires at least two weeks' notice in advance of the requested visit. Our systems require periodic maintenance to continue operating properly. Given typical runoff pollutant loading rates, Contech recommends maintenance inspections on an annual basis.

These systems are expected to operate in accordance with Contech's design intent. Please feel free to contact me if you have any questions or concerns.

Sincerely,
David Adams, Sr. Design Engineer

APPENDIX C: HYDROCAD REPORT

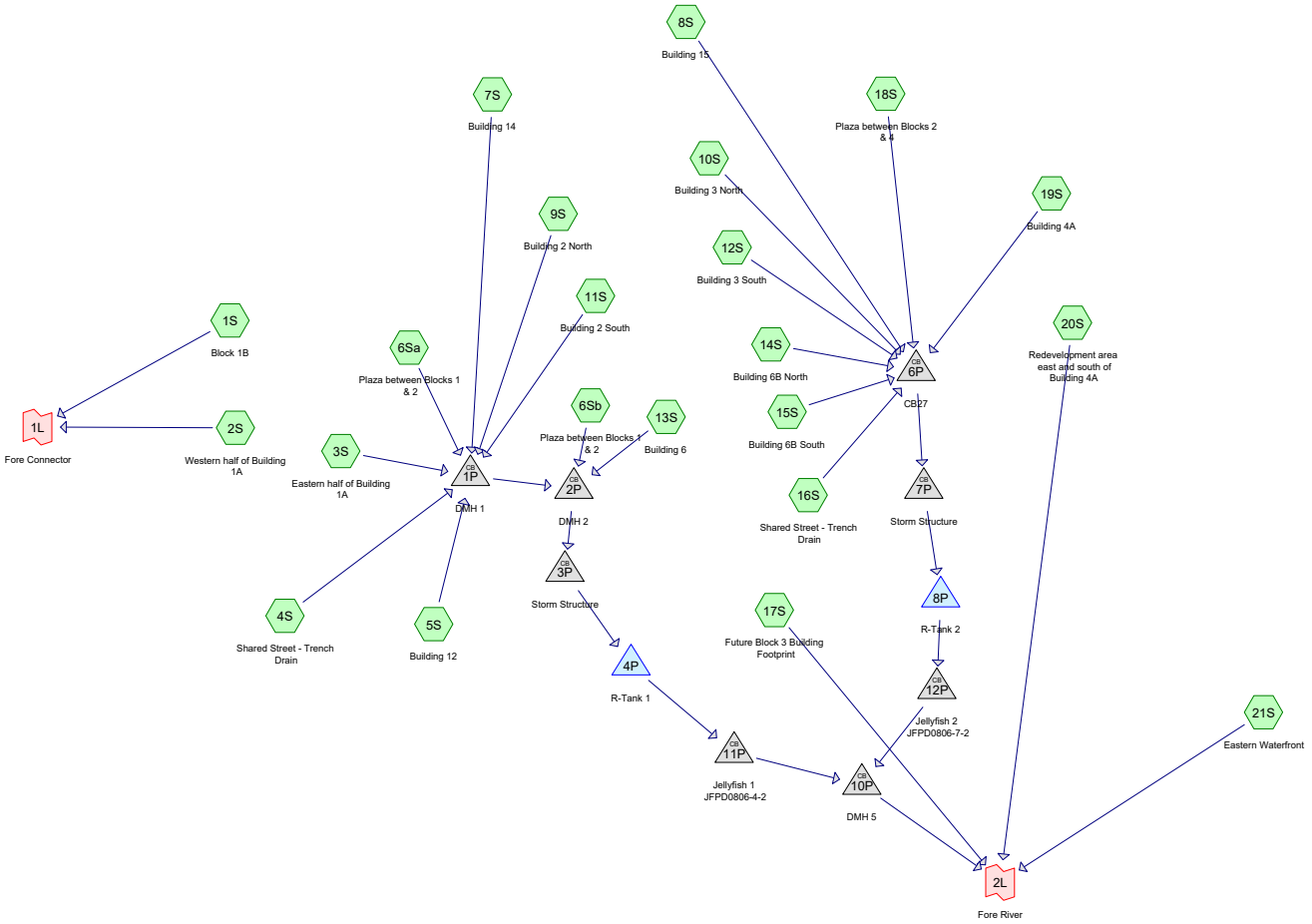

Subcat Reach Pond Link

Routing Diagram for C. Phase 1 Model for City

Prepared by Woodard Curran, Printed 11/6/2019

HydroCAD® 10.00-21 s/n 01204 © 2018 HydroCAD Software Solutions LLC

Time span=0.00-24.00 hrs, dt=0.05 hrs, 481 points
Runoff by SCS TR-20 method, UH=SCS, Weighted-CN
Reach routing by Stor-Ind+Trans method - Pond routing by Stor-Ind method

Subcatchment1S: Block 1B Runoff Area=27,045 sf 29.55% Impervious Runoff Depth=0.00"
Tc=6.0 min CN=56 Runoff=0.00 cfs 0.000 af

Subcatchment2S: Western half of Runoff Area=17,090 sf 100.00% Impervious Runoff Depth>0.79"
Tc=6.0 min CN=98 Runoff=0.34 cfs 0.026 af

Subcatchment3S: Eastern half of Runoff Area=17,090 sf 100.00% Impervious Runoff Depth>0.79"
Tc=6.0 min CN=98 Runoff=0.34 cfs 0.026 af

Subcatchment4S: Shared Street - Trench Runoff Area=24,890 sf 82.54% Impervious Runoff Depth>0.25"
Tc=6.0 min CN=88 Runoff=0.15 cfs 0.012 af

Subcatchment5S: Building 12 Runoff Area=3,244 sf 100.00% Impervious Runoff Depth>0.79"
Tc=6.0 min CN=98 Runoff=0.06 cfs 0.005 af

Subcatchment6Sa: Plaza between Blocks Runoff Area=20,337 sf 94.84% Impervious Runoff Depth>0.56"
Tc=6.0 min CN=95 Runoff=0.30 cfs 0.022 af

Subcatchment6Sb: Plaza between Blocks 1 Runoff Area=3,122 sf 71.75% Impervious Runoff Depth>0.10"
Tc=6.0 min CN=81 Runoff=0.00 cfs 0.001 af

Subcatchment7S: Building 14 Runoff Area=2,572 sf 100.00% Impervious Runoff Depth>0.79"
Tc=6.0 min CN=98 Runoff=0.05 cfs 0.004 af

Subcatchment8S: Building 15 Runoff Area=4,507 sf 100.00% Impervious Runoff Depth>0.79"
Tc=6.0 min CN=98 Runoff=0.09 cfs 0.007 af

Subcatchment9S: Building 2 North Runoff Area=4,695 sf 100.00% Impervious Runoff Depth>0.79"
Tc=6.0 min CN=98 Runoff=0.09 cfs 0.007 af

Subcatchment10S: Building 3 North Runoff Area=2,212 sf 100.00% Impervious Runoff Depth>0.79"
Tc=6.0 min CN=98 Runoff=0.04 cfs 0.003 af

Subcatchment11S: Building 2 South Runoff Area=4,855 sf 100.00% Impervious Runoff Depth>0.79"
Tc=6.0 min CN=98 Runoff=0.10 cfs 0.007 af

Subcatchment12S: Building 3 South Runoff Area=2,326 sf 100.00% Impervious Runoff Depth>0.79"
Tc=6.0 min CN=98 Runoff=0.05 cfs 0.004 af

Subcatchment13S: Building 6 Runoff Area=3,304 sf 100.00% Impervious Runoff Depth>0.79"
Tc=6.0 min CN=98 Runoff=0.07 cfs 0.005 af

Subcatchment14S: Building 6B North Runoff Area=3,873 sf 100.00% Impervious Runoff Depth>0.79"
Tc=6.0 min CN=98 Runoff=0.08 cfs 0.006 af

Subcatchment15S: Building 6B South Runoff Area=2,512 sf 100.00% Impervious Runoff Depth>0.79"
Tc=6.0 min CN=98 Runoff=0.05 cfs 0.004 af

Subcatchment16S: Shared Street - Trench Runoff Area=8,931 sf 100.00% Impervious Runoff Depth>0.79"
Tc=6.0 min CN=98 Runoff=0.18 cfs 0.014 af

Subcatchment17S: Future Block 3 Runoff Area=9,998 sf 100.00% Impervious Runoff Depth>0.79"
Tc=6.0 min CN=98 Runoff=0.20 cfs 0.015 af

Subcatchment18S: Plaza between Blocks Runoff Area=20,458 sf 99.48% Impervious Runoff Depth>0.79"
Tc=6.0 min CN=98 Runoff=0.41 cfs 0.031 af

Subcatchment19S: Building 4A Runoff Area=69,274 sf 100.00% Impervious Runoff Depth>0.79"
Tc=6.0 min CN=98 Runoff=1.38 cfs 0.105 af

Subcatchment20S: Redevelopment area Runoff Area=4,759 sf 52.30% Impervious Runoff Depth>0.00"
Tc=6.0 min CN=70 Runoff=0.00 cfs 0.000 af

Subcatchment21S: Eastern Waterfront Runoff Area=86,899 sf 73.10% Impervious Runoff Depth>0.11"
Tc=6.0 min CN=82 Runoff=0.13 cfs 0.019 af

Pond 1P: DMH 1 Peak Elev=10.33' Inflow=1.10 cfs 0.083 af
21.0" Round Culvert n=0.013 L=61.0' S=0.0038 '/' Outflow=1.10 cfs 0.083 af

Pond 2P: DMH 2 Peak Elev=10.05' Inflow=1.16 cfs 0.089 af
21.0" Round Culvert n=0.013 L=31.0' S=0.0048 '/' Outflow=1.16 cfs 0.089 af

Pond 3P: Storm Structure Peak Elev=9.75' Inflow=1.16 cfs 0.089 af
15.0" Round Culvert x 3.00 n=0.013 L=4.0' S=0.0000 '/' Outflow=1.16 cfs 0.089 af

Pond 4P: R-Tank 1 Peak Elev=8.12' Storage=857 cf Inflow=1.16 cfs 0.089 af
21.0" Round Culvert n=0.013 L=4.0' S=0.0000 '/' Outflow=0.80 cfs 0.083 af

Pond 6P: CB27 Peak Elev=10.30' Inflow=2.28 cfs 0.173 af
24.0" Round Culvert n=0.013 L=22.0' S=0.0064 '/' Outflow=2.28 cfs 0.173 af

Pond 7P: Storm Structure Peak Elev=9.95' Inflow=2.28 cfs 0.173 af
15.0" Round Culvert x 3.00 n=0.013 L=4.0' S=0.0000 '/' Outflow=2.28 cfs 0.173 af

Pond 8P: R-Tank 2 Peak Elev=8.47' Storage=2,089 cf Inflow=2.28 cfs 0.173 af
24.0" Round Culvert n=0.013 L=4.0' S=0.0000 '/' Outflow=1.36 cfs 0.159 af

Pond 10P: DMH 5 Peak Elev=7.67' Inflow=2.16 cfs 0.242 af
30.0" Round Culvert n=0.013 L=83.1' S=0.0100 '/' Outflow=2.16 cfs 0.242 af

Pond 11P: Jellyfish 1 JFPD0806-4-2 Peak Elev=8.99' Inflow=0.80 cfs 0.083 af
Outflow=0.80 cfs 0.083 af

Pond 12P: Jellyfish 2 JFPD0806-7-2 Peak Elev=9.28' Inflow=1.36 cfs 0.159 af
Outflow=1.36 cfs 0.159 af

Link 1L: Fore Connector Inflow=0.34 cfs 0.026 af
Primary=0.34 cfs 0.026 af

Link 2L: Fore River Inflow=2.41 cfs 0.276 af
Primary=2.41 cfs 0.276 af

Total Runoff Area = 7.897 ac Runoff Volume = 0.321 af Average Runoff Depth = 0.49"
14.85% Pervious = 1.173 ac 85.15% Impervious = 6.724 ac

Summary for Subcatchment 1S: Block 1B

Runoff = 0.00 cfs @ 0.00 hrs, Volume= 0.000 af, Depth= 0.00"

Runoff by SCS TR-20 method, UH=SCS, Weighted-CN, Time Span= 0.00-24.00 hrs, dt= 0.05 hrs
Type III 24-hr 1" Storm Event Rainfall=1.00"

	Area (sf)	CN	Description
*	7,991	98	Impervious
	19,054	39	>75% Grass cover, Good, HSG A
	27,045	56	Weighted Average
	19,054		70.45% Pervious Area
	7,991		29.55% Impervious Area

Tc (min)	Length (feet)	Slope (ft/ft)	Velocity (ft/sec)	Capacity (cfs)	Description
6.0					**Direct Entry,**

Subcatchment 1S: Block 1B

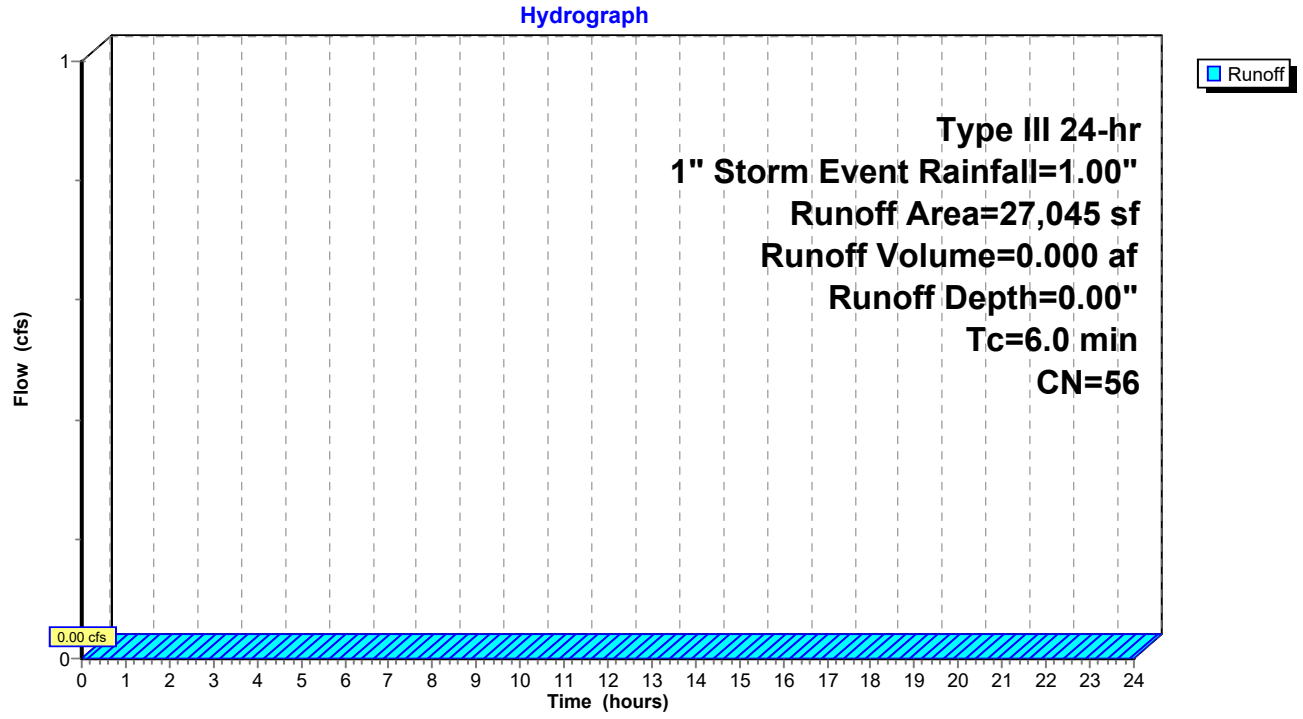

Summary for Subcatchment 2S: Western half of Building 1A

Runoff = 0.34 cfs @ 12.09 hrs, Volume= 0.026 af, Depth> 0.79"

Runoff by SCS TR-20 method, UH=SCS, Weighted-CN, Time Span= 0.00-24.00 hrs, dt= 0.05 hrs
Type III 24-hr 1" Storm Event Rainfall=1.00"

	Area (sf)	CN	Description
*	17,090	98	Roof
	17,090		100.00% Impervious Area

Tc (min)	Length (feet)	Slope (ft/ft)	Velocity (ft/sec)	Capacity (cfs)	Description
6.0					**Direct Entry,**

Subcatchment 2S: Western half of Building 1A

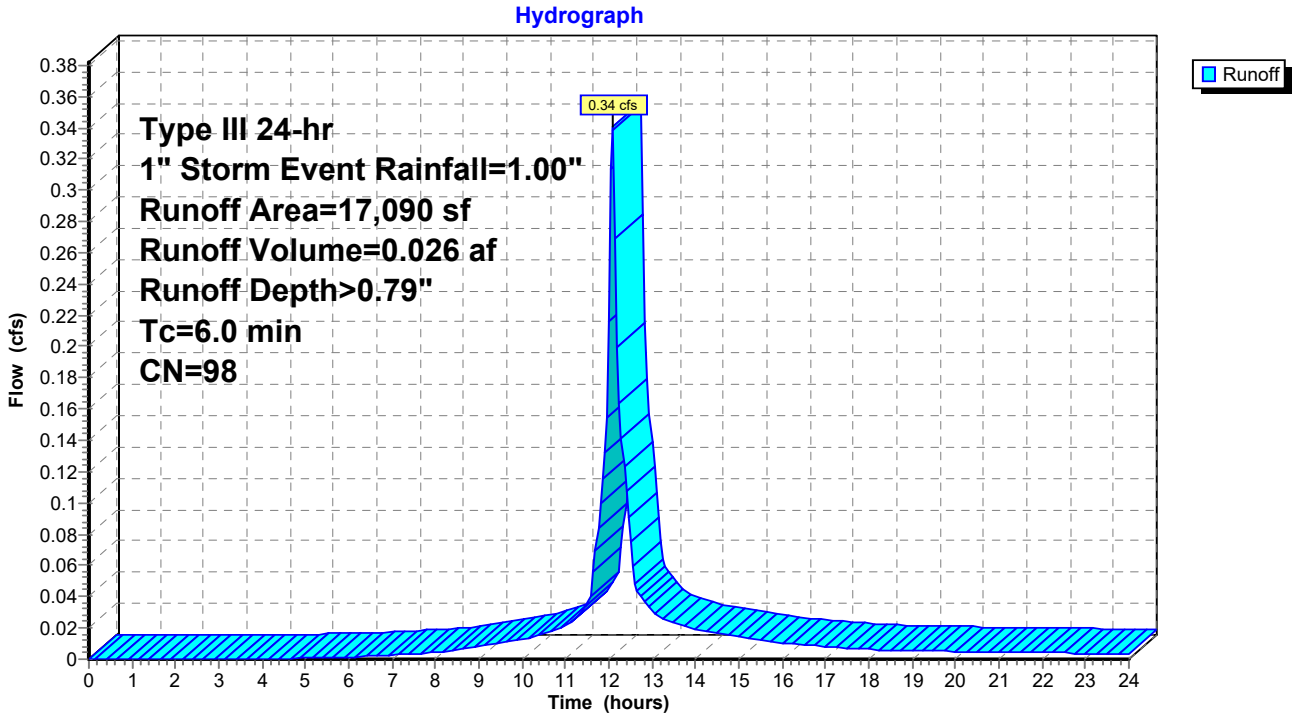

Summary for Subcatchment 3S: Eastern half of Building 1A

Runoff = 0.34 cfs @ 12.09 hrs, Volume= 0.026 af, Depth> 0.79"

Runoff by SCS TR-20 method, UH=SCS, Weighted-CN, Time Span= 0.00-24.00 hrs, dt= 0.05 hrs
Type III 24-hr 1" Storm Event Rainfall=1.00"

	Area (sf)	CN	Description
*	17,090	98	Roof
	17,090		100.00% Impervious Area

Tc (min)	Length (feet)	Slope (ft/ft)	Velocity (ft/sec)	Capacity (cfs)	Description
6.0					**Direct Entry,**

Subcatchment 3S: Eastern half of Building 1A

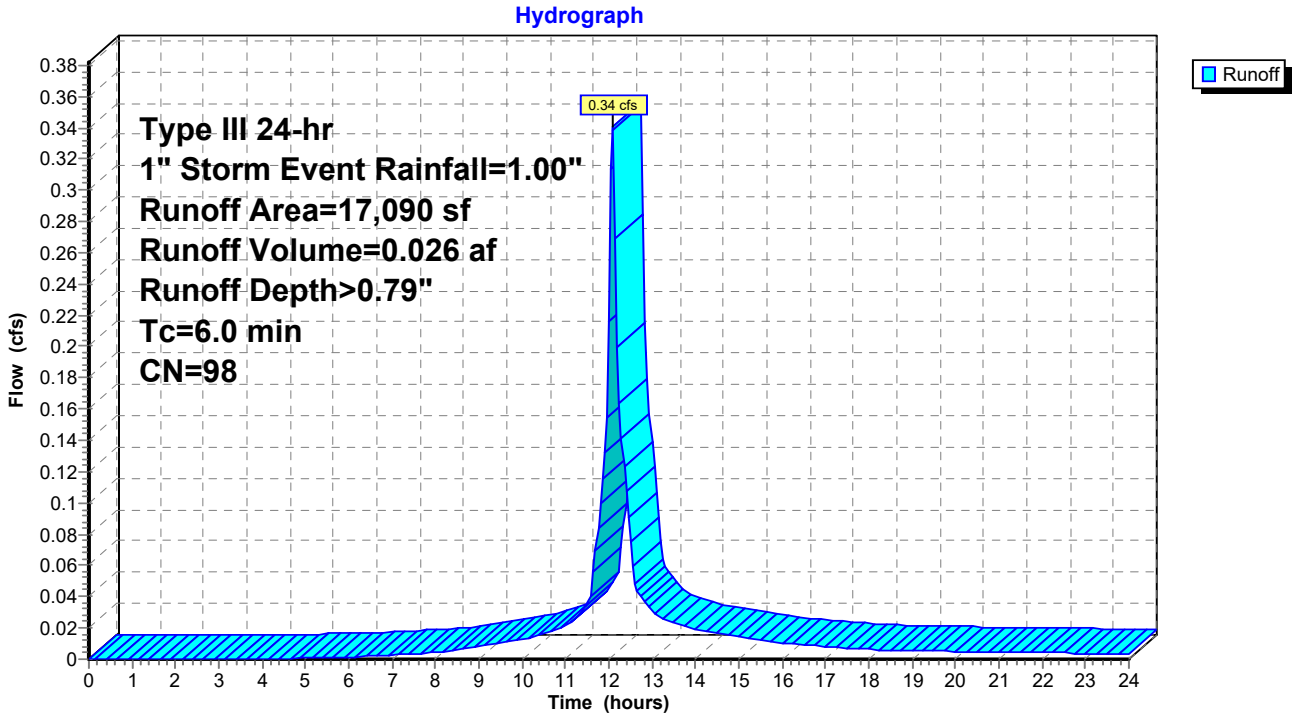

Summary for Subcatchment 4S: Shared Street - Trench Drain

Runoff = 0.15 cfs @ 12.10 hrs, Volume= 0.012 af, Depth> 0.25"

Runoff by SCS TR-20 method, UH=SCS, Weighted-CN, Time Span= 0.00-24.00 hrs, dt= 0.05 hrs
Type III 24-hr 1" Storm Event Rainfall=1.00"

	Area (sf)	CN	Description
	4,345	39	>75% Grass cover, Good, HSG A
*	20,545	98	Impervious Shared Street and Plaza
	24,890	88	Weighted Average
	4,345		17.46% Pervious Area
	20,545		82.54% Impervious Area

Tc (min)	Length (feet)	Slope (ft/ft)	Velocity (ft/sec)	Capacity (cfs)	Description
6.0					**Direct Entry,**

Subcatchment 4S: Shared Street - Trench Drain

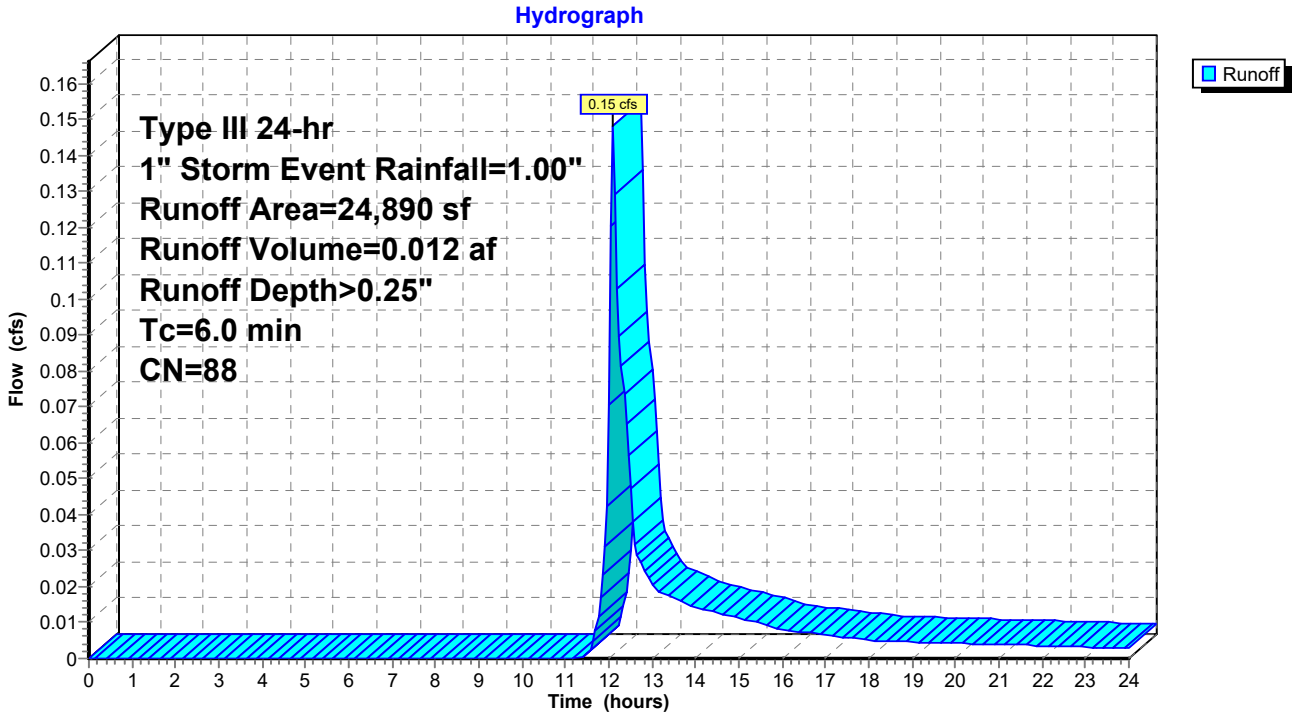

Summary for Subcatchment 5S: Building 12

Runoff = 0.06 cfs @ 12.09 hrs, Volume= 0.005 af, Depth> 0.79"

Runoff by SCS TR-20 method, UH=SCS, Weighted-CN, Time Span= 0.00-24.00 hrs, dt= 0.05 hrs
Type III 24-hr 1" Storm Event Rainfall=1.00"

	Area (sf)	CN	Description
*	3,244	98	Roof
	3,244		100.00% Impervious Area

Tc (min)	Length (feet)	Slope (ft/ft)	Velocity (ft/sec)	Capacity (cfs)	Description
6.0					**Direct Entry,**

Subcatchment 5S: Building 12

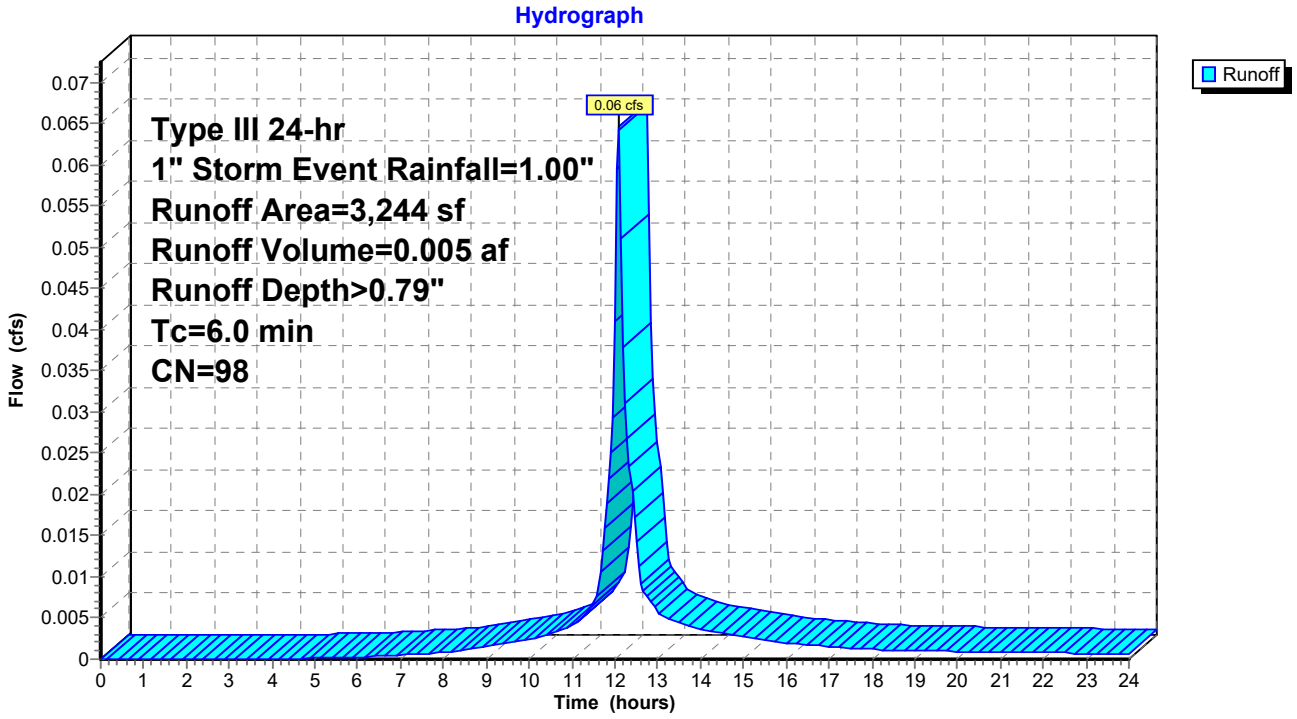

Summary for Subcatchment 6Sa: Plaza between Blocks 1 & 2

Runoff = 0.30 cfs @ 12.09 hrs, Volume= 0.022 af, Depth> 0.56"

Runoff by SCS TR-20 method, UH=SCS, Weighted-CN, Time Span= 0.00-24.00 hrs, dt= 0.05 hrs
Type III 24-hr 1" Storm Event Rainfall=1.00"

	Area (sf)	CN	Description
*	19,288	98	Impervious
	1,049	39	>75% Grass cover, Good, HSG A
	20,337	95	Weighted Average
	1,049		5.16% Pervious Area
	19,288		94.84% Impervious Area

Tc (min)	Length (feet)	Slope (ft/ft)	Velocity (ft/sec)	Capacity (cfs)	Description
6.0					**Direct Entry,**

Subcatchment 6Sa: Plaza between Blocks 1 & 2

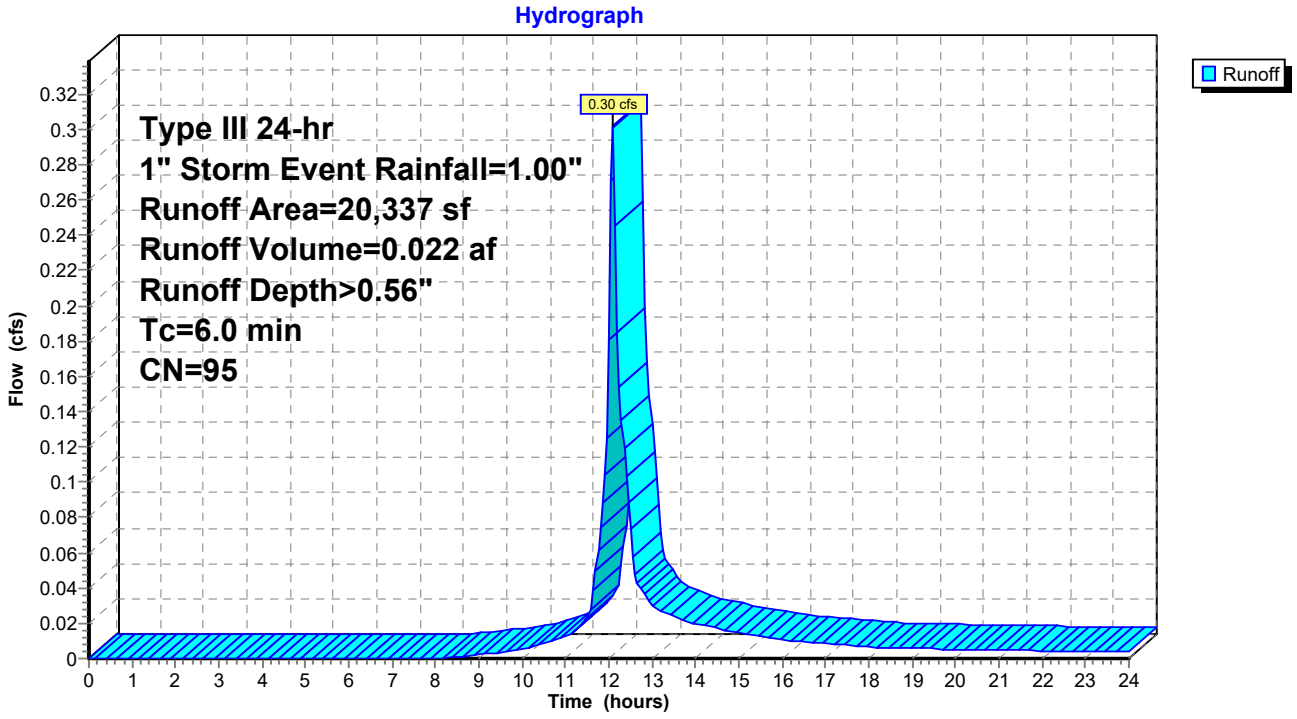

Summary for Subcatchment 6Sb: Plaza between Blocks 1 & 2

Runoff = 0.00 cfs @ 12.27 hrs, Volume= 0.001 af, Depth> 0.10"

Runoff by SCS TR-20 method, UH=SCS, Weighted-CN, Time Span= 0.00-24.00 hrs, dt= 0.05 hrs
Type III 24-hr 1" Storm Event Rainfall=1.00"

	Area (sf)	CN	Description
*	2,240	98	Impervious
	882	39	>75% Grass cover, Good, HSG A
	3,122	81	Weighted Average
	882		28.25% Pervious Area
	2,240		71.75% Impervious Area

Tc (min)	Length (feet)	Slope (ft/ft)	Velocity (ft/sec)	Capacity (cfs)	Description
6.0					**Direct Entry,**

Subcatchment 6Sb: Plaza between Blocks 1 & 2

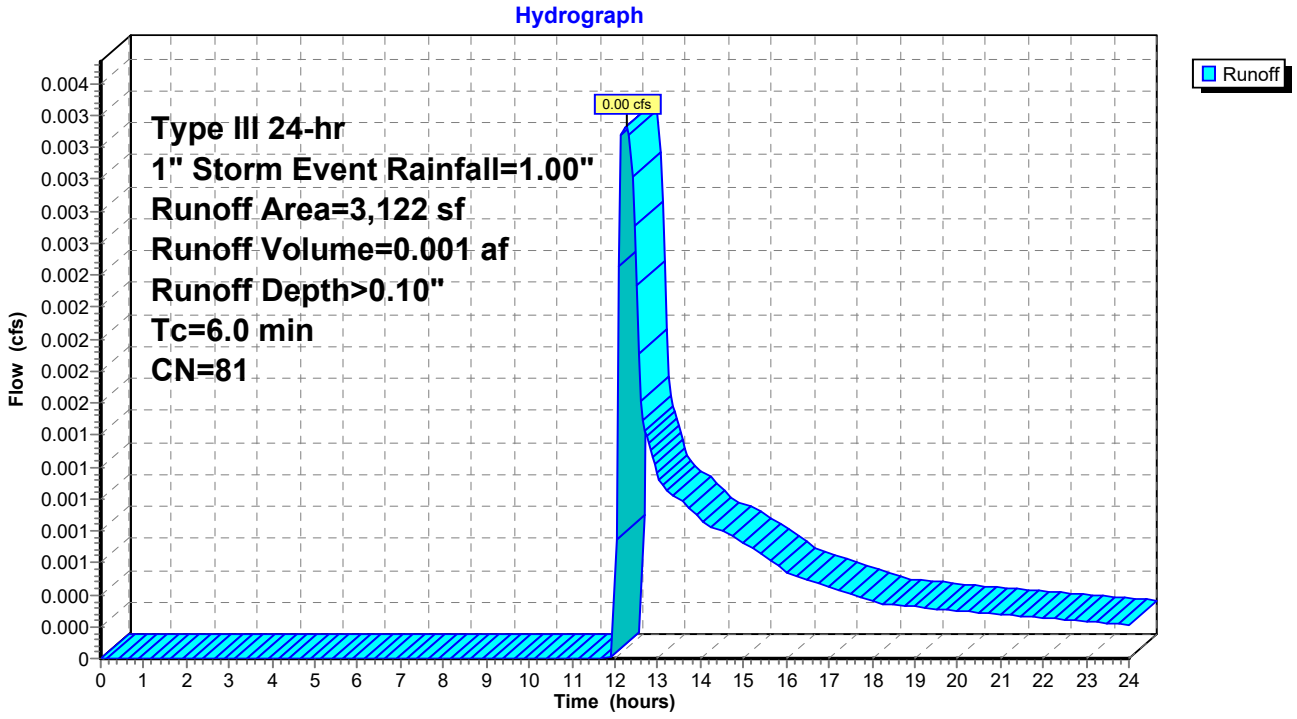

Summary for Subcatchment 7S: Building 14

Runoff = 0.05 cfs @ 12.09 hrs, Volume= 0.004 af, Depth> 0.79"

Runoff by SCS TR-20 method, UH=SCS, Weighted-CN, Time Span= 0.00-24.00 hrs, dt= 0.05 hrs
Type III 24-hr 1" Storm Event Rainfall=1.00"

	Area (sf)	CN	Description
*	2,572	98	Roof
	2,572		100.00% Impervious Area

Tc (min)	Length (feet)	Slope (ft/ft)	Velocity (ft/sec)	Capacity (cfs)	Description
6.0					**Direct Entry,**

Subcatchment 7S: Building 14

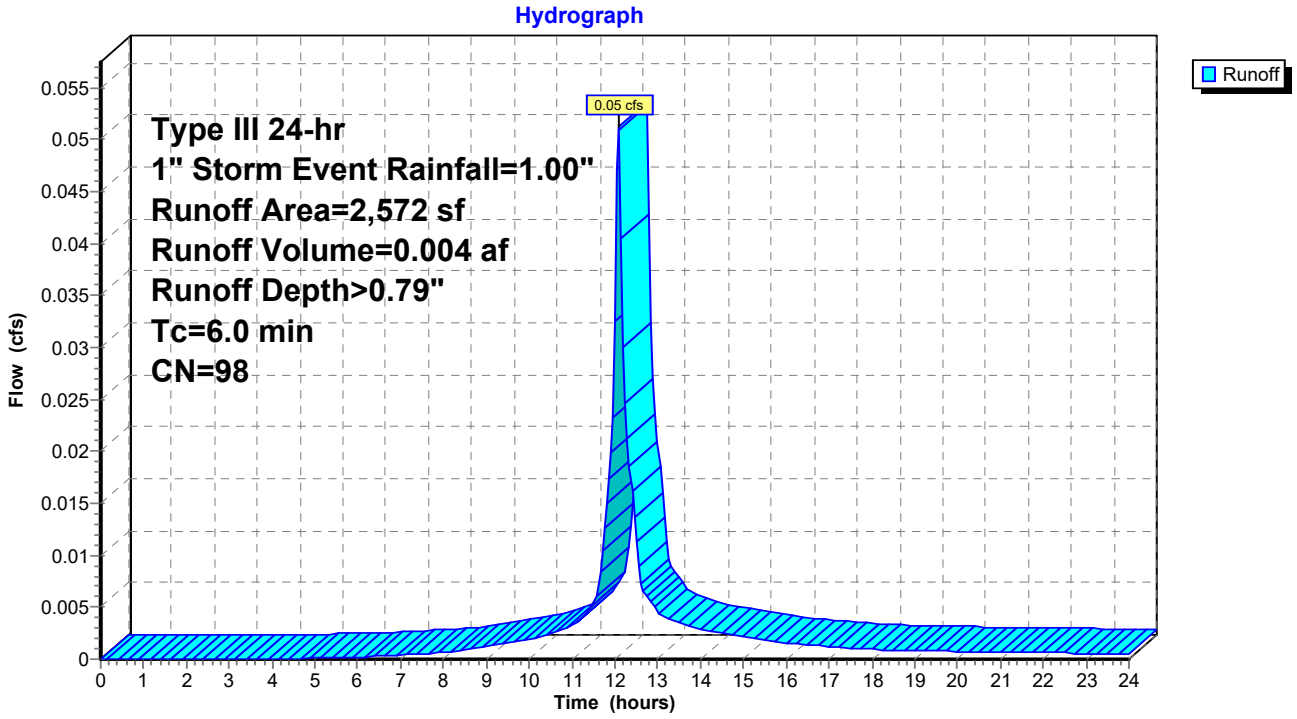

Summary for Subcatchment 8S: Building 15

Runoff = 0.09 cfs @ 12.09 hrs, Volume= 0.007 af, Depth> 0.79"

Runoff by SCS TR-20 method, UH=SCS, Weighted-CN, Time Span= 0.00-24.00 hrs, dt= 0.05 hrs
Type III 24-hr 1" Storm Event Rainfall=1.00"

	Area (sf)	CN	Description
*	4,507	98	Roof
	4,507		100.00% Impervious Area

Tc (min)	Length (feet)	Slope (ft/ft)	Velocity (ft/sec)	Capacity (cfs)	Description
6.0					**Direct Entry,**

Subcatchment 8S: Building 15

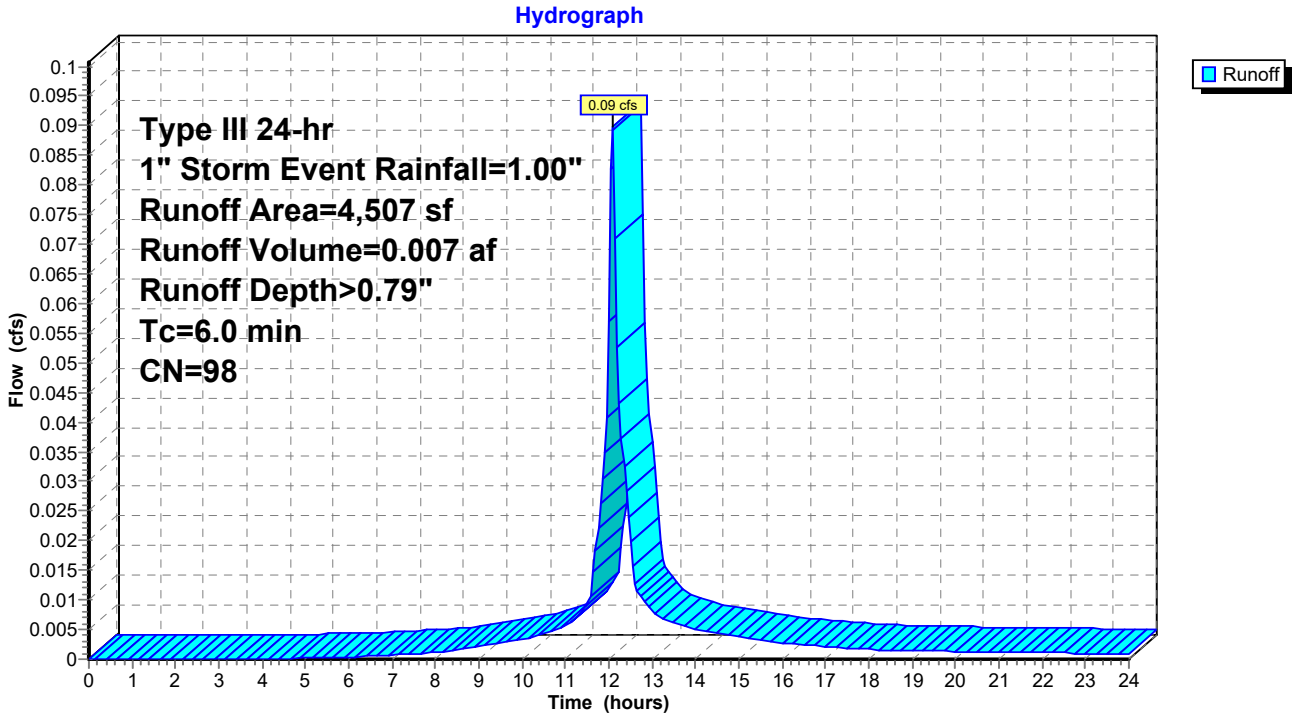

Summary for Subcatchment 9S: Building 2 North

Runoff = 0.09 cfs @ 12.09 hrs, Volume= 0.007 af, Depth> 0.79"

Runoff by SCS TR-20 method, UH=SCS, Weighted-CN, Time Span= 0.00-24.00 hrs, dt= 0.05 hrs
Type III 24-hr 1" Storm Event Rainfall=1.00"

	Area (sf)	CN	Description
*	4,695	98	Roof
	4,695		100.00% Impervious Area

Tc (min)	Length (feet)	Slope (ft/ft)	Velocity (ft/sec)	Capacity (cfs)	Description
6.0					**Direct Entry,**

Subcatchment 9S: Building 2 North

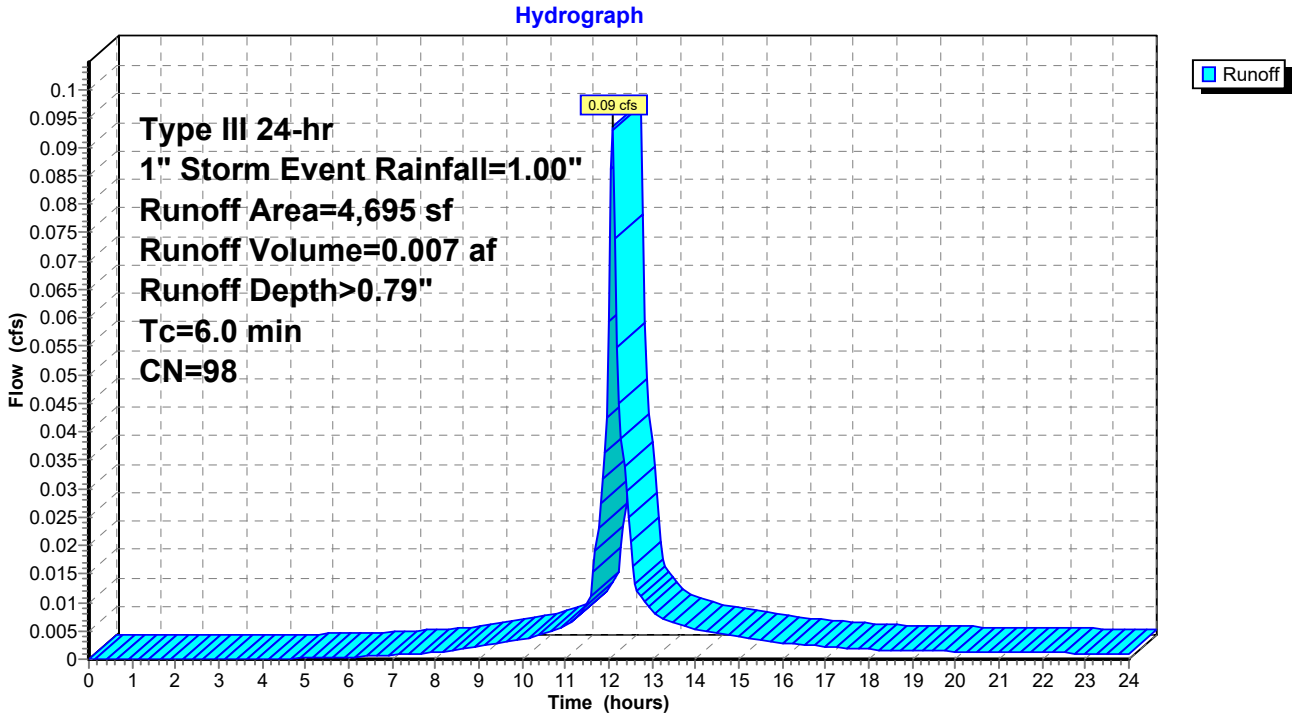

Summary for Subcatchment 10S: Building 3 North

Runoff = 0.04 cfs @ 12.09 hrs, Volume= 0.003 af, Depth> 0.79"

Runoff by SCS TR-20 method, UH=SCS, Weighted-CN, Time Span= 0.00-24.00 hrs, dt= 0.05 hrs
Type III 24-hr 1" Storm Event Rainfall=1.00"

	Area (sf)	CN	Description
*	2,212	98	Roof
	2,212		100.00% Impervious Area

Tc (min)	Length (feet)	Slope (ft/ft)	Velocity (ft/sec)	Capacity (cfs)	Description
6.0					**Direct Entry,**

Subcatchment 10S: Building 3 North

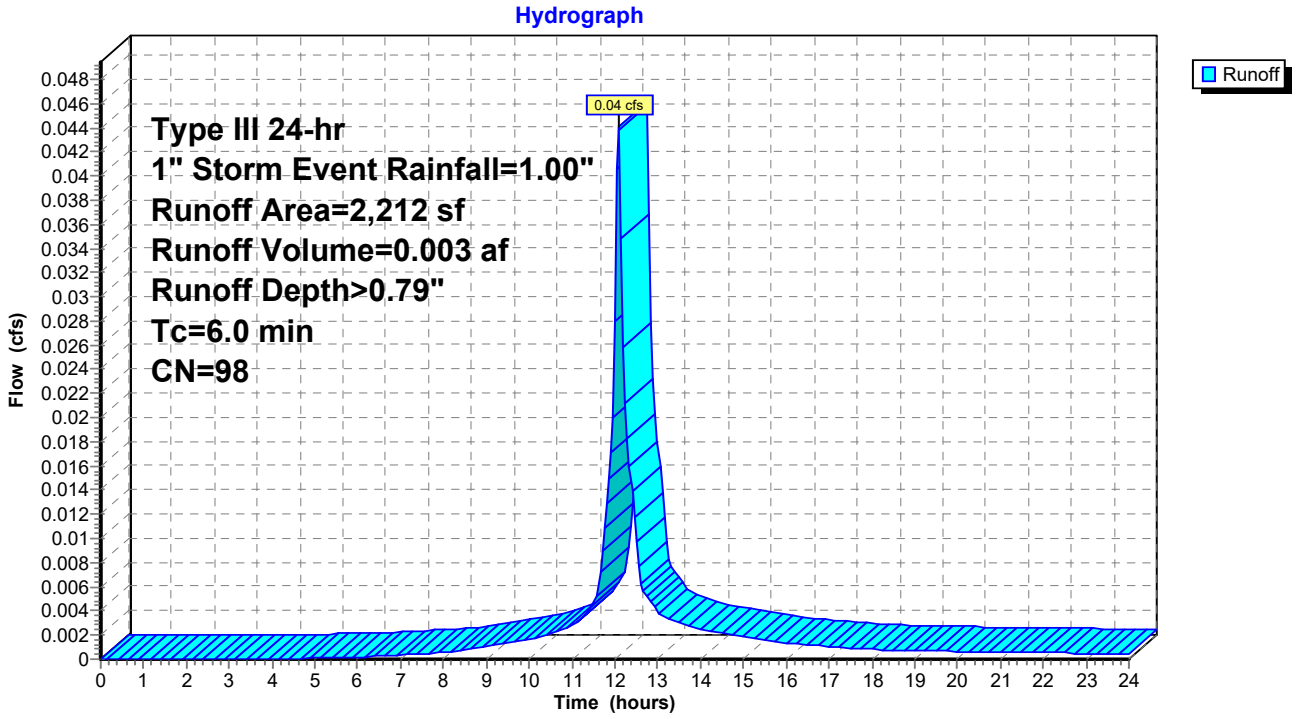

Summary for Subcatchment 11S: Building 2 South

Runoff = 0.10 cfs @ 12.09 hrs, Volume= 0.007 af, Depth> 0.79"

Runoff by SCS TR-20 method, UH=SCS, Weighted-CN, Time Span= 0.00-24.00 hrs, dt= 0.05 hrs
Type III 24-hr 1" Storm Event Rainfall=1.00"

	Area (sf)	CN	Description
*	4,855	98	Roof
	4,855		100.00% Impervious Area

Tc (min)	Length (feet)	Slope (ft/ft)	Velocity (ft/sec)	Capacity (cfs)	Description
6.0					**Direct Entry,**

Subcatchment 11S: Building 2 South

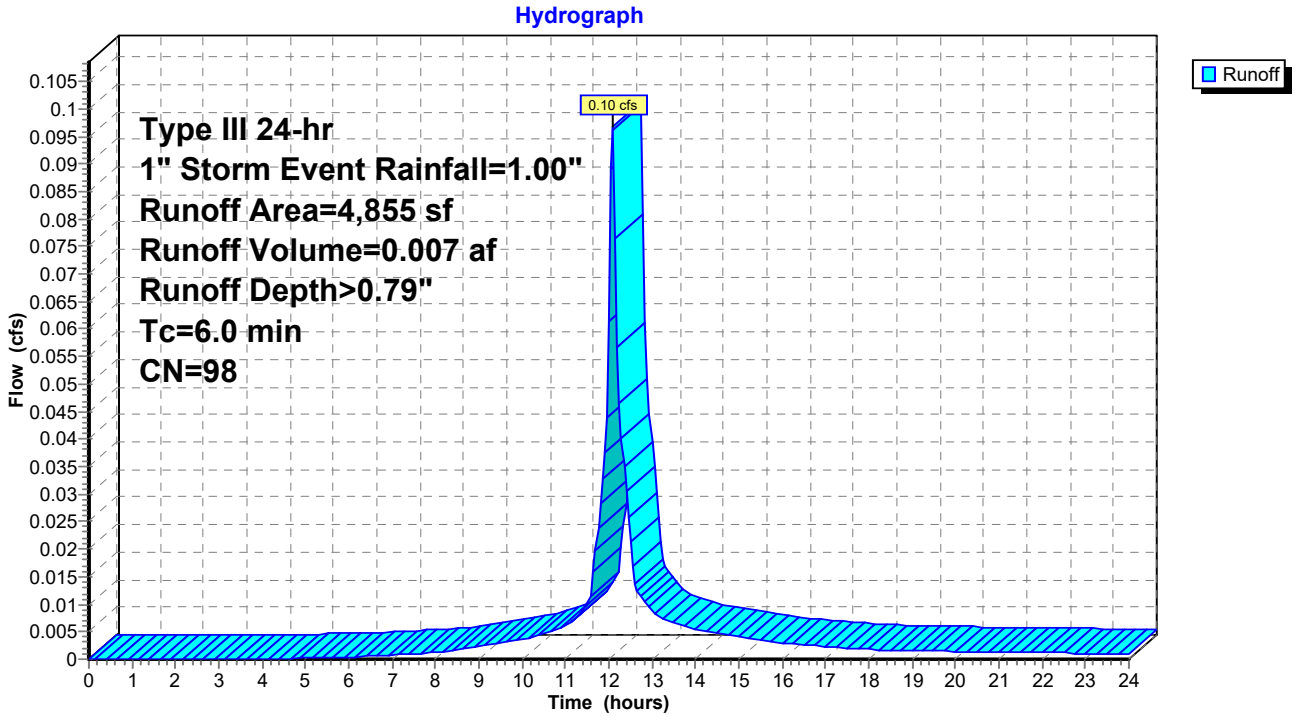

Summary for Subcatchment 12S: Building 3 South

Runoff = 0.05 cfs @ 12.09 hrs, Volume= 0.004 af, Depth> 0.79"

Runoff by SCS TR-20 method, UH=SCS, Weighted-CN, Time Span= 0.00-24.00 hrs, dt= 0.05 hrs
Type III 24-hr 1" Storm Event Rainfall=1.00"

	Area (sf)	CN	Description
*	2,326	98	Roof
	2,326		100.00% Impervious Area

Tc (min)	Length (feet)	Slope (ft/ft)	Velocity (ft/sec)	Capacity (cfs)	Description
6.0					**Direct Entry,**

Subcatchment 12S: Building 3 South

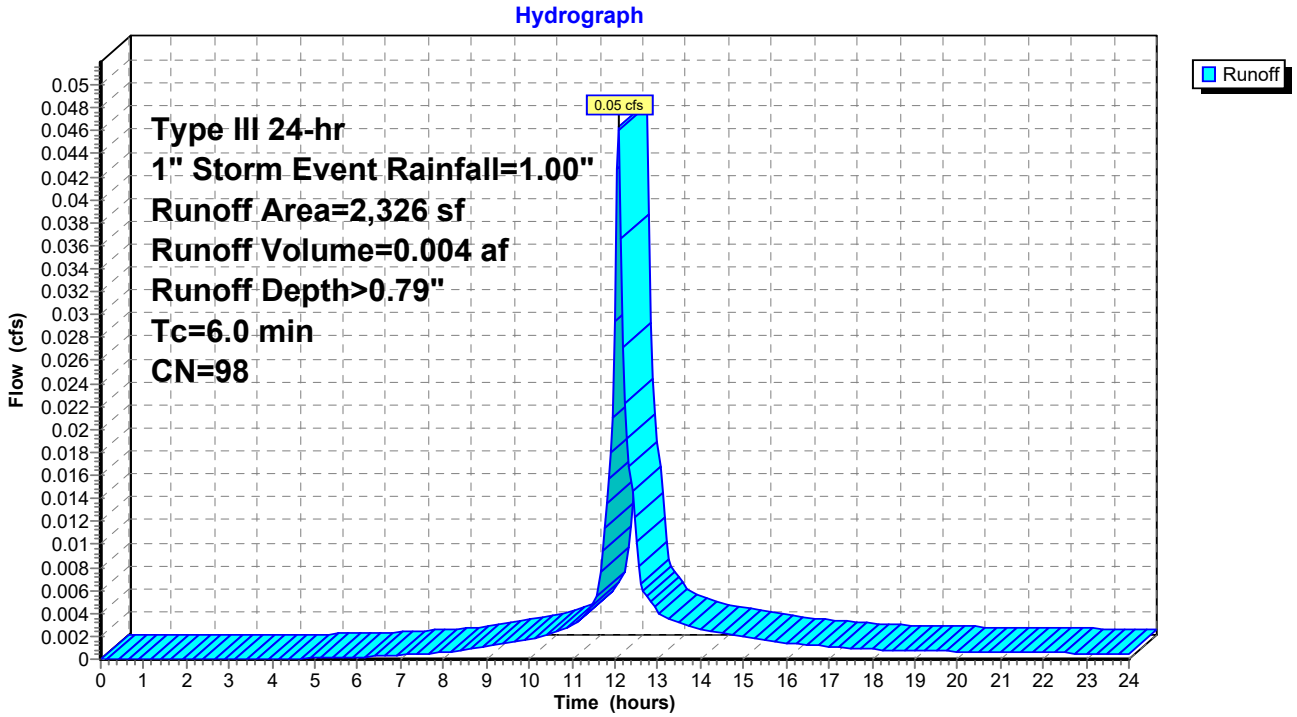

Summary for Subcatchment 13S: Building 6

Runoff = 0.07 cfs @ 12.09 hrs, Volume= 0.005 af, Depth> 0.79"

Runoff by SCS TR-20 method, UH=SCS, Weighted-CN, Time Span= 0.00-24.00 hrs, dt= 0.05 hrs
Type III 24-hr 1" Storm Event Rainfall=1.00"

	Area (sf)	CN	Description
*	3,304	98	Roof
	3,304		100.00% Impervious Area

Tc (min)	Length (feet)	Slope (ft/ft)	Velocity (ft/sec)	Capacity (cfs)	Description
6.0					**Direct Entry,**

Subcatchment 13S: Building 6

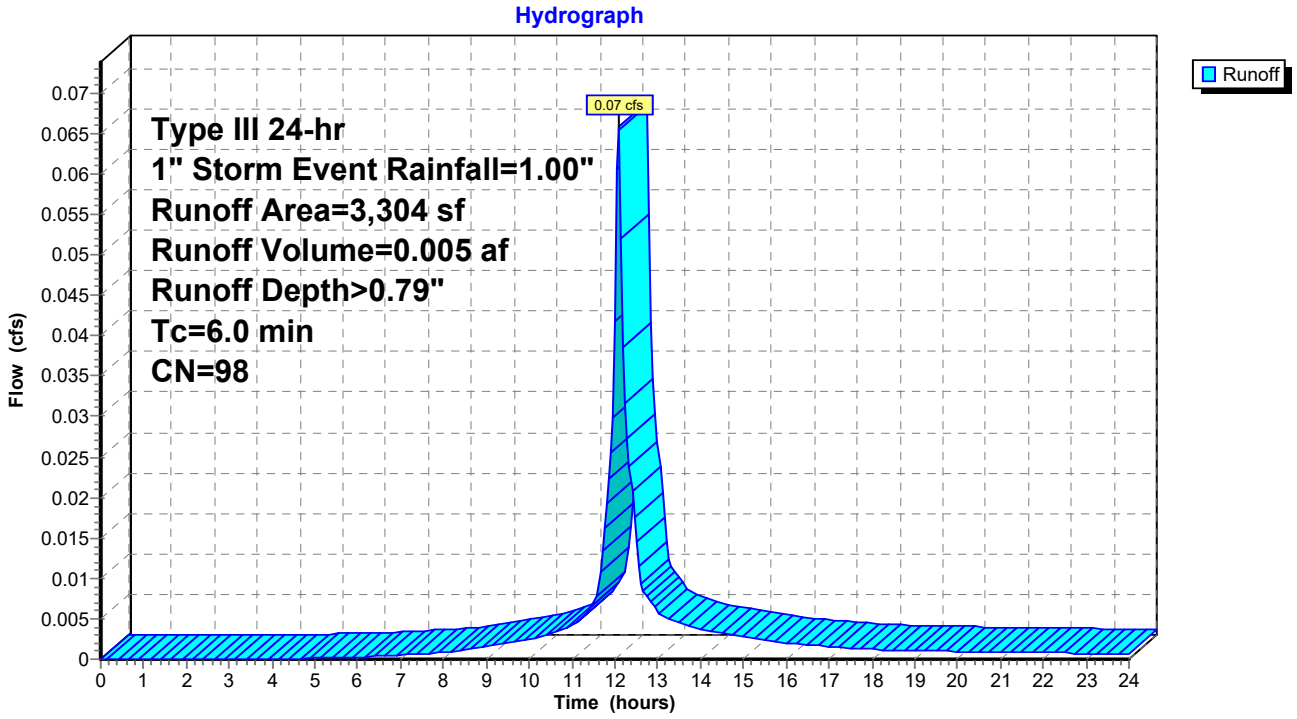

Summary for Subcatchment 14S: Building 6B North

Runoff = 0.08 cfs @ 12.09 hrs, Volume= 0.006 af, Depth> 0.79"

Runoff by SCS TR-20 method, UH=SCS, Weighted-CN, Time Span= 0.00-24.00 hrs, dt= 0.05 hrs
Type III 24-hr 1" Storm Event Rainfall=1.00"

	Area (sf)	CN	Description
*	3,873	98	Roof
	3,873		100.00% Impervious Area

Tc (min)	Length (feet)	Slope (ft/ft)	Velocity (ft/sec)	Capacity (cfs)	Description
6.0					**Direct Entry,**

Subcatchment 14S: Building 6B North

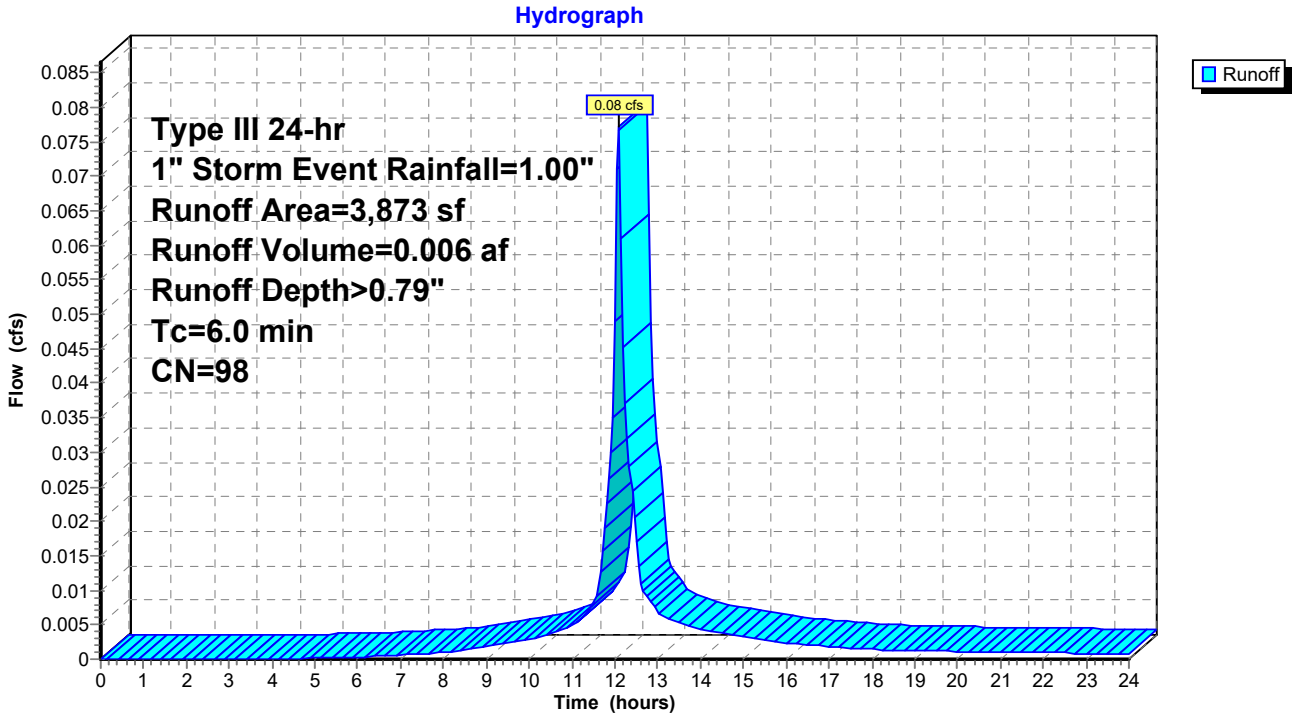

Summary for Subcatchment 15S: Building 6B South

Runoff = 0.05 cfs @ 12.09 hrs, Volume= 0.004 af, Depth> 0.79"

Runoff by SCS TR-20 method, UH=SCS, Weighted-CN, Time Span= 0.00-24.00 hrs, dt= 0.05 hrs
Type III 24-hr 1" Storm Event Rainfall=1.00"

	Area (sf)	CN	Description
*	2,512	98	Roof
	2,512		100.00% Impervious Area

Tc (min)	Length (feet)	Slope (ft/ft)	Velocity (ft/sec)	Capacity (cfs)	Description
6.0					**Direct Entry,**

Subcatchment 15S: Building 6B South

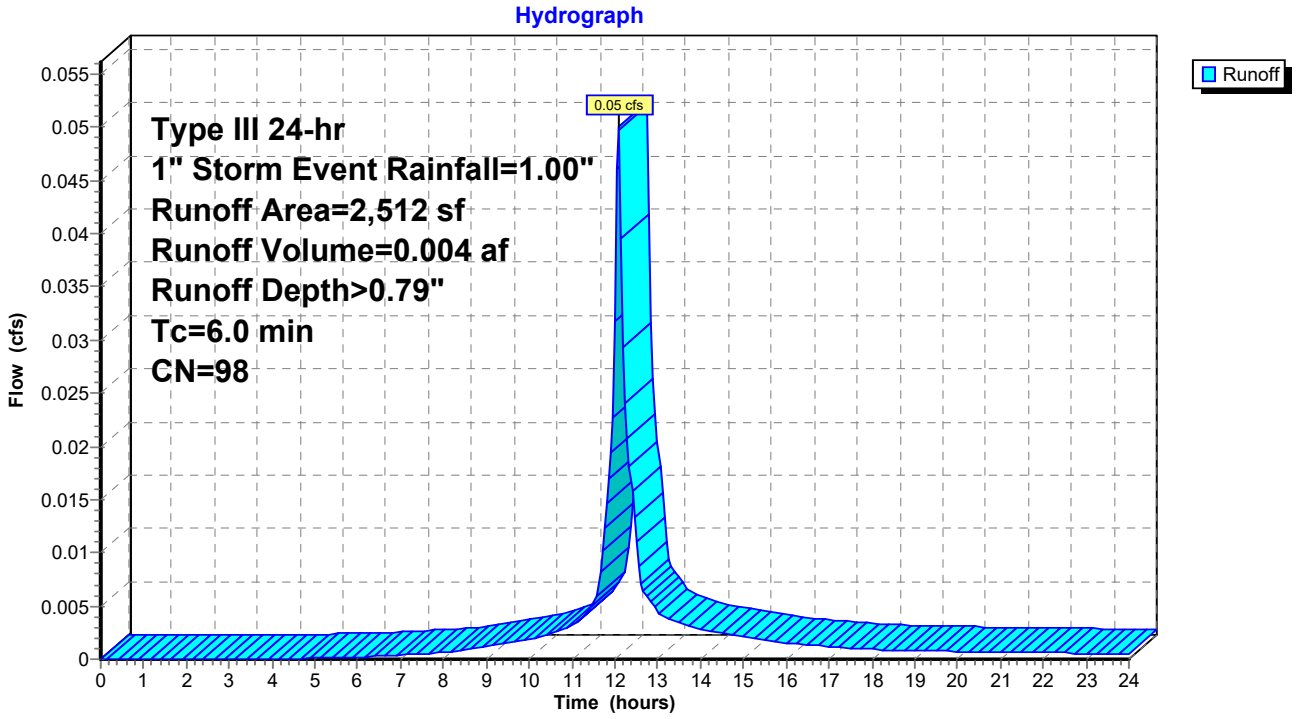

Summary for Subcatchment 16S: Shared Street - Trench Drain

Runoff = 0.18 cfs @ 12.09 hrs, Volume= 0.014 af, Depth> 0.79"

Runoff by SCS TR-20 method, UH=SCS, Weighted-CN, Time Span= 0.00-24.00 hrs, dt= 0.05 hrs
Type III 24-hr 1" Storm Event Rainfall=1.00"

	Area (sf)	CN	Description
	0	39	>75% Grass cover, Good, HSG A
*	8,931	98	Impervious Shared Street
	8,931	98	Weighted Average
	8,931		100.00% Impervious Area

Tc (min)	Length (feet)	Slope (ft/ft)	Velocity (ft/sec)	Capacity (cfs)	Description
6.0					**Direct Entry,**

Subcatchment 16S: Shared Street - Trench Drain

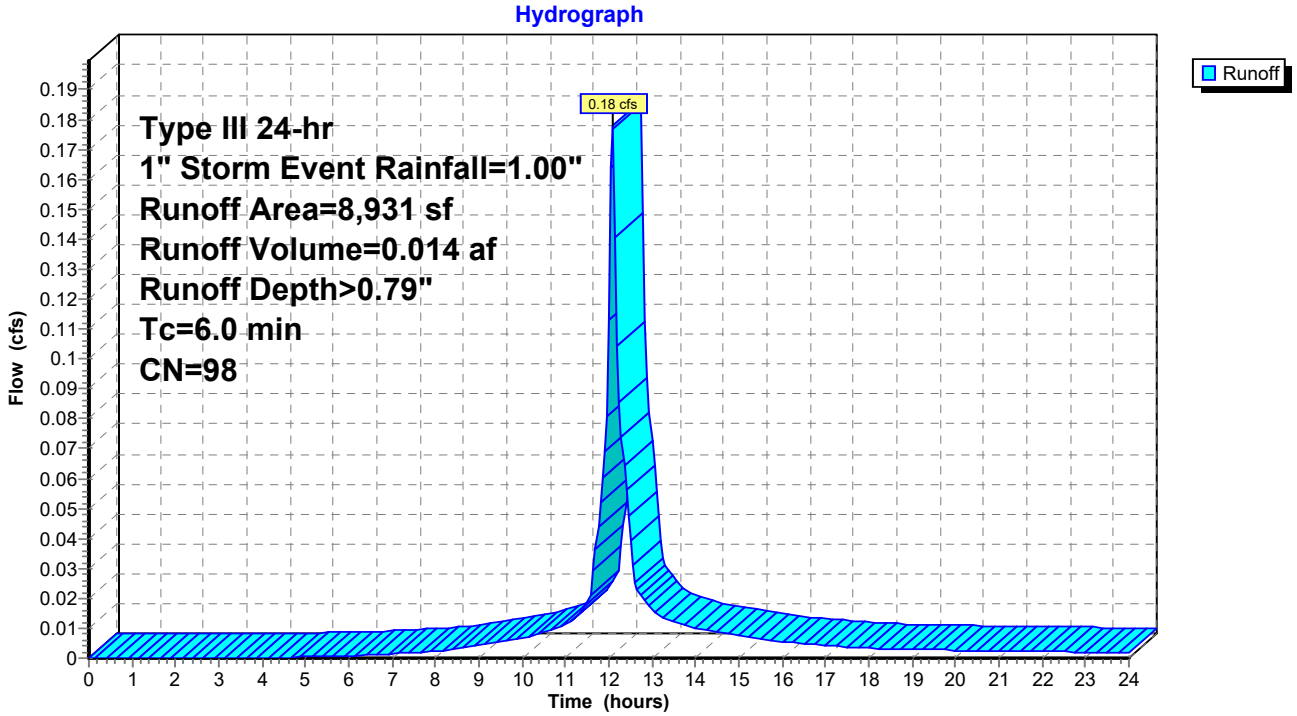

Summary for Subcatchment 17S: Future Block 3 Building Footprint

Runoff = 0.20 cfs @ 12.09 hrs, Volume= 0.015 af, Depth> 0.79"

Runoff by SCS TR-20 method, UH=SCS, Weighted-CN, Time Span= 0.00-24.00 hrs, dt= 0.05 hrs
Type III 24-hr 1" Storm Event Rainfall=1.00"

	Area (sf)	CN	Description
*	9,998	98	Gravel
	9,998		100.00% Impervious Area

Tc (min)	Length (feet)	Slope (ft/ft)	Velocity (ft/sec)	Capacity (cfs)	Description
6.0					**Direct Entry,**

Subcatchment 17S: Future Block 3 Building Footprint

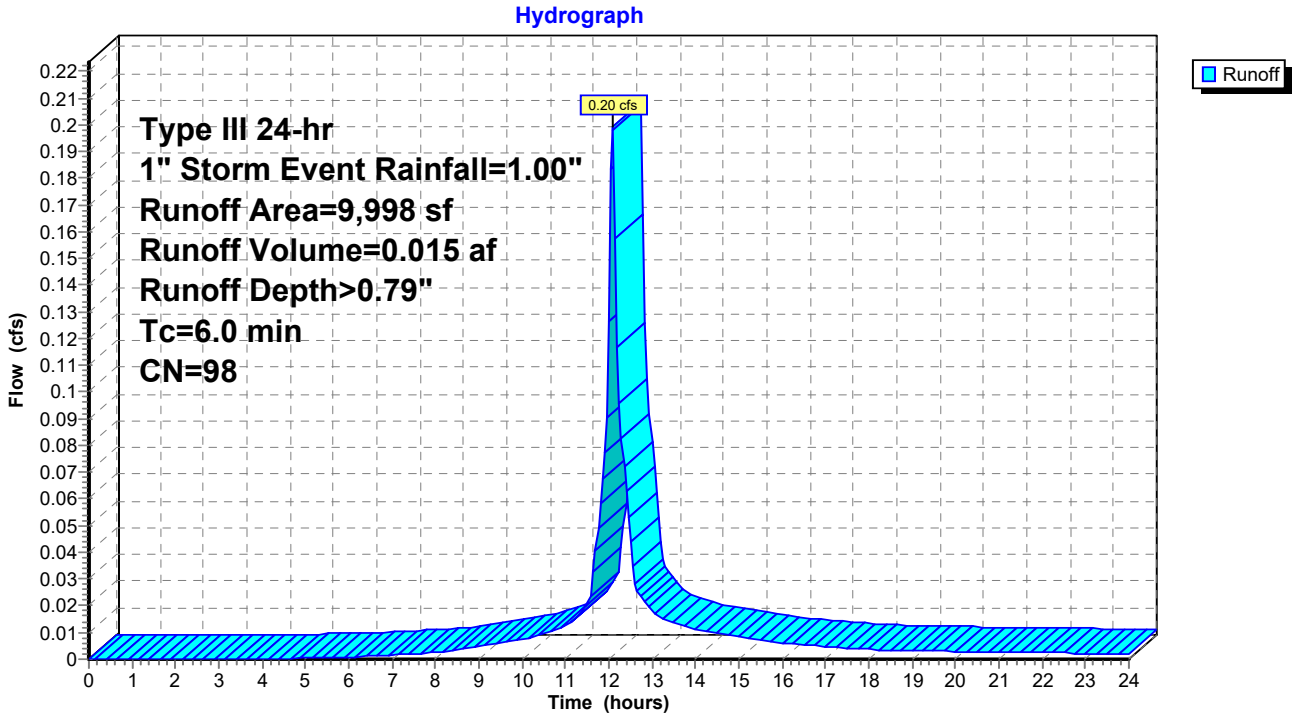

Summary for Subcatchment 18S: Plaza between Blocks 2 & 4

Runoff = 0.41 cfs @ 12.09 hrs, Volume= 0.031 af, Depth> 0.79"

Runoff by SCS TR-20 method, UH=SCS, Weighted-CN, Time Span= 0.00-24.00 hrs, dt= 0.05 hrs
Type III 24-hr 1" Storm Event Rainfall=1.00"

	Area (sf)	CN	Description
*	20,352	98	Impervious
	106	39	>75% Grass cover, Good, HSG A
	20,458	98	Weighted Average
	106		0.52% Pervious Area
	20,352		99.48% Impervious Area

Tc (min)	Length (feet)	Slope (ft/ft)	Velocity (ft/sec)	Capacity (cfs)	Description
6.0					**Direct Entry,**

Subcatchment 18S: Plaza between Blocks 2 & 4

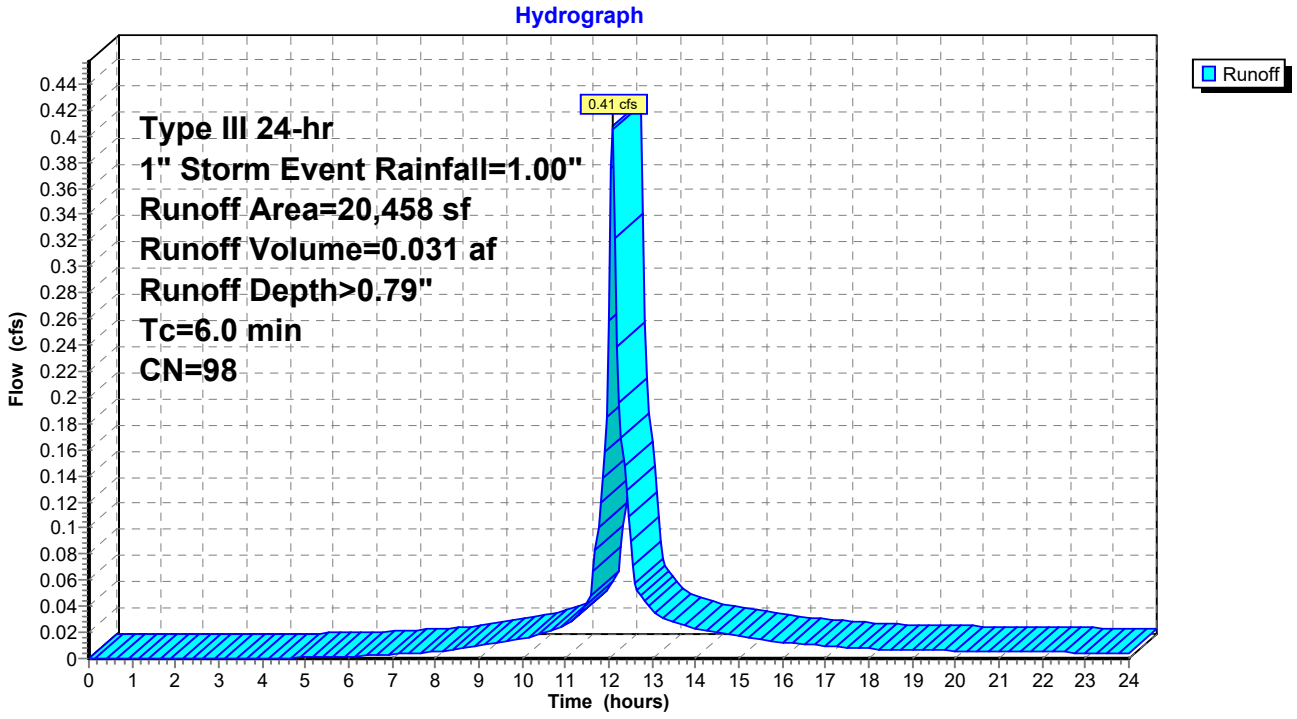

Summary for Subcatchment 19S: Building 4A

Runoff = 1.38 cfs @ 12.09 hrs, Volume= 0.105 af, Depth> 0.79"

Runoff by SCS TR-20 method, UH=SCS, Weighted-CN, Time Span= 0.00-24.00 hrs, dt= 0.05 hrs
Type III 24-hr 1" Storm Event Rainfall=1.00"

	Area (sf)	CN	Description
*	69,274	98	Roof
	69,274		100.00% Impervious Area

Tc (min)	Length (feet)	Slope (ft/ft)	Velocity (ft/sec)	Capacity (cfs)	Description
6.0					**Direct Entry,**

Subcatchment 19S: Building 4A

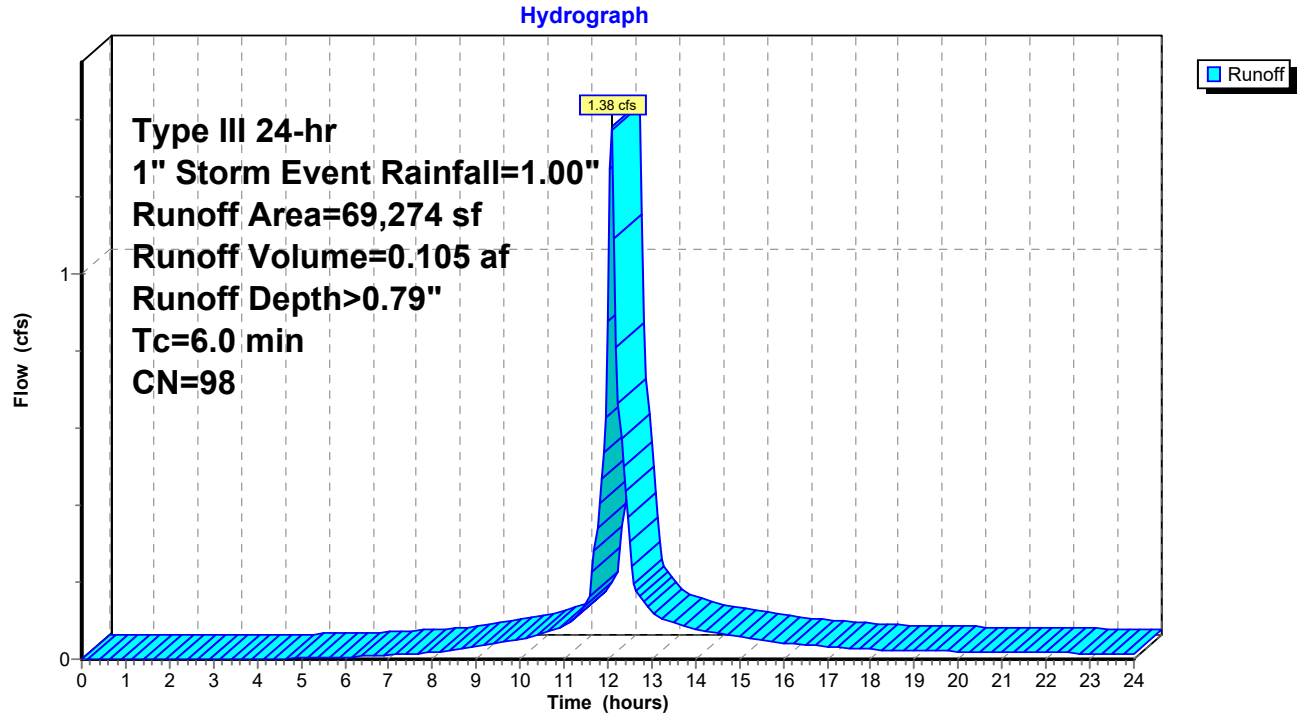

Summary for Subcatchment 20S: Redevelopment area east and south of Building 4A

Runoff = 0.00 cfs @ 21.36 hrs, Volume= 0.000 af, Depth> 0.00"

Runoff by SCS TR-20 method, UH=SCS, Weighted-CN, Time Span= 0.00-24.00 hrs, dt= 0.05 hrs
Type III 24-hr 1" Storm Event Rainfall=1.00"

	Area (sf)	CN	Description
*	2,489	98	Impervious
	2,270	39	>75% Grass cover, Good, HSG A
	4,759	70	Weighted Average
	2,270		47.70% Pervious Area
	2,489		52.30% Impervious Area

Tc (min)	Length (feet)	Slope (ft/ft)	Velocity (ft/sec)	Capacity (cfs)	Description
6.0					**Direct Entry,**

Subcatchment 20S: Redevelopment area east and south of Building 4A

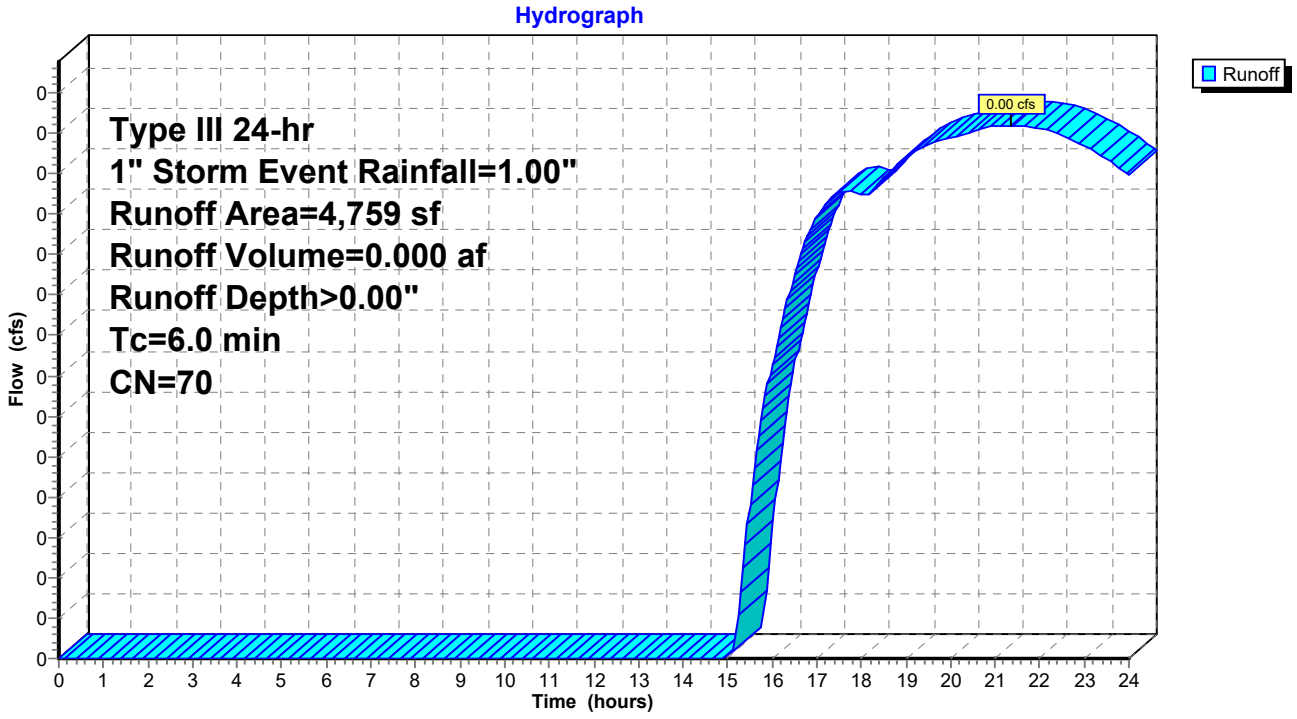

Summary for Subcatchment 21S: Eastern Waterfront

Runoff = 0.13 cfs @ 12.16 hrs, Volume= 0.019 af, Depth> 0.11"

Runoff by SCS TR-20 method, UH=SCS, Weighted-CN, Time Span= 0.00-24.00 hrs, dt= 0.05 hrs
Type III 24-hr 1" Storm Event Rainfall=1.00"

	Area (sf)	CN	Description
*	63,527	98	Impervious
	23,372	39	>75% Grass cover, Good, HSG A
	86,899	82	Weighted Average
	23,372		26.90% Pervious Area
	63,527		73.10% Impervious Area

Tc (min)	Length (feet)	Slope (ft/ft)	Velocity (ft/sec)	Capacity (cfs)	Description
6.0					**Direct Entry,**

Subcatchment 21S: Eastern Waterfront

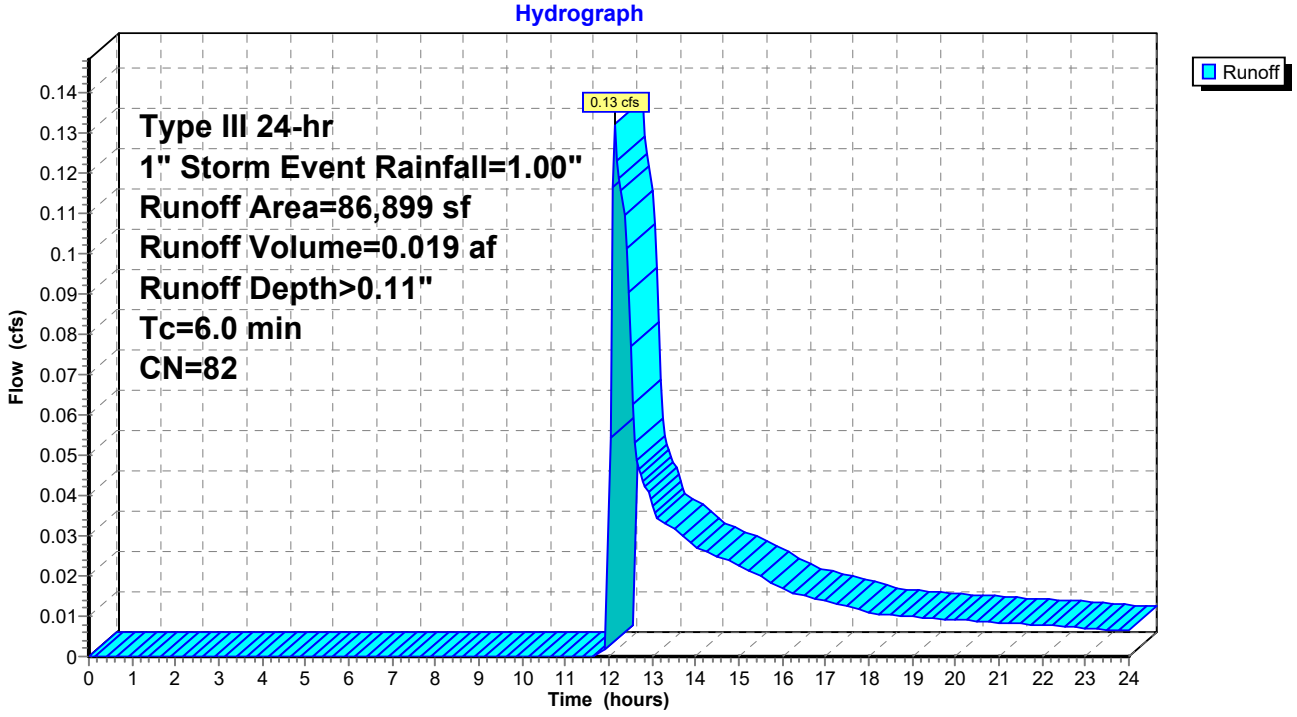

Summary for Pond 1P: DMH 1

Inflow Area = 1.783 ac, 93.06% Impervious, Inflow Depth > 0.56" for 1" Storm Event event
Inflow = 1.10 cfs @ 12.09 hrs, Volume= 0.083 af
Outflow = 1.10 cfs @ 12.09 hrs, Volume= 0.083 af, Atten= 0%, Lag= 0.0 min
Primary = 1.10 cfs @ 12.09 hrs, Volume= 0.083 af

Routing by Stor-Ind method, Time Span= 0.00-24.00 hrs, dt= 0.05 hrs
Peak Elev= 10.33' @ 12.09 hrs
Flood Elev= 14.71'

Device	Routing	Invert	Outlet Devices
#1	Primary	9.77'	**21.0" Round Culvert** L= 61.0' CPP, projecting, no headwall, Ke= 0.900 Inlet / Outlet Invert= 9.77' / 9.54' S= 0.0038 '/' Cc= 0.900 n= 0.013 Corrugated PE, smooth interior, Flow Area= 2.41 sf

Primary OutFlow Max=1.07 cfs @ 12.09 hrs HW=10.32' (Free Discharge)
1=Culvert (Barrel Controls 1.07 cfs @ 2.47 fps)

Pond 1P: DMH 1

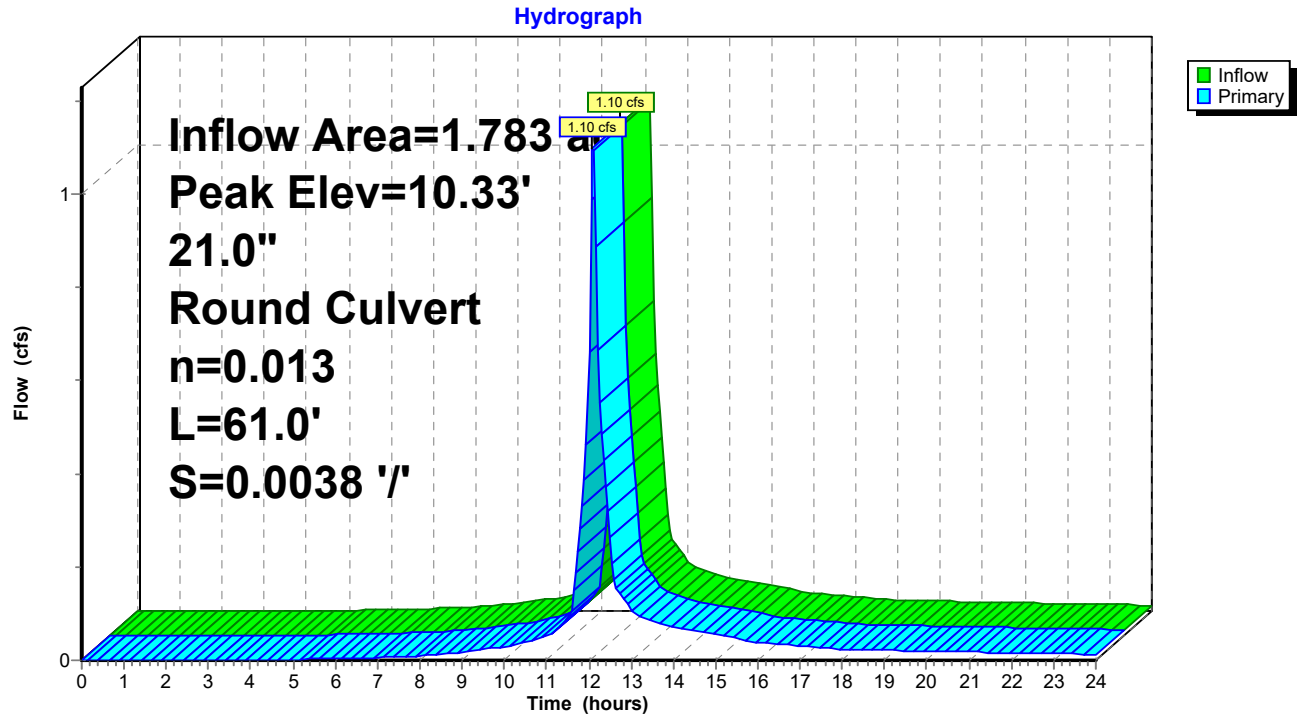

Summary for Pond 2P: DMH 2

Inflow Area = 1.931 ac, 92.54% Impervious, Inflow Depth > 0.55" for 1" Storm Event event
Inflow = 1.16 cfs @ 12.09 hrs, Volume= 0.089 af
Outflow = 1.16 cfs @ 12.09 hrs, Volume= 0.089 af, Atten= 0%, Lag= 0.0 min
Primary = 1.16 cfs @ 12.09 hrs, Volume= 0.089 af

Routing by Stor-Ind method, Time Span= 0.00-24.00 hrs, dt= 0.05 hrs
Peak Elev= 10.05' @ 12.09 hrs
Flood Elev= 14.63'

Device	Routing	Invert	Outlet Devices
#1	Primary	9.50'	**21.0" Round Culvert** L= 31.0' CPP, square edge headwall, Ke= 0.500 Inlet / Outlet Invert= 9.50' / 9.35' S= 0.0048 '/' Cc= 0.900 n= 0.013 Corrugated PE, smooth interior, Flow Area= 2.41 sf

Primary OutFlow Max=1.14 cfs @ 12.09 hrs HW=10.04' (Free Discharge)
1=Culvert (Barrel Controls 1.14 cfs @ 2.70 fps)

Pond 2P: DMH 2

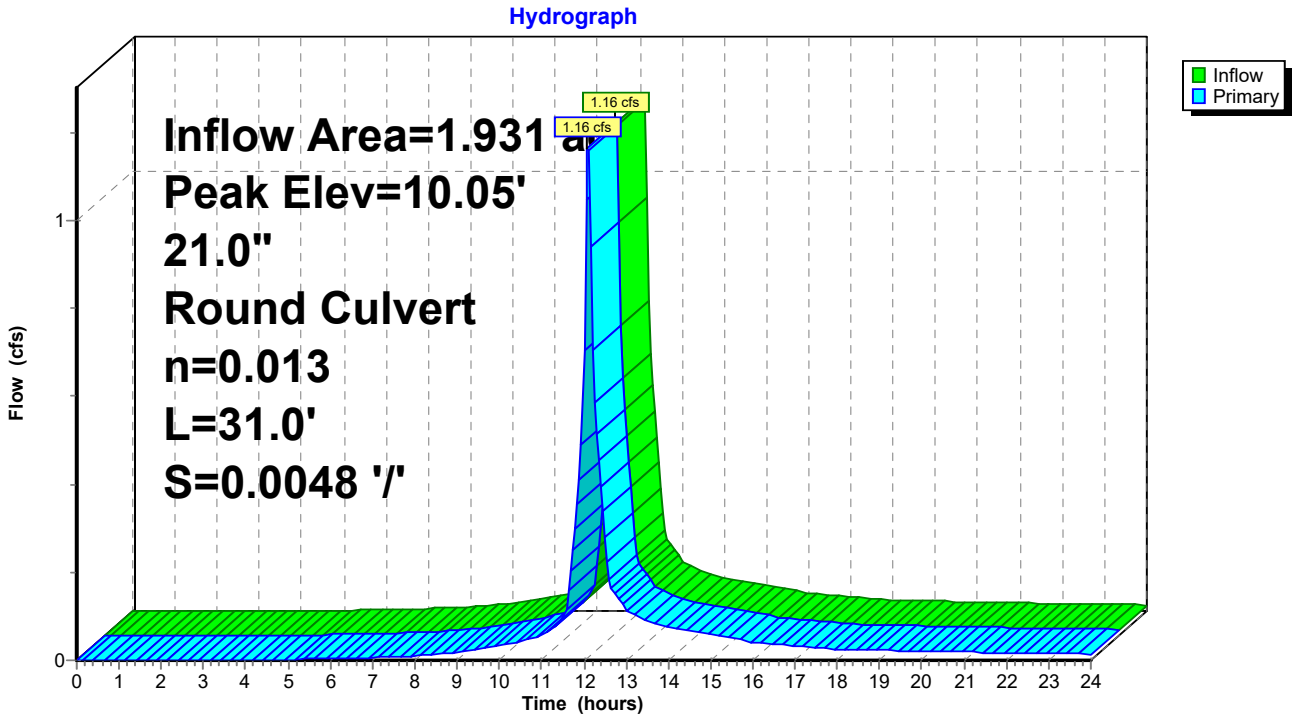

Summary for Pond 3P: Storm Structure

Inflow Area = 1.931 ac, 92.54% Impervious, Inflow Depth > 0.55" for 1" Storm Event event
Inflow = 1.16 cfs @ 12.09 hrs, Volume= 0.089 af
Outflow = 1.16 cfs @ 12.09 hrs, Volume= 0.089 af, Atten= 0%, Lag= 0.0 min
Primary = 1.16 cfs @ 12.09 hrs, Volume= 0.089 af

Routing by Stor-Ind method, Time Span= 0.00-24.00 hrs, dt= 0.05 hrs
Peak Elev= 9.75' @ 12.09 hrs
Flood Elev= 14.51'

Device	Routing	Invert	Outlet Devices
#1	Primary	9.35'	**15.0" Round Culvert X 3.00** L= 4.0' CPP, projecting, no headwall, Ke= 0.900 Inlet / Outlet Invert= 9.35' / 9.35' S= 0.0000 '/' Cc= 0.900 n= 0.013 Corrugated PE, smooth interior, Flow Area= 1.23 sf

Primary OutFlow Max=1.14 cfs @ 12.09 hrs HW=9.74' (Free Discharge)
1=Culvert (Barrel Controls 1.14 cfs @ 1.73 fps)

Pond 3P: Storm Structure

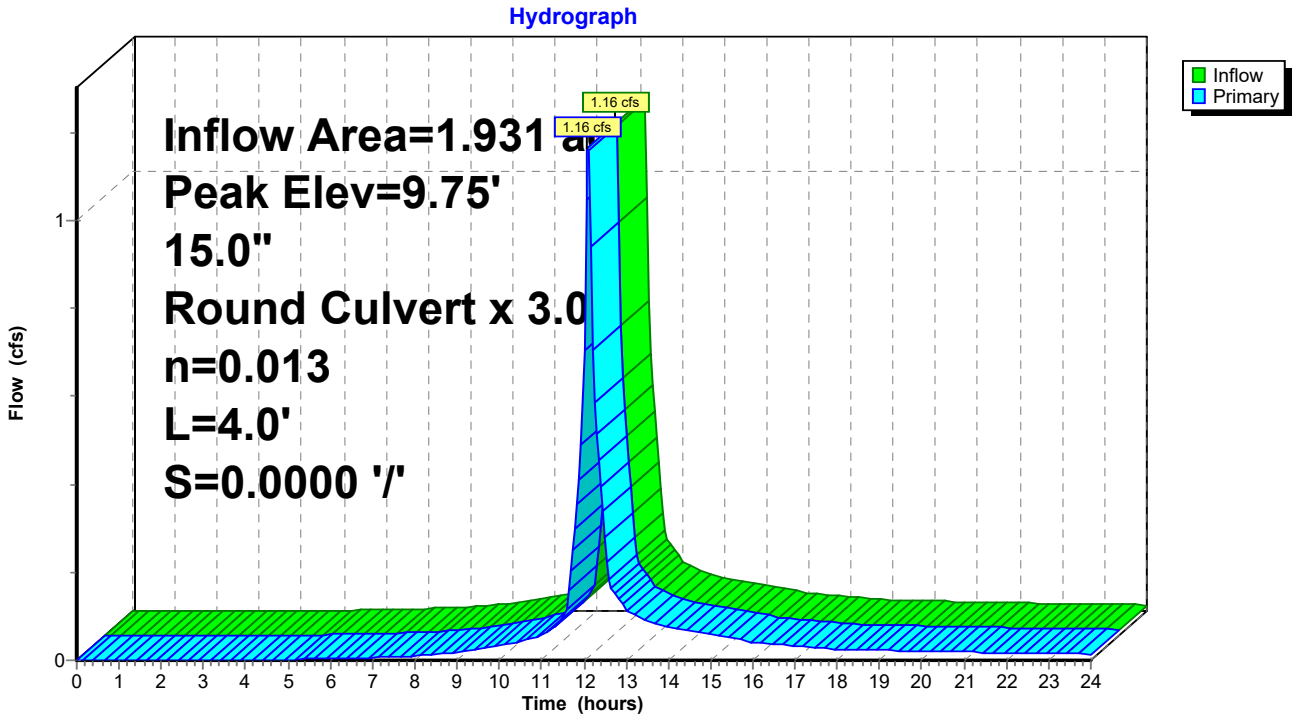

Summary for Pond 4P: R-Tank 1

Inflow Area = 1.931 ac, 92.54% Impervious, Inflow Depth > 0.55" for 1" Storm Event event
Inflow = 1.16 cfs @ 12.09 hrs, Volume= 0.089 af
Outflow = 0.80 cfs @ 12.19 hrs, Volume= 0.083 af, Atten= 31%, Lag= 5.6 min
Primary = 0.80 cfs @ 12.19 hrs, Volume= 0.083 af

Routing by Stor-Ind method, Time Span= 0.00-24.00 hrs, dt= 0.05 hrs
Peak Elev= 8.12' @ 12.19 hrs Surf.Area= 1,597 sf Storage= 857 cf
Flood Elev= 10.42' Surf.Area= 1,597 sf Storage= 3,504 cf

Plug-Flow detention time= 73.5 min calculated for 0.082 af (93% of inflow)
Center-of-Mass det. time= 38.0 min (847.4 - 809.4)

Volume	Invert	Avail.Storage	Storage Description
#1	7.35'	1,478 cf	**Stone Envelope (Prismatic)** Listed below (Recalc) 6,500 cf Overall - 2,806 cf Embedded = 3,694 cf x 40.0% Voids
#2	7.60'	2,666 cf	**R-Tank Double Modules (Prismatic)** Listed below (Recalc) Inside #1 2,806 cf Overall x 95.0% Voids
		4,143 cf	Total Available Storage

Elevation (feet)	Surf.Area (sq-ft)	Inc.Store (cubic-feet)	Cum.Store (cubic-feet)
7.35	1,597	0	0
11.42	1,597	6,500	6,500

Elevation (feet)	Surf.Area (sq-ft)	Inc.Store (cubic-feet)	Cum.Store (cubic-feet)
7.60	1,293	0	0
9.77	1,293	2,806	2,806

Device	Routing	Invert	Outlet Devices
#1	Primary	7.60'	**21.0" Round Culvert to Filter** L= 4.0' CMP, projecting, no headwall, Ke= 0.900 Inlet / Outlet Invert= 7.60' / 7.60' S= 0.0000 '/' Cc= 0.900 n= 0.013 Corrugated PE, smooth interior, Flow Area= 2.41 sf

Primary OutFlow Max=0.79 cfs @ 12.19 hrs HW=8.11' (Free Discharge)
↑**1=Culvert to Filter** (Barrel Controls 0.79 cfs @ 2.02 fps)

Pond 4P: R-Tank 1

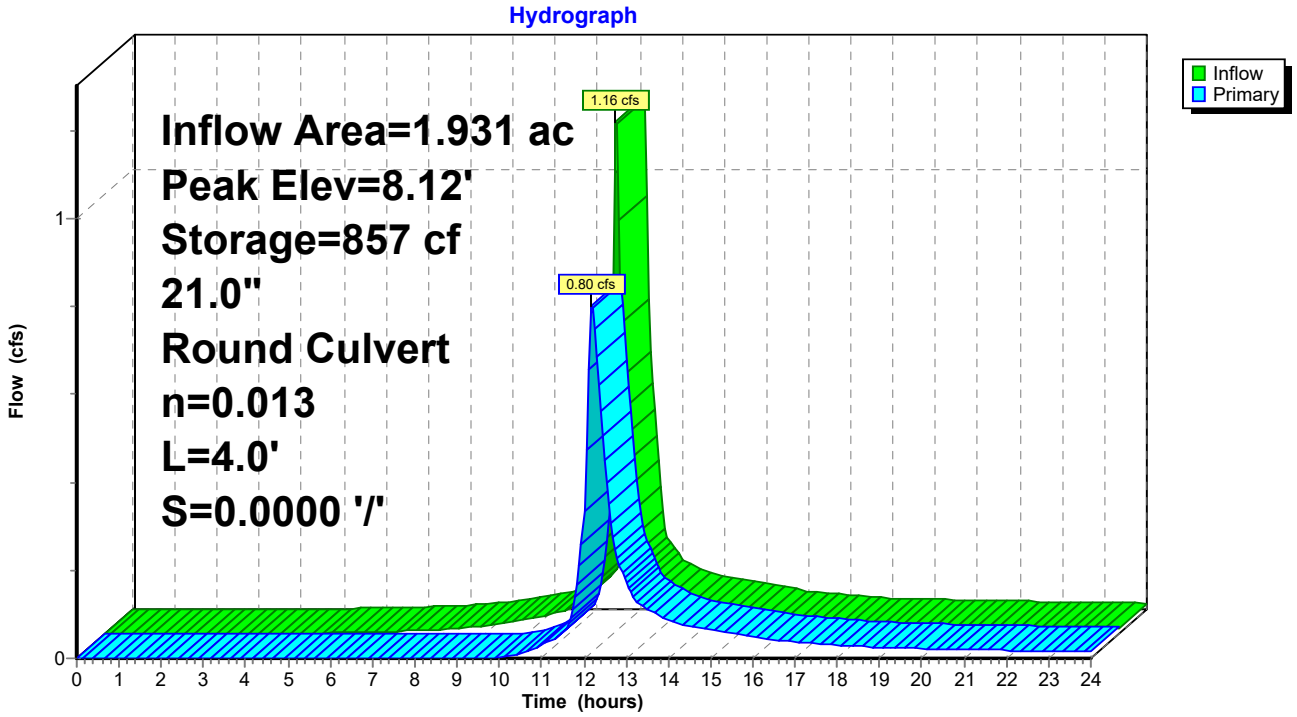

Summary for Pond 6P: CB27

Inflow Area = 2.619 ac, 99.91% Impervious, Inflow Depth > 0.79" for 1" Storm Event event
Inflow = 2.28 cfs @ 12.09 hrs, Volume= 0.173 af
Outflow = 2.28 cfs @ 12.09 hrs, Volume= 0.173 af, Atten= 0%, Lag= 0.0 min
Primary = 2.28 cfs @ 12.09 hrs, Volume= 0.173 af

Routing by Stor-Ind method, Time Span= 0.00-24.00 hrs, dt= 0.05 hrs
Peak Elev= 10.30' @ 12.09 hrs
Flood Elev= 14.57'

Device	Routing	Invert	Outlet Devices
#1	Primary	9.53'	**24.0" Round Culvert** L= 22.0' CPP, projecting, no headwall, Ke= 0.900 Inlet / Outlet Invert= 9.53' / 9.39' S= 0.0064 '/' Cc= 0.900 n= 0.013 Corrugated PE, smooth interior, Flow Area= 3.14 sf

Primary OutFlow Max=2.22 cfs @ 12.09 hrs HW=10.29' (Free Discharge)
1=Culvert (Barrel Controls 2.22 cfs @ 2.99 fps)

Pond 6P: CB27

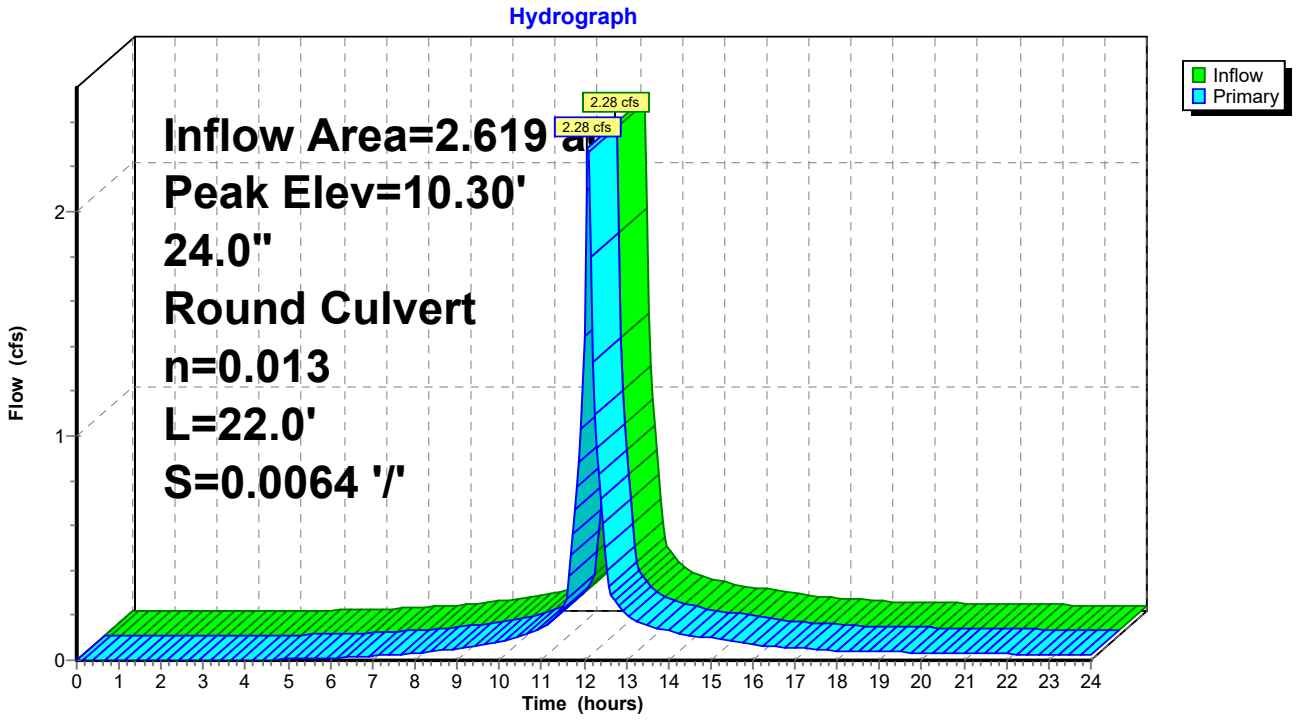

Summary for Pond 7P: Storm Structure

Inflow Area = 2.619 ac, 99.91% Impervious, Inflow Depth > 0.79" for 1" Storm Event event
Inflow = 2.28 cfs @ 12.09 hrs, Volume= 0.173 af
Outflow = 2.28 cfs @ 12.09 hrs, Volume= 0.173 af, Atten= 0%, Lag= 0.0 min
Primary = 2.28 cfs @ 12.09 hrs, Volume= 0.173 af

Routing by Stor-Ind method, Time Span= 0.00-24.00 hrs, dt= 0.05 hrs
Peak Elev= 9.95' @ 12.09 hrs
Flood Elev= 14.25'

Device	Routing	Invert	Outlet Devices
#1	Primary	9.39'	**15.0" Round Culvert X 3.00** L= 4.0' CPP, projecting, no headwall, Ke= 0.900 Inlet / Outlet Invert= 9.39' / 9.39' S= 0.0000 '/' Cc= 0.900 n= 0.013 Corrugated PE, smooth interior, Flow Area= 1.23 sf

Primary OutFlow Max=2.22 cfs @ 12.09 hrs HW=9.94' (Free Discharge)
1=Culvert (Barrel Controls 2.22 cfs @ 2.09 fps)

Pond 7P: Storm Structure

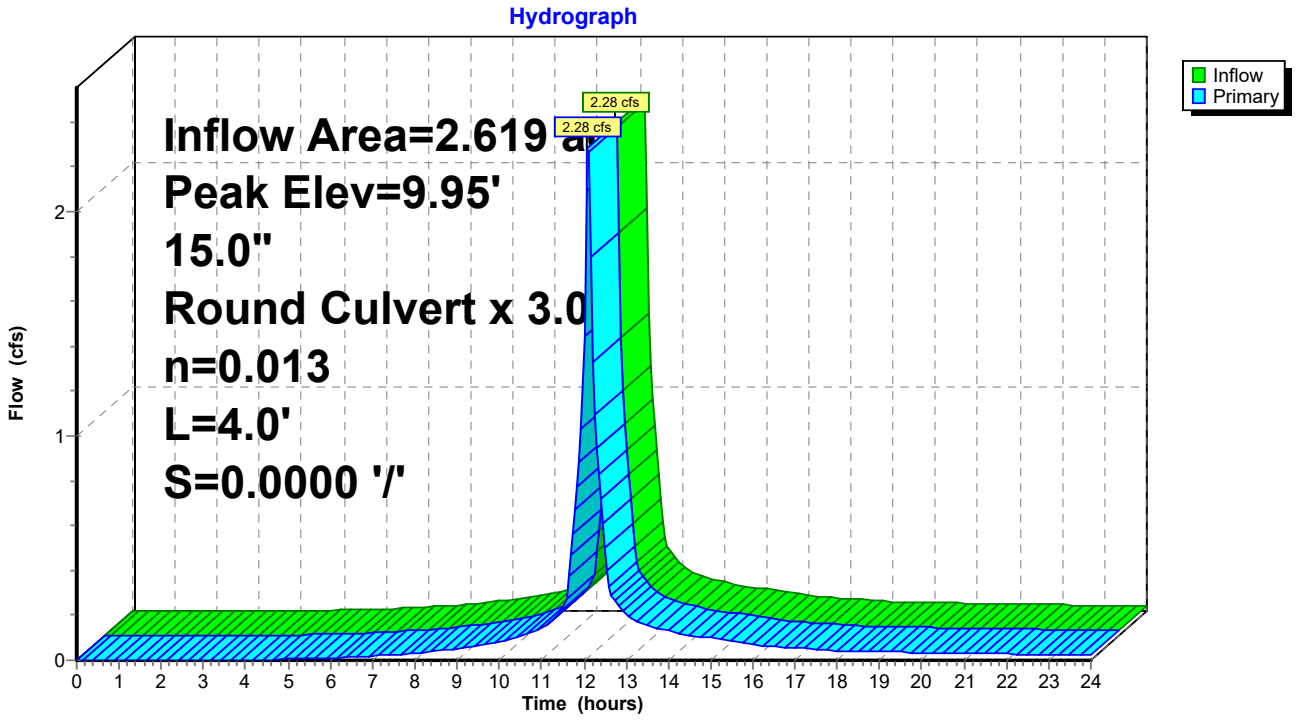

Summary for Pond 8P: R-Tank 2

Inflow Area = 2.619 ac, 99.91% Impervious, Inflow Depth > 0.79" for 1" Storm Event event
Inflow = 2.28 cfs @ 12.09 hrs, Volume= 0.173 af
Outflow = 1.36 cfs @ 12.21 hrs, Volume= 0.159 af, Atten= 40%, Lag= 7.1 min
Primary = 1.36 cfs @ 12.21 hrs, Volume= 0.159 af

Routing by Stor-Ind method, Time Span= 0.00-24.00 hrs, dt= 0.05 hrs
Peak Elev= 8.47' @ 12.21 hrs Surf.Area= 3,128 sf Storage= 2,089 cf
Flood Elev= 12.71' Surf.Area= 3,128 sf Storage= 8,290 cf

Plug-Flow detention time= 89.3 min calculated for 0.159 af (92% of inflow)
Center-of-Mass det. time= 50.4 min (837.8 - 787.4)

Volume	Invert	Avail.Storage	Storage Description
#1	7.57'	2,767 cf	**Stone Envelope (Prismatic)** Listed below (Recalc) 12,731 cf Overall - 5,813 cf Embedded = 6,918 cf x 40.0% Voids
#2	7.82'	5,523 cf	**R-Tank Double Modules (Prismatic)** Listed below (Recalc) Inside #1 5,813 cf Overall x 95.0% Voids
		8,290 cf	Total Available Storage

Elevation (feet)	Surf.Area (sq-ft)	Inc.Store (cubic-feet)	Cum.Store (cubic-feet)
7.57	3,128	0	0
11.64	3,128	12,731	12,731

Elevation (feet)	Surf.Area (sq-ft)	Inc.Store (cubic-feet)	Cum.Store (cubic-feet)
7.82	2,679	0	0
9.99	2,679	5,813	5,813

Device	Routing	Invert	Outlet Devices
#1	Primary	7.82'	**24.0" Round Culvert to Filter** L= 4.0' CMP, projecting, no headwall, Ke= 0.900 Inlet / Outlet Invert= 7.82' / 7.82' S= 0.0000 '/' Cc= 0.900 n= 0.013 Corrugated PE, smooth interior, Flow Area= 3.14 sf

Primary OutFlow Max=1.36 cfs @ 12.21 hrs HW=8.47' (Free Discharge)
1=Culvert to Filter (Barrel Controls 1.36 cfs @ 2.29 fps)

Pond 8P: R-Tank 2

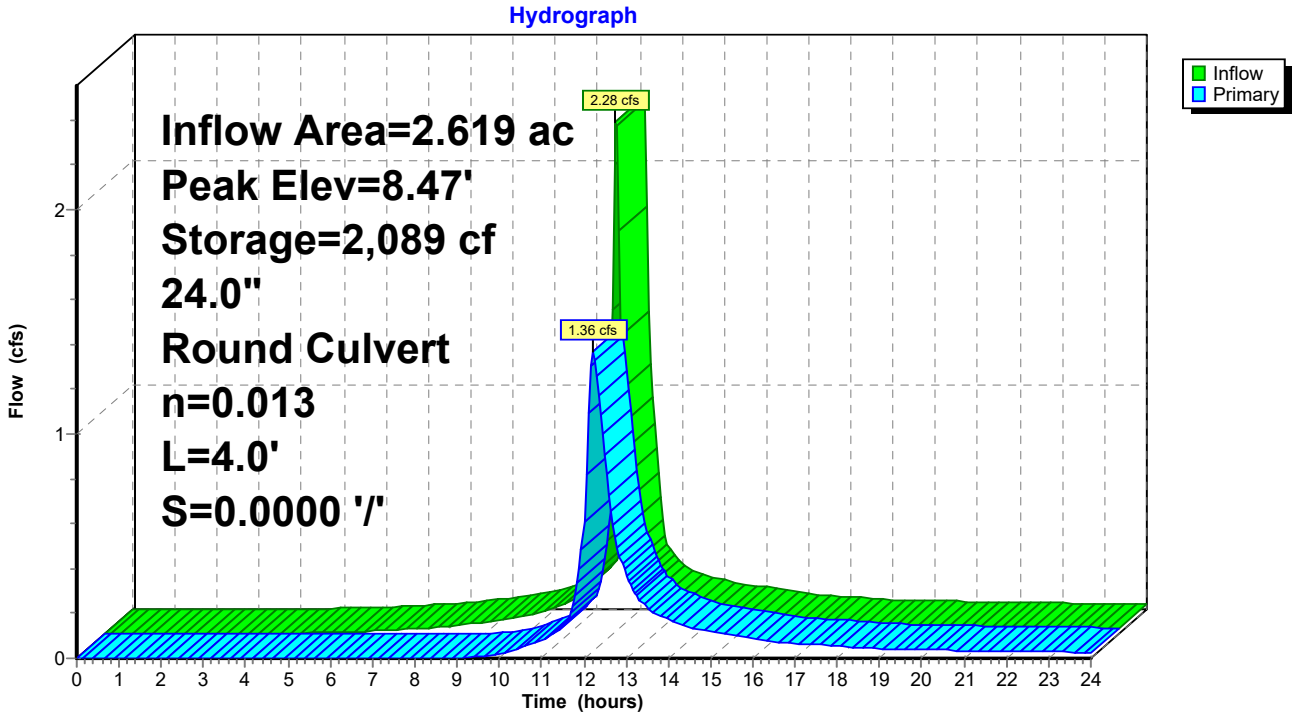

Summary for Pond 10P: DMH 5

Inflow Area = 4.550 ac, 96.78% Impervious, Inflow Depth > 0.64" for 1" Storm Event event
Inflow = 2.16 cfs @ 12.20 hrs, Volume= 0.242 af
Outflow = 2.16 cfs @ 12.20 hrs, Volume= 0.242 af, Atten= 0%, Lag= 0.0 min
Primary = 2.16 cfs @ 12.20 hrs, Volume= 0.242 af

Routing by Stor-Ind method, Time Span= 0.00-24.00 hrs, dt= 0.05 hrs
Peak Elev= 7.67' @ 12.20 hrs
Flood Elev= 13.56'

Device	Routing	Invert	Outlet Devices
#1	Primary	7.03'	**30.0" Round Culvert** L= 83.1' CPP, projecting, no headwall, Ke= 0.900 Inlet / Outlet Invert= 7.03' / 6.20' S= 0.0100 '/' Cc= 0.900 n= 0.013 Corrugated PE, smooth interior, Flow Area= 4.91 sf

Primary OutFlow Max=2.16 cfs @ 12.20 hrs HW=7.67' (Free Discharge)
1=Culvert (Inlet Controls 2.16 cfs @ 2.16 fps)

Pond 10P: DMH 5

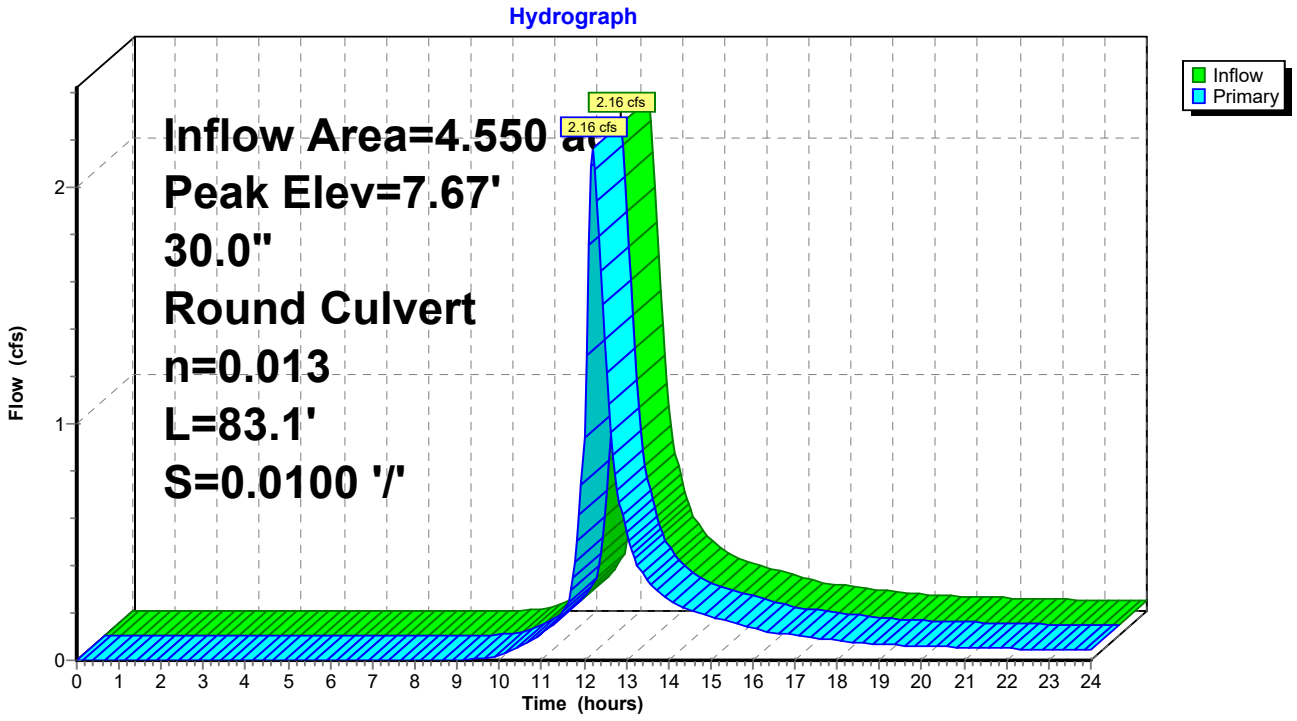

Summary for Pond 11P: Jellyfish 1 JFPD0806-4-2

Inflow Area = 1.931 ac, 92.54% Impervious, Inflow Depth > 0.51" for 1" Storm Event event
Inflow = 0.80 cfs @ 12.19 hrs, Volume= 0.083 af
Outflow = 0.80 cfs @ 12.19 hrs, Volume= 0.083 af, Atten= 0%, Lag= 0.0 min
Primary = 0.80 cfs @ 12.19 hrs, Volume= 0.083 af

Routing by Stor-Ind method, Time Span= 0.00-24.00 hrs, dt= 0.05 hrs
Peak Elev= 8.99' @ 12.19 hrs
Flood Elev= 14.79'

Device	Routing	Invert	Outlet Devices
#1	Primary	7.60'	**21.0" Round Filter Culvert Out** L= 90.0' CPP, projecting, no headwall, Ke= 0.900 Inlet / Outlet Invert= 7.60' / 7.13' S= 0.0052 '/' Cc= 0.900 n= 0.013 Corrugated PE, smooth interior, Flow Area= 2.41 sf
#2	Device 1	7.60'	**JF Filter-1 CSV File** Head (feet) 0.00 0.08 0.17 0.25 0.33 0.42 0.50 0.58 0.67 0.75 0.83 0.92 1.00 1.08 1.17 1.25 1.33 1.42 1.50 Disch. (cfs) 0.000 0.010 0.020 0.030 0.040 0.050 0.059 0.129 0.198 0.267 0.337 0.406 0.475 0.545 0.614 0.683 0.753 0.822 0.891
#3	Device 1	9.59'	**2.8' long x 0.5' breadth Broad-Crested Rectangular Weir** Head (feet) 0.20 0.40 0.60 0.80 1.00 Coef. (English) 2.80 2.92 3.08 3.30 3.32

Primary OutFlow Max=0.79 cfs @ 12.19 hrs HW=8.98' (Free Discharge)
└**1=Filter Culvert Out** (Passes 0.79 cfs of 6.14 cfs potential flow)
  ├**2=JF Filter-1 CSV File** (Custom Controls 0.79 cfs)
  └**3=Broad-Crested Rectangular Weir**(Controls 0.00 cfs)

Pond 11P: Jellyfish 1 JFPD0806-4-2

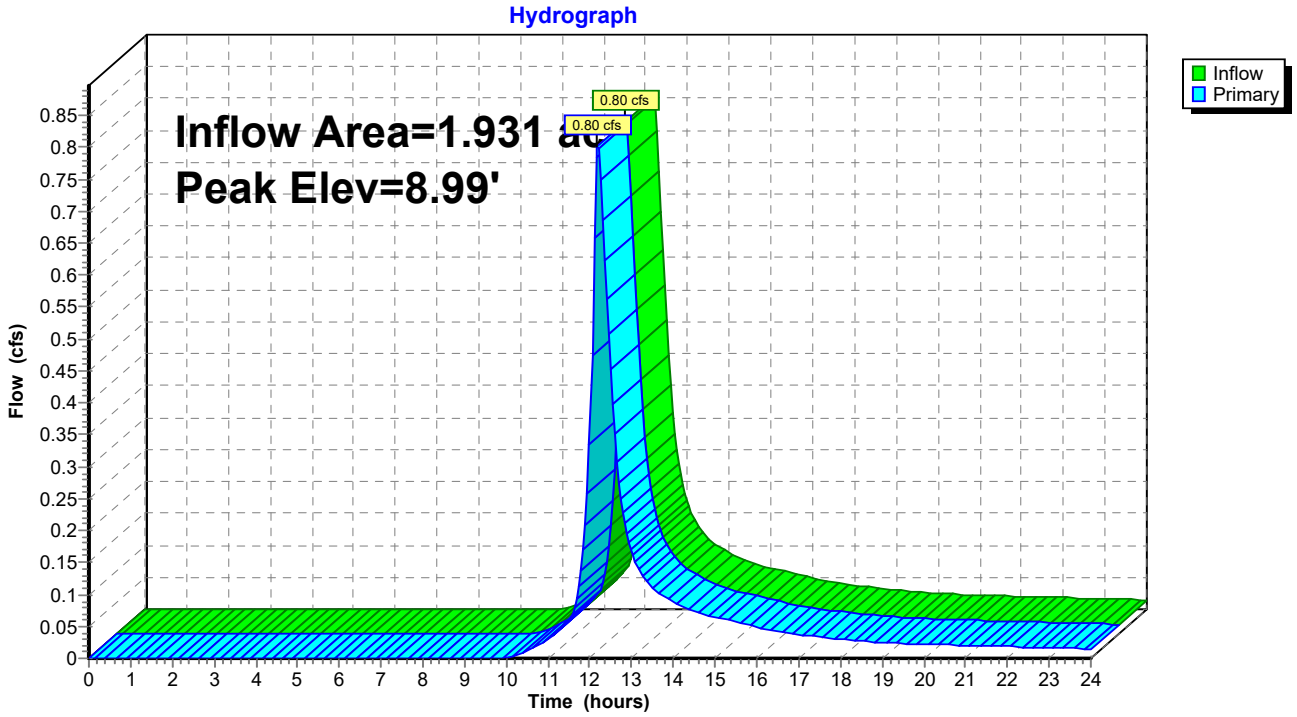

Summary for Pond 12P: Jellyfish 2 JFPD0806-7-2

Inflow Area = 2.619 ac, 99.91% Impervious, Inflow Depth > 0.73" for 1" Storm Event event
Inflow = 1.36 cfs @ 12.21 hrs, Volume= 0.159 af
Outflow = 1.36 cfs @ 12.21 hrs, Volume= 0.159 af, Atten= 0%, Lag= 0.0 min
Primary = 1.36 cfs @ 12.21 hrs, Volume= 0.159 af

Routing by Stor-Ind method, Time Span= 0.00-24.00 hrs, dt= 0.05 hrs
Peak Elev= 9.28' @ 12.21 hrs
Flood Elev= 12.70'

Device	Routing	Invert	Outlet Devices
#1	Primary	7.82'	**24.0" Round Filter Culvert Out** L= 114.0' CPP, projecting, no headwall, Ke= 0.900 Inlet / Outlet Invert= 7.82' / 7.13' S= 0.0061 '/' Cc= 0.900 n= 0.013 Corrugated PE, smooth interior, Flow Area= 3.14 sf
#2	Device 1	7.82'	**JF Filter-2 CSV File** Head (feet) 0.00 0.08 0.17 0.25 0.33 0.42 0.50 0.58 0.67 0.75 0.83 0.92 1.00 1.08 1.17 1.25 1.33 1.42 1.50 Disch. (cfs) 0.000 0.010 0.020 0.030 0.040 0.050 0.059 0.173 0.287 0.401 0.515 0.629 0.743 0.857 0.970 1.084 1.198 1.312 1.426
#3	Device 1	9.95'	**2.8' long x 0.5' breadth Broad-Crested Rectangular Weir** Head (feet) 0.20 0.40 0.60 0.80 1.00 Coef. (English) 2.80 2.92 3.08 3.30 3.32

Primary OutFlow Max=1.36 cfs @ 12.21 hrs HW=9.27' (Free Discharge)
└**1=Filter Culvert Out** (Passes 1.36 cfs of 7.92 cfs potential flow)
  ├**2=JF Filter-2 CSV File** (Custom Controls 1.36 cfs)
  └**3=Broad-Crested Rectangular Weir** (Controls 0.00 cfs)

Pond 12P: Jellyfish 2 JFPD0806-7-2

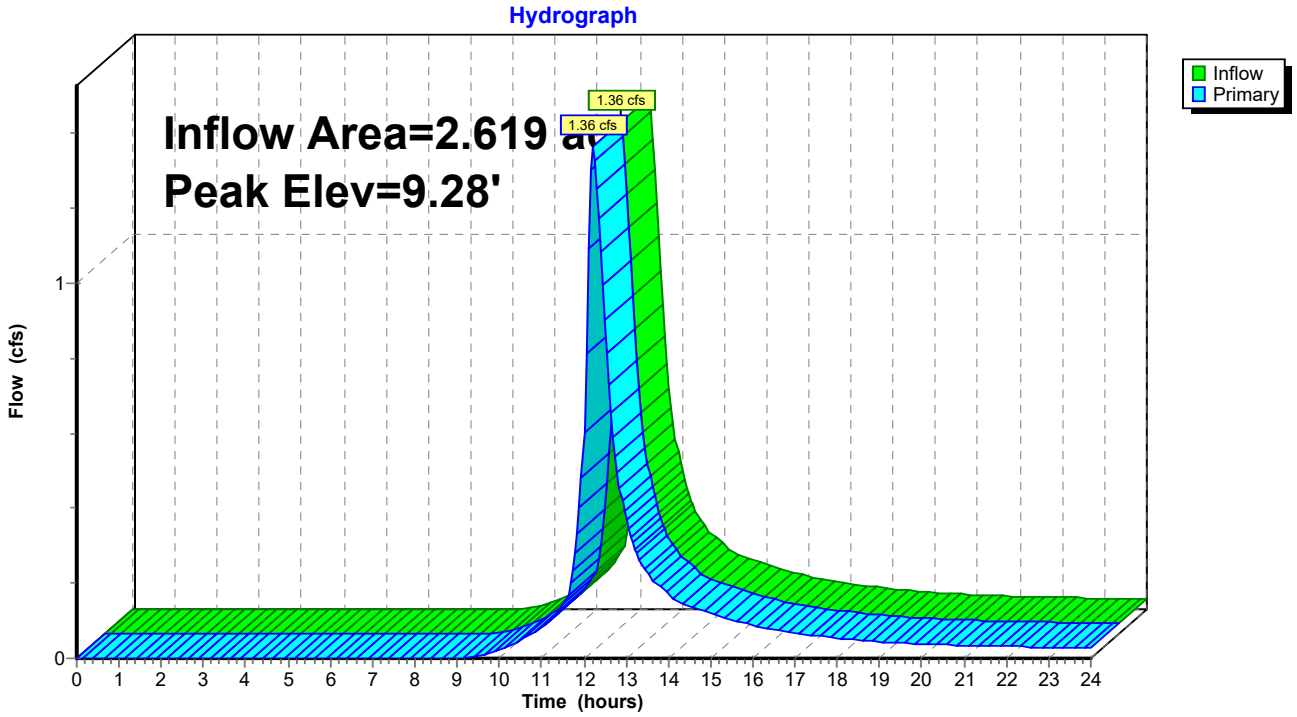

Summary for Link 1L: Fore Connector

Inflow Area = 1.013 ac, 56.83% Impervious, Inflow Depth > 0.31" for 1" Storm Event event
Inflow = 0.34 cfs @ 12.09 hrs, Volume= 0.026 af
Primary = 0.34 cfs @ 12.09 hrs, Volume= 0.026 af, Atten= 0%, Lag= 0.0 min

Primary outflow = Inflow, Time Span= 0.00-24.00 hrs, dt= 0.05 hrs

Link 1L: Fore Connector

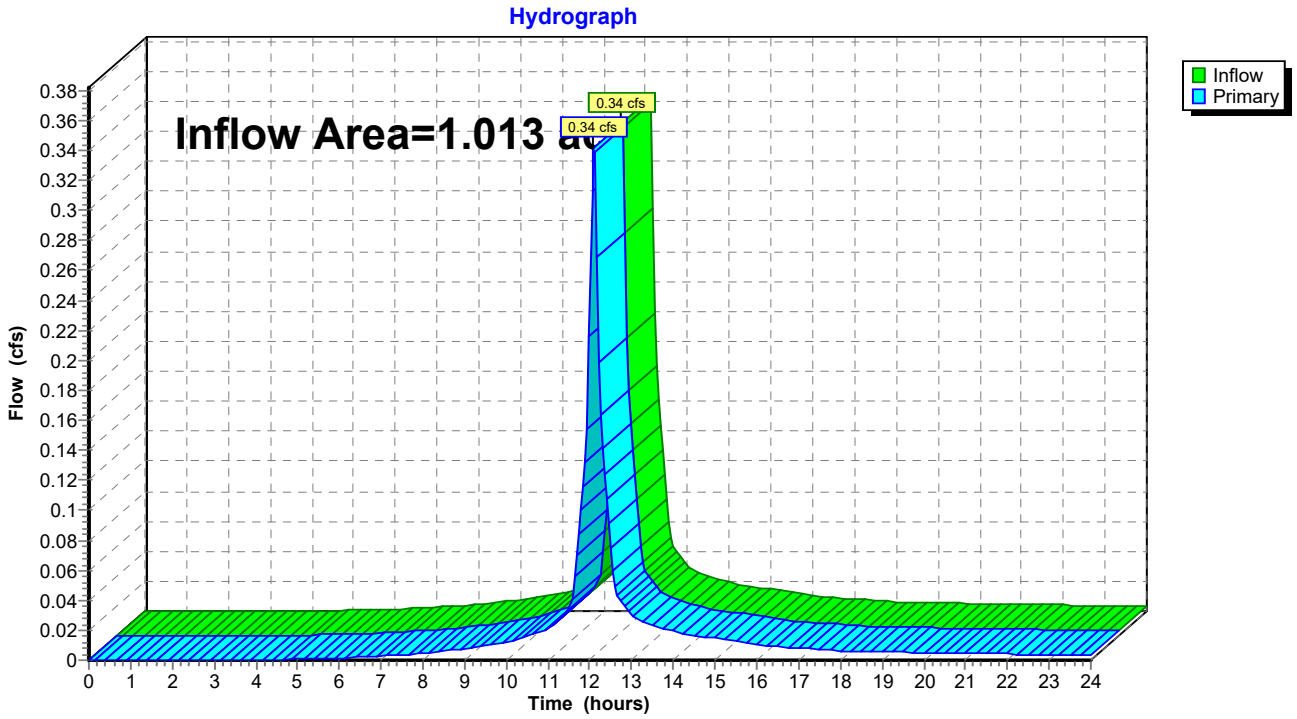

Summary for Link 2L: Fore River

Inflow Area = 6.884 ac, 89.32% Impervious, Inflow Depth > 0.48" for 1" Storm Event event
Inflow = 2.41 cfs @ 12.18 hrs, Volume= 0.276 af
Primary = 2.41 cfs @ 12.18 hrs, Volume= 0.276 af, Atten= 0%, Lag= 0.0 min

Primary outflow = Inflow, Time Span= 0.00-24.00 hrs, dt= 0.05 hrs

Link 2L: Fore River

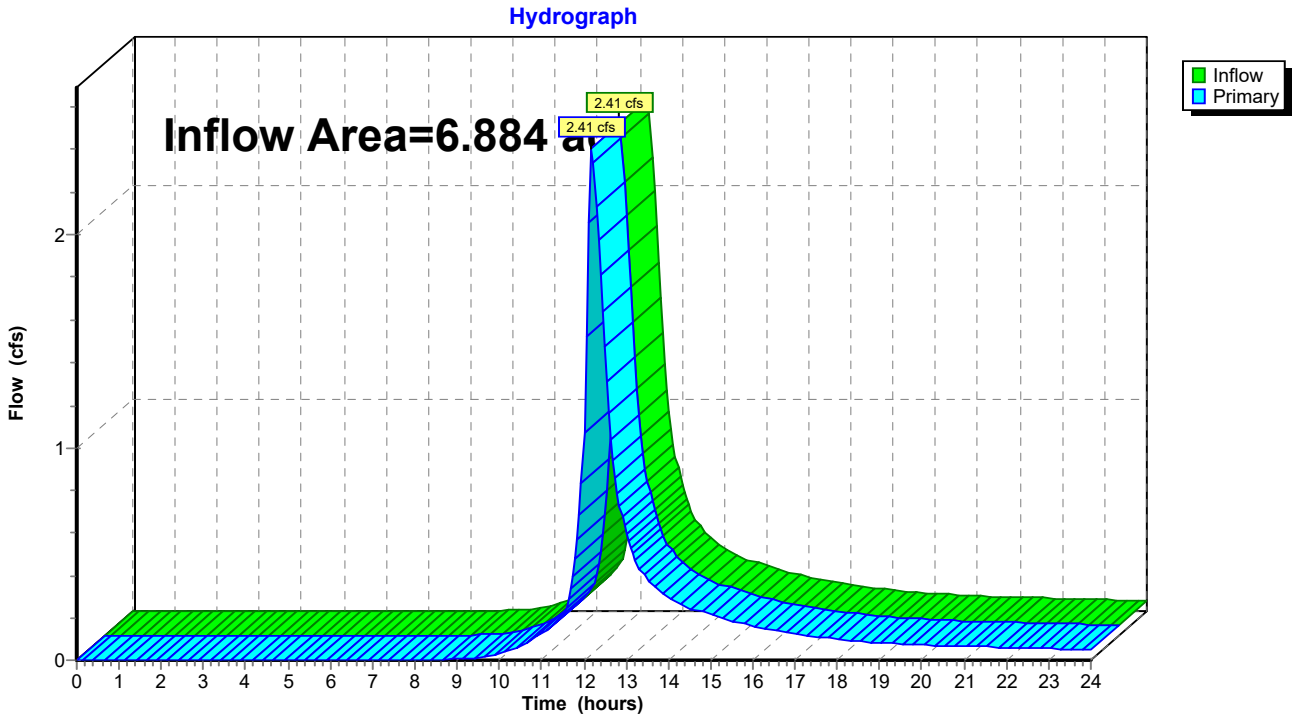

Time span=0.00-24.00 hrs, dt=0.05 hrs, 481 points
Runoff by SCS TR-20 method, UH=SCS, Weighted-CN
Reach routing by Stor-Ind+Trans method - Pond routing by Stor-Ind method

Subcatchment1S: Block 1B Runoff Area=27,045 sf 29.55% Impervious Runoff Depth>1.48"
Tc=6.0 min CN=56 Runoff=0.95 cfs 0.076 af

Subcatchment2S: Western half of Runoff Area=17,090 sf 100.00% Impervious Runoff Depth>5.56"
Tc=6.0 min CN=98 Runoff=2.18 cfs 0.182 af

Subcatchment3S: Eastern half of Runoff Area=17,090 sf 100.00% Impervious Runoff Depth>5.56"
Tc=6.0 min CN=98 Runoff=2.18 cfs 0.182 af

Subcatchment4S: Shared Street - Trench Runoff Area=24,890 sf 82.54% Impervious Runoff Depth>4.43"
Tc=6.0 min CN=88 Runoff=2.81 cfs 0.211 af

Subcatchment5S: Building 12 Runoff Area=3,244 sf 100.00% Impervious Runoff Depth>5.56"
Tc=6.0 min CN=98 Runoff=0.41 cfs 0.034 af

Subcatchment6Sa: Plaza between Blocks Runoff Area=20,337 sf 94.84% Impervious Runoff Depth>5.21"
Tc=6.0 min CN=95 Runoff=2.54 cfs 0.203 af

Subcatchment6Sb: Plaza between Blocks 1 Runoff Area=3,122 sf 71.75% Impervious Runoff Depth>3.70"
Tc=6.0 min CN=81 Runoff=0.30 cfs 0.022 af

Subcatchment7S: Building 14 Runoff Area=2,572 sf 100.00% Impervious Runoff Depth>5.56"
Tc=6.0 min CN=98 Runoff=0.33 cfs 0.027 af

Subcatchment8S: Building 15 Runoff Area=4,507 sf 100.00% Impervious Runoff Depth>5.56"
Tc=6.0 min CN=98 Runoff=0.57 cfs 0.048 af

Subcatchment9S: Building 2 North Runoff Area=4,695 sf 100.00% Impervious Runoff Depth>5.56"
Tc=6.0 min CN=98 Runoff=0.60 cfs 0.050 af

Subcatchment10S: Building 3 North Runoff Area=2,212 sf 100.00% Impervious Runoff Depth>5.56"
Tc=6.0 min CN=98 Runoff=0.28 cfs 0.024 af

Subcatchment11S: Building 2 South Runoff Area=4,855 sf 100.00% Impervious Runoff Depth>5.56"
Tc=6.0 min CN=98 Runoff=0.62 cfs 0.052 af

Subcatchment12S: Building 3 South Runoff Area=2,326 sf 100.00% Impervious Runoff Depth>5.56"
Tc=6.0 min CN=98 Runoff=0.30 cfs 0.025 af

Subcatchment13S: Building 6 Runoff Area=3,304 sf 100.00% Impervious Runoff Depth>5.56"
Tc=6.0 min CN=98 Runoff=0.42 cfs 0.035 af

Subcatchment14S: Building 6B North Runoff Area=3,873 sf 100.00% Impervious Runoff Depth>5.56"
Tc=6.0 min CN=98 Runoff=0.49 cfs 0.041 af

Subcatchment15S: Building 6B South Runoff Area=2,512 sf 100.00% Impervious Runoff Depth>5.56"
Tc=6.0 min CN=98 Runoff=0.32 cfs 0.027 af

Subcatchment16S: Shared Street - Trench Runoff Area=8,931 sf 100.00% Impervious Runoff Depth>5.56"
Tc=6.0 min CN=98 Runoff=1.14 cfs 0.095 af

Subcatchment17S: Future Block 3 Runoff Area=9,998 sf 100.00% Impervious Runoff Depth>5.56"
Tc=6.0 min CN=98 Runoff=1.27 cfs 0.106 af

Subcatchment18S: Plaza between Blocks Runoff Area=20,458 sf 99.48% Impervious Runoff Depth>5.56"
Tc=6.0 min CN=98 Runoff=2.61 cfs 0.218 af

Subcatchment19S: Building 4A Runoff Area=69,274 sf 100.00% Impervious Runoff Depth>5.56"
Tc=6.0 min CN=98 Runoff=8.82 cfs 0.737 af

Subcatchment20S: Redevelopment area Runoff Area=4,759 sf 52.30% Impervious Runoff Depth>2.64"
Tc=6.0 min CN=70 Runoff=0.33 cfs 0.024 af

Subcatchment21S: Eastern Waterfront Runoff Area=86,899 sf 73.10% Impervious Runoff Depth>3.80"
Tc=6.0 min CN=82 Runoff=8.64 cfs 0.632 af

Pond 1P: DMH 1 Peak Elev=11.80' Inflow=9.48 cfs 0.759 af
21.0" Round Culvert n=0.013 L=61.0' S=0.0038 '/' Outflow=9.48 cfs 0.759 af

Pond 2P: DMH 2 Peak Elev=11.46' Inflow=10.20 cfs 0.816 af
21.0" Round Culvert n=0.013 L=31.0' S=0.0048 '/' Outflow=10.20 cfs 0.816 af

Pond 3P: Storm Structure Peak Elev=10.66' Inflow=10.20 cfs 0.816 af
15.0" Round Culvert x 3.00 n=0.013 L=4.0' S=0.0000 '/' Outflow=10.20 cfs 0.816 af

Pond 4P: R-Tank 1 Peak Elev=9.59' Storage=2,853 cf Inflow=10.20 cfs 0.816 af
21.0" Round Culvert n=0.013 L=4.0' S=0.0000 '/' Outflow=8.90 cfs 0.807 af

Pond 6P: CB27 Peak Elev=12.00' Inflow=14.53 cfs 1.213 af
24.0" Round Culvert n=0.013 L=22.0' S=0.0064 '/' Outflow=14.53 cfs 1.213 af

Pond 7P: Storm Structure Peak Elev=11.13' Inflow=14.53 cfs 1.213 af
15.0" Round Culvert x 3.00 n=0.013 L=4.0' S=0.0000 '/' Outflow=14.53 cfs 1.213 af

Pond 8P: R-Tank 2 Peak Elev=9.98' Storage=6,202 cf Inflow=14.53 cfs 1.213 af
24.0" Round Culvert n=0.013 L=4.0' S=0.0000 '/' Outflow=11.56 cfs 1.193 af

Pond 10P: DMH 5 Peak Elev=9.46' Inflow=20.41 cfs 2.000 af
30.0" Round Culvert n=0.013 L=83.1' S=0.0100 '/' Outflow=20.41 cfs 2.000 af

Pond 11P: Jellyfish 1 JFPD0806-4-2 Peak Elev=10.50' Inflow=8.90 cfs 0.807 af
Outflow=8.90 cfs 0.807 af

Pond 12P: Jellyfish 2 JFPD0806-7-2 Peak Elev=11.01' Inflow=11.56 cfs 1.193 af
Outflow=11.56 cfs 1.193 af

Link 1L: Fore Connector Inflow=3.11 cfs 0.258 af
Primary=3.11 cfs 0.258 af

Link 2L: Fore River

Inflow=29.77 cfs 2.762 af
Primary=29.77 cfs 2.762 af

Total Runoff Area = 7.897 ac Runoff Volume = 3.050 af Average Runoff Depth = 4.63"
14.85% Pervious = 1.173 ac 85.15% Impervious = 6.724 ac

Summary for Subcatchment 1S: Block 1B

Runoff = 0.95 cfs @ 12.10 hrs, Volume= 0.076 af, Depth> 1.48"

Runoff by SCS TR-20 method, UH=SCS, Weighted-CN, Time Span= 0.00-24.00 hrs, dt= 0.05 hrs
Type III 24-hr 25-Year Storm Rainfall=5.80"

	Area (sf)	CN	Description
*	7,991	98	Impervious
	19,054	39	>75% Grass cover, Good, HSG A
	27,045	56	Weighted Average
	19,054		70.45% Pervious Area
	7,991		29.55% Impervious Area

Tc (min)	Length (feet)	Slope (ft/ft)	Velocity (ft/sec)	Capacity (cfs)	Description
6.0					**Direct Entry,**

Subcatchment 1S: Block 1B

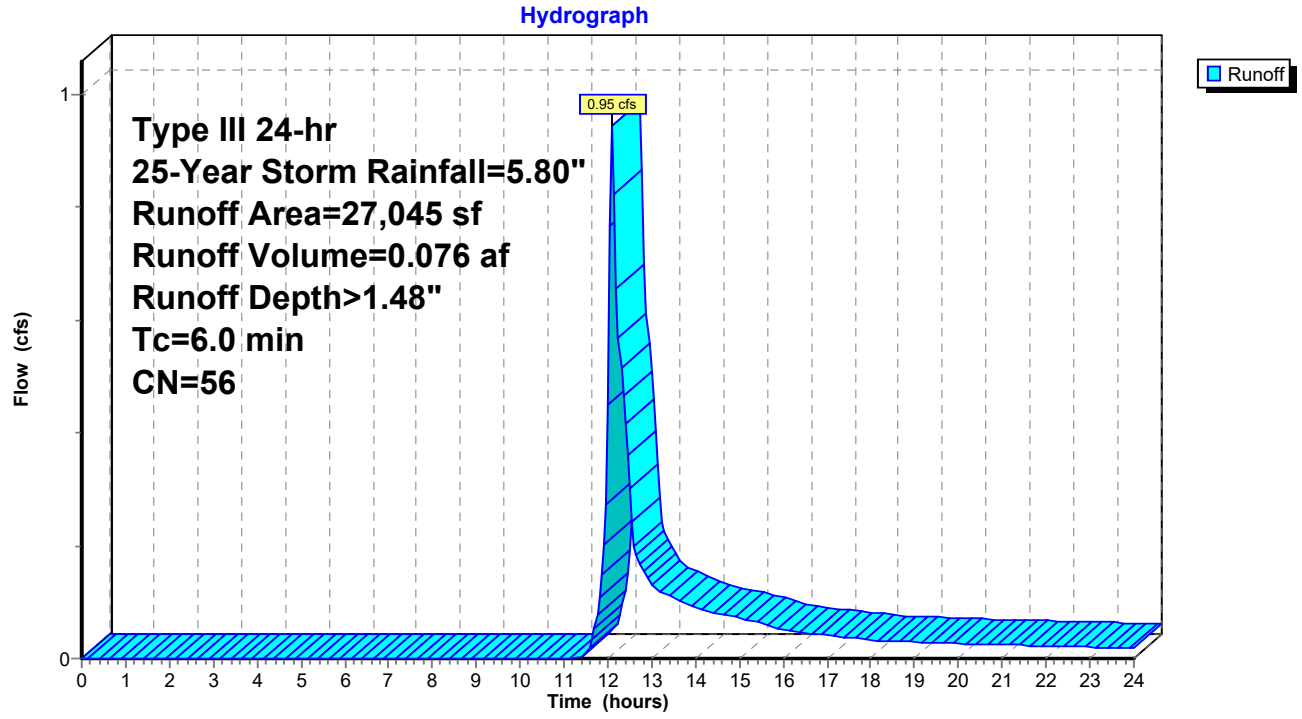

Summary for Subcatchment 2S: Western half of Building 1A

Runoff = 2.18 cfs @ 12.09 hrs, Volume= 0.182 af, Depth> 5.56"

Runoff by SCS TR-20 method, UH=SCS, Weighted-CN, Time Span= 0.00-24.00 hrs, dt= 0.05 hrs
Type III 24-hr 25-Year Storm Rainfall=5.80"

	Area (sf)	CN	Description
*	17,090	98	Roof
	17,090		100.00% Impervious Area

Tc (min)	Length (feet)	Slope (ft/ft)	Velocity (ft/sec)	Capacity (cfs)	Description
6.0					**Direct Entry,**

Subcatchment 2S: Western half of Building 1A

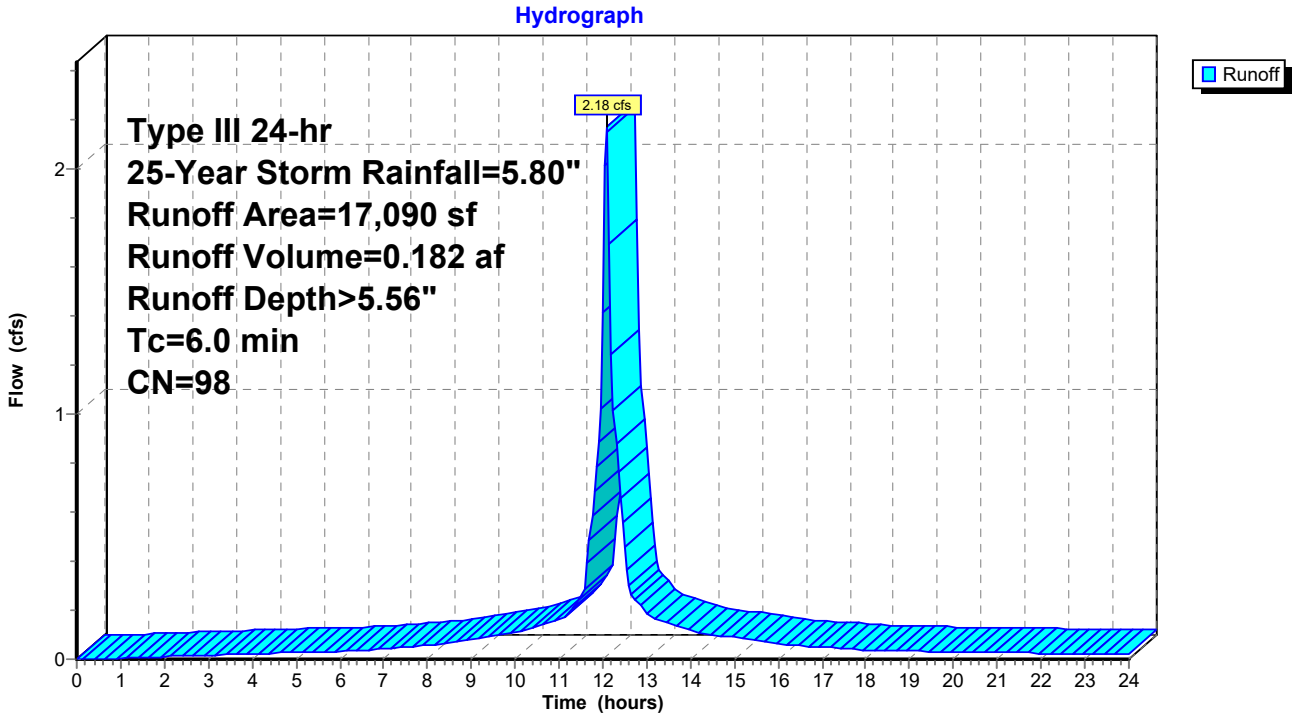

Summary for Subcatchment 3S: Eastern half of Building 1A

Runoff = 2.18 cfs @ 12.09 hrs, Volume= 0.182 af, Depth> 5.56"

Runoff by SCS TR-20 method, UH=SCS, Weighted-CN, Time Span= 0.00-24.00 hrs, dt= 0.05 hrs
Type III 24-hr 25-Year Storm Rainfall=5.80"

	Area (sf)	CN	Description
*	17,090	98	Roof
	17,090		100.00% Impervious Area

Tc (min)	Length (feet)	Slope (ft/ft)	Velocity (ft/sec)	Capacity (cfs)	Description
6.0					**Direct Entry,**

Subcatchment 3S: Eastern half of Building 1A

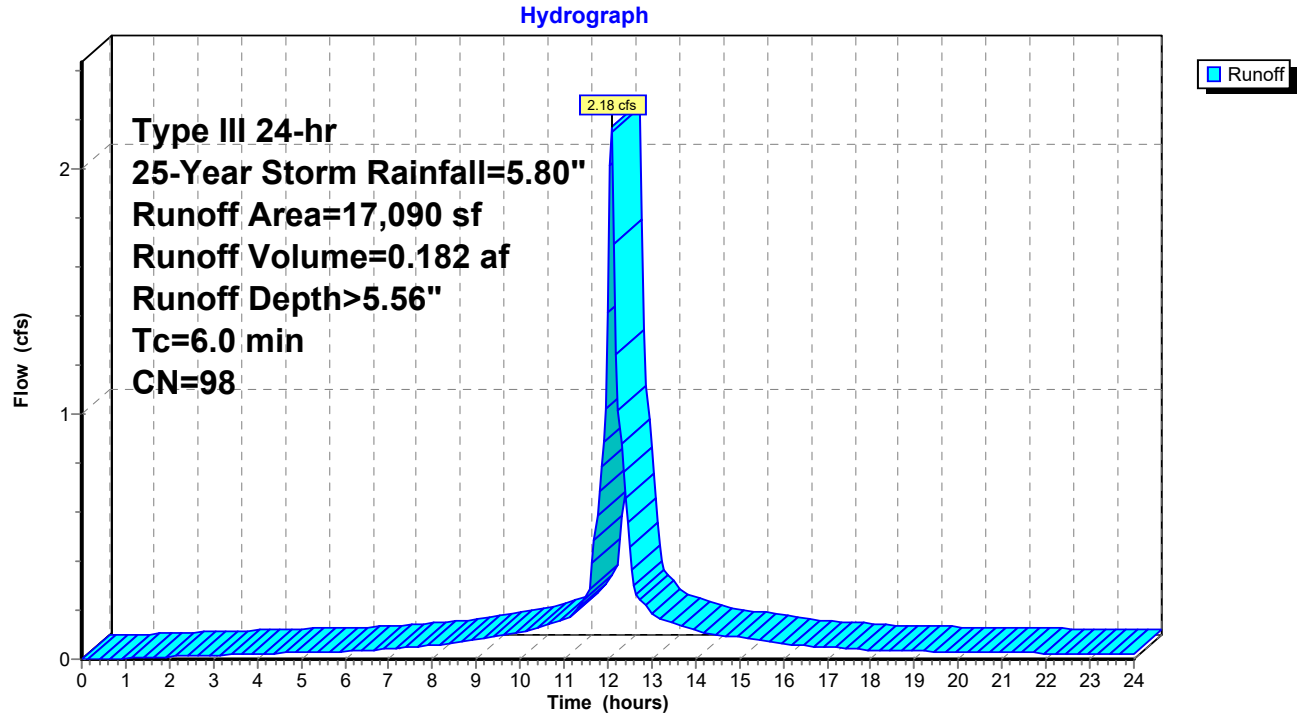

Summary for Subcatchment 4S: Shared Street - Trench Drain

Runoff = 2.81 cfs @ 12.09 hrs, Volume= 0.211 af, Depth> 4.43"

Runoff by SCS TR-20 method, UH=SCS, Weighted-CN, Time Span= 0.00-24.00 hrs, dt= 0.05 hrs
Type III 24-hr 25-Year Storm Rainfall=5.80"

	Area (sf)	CN	Description
	4,345	39	>75% Grass cover, Good, HSG A
*	20,545	98	Impervious Shared Street and Plaza
	24,890	88	Weighted Average
	4,345		17.46% Pervious Area
	20,545		82.54% Impervious Area

Tc (min)	Length (feet)	Slope (ft/ft)	Velocity (ft/sec)	Capacity (cfs)	Description
6.0					**Direct Entry,**

Subcatchment 4S: Shared Street - Trench Drain

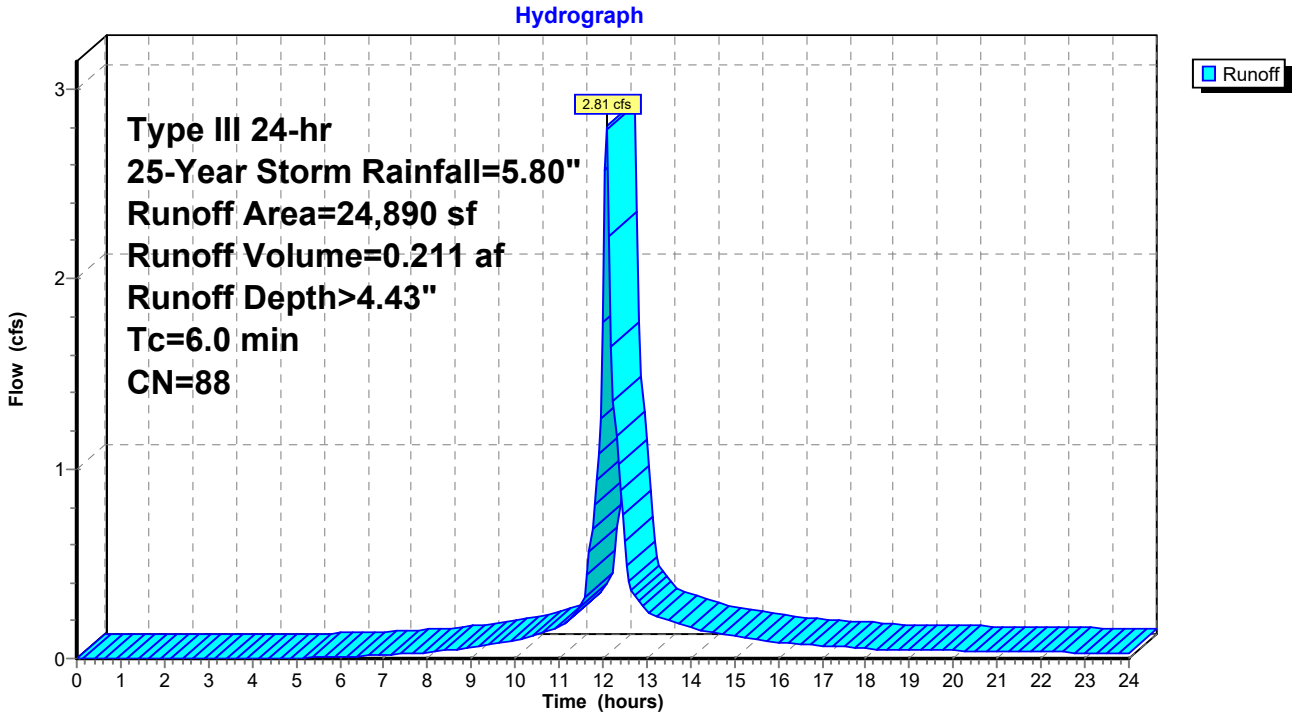

Summary for Subcatchment 5S: Building 12

Runoff = 0.41 cfs @ 12.09 hrs, Volume= 0.034 af, Depth> 5.56"

Runoff by SCS TR-20 method, UH=SCS, Weighted-CN, Time Span= 0.00-24.00 hrs, dt= 0.05 hrs
Type III 24-hr 25-Year Storm Rainfall=5.80"

	Area (sf)	CN	Description
*	3,244	98	Roof
	3,244		100.00% Impervious Area

Tc (min)	Length (feet)	Slope (ft/ft)	Velocity (ft/sec)	Capacity (cfs)	Description
6.0					**Direct Entry,**

Subcatchment 5S: Building 12

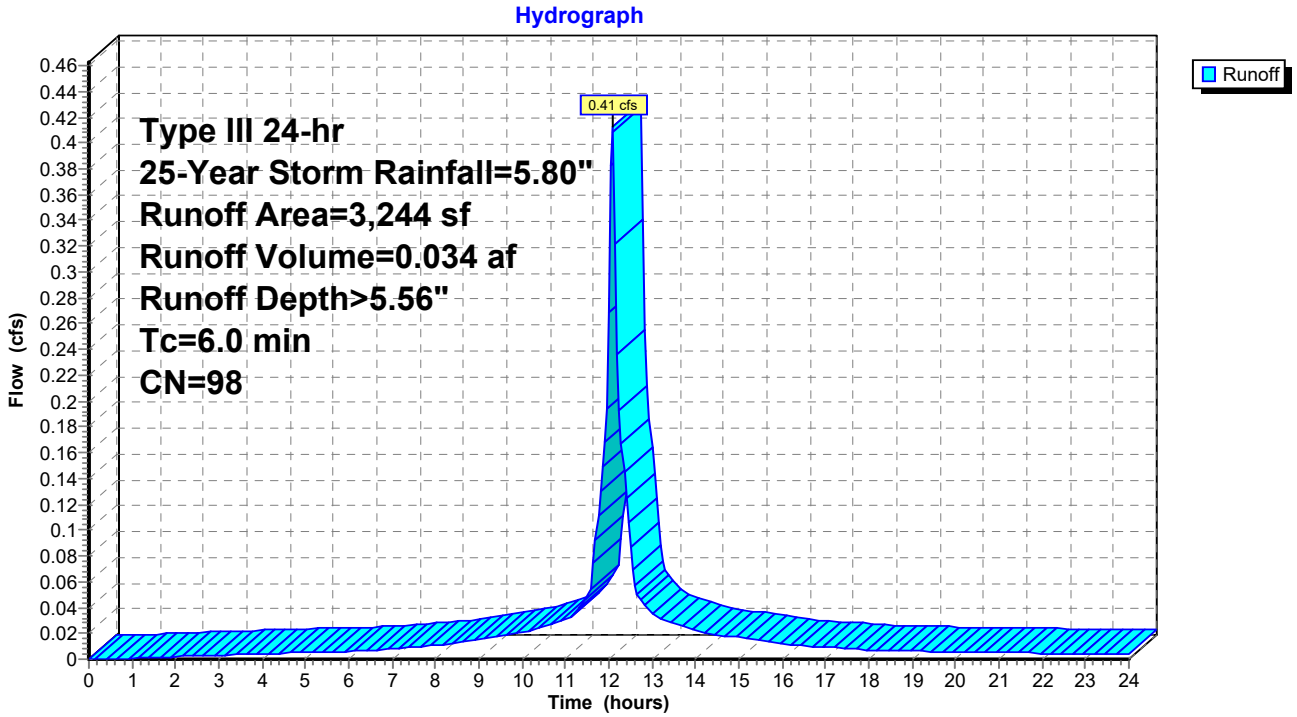

Summary for Subcatchment 6Sa: Plaza between Blocks 1 & 2

Runoff = 2.54 cfs @ 12.09 hrs, Volume= 0.203 af, Depth> 5.21"

Runoff by SCS TR-20 method, UH=SCS, Weighted-CN, Time Span= 0.00-24.00 hrs, dt= 0.05 hrs
Type III 24-hr 25-Year Storm Rainfall=5.80"

	Area (sf)	CN	Description
*	19,288	98	Impervious
	1,049	39	>75% Grass cover, Good, HSG A
	20,337	95	Weighted Average
	1,049		5.16% Pervious Area
	19,288		94.84% Impervious Area

Tc (min)	Length (feet)	Slope (ft/ft)	Velocity (ft/sec)	Capacity (cfs)	Description
6.0					**Direct Entry,**

Subcatchment 6Sa: Plaza between Blocks 1 & 2

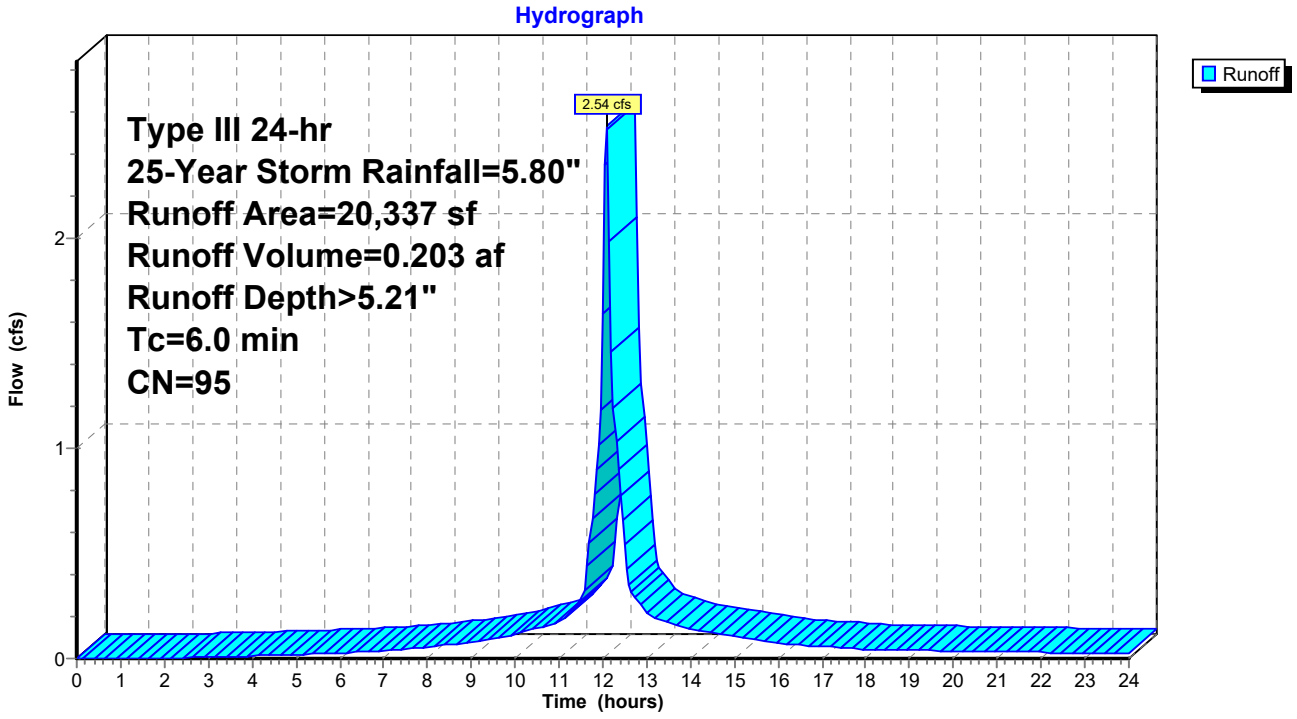

Summary for Subcatchment 6Sb: Plaza between Blocks 1 & 2

Runoff = 0.30 cfs @ 12.09 hrs, Volume= 0.022 af, Depth> 3.70"

Runoff by SCS TR-20 method, UH=SCS, Weighted-CN, Time Span= 0.00-24.00 hrs, dt= 0.05 hrs
Type III 24-hr 25-Year Storm Rainfall=5.80"

	Area (sf)	CN	Description
*	2,240	98	Impervious
	882	39	>75% Grass cover, Good, HSG A
	3,122	81	Weighted Average
	882		28.25% Pervious Area
	2,240		71.75% Impervious Area

Tc (min)	Length (feet)	Slope (ft/ft)	Velocity (ft/sec)	Capacity (cfs)	Description
6.0					**Direct Entry,**

Subcatchment 6Sb: Plaza between Blocks 1 & 2

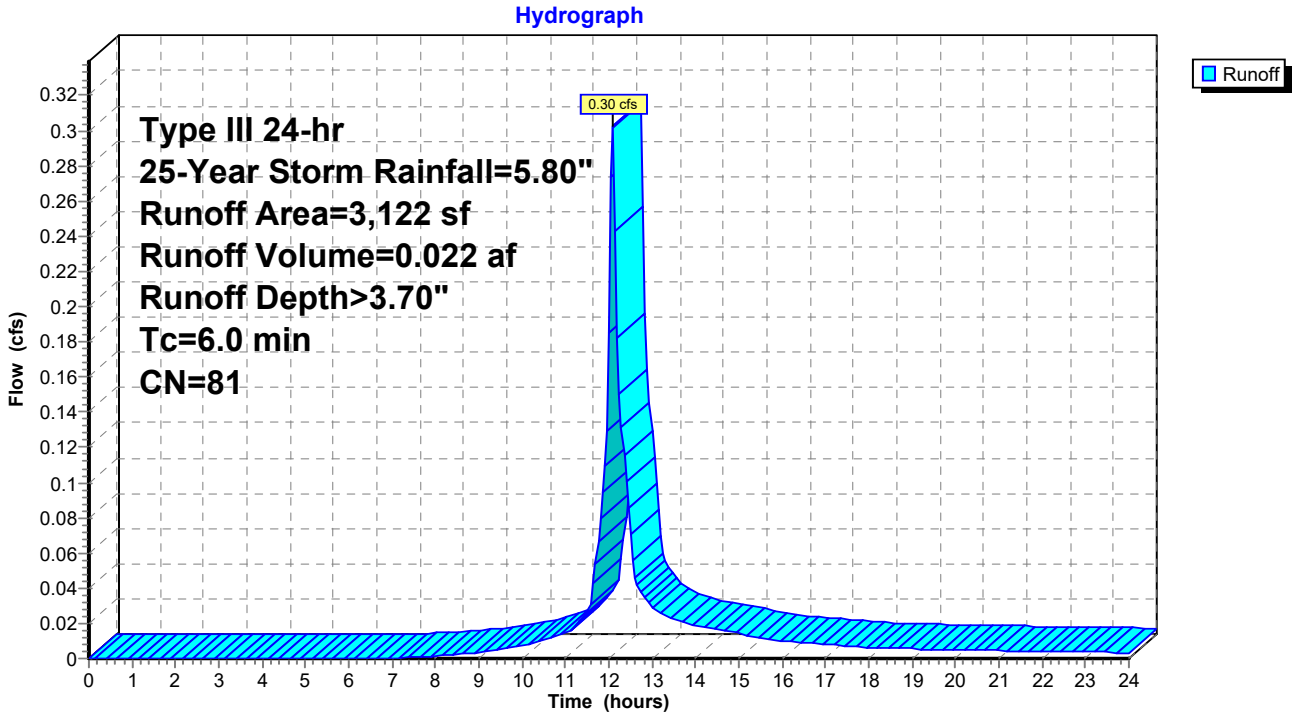

Summary for Subcatchment 7S: Building 14

Runoff = 0.33 cfs @ 12.09 hrs, Volume= 0.027 af, Depth> 5.56"

Runoff by SCS TR-20 method, UH=SCS, Weighted-CN, Time Span= 0.00-24.00 hrs, dt= 0.05 hrs
Type III 24-hr 25-Year Storm Rainfall=5.80"

	Area (sf)	CN	Description
*	2,572	98	Roof
	2,572		100.00% Impervious Area

Tc (min)	Length (feet)	Slope (ft/ft)	Velocity (ft/sec)	Capacity (cfs)	Description
6.0					**Direct Entry,**

Subcatchment 7S: Building 14

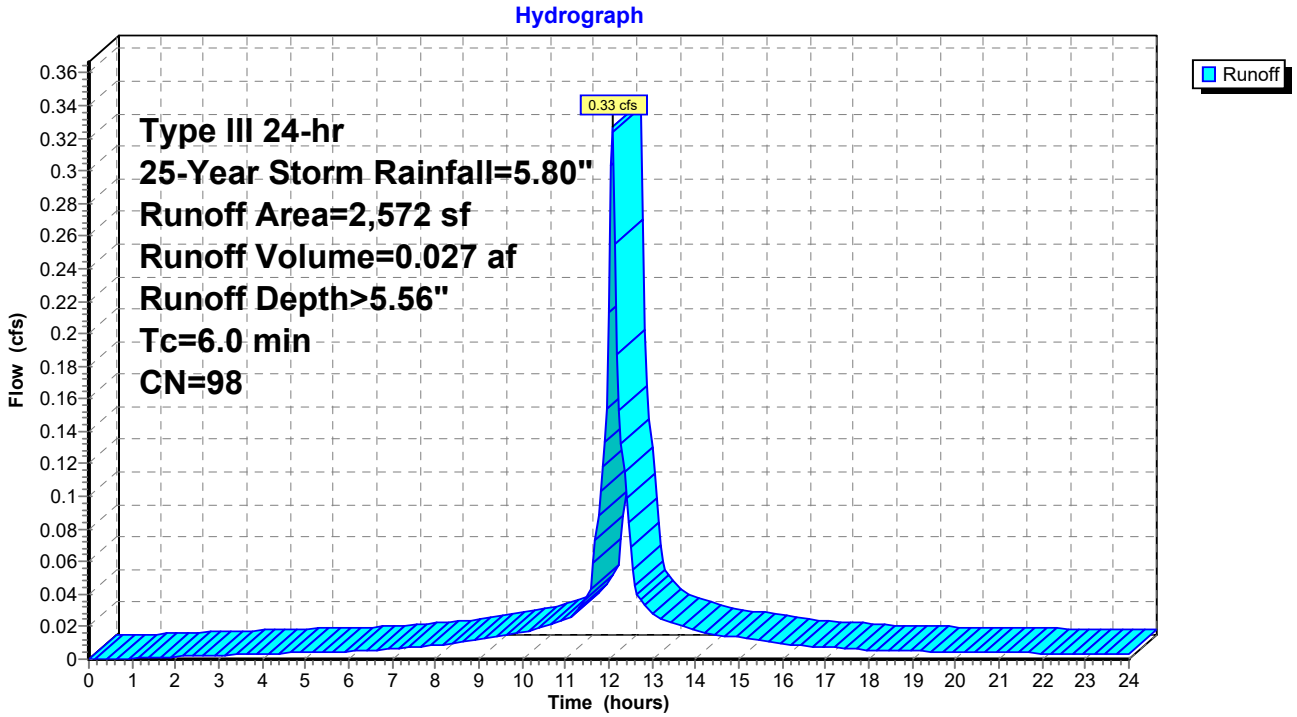

Summary for Subcatchment 8S: Building 15

Runoff = 0.57 cfs @ 12.09 hrs, Volume= 0.048 af, Depth> 5.56"

Runoff by SCS TR-20 method, UH=SCS, Weighted-CN, Time Span= 0.00-24.00 hrs, dt= 0.05 hrs
Type III 24-hr 25-Year Storm Rainfall=5.80"

	Area (sf)	CN	Description
*	4,507	98	Roof
	4,507		100.00% Impervious Area

Tc (min)	Length (feet)	Slope (ft/ft)	Velocity (ft/sec)	Capacity (cfs)	Description
6.0					**Direct Entry,**

Subcatchment 8S: Building 15

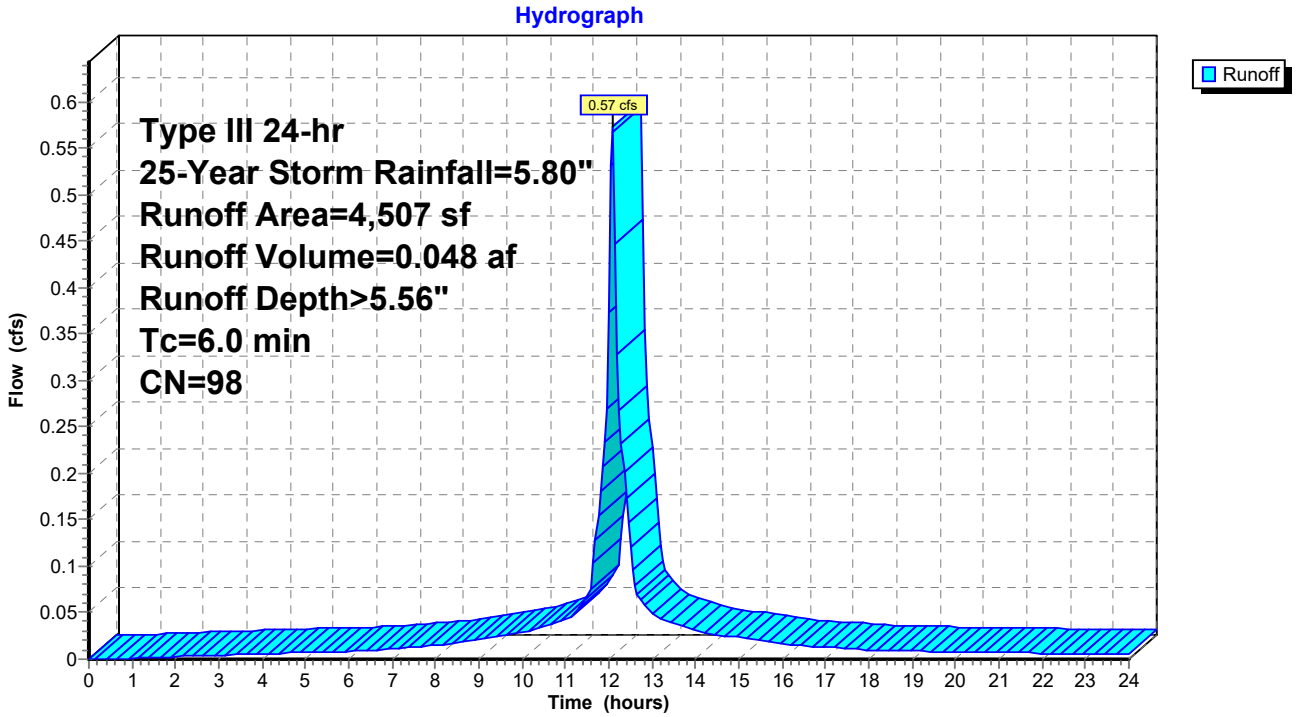

Summary for Subcatchment 9S: Building 2 North

Runoff = 0.60 cfs @ 12.09 hrs, Volume= 0.050 af, Depth> 5.56"

Runoff by SCS TR-20 method, UH=SCS, Weighted-CN, Time Span= 0.00-24.00 hrs, dt= 0.05 hrs
Type III 24-hr 25-Year Storm Rainfall=5.80"

	Area (sf)	CN	Description
*	4,695	98	Roof
	4,695		100.00% Impervious Area

Tc (min)	Length (feet)	Slope (ft/ft)	Velocity (ft/sec)	Capacity (cfs)	Description
6.0					**Direct Entry,**

Subcatchment 9S: Building 2 North

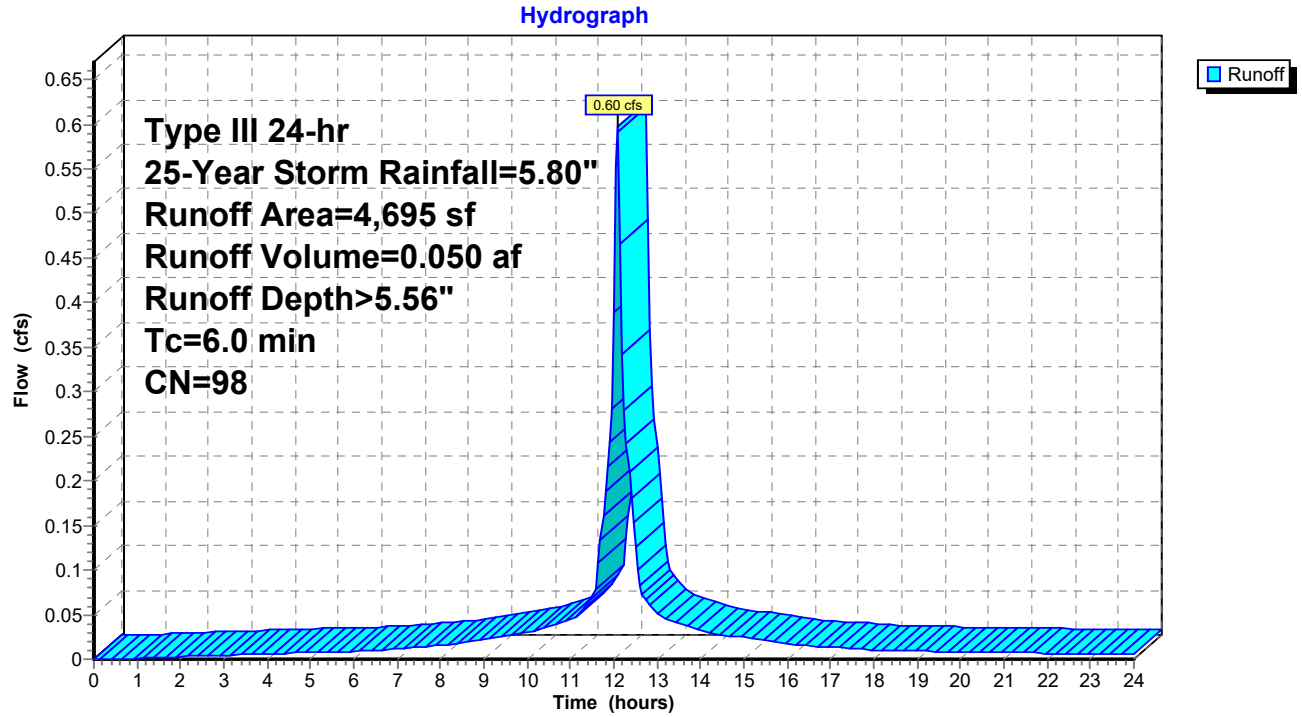

Summary for Subcatchment 10S: Building 3 North

Runoff = 0.28 cfs @ 12.09 hrs, Volume= 0.024 af, Depth> 5.56"

Runoff by SCS TR-20 method, UH=SCS, Weighted-CN, Time Span= 0.00-24.00 hrs, dt= 0.05 hrs
Type III 24-hr 25-Year Storm Rainfall=5.80"

	Area (sf)	CN	Description
*	2,212	98	Roof
	2,212		100.00% Impervious Area

Tc (min)	Length (feet)	Slope (ft/ft)	Velocity (ft/sec)	Capacity (cfs)	Description
6.0					**Direct Entry,**

Subcatchment 10S: Building 3 North

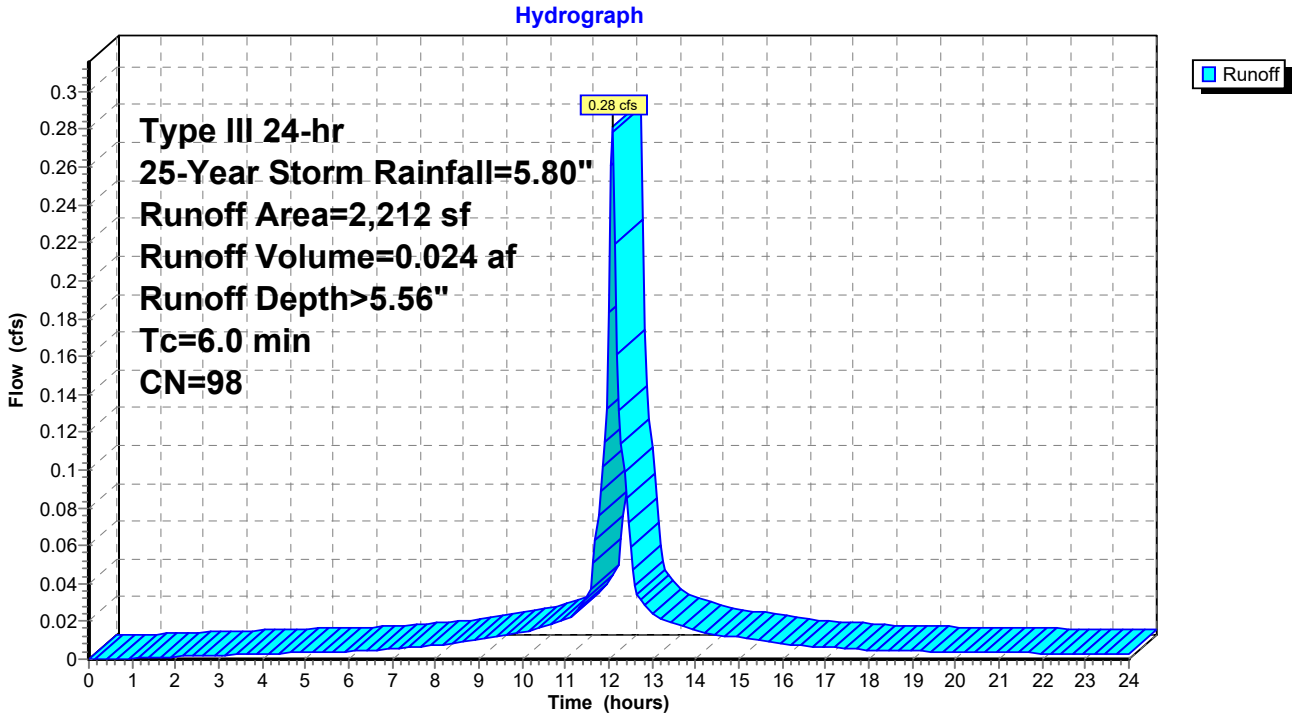

Summary for Subcatchment 11S: Building 2 South

Runoff = 0.62 cfs @ 12.09 hrs, Volume= 0.052 af, Depth> 5.56"

Runoff by SCS TR-20 method, UH=SCS, Weighted-CN, Time Span= 0.00-24.00 hrs, dt= 0.05 hrs
Type III 24-hr 25-Year Storm Rainfall=5.80"

	Area (sf)	CN	Description
*	4,855	98	Roof
	4,855		100.00% Impervious Area

Tc (min)	Length (feet)	Slope (ft/ft)	Velocity (ft/sec)	Capacity (cfs)	Description
6.0					**Direct Entry,**

Subcatchment 11S: Building 2 South

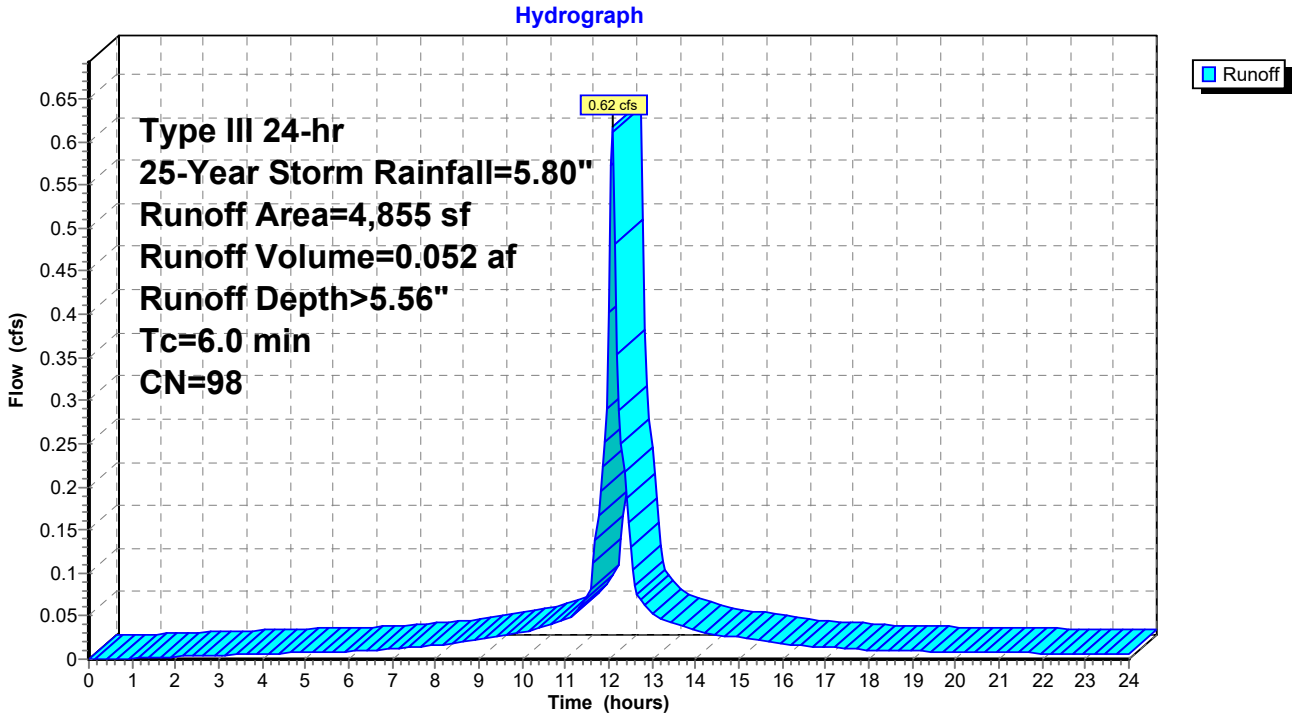

Summary for Subcatchment 12S: Building 3 South

Runoff = 0.30 cfs @ 12.09 hrs, Volume= 0.025 af, Depth> 5.56"

Runoff by SCS TR-20 method, UH=SCS, Weighted-CN, Time Span= 0.00-24.00 hrs, dt= 0.05 hrs
Type III 24-hr 25-Year Storm Rainfall=5.80"

	Area (sf)	CN	Description
*	2,326	98	Roof
	2,326		100.00% Impervious Area

Tc (min)	Length (feet)	Slope (ft/ft)	Velocity (ft/sec)	Capacity (cfs)	Description
6.0					**Direct Entry,**

Subcatchment 12S: Building 3 South

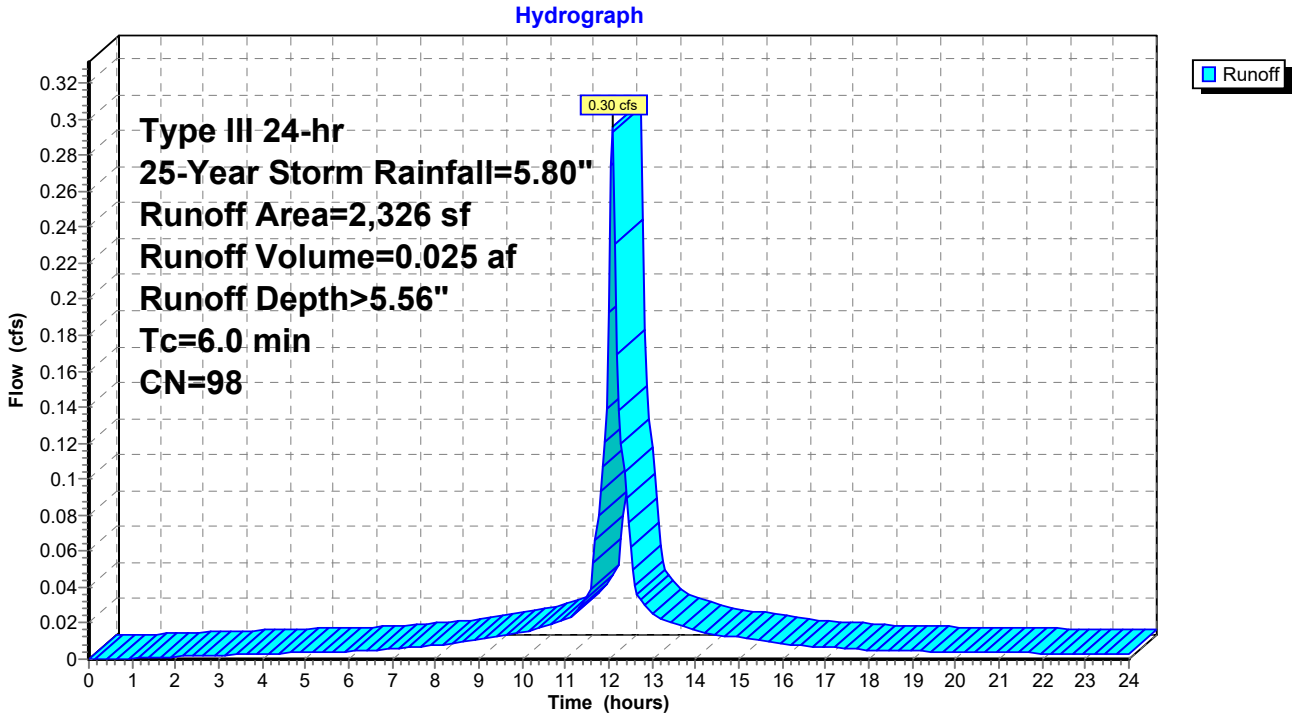

Summary for Subcatchment 13S: Building 6

Runoff = 0.42 cfs @ 12.09 hrs, Volume= 0.035 af, Depth> 5.56"

Runoff by SCS TR-20 method, UH=SCS, Weighted-CN, Time Span= 0.00-24.00 hrs, dt= 0.05 hrs
Type III 24-hr 25-Year Storm Rainfall=5.80"

	Area (sf)	CN	Description
*	3,304	98	Roof
	3,304		100.00% Impervious Area

Tc (min)	Length (feet)	Slope (ft/ft)	Velocity (ft/sec)	Capacity (cfs)	Description
6.0					**Direct Entry,**

Subcatchment 13S: Building 6

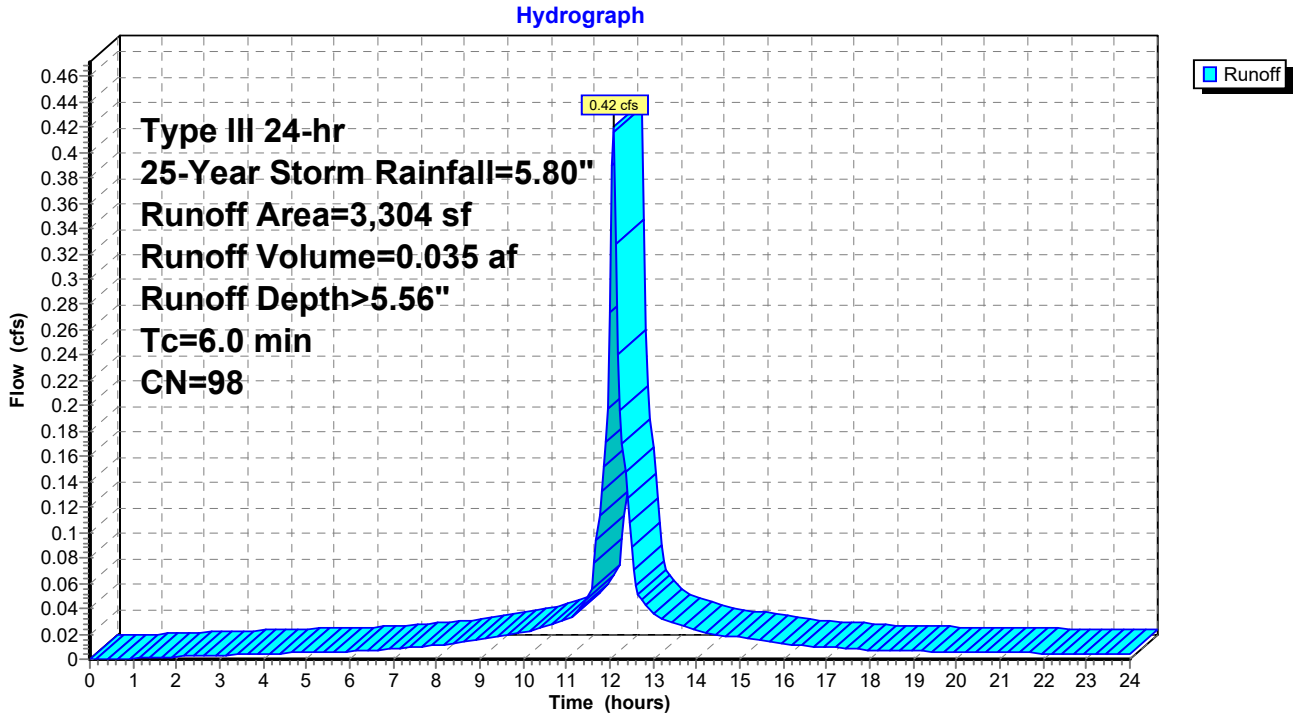

Summary for Subcatchment 14S: Building 6B North

Runoff = 0.49 cfs @ 12.09 hrs, Volume= 0.041 af, Depth> 5.56"

Runoff by SCS TR-20 method, UH=SCS, Weighted-CN, Time Span= 0.00-24.00 hrs, dt= 0.05 hrs
Type III 24-hr 25-Year Storm Rainfall=5.80"

	Area (sf)	CN	Description
*	3,873	98	Roof
	3,873		100.00% Impervious Area

Tc (min)	Length (feet)	Slope (ft/ft)	Velocity (ft/sec)	Capacity (cfs)	Description
6.0					**Direct Entry,**

Subcatchment 14S: Building 6B North

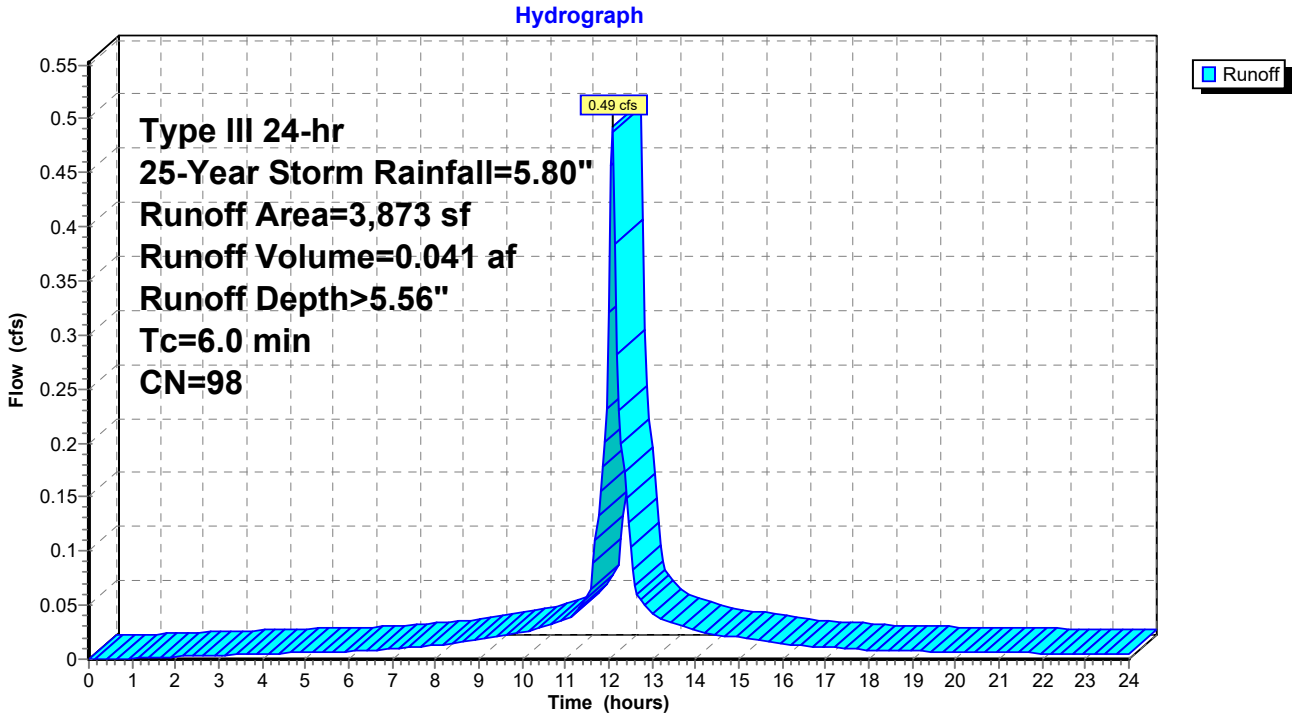

Summary for Subcatchment 15S: Building 6B South

Runoff = 0.32 cfs @ 12.09 hrs, Volume= 0.027 af, Depth> 5.56"

Runoff by SCS TR-20 method, UH=SCS, Weighted-CN, Time Span= 0.00-24.00 hrs, dt= 0.05 hrs
Type III 24-hr 25-Year Storm Rainfall=5.80"

	Area (sf)	CN	Description
*	2,512	98	Roof
	2,512		100.00% Impervious Area

Tc (min)	Length (feet)	Slope (ft/ft)	Velocity (ft/sec)	Capacity (cfs)	Description
6.0					**Direct Entry,**

Subcatchment 15S: Building 6B South

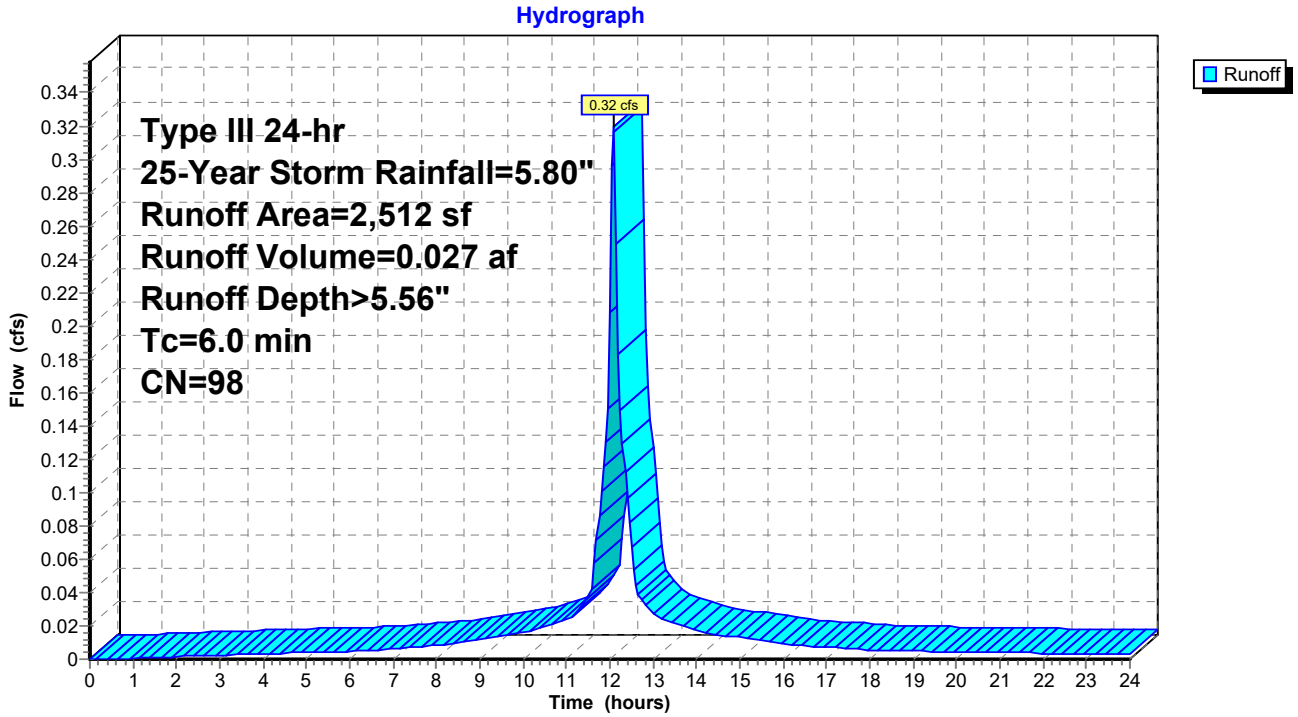

Summary for Subcatchment 16S: Shared Street - Trench Drain

Runoff = 1.14 cfs @ 12.09 hrs, Volume= 0.095 af, Depth> 5.56"

Runoff by SCS TR-20 method, UH=SCS, Weighted-CN, Time Span= 0.00-24.00 hrs, dt= 0.05 hrs
Type III 24-hr 25-Year Storm Rainfall=5.80"

	Area (sf)	CN	Description
	0	39	>75% Grass cover, Good, HSG A
*	8,931	98	Impervious Shared Street
	8,931	98	Weighted Average
	8,931		100.00% Impervious Area

Tc (min)	Length (feet)	Slope (ft/ft)	Velocity (ft/sec)	Capacity (cfs)	Description
6.0					**Direct Entry,**

Subcatchment 16S: Shared Street - Trench Drain

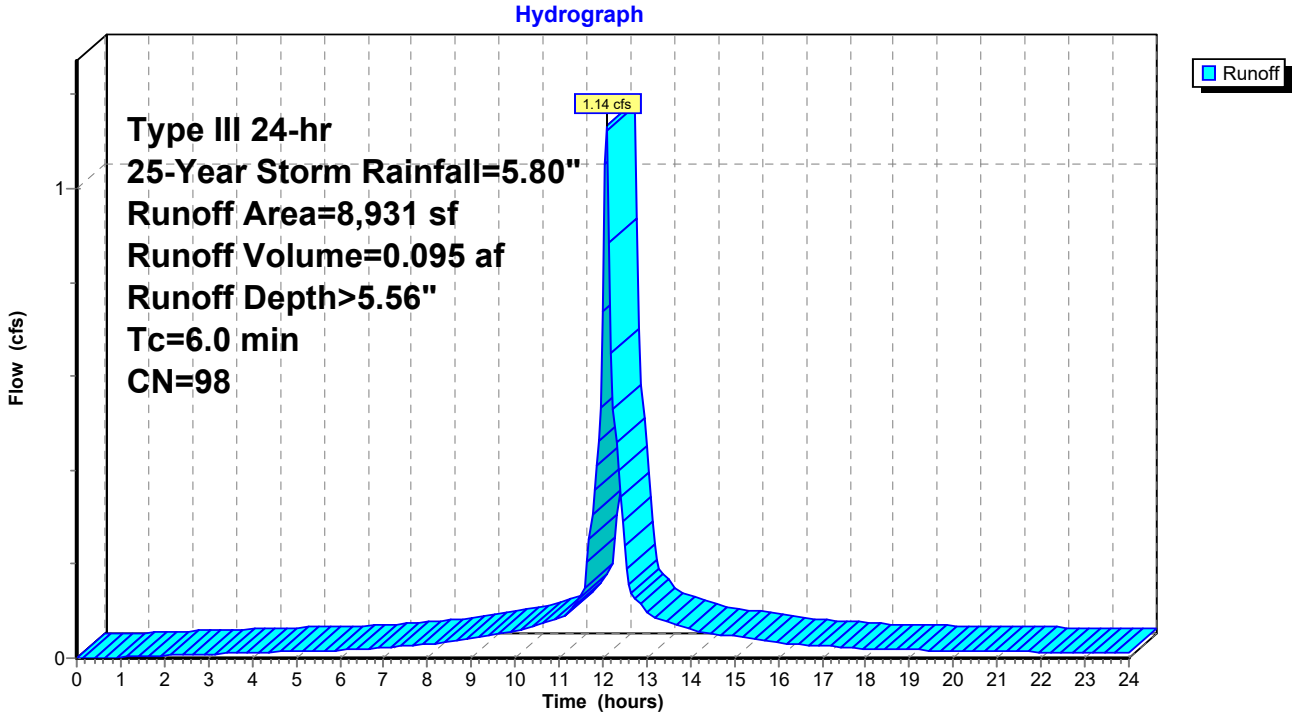

Summary for Subcatchment 17S: Future Block 3 Building Footprint

Runoff = 1.27 cfs @ 12.09 hrs, Volume= 0.106 af, Depth> 5.56"

Runoff by SCS TR-20 method, UH=SCS, Weighted-CN, Time Span= 0.00-24.00 hrs, dt= 0.05 hrs
Type III 24-hr 25-Year Storm Rainfall=5.80"

	Area (sf)	CN	Description
*	9,998	98	Gravel
	9,998		100.00% Impervious Area

Tc (min)	Length (feet)	Slope (ft/ft)	Velocity (ft/sec)	Capacity (cfs)	Description
6.0					**Direct Entry,**

Subcatchment 17S: Future Block 3 Building Footprint

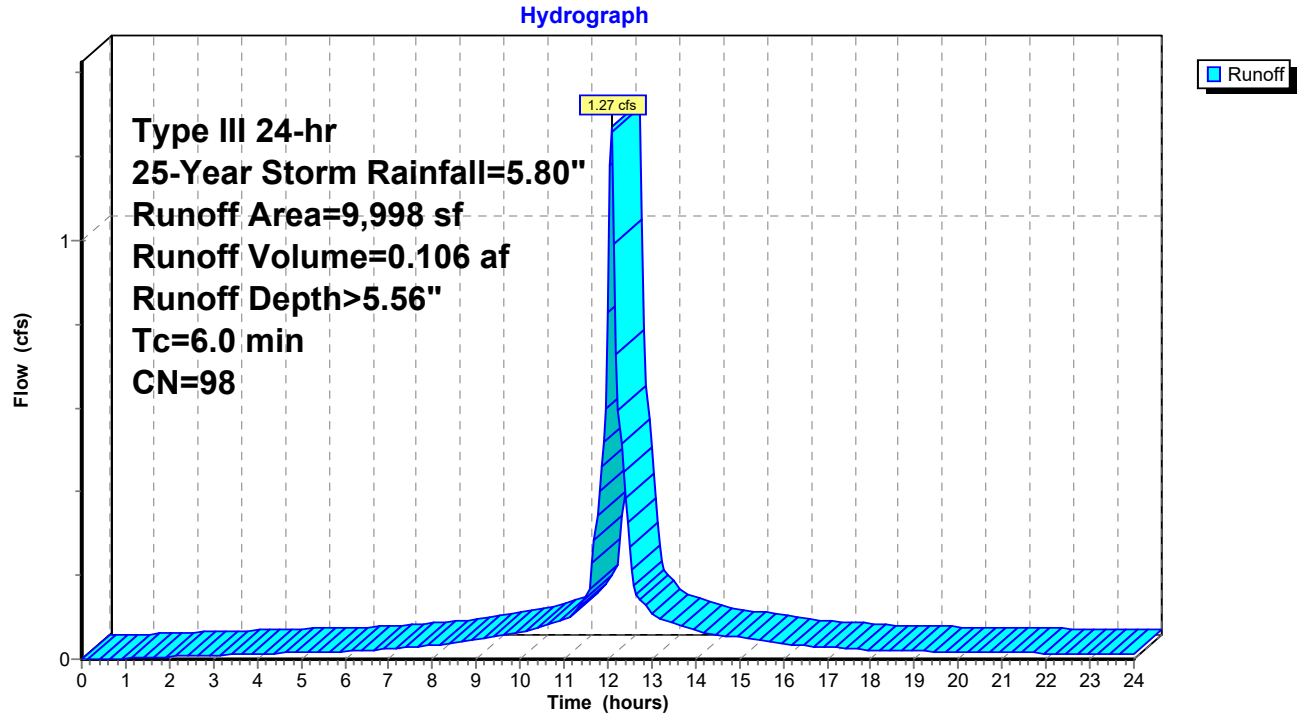

Summary for Subcatchment 18S: Plaza between Blocks 2 & 4

Runoff = 2.61 cfs @ 12.09 hrs, Volume= 0.218 af, Depth> 5.56"

Runoff by SCS TR-20 method, UH=SCS, Weighted-CN, Time Span= 0.00-24.00 hrs, dt= 0.05 hrs
Type III 24-hr 25-Year Storm Rainfall=5.80"

	Area (sf)	CN	Description
*	20,352	98	Impervious
	106	39	>75% Grass cover, Good, HSG A
	20,458	98	Weighted Average
	106		0.52% Pervious Area
	20,352		99.48% Impervious Area

Tc (min)	Length (feet)	Slope (ft/ft)	Velocity (ft/sec)	Capacity (cfs)	Description
6.0					**Direct Entry,**

Subcatchment 18S: Plaza between Blocks 2 & 4

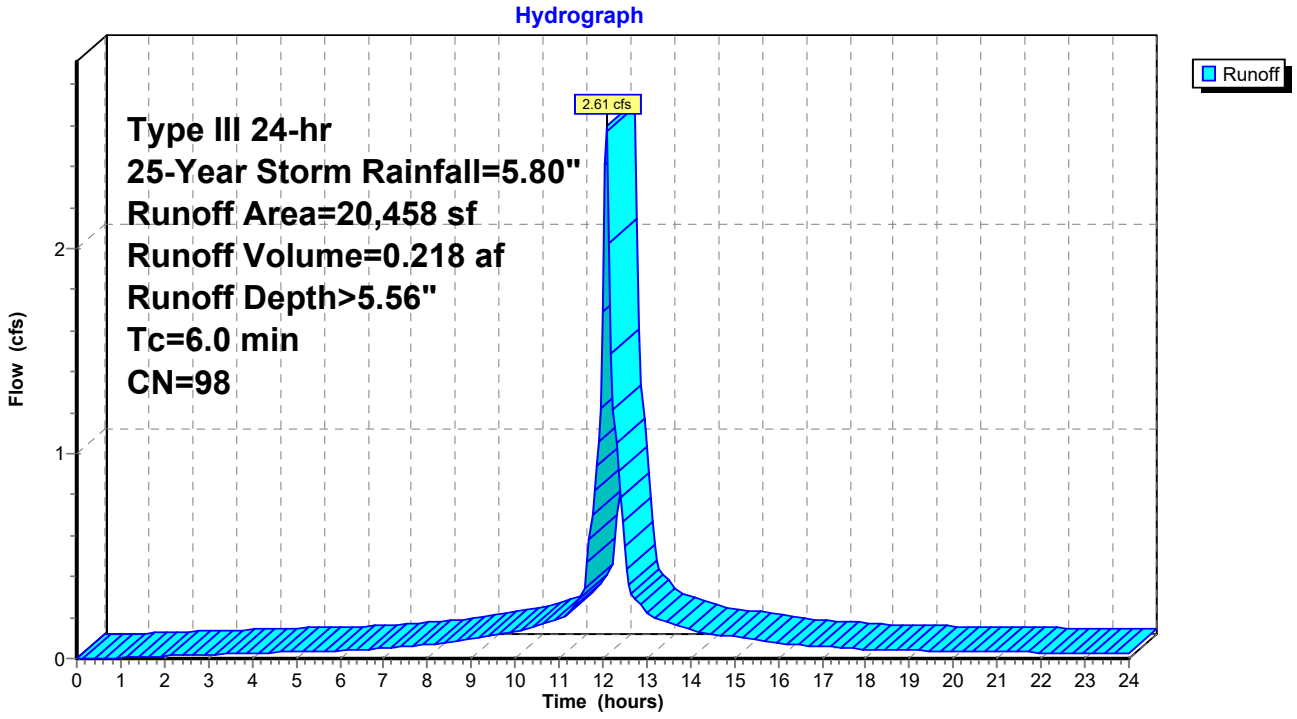

Summary for Subcatchment 19S: Building 4A

Runoff = 8.82 cfs @ 12.09 hrs, Volume= 0.737 af, Depth> 5.56"

Runoff by SCS TR-20 method, UH=SCS, Weighted-CN, Time Span= 0.00-24.00 hrs, dt= 0.05 hrs
Type III 24-hr 25-Year Storm Rainfall=5.80"

	Area (sf)	CN	Description
*	69,274	98	Roof
	69,274		100.00% Impervious Area

Tc (min)	Length (feet)	Slope (ft/ft)	Velocity (ft/sec)	Capacity (cfs)	Description
6.0					**Direct Entry,**

Subcatchment 19S: Building 4A

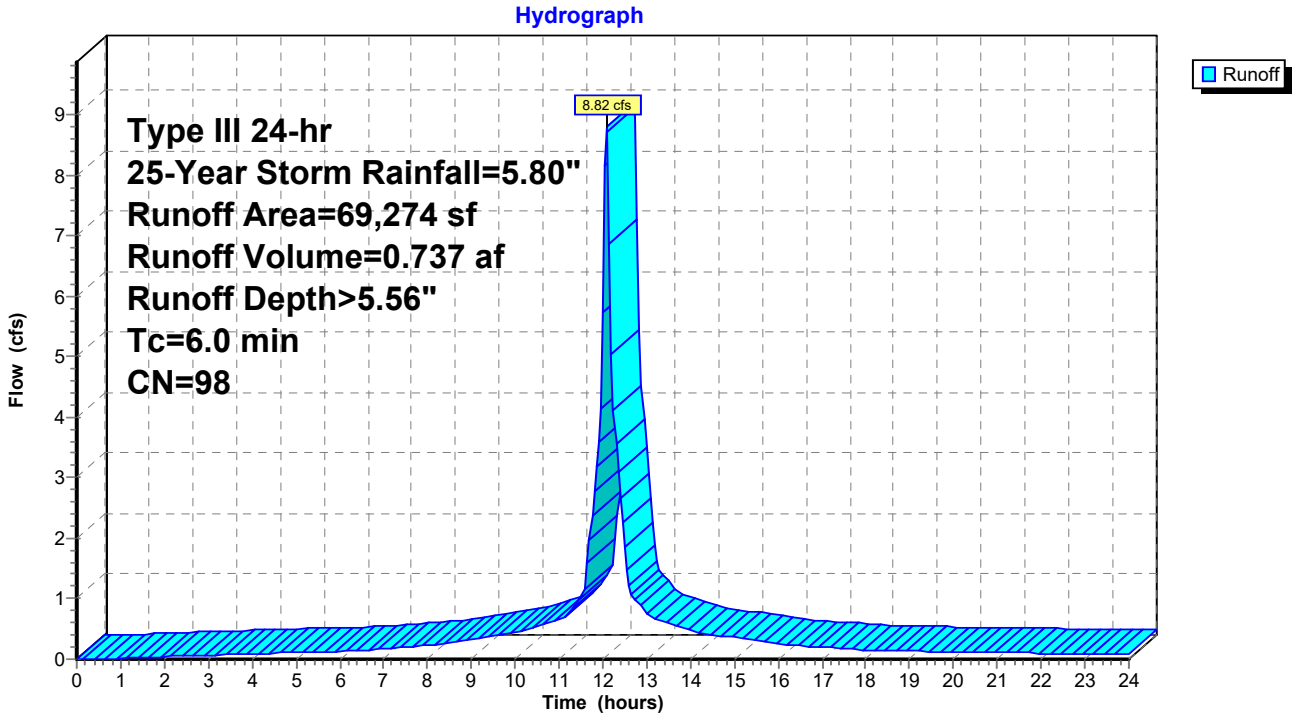

Summary for Subcatchment 20S: Redevelopment area east and south of Building 4A

Runoff = 0.33 cfs @ 12.10 hrs, Volume= 0.024 af, Depth> 2.64"

Runoff by SCS TR-20 method, UH=SCS, Weighted-CN, Time Span= 0.00-24.00 hrs, dt= 0.05 hrs
Type III 24-hr 25-Year Storm Rainfall=5.80"

	Area (sf)	CN	Description
*	2,489	98	Impervious
	2,270	39	>75% Grass cover, Good, HSG A
	4,759	70	Weighted Average
	2,270		47.70% Pervious Area
	2,489		52.30% Impervious Area

Tc (min)	Length (feet)	Slope (ft/ft)	Velocity (ft/sec)	Capacity (cfs)	Description
6.0					**Direct Entry,**

Subcatchment 20S: Redevelopment area east and south of Building 4A

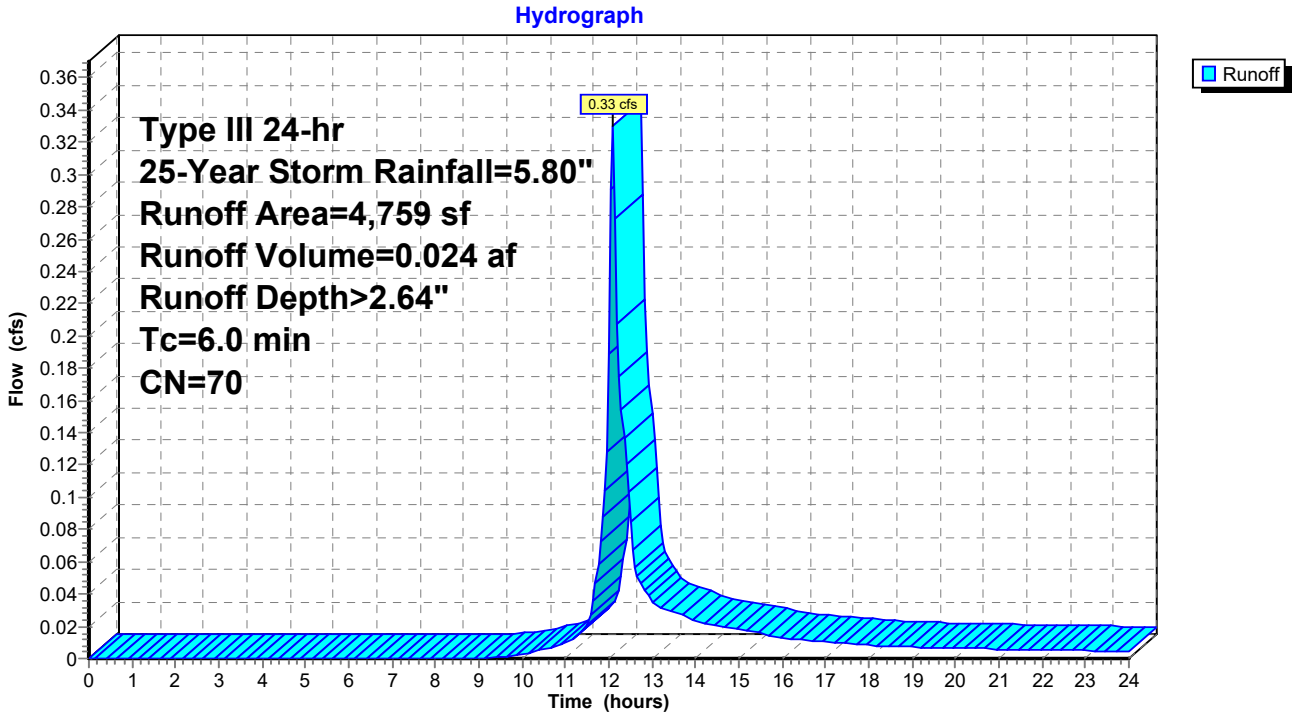

Summary for Subcatchment 21S: Eastern Waterfront

Runoff = 8.64 cfs @ 12.09 hrs, Volume= 0.632 af, Depth> 3.80"

Runoff by SCS TR-20 method, UH=SCS, Weighted-CN, Time Span= 0.00-24.00 hrs, dt= 0.05 hrs
Type III 24-hr 25-Year Storm Rainfall=5.80"

	Area (sf)	CN	Description
*	63,527	98	Impervious
	23,372	39	>75% Grass cover, Good, HSG A
	86,899	82	Weighted Average
	23,372		26.90% Pervious Area
	63,527		73.10% Impervious Area

Tc (min)	Length (feet)	Slope (ft/ft)	Velocity (ft/sec)	Capacity (cfs)	Description
6.0					**Direct Entry,**

Subcatchment 21S: Eastern Waterfront

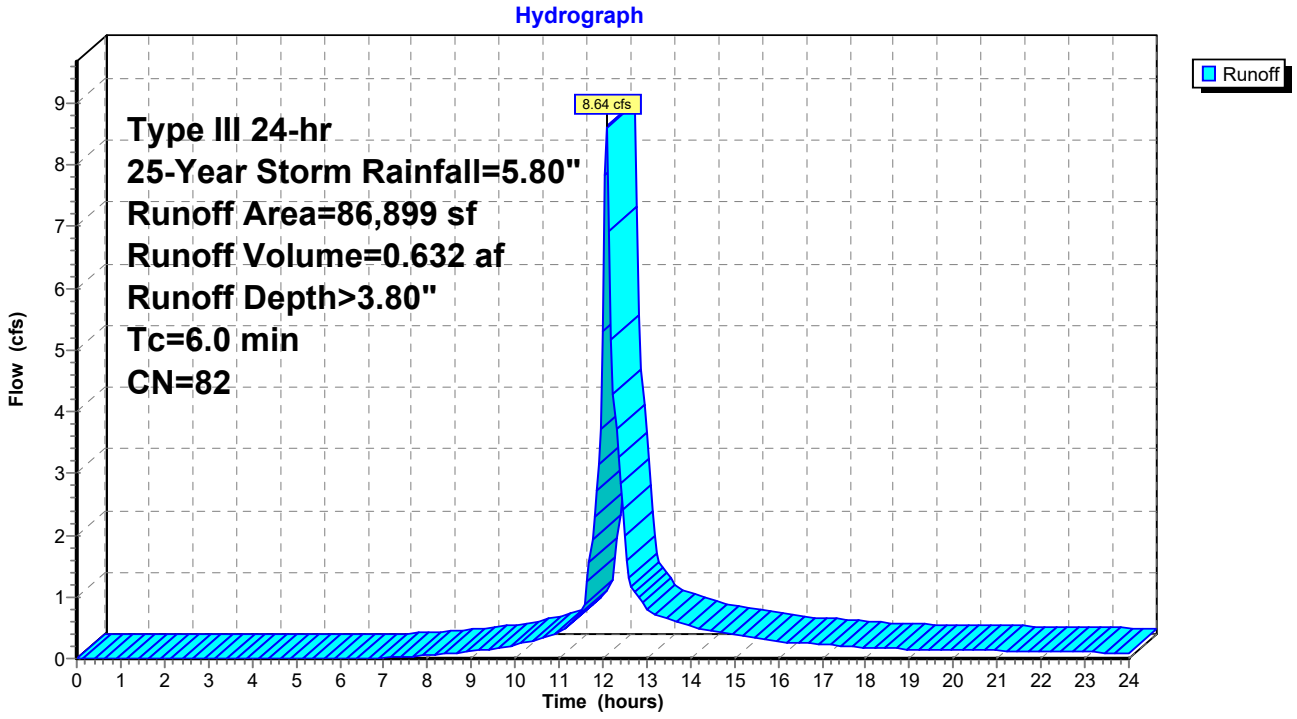

Summary for Pond 1P: DMH 1

Inflow Area = 1.783 ac, 93.06% Impervious, Inflow Depth > 5.11" for 25-Year Storm event
Inflow = 9.48 cfs @ 12.09 hrs, Volume= 0.759 af
Outflow = 9.48 cfs @ 12.09 hrs, Volume= 0.759 af, Atten= 0%, Lag= 0.0 min
Primary = 9.48 cfs @ 12.09 hrs, Volume= 0.759 af

Routing by Stor-Ind method, Time Span= 0.00-24.00 hrs, dt= 0.05 hrs
Peak Elev= 11.80' @ 12.09 hrs
Flood Elev= 14.71'

Device	Routing	Invert	Outlet Devices
#1	Primary	9.77'	**21.0" Round Culvert** L= 61.0' CPP, projecting, no headwall, Ke= 0.900 Inlet / Outlet Invert= 9.77' / 9.54' S= 0.0038 '/' Cc= 0.900 n= 0.013 Corrugated PE, smooth interior, Flow Area= 2.41 sf

Primary OutFlow Max=9.24 cfs @ 12.09 hrs HW=11.75' (Free Discharge)
1=Culvert (Barrel Controls 9.24 cfs @ 4.24 fps)

Pond 1P: DMH 1

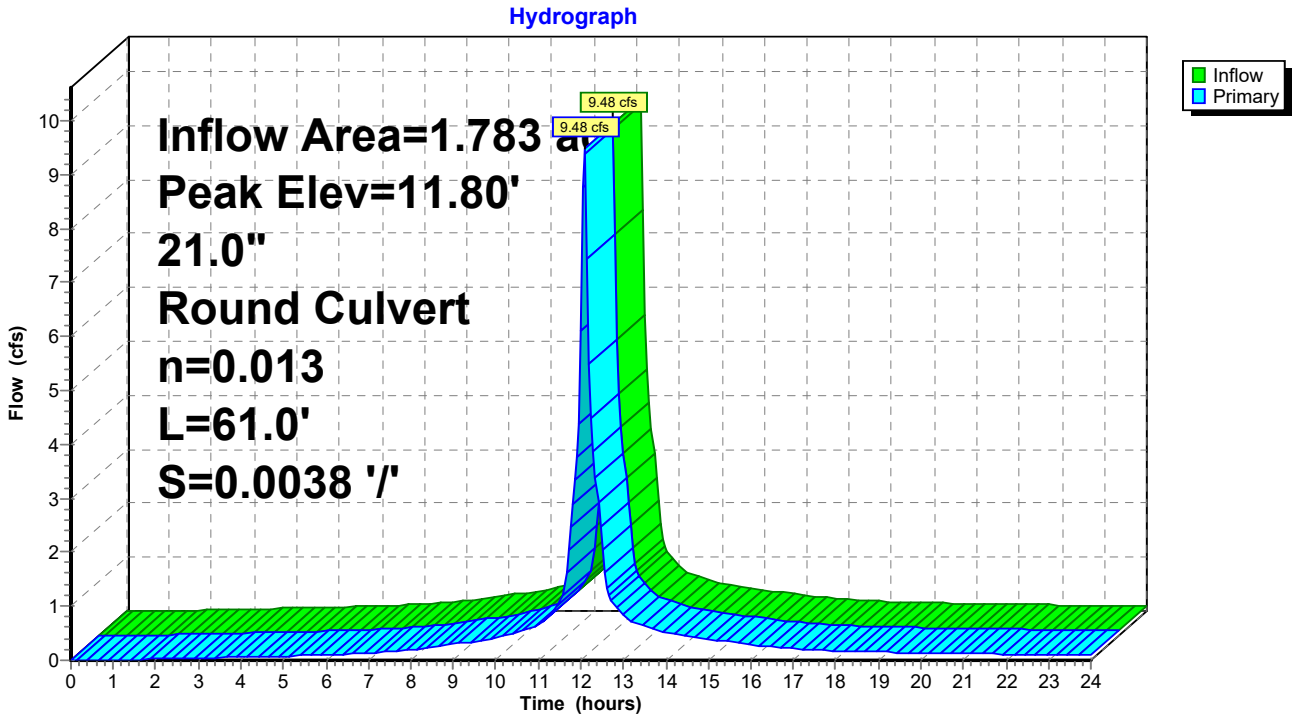

Summary for Pond 2P: DMH 2

Inflow Area = 1.931 ac, 92.54% Impervious, Inflow Depth > 5.07" for 25-Year Storm event
Inflow = 10.20 cfs @ 12.09 hrs, Volume= 0.816 af
Outflow = 10.20 cfs @ 12.09 hrs, Volume= 0.816 af, Atten= 0%, Lag= 0.0 min
Primary = 10.20 cfs @ 12.09 hrs, Volume= 0.816 af

Routing by Stor-Ind method, Time Span= 0.00-24.00 hrs, dt= 0.05 hrs
Peak Elev= 11.46' @ 12.09 hrs
Flood Elev= 14.63'

Device	Routing	Invert	Outlet Devices
#1	Primary	9.50'	**21.0" Round Culvert** L= 31.0' CPP, square edge headwall, Ke= 0.500 Inlet / Outlet Invert= 9.50' / 9.35' S= 0.0048 '/' Cc= 0.900 n= 0.013 Corrugated PE, smooth interior, Flow Area= 2.41 sf

Primary OutFlow Max=9.94 cfs @ 12.09 hrs HW=11.43' (Free Discharge)
1=Culvert (Barrel Controls 9.94 cfs @ 4.68 fps)

Pond 2P: DMH 2

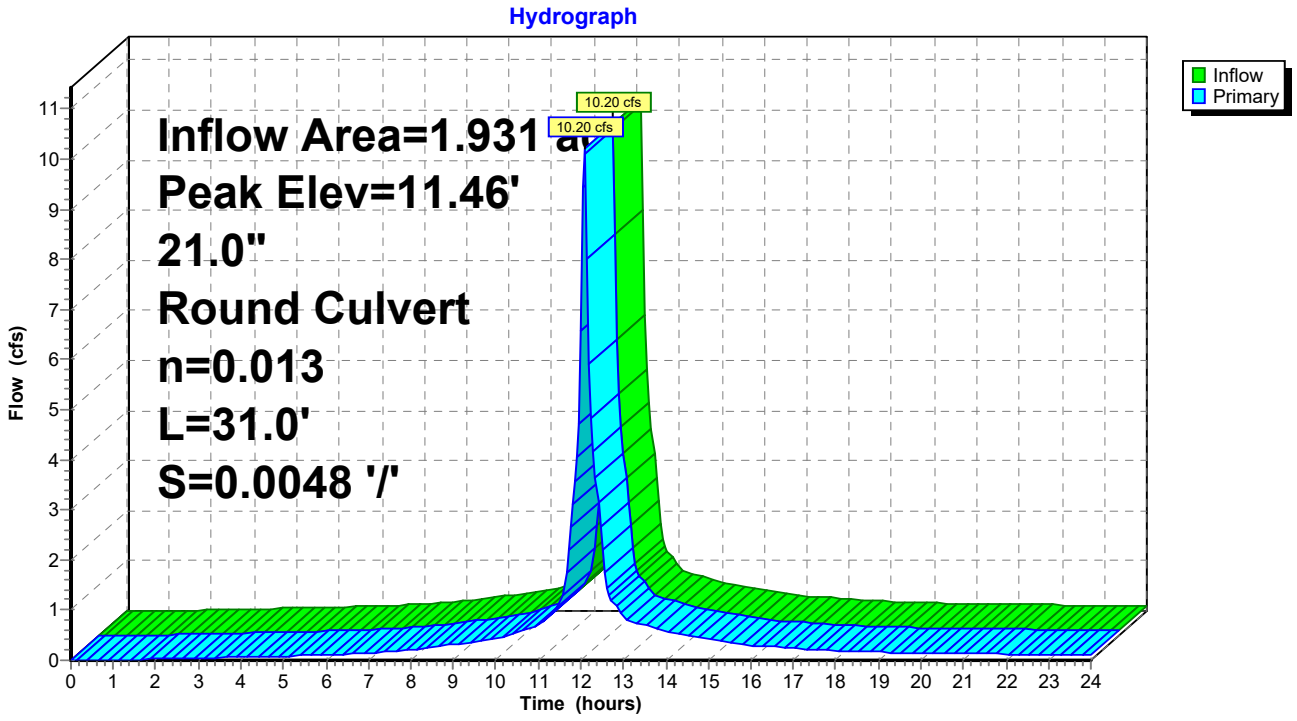

Summary for Pond 3P: Storm Structure

Inflow Area = 1.931 ac, 92.54% Impervious, Inflow Depth > 5.07" for 25-Year Storm event
Inflow = 10.20 cfs @ 12.09 hrs, Volume= 0.816 af
Outflow = 10.20 cfs @ 12.09 hrs, Volume= 0.816 af, Atten= 0%, Lag= 0.0 min
Primary = 10.20 cfs @ 12.09 hrs, Volume= 0.816 af

Routing by Stor-Ind method, Time Span= 0.00-24.00 hrs, dt= 0.05 hrs
Peak Elev= 10.66' @ 12.09 hrs
Flood Elev= 14.51'

Device	Routing	Invert	Outlet Devices
#1	Primary	9.35'	**15.0" Round Culvert X 3.00** L= 4.0' CPP, projecting, no headwall, Ke= 0.900 Inlet / Outlet Invert= 9.35' / 9.35' S= 0.0000 '/' Cc= 0.900 n= 0.013 Corrugated PE, smooth interior, Flow Area= 1.23 sf

Primary OutFlow Max=9.94 cfs @ 12.09 hrs HW=10.64' (Free Discharge)
1=Culvert (Barrel Controls 9.94 cfs @ 3.25 fps)

Pond 3P: Storm Structure

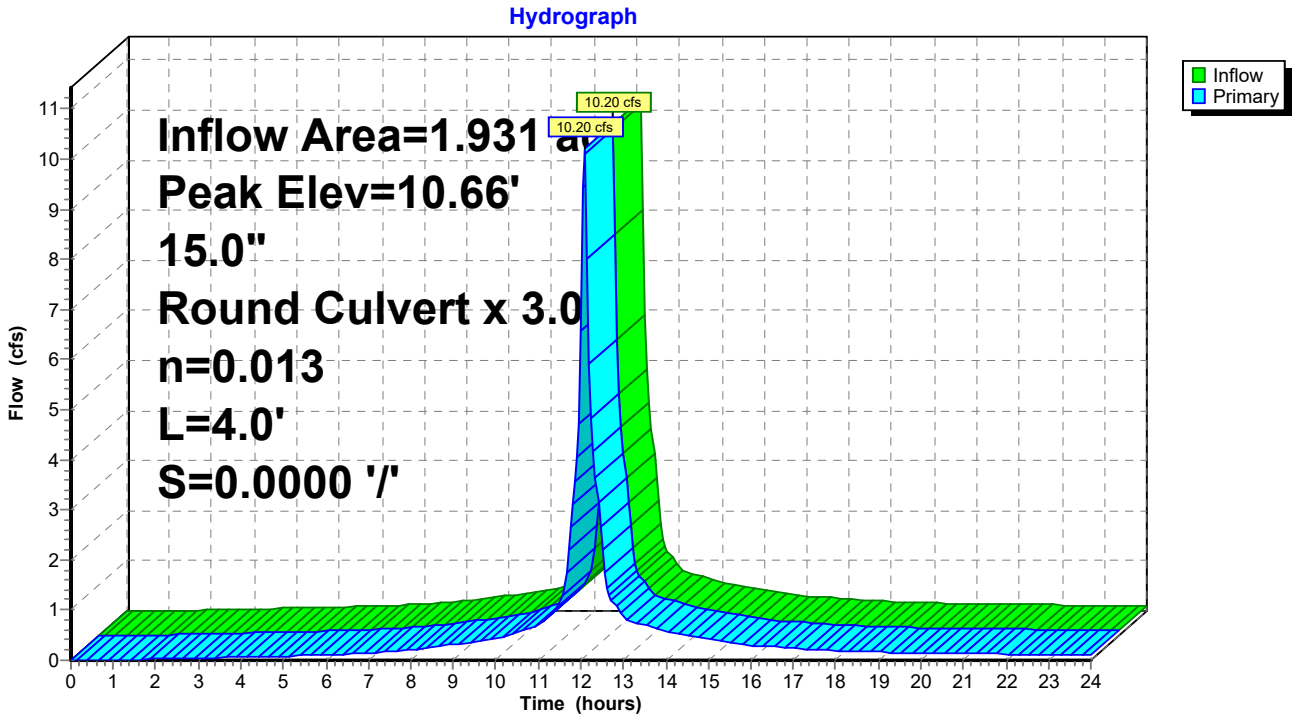

Summary for Pond 4P: R-Tank 1

Inflow Area = 1.931 ac, 92.54% Impervious, Inflow Depth > 5.07" for 25-Year Storm event
Inflow = 10.20 cfs @ 12.09 hrs, Volume= 0.816 af
Outflow = 8.90 cfs @ 12.14 hrs, Volume= 0.807 af, Atten= 13%, Lag= 2.9 min
Primary = 8.90 cfs @ 12.14 hrs, Volume= 0.807 af

Routing by Stor-Ind method, Time Span= 0.00-24.00 hrs, dt= 0.05 hrs
Peak Elev= 9.59' @ 12.14 hrs Surf.Area= 1,597 sf Storage= 2,853 cf
Flood Elev= 10.42' Surf.Area= 1,597 sf Storage= 3,504 cf

Plug-Flow detention time= 21.0 min calculated for 0.807 af (99% of inflow)
Center-of-Mass det. time= 13.7 min (777.5 - 763.9)

Volume	Invert	Avail.Storage	Storage Description
#1	7.35'	1,478 cf	**Stone Envelope (Prismatic)** Listed below (Recalc) 6,500 cf Overall - 2,806 cf Embedded = 3,694 cf x 40.0% Voids
#2	7.60'	2,666 cf	**R-Tank Double Modules (Prismatic)** Listed below (Recalc) Inside #1 2,806 cf Overall x 95.0% Voids
		4,143 cf	Total Available Storage

Elevation (feet)	Surf.Area (sq-ft)	Inc.Store (cubic-feet)	Cum.Store (cubic-feet)
7.35	1,597	0	0
11.42	1,597	6,500	6,500

Elevation (feet)	Surf.Area (sq-ft)	Inc.Store (cubic-feet)	Cum.Store (cubic-feet)
7.60	1,293	0	0
9.77	1,293	2,806	2,806

Device	Routing	Invert	Outlet Devices
#1	Primary	7.60'	**21.0" Round Culvert to Filter** L= 4.0' CMP, projecting, no headwall, Ke= 0.900 Inlet / Outlet Invert= 7.60' / 7.60' S= 0.0000 '/' Cc= 0.900 n= 0.013 Corrugated PE, smooth interior, Flow Area= 2.41 sf

Primary OutFlow Max=8.76 cfs @ 12.14 hrs HW=9.57' (Free Discharge)
1=Culvert to Filter (Barrel Controls 8.76 cfs @ 4.04 fps)

Pond 4P: R-Tank 1

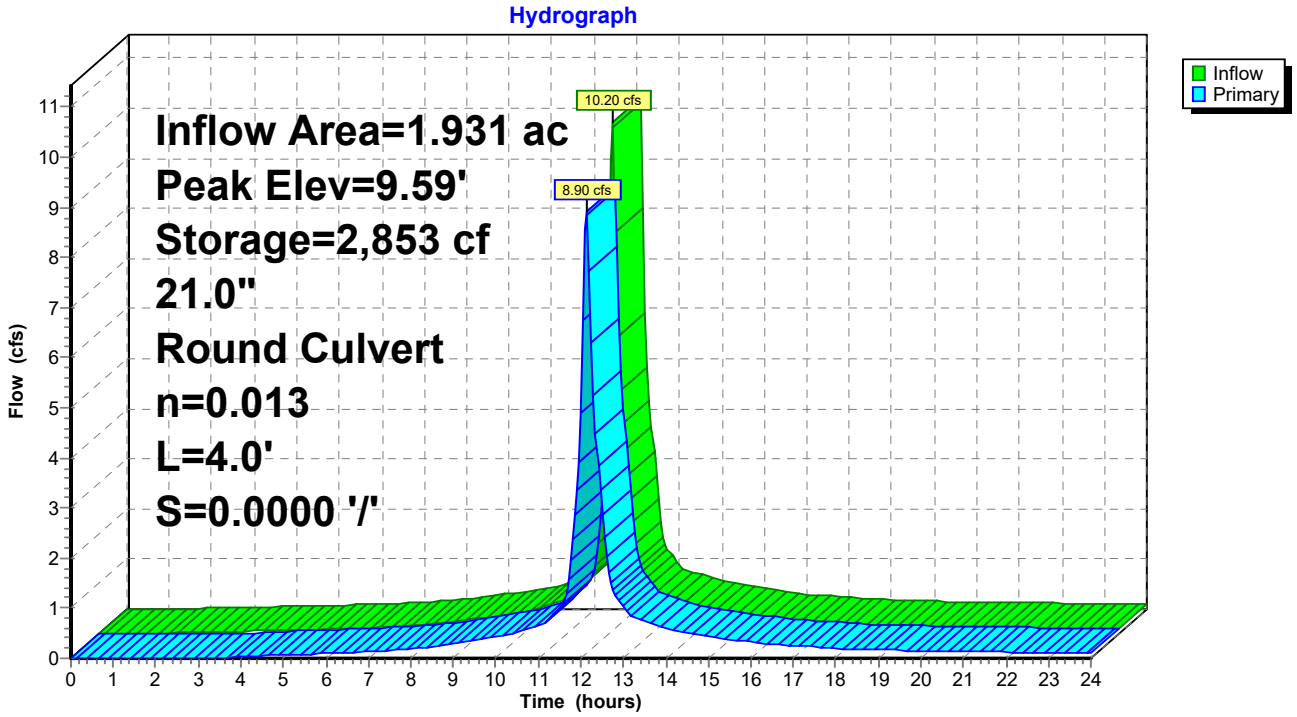

Summary for Pond 6P: CB27

Inflow Area = 2.619 ac, 99.91% Impervious, Inflow Depth > 5.56" for 25-Year Storm event
Inflow = 14.53 cfs @ 12.09 hrs, Volume= 1.213 af
Outflow = 14.53 cfs @ 12.09 hrs, Volume= 1.213 af, Atten= 0%, Lag= 0.0 min
Primary = 14.53 cfs @ 12.09 hrs, Volume= 1.213 af

Routing by Stor-Ind method, Time Span= 0.00-24.00 hrs, dt= 0.05 hrs
Peak Elev= 12.00' @ 12.09 hrs
Flood Elev= 14.57'

Device	Routing	Invert	Outlet Devices
#1	Primary	9.53'	**24.0" Round Culvert** L= 22.0' CPP, projecting, no headwall, Ke= 0.900 Inlet / Outlet Invert= 9.53' / 9.39' S= 0.0064 '/' Cc= 0.900 n= 0.013 Corrugated PE, smooth interior, Flow Area= 3.14 sf

Primary OutFlow Max=14.19 cfs @ 12.09 hrs HW=11.94' (Free Discharge)
1=Culvert (Inlet Controls 14.19 cfs @ 4.52 fps)

Pond 6P: CB27

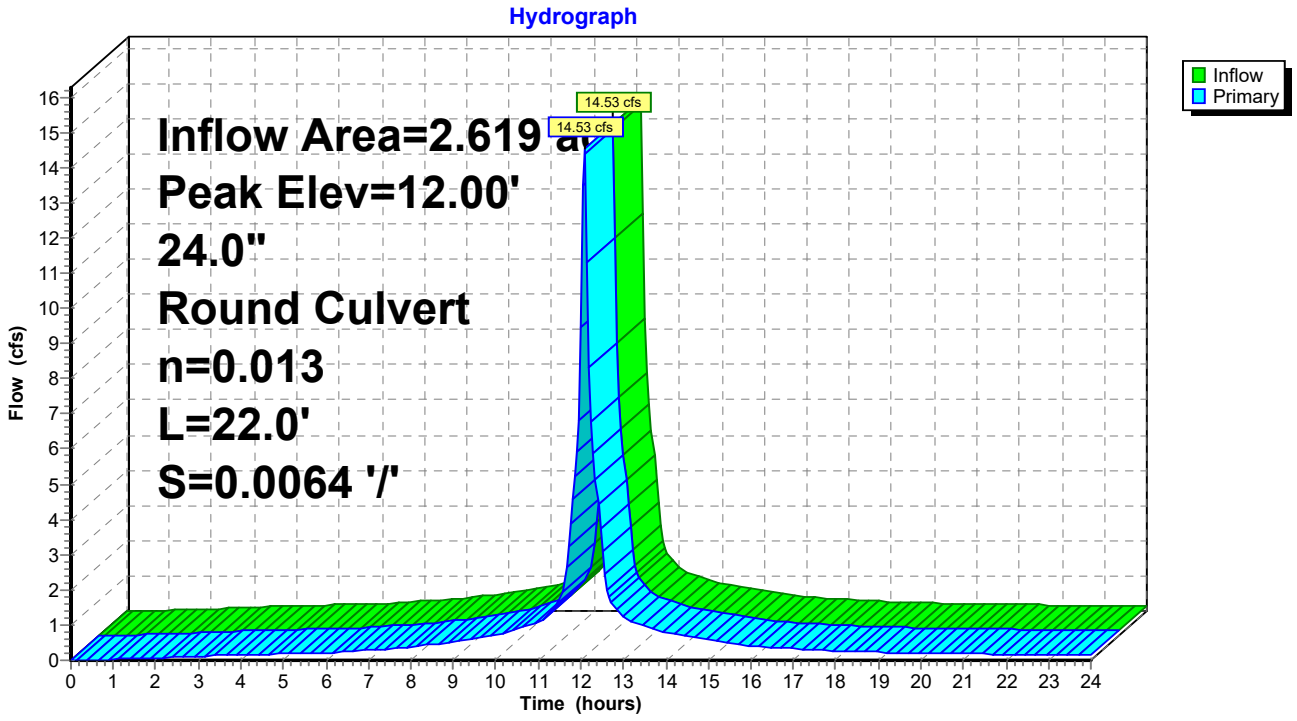

Summary for Pond 7P: Storm Structure

Inflow Area = 2.619 ac, 99.91% Impervious, Inflow Depth > 5.56" for 25-Year Storm event
Inflow = 14.53 cfs @ 12.09 hrs, Volume= 1.213 af
Outflow = 14.53 cfs @ 12.09 hrs, Volume= 1.213 af, Atten= 0%, Lag= 0.0 min
Primary = 14.53 cfs @ 12.09 hrs, Volume= 1.213 af

Routing by Stor-Ind method, Time Span= 0.00-24.00 hrs, dt= 0.05 hrs
Peak Elev= 11.13' @ 12.08 hrs
Flood Elev= 14.25'

Device	Routing	Invert	Outlet Devices
#1	Primary	9.39'	**15.0" Round Culvert X 3.00** L= 4.0' CPP, projecting, no headwall, Ke= 0.900 Inlet / Outlet Invert= 9.39' / 9.39' S= 0.0000 '/' Cc= 0.900 n= 0.013 Corrugated PE, smooth interior, Flow Area= 1.23 sf

Primary OutFlow Max=14.10 cfs @ 12.09 hrs HW=11.09' (Free Discharge)
1=Culvert (Barrel Controls 14.10 cfs @ 3.83 fps)

Pond 7P: Storm Structure

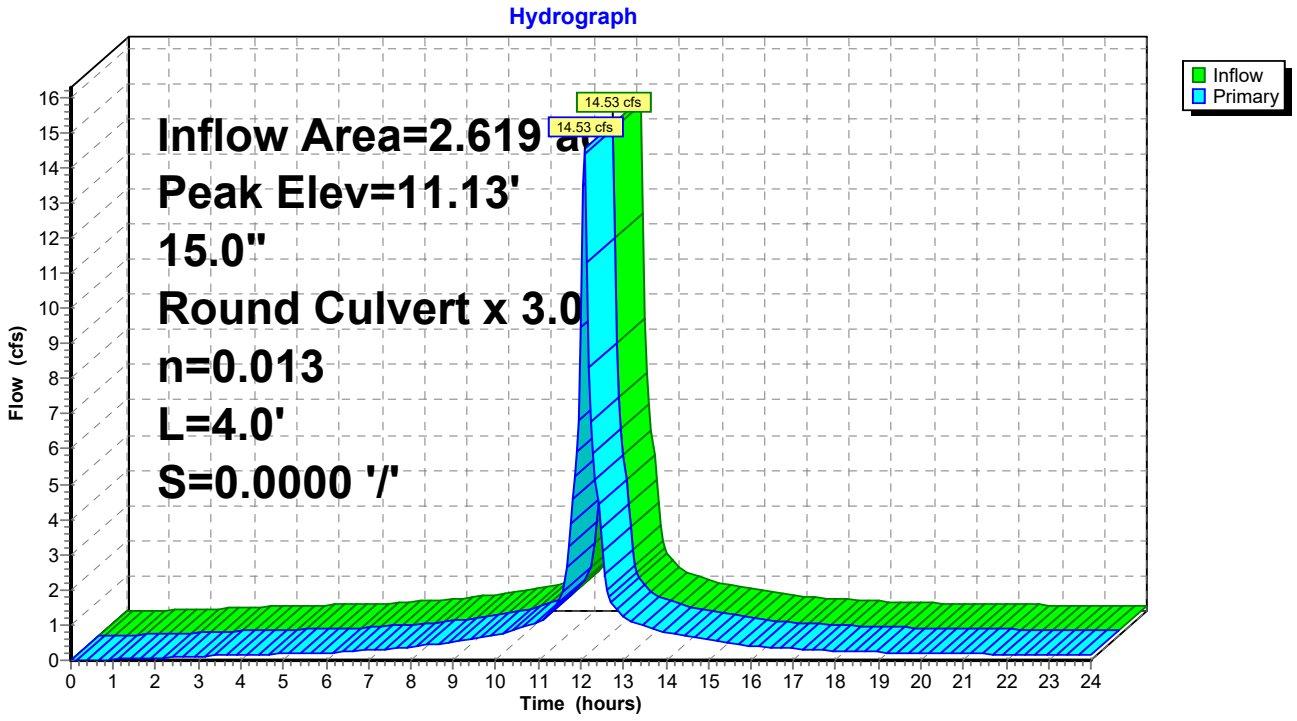

Summary for Pond 8P: R-Tank 2

Inflow Area = 2.619 ac, 99.91% Impervious, Inflow Depth > 5.56" for 25-Year Storm event
Inflow = 14.53 cfs @ 12.09 hrs, Volume= 1.213 af
Outflow = 11.56 cfs @ 12.15 hrs, Volume= 1.193 af, Atten= 20%, Lag= 4.0 min
Primary = 11.56 cfs @ 12.15 hrs, Volume= 1.193 af

Routing by Stor-Ind method, Time Span= 0.00-24.00 hrs, dt= 0.05 hrs
Peak Elev= 9.98' @ 12.15 hrs Surf.Area= 3,128 sf Storage= 6,202 cf
Flood Elev= 12.71' Surf.Area= 3,128 sf Storage= 8,290 cf

Plug-Flow detention time= 32.5 min calculated for 1.193 af (98% of inflow)
Center-of-Mass det. time= 21.6 min (766.9 - 745.2)

Volume	Invert	Avail.Storage	Storage Description
#1	7.57'	2,767 cf	**Stone Envelope (Prismatic)** Listed below (Recalc) 12,731 cf Overall - 5,813 cf Embedded = 6,918 cf x 40.0% Voids
#2	7.82'	5,523 cf	**R-Tank Double Modules (Prismatic)** Listed below (Recalc) Inside #1 5,813 cf Overall x 95.0% Voids
		8,290 cf	Total Available Storage

Elevation (feet)	Surf.Area (sq-ft)	Inc.Store (cubic-feet)	Cum.Store (cubic-feet)
7.57	3,128	0	0
11.64	3,128	12,731	12,731

Elevation (feet)	Surf.Area (sq-ft)	Inc.Store (cubic-feet)	Cum.Store (cubic-feet)
7.82	2,679	0	0
9.99	2,679	5,813	5,813

Device	Routing	Invert	Outlet Devices
#1	Primary	7.82'	**24.0" Round Culvert to Filter** L= 4.0' CMP, projecting, no headwall, Ke= 0.900 Inlet / Outlet Invert= 7.82' / 7.82' S= 0.0000 '/' Cc= 0.900 n= 0.013 Corrugated PE, smooth interior, Flow Area= 3.14 sf

Primary OutFlow Max=11.51 cfs @ 12.15 hrs HW=9.98' (Free Discharge)
1=Culvert to Filter (Barrel Controls 11.51 cfs @ 4.23 fps)

Pond 8P: R-Tank 2

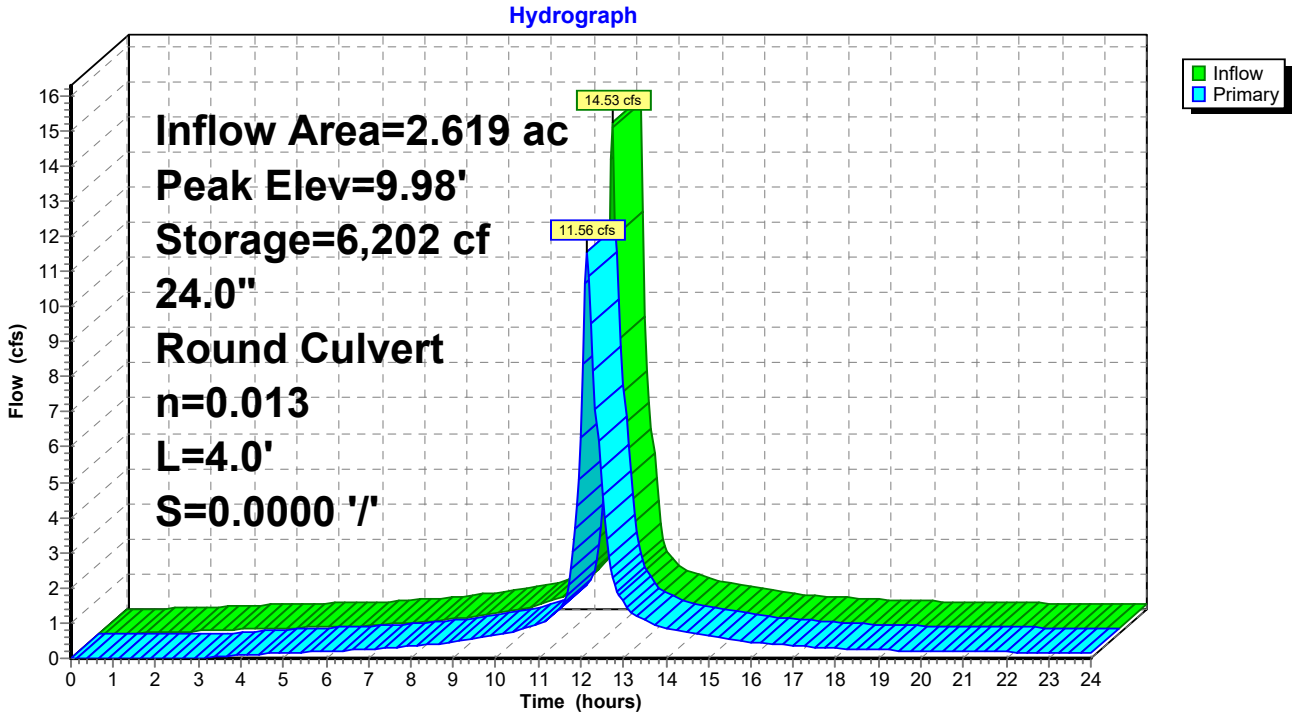

Summary for Pond 10P: DMH 5

Inflow Area = 4.550 ac, 96.78% Impervious, Inflow Depth > 5.27" for 25-Year Storm event
Inflow = 20.41 cfs @ 12.14 hrs, Volume= 2.000 af
Outflow = 20.41 cfs @ 12.14 hrs, Volume= 2.000 af, Atten= 0%, Lag= 0.0 min
Primary = 20.41 cfs @ 12.14 hrs, Volume= 2.000 af

Routing by Stor-Ind method, Time Span= 0.00-24.00 hrs, dt= 0.05 hrs
Peak Elev= 9.46' @ 12.15 hrs
Flood Elev= 13.56'

Device	Routing	Invert	Outlet Devices
#1	Primary	7.03'	**30.0" Round Culvert** L= 83.1' CPP, projecting, no headwall, Ke= 0.900 Inlet / Outlet Invert= 7.03' / 6.20' S= 0.0100 '/' Cc= 0.900 n= 0.013 Corrugated PE, smooth interior, Flow Area= 4.91 sf

Primary OutFlow Max=20.29 cfs @ 12.14 hrs HW=9.45' (Free Discharge)
1=Culvert (Inlet Controls 20.29 cfs @ 4.18 fps)

Pond 10P: DMH 5

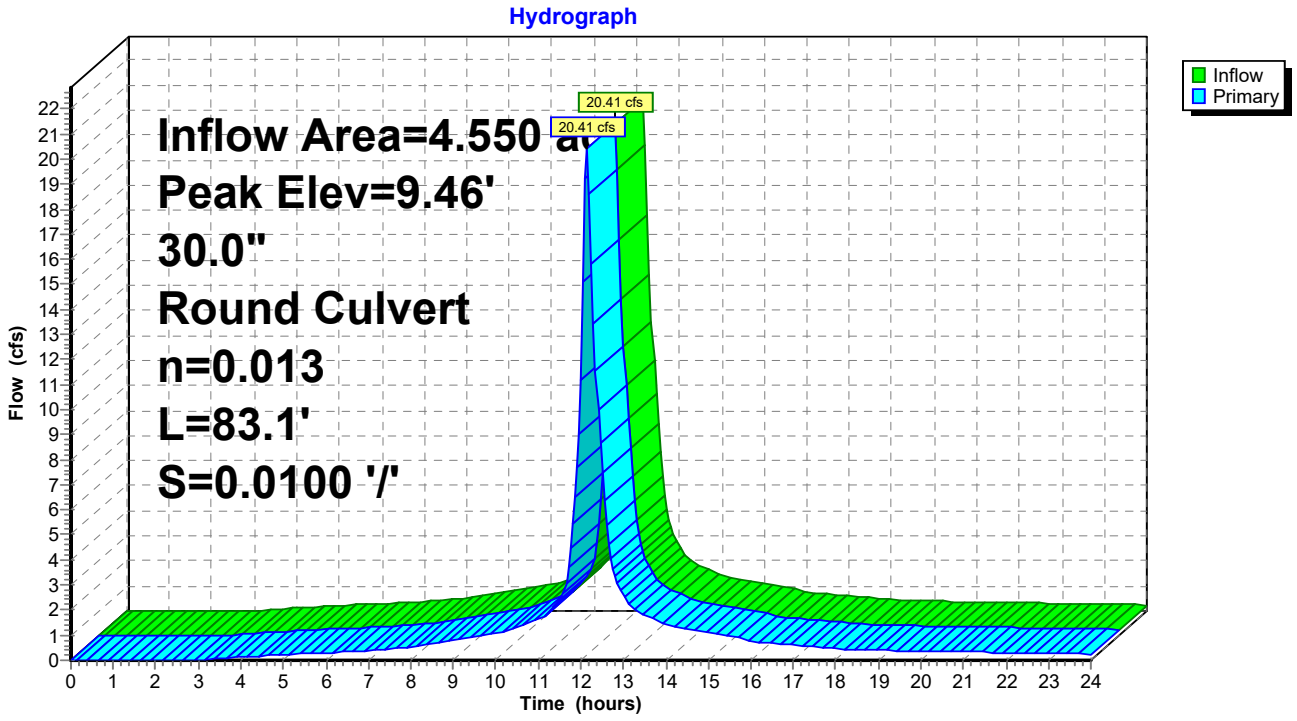

Summary for Pond 11P: Jellyfish 1 JFPD0806-4-2

Inflow Area = 1.931 ac, 92.54% Impervious, Inflow Depth > 5.01" for 25-Year Storm event
Inflow = 8.90 cfs @ 12.14 hrs, Volume= 0.807 af
Outflow = 8.90 cfs @ 12.14 hrs, Volume= 0.807 af, Atten= 0%, Lag= 0.0 min
Primary = 8.90 cfs @ 12.14 hrs, Volume= 0.807 af

Routing by Stor-Ind method, Time Span= 0.00-24.00 hrs, dt= 0.05 hrs
Peak Elev= 10.50' @ 12.14 hrs
Flood Elev= 14.79'

Device	Routing	Invert	Outlet Devices
#1	Primary	7.60'	**21.0" Round Filter Culvert Out** L= 90.0' CPP, projecting, no headwall, Ke= 0.900 Inlet / Outlet Invert= 7.60' / 7.13' S= 0.0052 '/' Cc= 0.900 n= 0.013 Corrugated PE, smooth interior, Flow Area= 2.41 sf
#2	Device 1	7.60'	**JF Filter-1 CSV File** Head (feet) 0.00 0.08 0.17 0.25 0.33 0.42 0.50 0.58 0.67 0.75 0.83 0.92 1.00 1.08 1.17 1.25 1.33 1.42 1.50 Disch. (cfs) 0.000 0.010 0.020 0.030 0.040 0.050 0.059 0.129 0.198 0.267 0.337 0.406 0.475 0.545 0.614 0.683 0.753 0.822 0.891
#3	Device 1	9.59'	**2.8' long x 0.5' breadth Broad-Crested Rectangular Weir** Head (feet) 0.20 0.40 0.60 0.80 1.00 Coef. (English) 2.80 2.92 3.08 3.30 3.32

Primary OutFlow Max=8.75 cfs @ 12.14 hrs HW=10.49' (Free Discharge)
└**1=Filter Culvert Out** (Passes 8.75 cfs of 12.97 cfs potential flow)
  ├**2=JF Filter-1 CSV File** (Custom Controls 0.89 cfs)
  └**3=Broad-Crested Rectangular Weir** (Weir Controls 7.86 cfs @ 3.13 fps)

Pond 11P: Jellyfish 1 JFPD0806-4-2

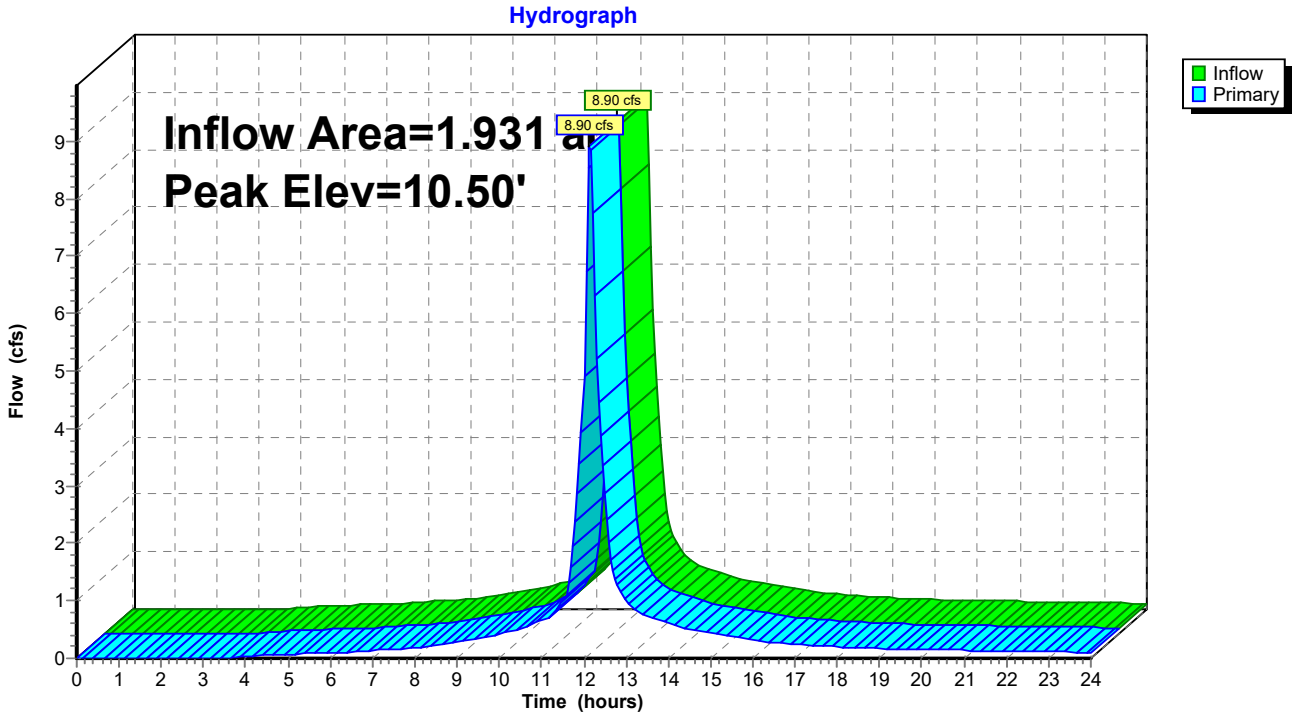

Summary for Pond 12P: Jellyfish 2 JFPD0806-7-2

Inflow Area = 2.619 ac, 99.91% Impervious, Inflow Depth > 5.47" for 25-Year Storm event
Inflow = 11.56 cfs @ 12.15 hrs, Volume= 1.193 af
Outflow = 11.56 cfs @ 12.15 hrs, Volume= 1.193 af, Atten= 0%, Lag= 0.0 min
Primary = 11.56 cfs @ 12.15 hrs, Volume= 1.193 af

Routing by Stor-Ind method, Time Span= 0.00-24.00 hrs, dt= 0.05 hrs
Peak Elev= 11.01' @ 12.15 hrs
Flood Elev= 12.70'

Device	Routing	Invert	Outlet Devices
#1	Primary	7.82'	**24.0" Round Filter Culvert Out** L= 114.0' CPP, projecting, no headwall, Ke= 0.900 Inlet / Outlet Invert= 7.82' / 7.13' S= 0.0061 '/' Cc= 0.900 n= 0.013 Corrugated PE, smooth interior, Flow Area= 3.14 sf
#2	Device 1	7.82'	**JF Filter-2 CSV File** Head (feet) 0.00 0.08 0.17 0.25 0.33 0.42 0.50 0.58 0.67 0.75 0.83 0.92 1.00 1.08 1.17 1.25 1.33 1.42 1.50 Disch. (cfs) 0.000 0.010 0.020 0.030 0.040 0.050 0.059 0.173 0.287 0.401 0.515 0.629 0.743 0.857 0.970 1.084 1.198 1.312 1.426
#3	Device 1	9.95'	**2.8' long x 0.5' breadth Broad-Crested Rectangular Weir** Head (feet) 0.20 0.40 0.60 0.80 1.00 Coef. (English) 2.80 2.92 3.08 3.30 3.32

Primary OutFlow Max=11.51 cfs @ 12.15 hrs HW=11.01' (Free Discharge)
└**1=Filter Culvert Out** (Passes 11.51 cfs of 17.66 cfs potential flow)
  ├**2=JF Filter-2 CSV File** (Custom Controls 1.43 cfs)
  └**3=Broad-Crested Rectangular Weir** (Weir Controls 10.09 cfs @ 3.41 fps)

Pond 12P: Jellyfish 2 JFPD0806-7-2

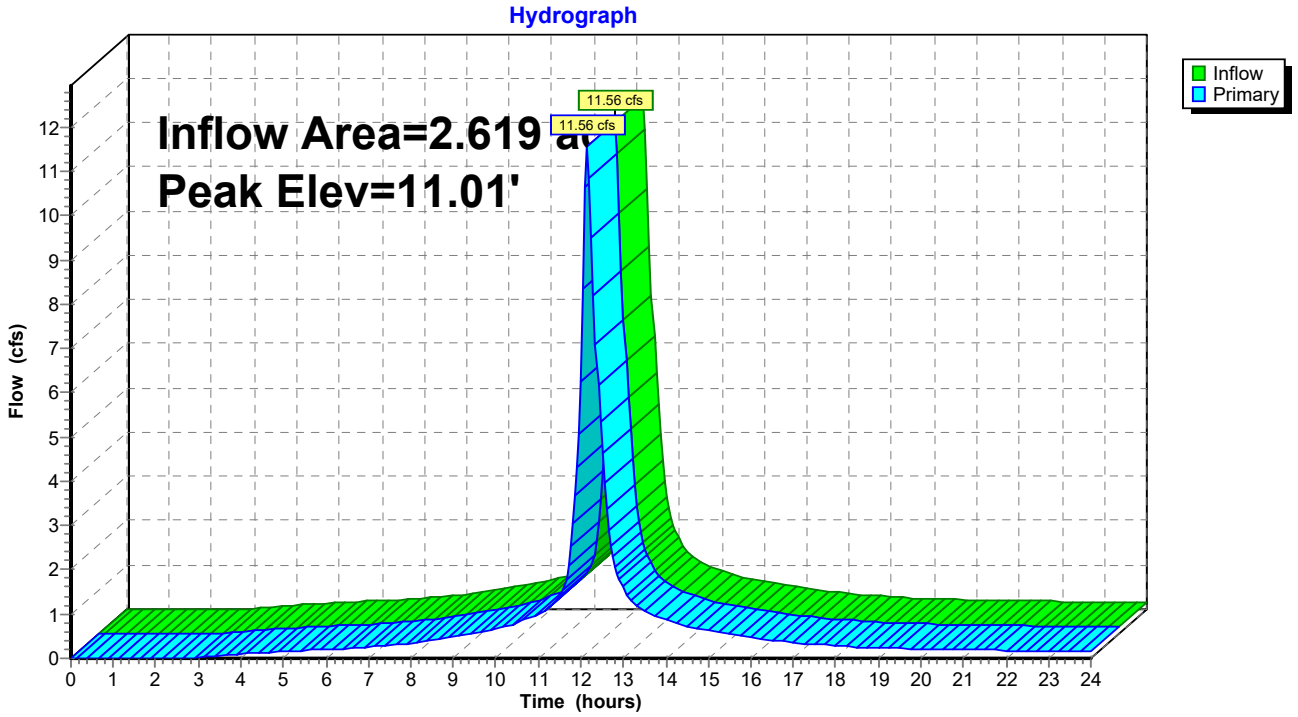

Summary for Link 1L: Fore Connector

Inflow Area = 1.013 ac, 56.83% Impervious, Inflow Depth > 3.06" for 25-Year Storm event
Inflow = 3.11 cfs @ 12.09 hrs, Volume= 0.258 af
Primary = 3.11 cfs @ 12.09 hrs, Volume= 0.258 af, Atten= 0%, Lag= 0.0 min

Primary outflow = Inflow, Time Span= 0.00-24.00 hrs, dt= 0.05 hrs

Link 1L: Fore Connector

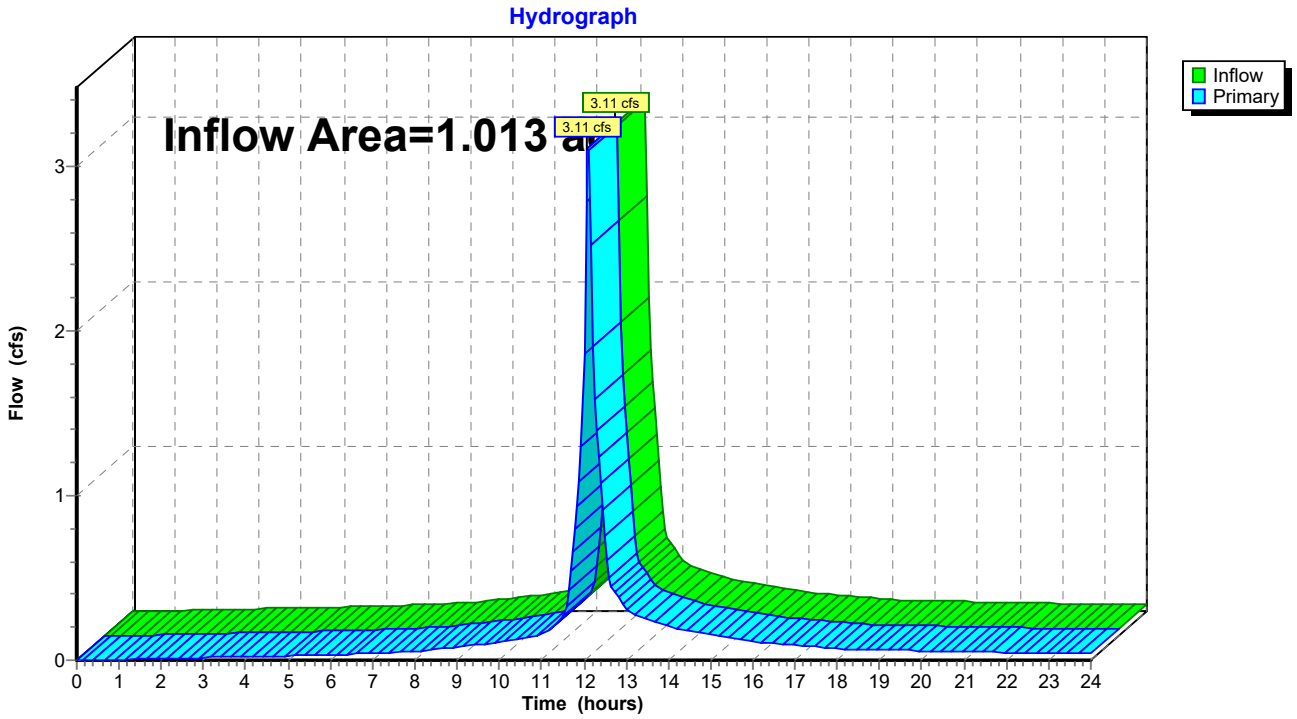

Summary for Link 2L: Fore River

Inflow Area = 6.884 ac, 89.32% Impervious, Inflow Depth > 4.81" for 25-Year Storm event
Inflow = 29.77 cfs @ 12.12 hrs, Volume= 2.762 af
Primary = 29.77 cfs @ 12.12 hrs, Volume= 2.762 af, Atten= 0%, Lag= 0.0 min

Primary outflow = Inflow, Time Span= 0.00-24.00 hrs, dt= 0.05 hrs

Link 2L: Fore River

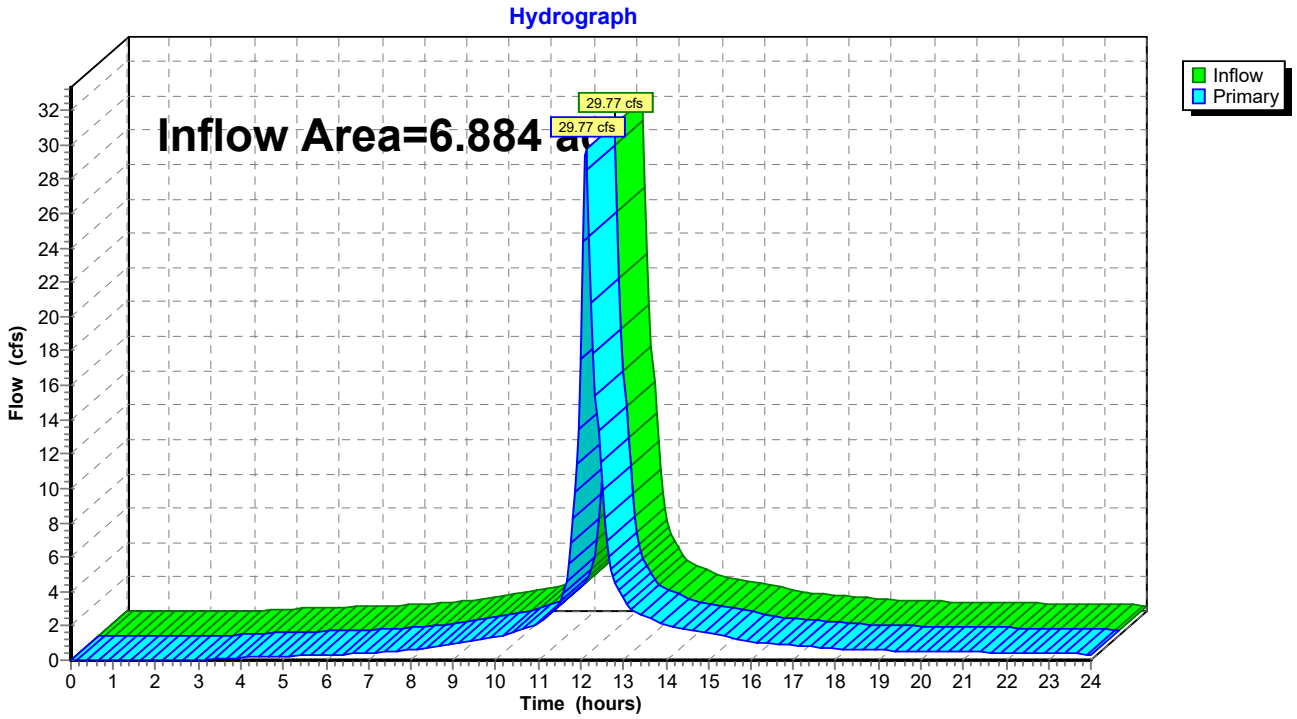

APPENDIX D: FIGURES

42x30 SHEET
1:1

FORE CONNECTOR

FORE STREET

THAMES STREET EXTENSION

REDEVELOPMENT AREA

BUILDING 1A
BUILDING 2
BUILDING 3
BUILDING 4
BUILDING 6
BUILDING 6B
BUILDING 12
BUILDING 14
BUILDING 15
BUILDING 16
BUILDING 24
TOWNHOUSES

SUBSURFACE R-TANK STORMWATER TREATMENT SYSTEM

SUBSURFACE R-TANK STORMWATER TREATMENT SYSTEM

SMH RIM=28.50
INV. IN=18.7
INV. OUT=18.6

SMH RIM=30.19
12" INV. IN=24.29
36" INV. IN=20.79
42" INV. OUT=20.69
RIM=29.52
12"-15" INV. OUT=23.72
RIM=29.39
INV. OUT=25.99

RIM=31.48
BOTTOM HOOD=26.18
6"PVC IN=28.28

SMH RIM=32.10
12" INV. IN=25.80
24" INV. OUT=23.10

SMH RIM=33.03
24" INV. IN=25.53
24" INV. OUT=25.33

RIM=35.05
6" INV. IN=32.05
12" INV. OUT=30.85

MH RIM=39.25
24" INV. IN=30.75
24" INV. OUT=30.65

SMH RIM=49.77
15" INV. IN=42.97
24" INV. IN=42.57
24" INV. OUT=41.77

RIM=54.26
8" OUT, H2O=50.26

RIM=54.15
UNABLE TO ACCESS

RIM=67.72
UNABLE TO OPEN

RIM=72.06
8" INV. OUT=67.16

SMH RIM=87.47
INV. IN=79.57
18" INV. IN=79.57
24" INV. OUT=79.27

RIM=89.04
8" INV. OUT=86.04

RIM=87.07
8" INV. OUT=83.57
HOOD

RIM=11.17

100 YEAR FLOOD LINE, ZONE V2 (EL +9') AS SCALED FROM FLOOD INSURANCE RATE MAP PANEL 230051 0014B DATED JULY 17, 1986

100 YEAR FLOOD LINE, ZONE A3 (EL 10) AS SCALED FROM FLOOD INSURANCE RATE MAP PANEL 230051 0014B DATED JULY 17, 1986

CITY FORCE MAIN SEWER LINE

BAR SCALE
1" = 30'
CHECK GRAPHIC SCALE BEFORE USING
30' 0 30' 60'

NOT FOR CONSTRUCTION

WOODARD & CURRAN
41 Hutchins Drive
Portland, Maine 04102
800.426.4262 | www.woodardcurran.com

COMMITMENT & INTEGRITY DRIVE RESULTS

THIS DOCUMENT IS THE PROPERTY OF WOODARD & CURRAN INC. AND HIS CLIENT. DISCLOSURE OR REPRODUCTION IN WHOLE OR IN PART WITHOUT THE EXPRESSED PERMISSION OF WOODARD & CURRAN INC. IS PROHIBITED.

REV	DESCRIPTION	DATE
	DESIGNED BY: LJS	
	DRAWN BY: BCM	
	CHECKED BY: DLC	
	DESCRIPTION	DATE
	1 SUBMISSION	12/20/19

REDEVELOPMENT FIGURE

PORTLAND FORESIDE DEVELOPMENT CO
PORTLAND, ME 04102

PHASE 1 SITE PLAN SUBMISSION

JOB NO.: 0227007
DATE: NOVEMBER 2019
SCALE: 1"=40'
SHEET: 1 OF 1

2

\\woodardcurran.net\shared\Projects\0227007.07 PRDC - 58 Fore Block 1\wip\Drawings\Phase 1 - Site Plan Submission\Stormwater Figures.dwg, Nov 13, 2019 - 7:23pm

42x30 SHEET
1:1

FORE STREET

FORE CONNECTOR

THAMES STREET EXTENSION

BUILDING 1A

BUILDING 2

BUILDING 3

BUILDING 4

BUILDING 6

BUILDING 15

BUILDING 24

TOWNHOUSES

1S 2S 3S 4S 5S 6Sa 6Sb 7S 8S 9S 10S 11S 12S 13S 14S 15S 16S 17S 18S 19S 20S 21S

1L 2L

1P 2P 3P 4P 5P 6P 7P 8P 9P 10P

SUBSURFACE STORMWATER TREATMENT SYSTEM

SMH RIM=28.50
INV. IN=18.7
INV. OUT=18.6

SMH RIM=30.19
12" INV. IN=24.29
36" INV. IN=20.79
42" INV. OUT=20.69

RIM=29.52
12"–15" INV. OUT=23.72

RIM=29.39
INV. OUT=25.99

RIM=31.48
BOTTOM HOOD=26.18
6"PVC IN=28.28

SMH RIM=32.10
12" INV. IN=25.80
24" INV. OUT=23.10

SMH RIM=33.03
24" INV. IN=25.53
24" INV. OUT=25.33

RIM=35.05
6" INV. IN=32.05
12" INV. OUT=30.85

MH RIM=39.25
24" INV. IN=30.75
24" INV. OUT=30.65

SMH RIM=49.77
15" INV. IN=42.97
24" INV. IN=42.57
24" INV. OUT=41.77

RIM=54.26
8" OUT, H2O=50.26

RIM=54.15
UNABLE TO ACCESS

RIM=67.72
UNABLE TO OPEN

RIM=72.06
8" INV. OUT=67.16

SMH RIM=87.47
INV. IN=79.57
18" INV. IN=79.57
24" INV. OUT=79.27

RIM=89.04
8" INV. OUT=86.04

RIM=87.07
8" INV. OUT=83.57
HOOD

100 YEAR FLOOD LINE, ZONE X2 (EL 10) AS SCALED FROM FLOOD INSURANCE RATE MAP PANEL 230051 00149 DATED JULY 17, 1986

100 YEAR FLOOD LINE, ZONE V2 (EL 13) AS SCALED FROM FLOOD INSURANCE RATE MAP PANEL 230051 00148 DATED JULY 17, 1986

STORMWATER LEGEND

- 1S — SUBCATCHMENT AREAS
- LIMIT OF DRAINAGE AREA
- SP1 — STUDY POINT
- xx — POND

BAR SCALE
1" = 40'
CHECK GRAPHIC SCALE BEFORE USING

NOT FOR CONSTRUCTION

WOODARD & CURRAN
41 Hutchins Drive
Portland, Maine 04102
800.426.4262 | www.woodardcurran.com

COMMITMENT & INTEGRITY DRIVE RESULTS

THIS DOCUMENT IS THE PROPERTY OF WOODARD & CURRAN INC. AND HIS CLIENT. ITS CONTENTS MAY NOT BE REPRODUCED OR DISCLOSED WITHOUT WRITTEN PERMISSION.

REV	DESCRIPTION	DATE
	DESIGNED BY: LJS	
	DRAWN BY: BDM	
	CHECKED BY: DLC	
	TOWNSITE 100B15.dwg	

DRAINAGE AREA FIGURE

PORTLAND FORESIDE DEVELOPMENT CO
PORTLAND, ME 04102

PHASE 1 SITE PLAN SUBMISSION

JOB NO.: 0227007
DATE: NOVEMBER 2019
SCALE: 1"=20'
SHEET: 1 OF 1

1

\\woodardcurran.net\shared\Projects\0227007.07 PFDC – 58 Fore Block 1\wip\Drawings\Phase 1 – Site Plan Submission\Stormwater Figures.dwg Nov 13, 2019 - 7:22am

GORRILL PALMER

707 Sable Oaks Drive, Suite 30
South Portland, Maine 04106
207.772.2515

Transportation Demand Management (TDM) Plan
Portland Foreside
Portland, Maine
JN 3138.03

Introduction

Portland Foreside Development Company LLC provides this Transportation Demand Management (TDM) Plan for the 58 Fore Street Portland Foreside site. The Master Development Plan was approved by the City of Portland and received a MaineDOT Traffic Movement Permit (TMP) from the City of Portland dated May 26, 2017. The TMP requires that as part of the Site Plan Review, a Transportation Demand Management (TDM) Plan be approved for each phase. This TDM Plan will be updated and expanded as additional phases undergo Site Plan Approval.

The Master Development Plan includes seven Blocks to be developed on the site. Site Plan permitting may be done to encompass an entire block or a portion of a block. The following table includes a summary of all permitting completed and in progress to date.

Portland Foreside Phases

Block	Project	Permit	Date
B7	Marina	Level II Site Plan	Permit Issued January 2019
Phase 1	Block 1A, 2, 4 and Building 12	Level III Site Plan	Permit Application November 2019 (current application)

Transportation Context

Portland Foreside is multi-phased development that began with the construction of a marina and will consist of a mix of phases that include retail (including restaurants), office, and residential space. The development is located within walking distance of several bus stops. The closest stops are approximately a 3-5 minute walk away and are located on METRO Route 1, Congress Street. A bus stop for METRO Route 8 is located approximately a 7-8 minute walk from the site. The site is also a 5 minute walk from the Ocean Gateway Pier and approximately a 10 minute walk from the Maine State Pier, which is the location of the Casco Bay Lines Ferry Terminal.

One of the many benefits of being located in the downtown area is that there is a complete network of sidewalks in the vicinity of the site, which encourages walking to and from the site.

Additionally, the Eastern Promenade Trail, which connects to a 70 mile pedestrian and bicycle trail network, runs through the site.

Portland Foreside Development Company's approach to minimizing vehicle-based traffic impacts on the City's roadway network started with a focus on integrating the site into Portland's existing urban fabric. The site serves as a seamless expansion of urban mixed uses along Portland's eastern waterfront. Starting with the rezoning and the use programming for the site that occurred in 2014 thru 2016, the project was developed in a way that will serve the needs of the existing neighborhoods, becoming an integrated element of those neighborhoods. This was the goal of the City's Eastern Waterfront Master Plan and Comprehensive Plan. The office users on the site and on the abutting office sites will visit the new markets, vendors, and restaurants. Many of the new residents on the site will work in the nearby offices both on and off of the site within an easy walking distance or bike ride from their home. The market will be a destination to the adjacent Munjoy Hill neighborhood. All of these scenarios, and many more, reflect shared-use and alternate mode of transportation scenarios which effectively reduce vehicle-based trips associated with the proposed uses when compared to single use or suburban development.

When companies look to move their offices to Portland's waterfront, their number one reason is focused on recruiting young professionals who they find are overwhelmingly attracted to the Company's urban setting. The majority of these individuals choose to live in a nearby, convenient urban setting, close to work and close to shops, restaurants and other amenities.

The adjacent Eastern Promenade Trail provides a primary point of connection to bicycle commuters and market visitors arriving from other areas both on and off peninsula in Portland, and from nearby communities. The City of Portland, in line with other urban areas of the country, has seen an increase in bicycle commuters. We anticipate that the abutting Eastern Promenade Trail and its associated Portland Trails network will serve as a strong conduit for promoting bicycle commuting opportunities for workers on the site, in addition to promoting biking and walking to the market and retail establishments on the site.

The market serves as a mixed-use destination on its own. Serving various prepared and packaged foods, the market is much more than a single stop for visitors. We anticipate that visitors can buy meats and produce, specialty goods, prepared foods and made to order foods at this location as part of a multi-vendor visit to the 58 Fore Street site. The nature of the retail in the market and on the site promotes extended visits, not high-turnover trips.

TDM Coordinator

The development will appoint a TDM Coordinator charged with administering and coordinating the TDM Plan. The TDM Coordinator will communicate with each of the tenant organizations in order to create an effective overall approach to the TDM goals. As more phases are developed, the TDM Coordinator will have increasing responsibilities with the additional site users. The TDM Coordinator has not yet been identified, but will be selected and the City will be notified prior to occupancy of the site.

The TDM Coordinator will be responsible for the following items:

- Coordinate and promote rideshare opportunities
- Coordinate and promote the use of the following alternatives to single occupant vehicle travel:
    - Providing METRO information to tenants
    - Providing Car Share service information to tenants
- Monitoring parking usage
- Monitoring bike rack usage and making recommendations as needed to accommodate demand
- Encouraging greater use of bicycling and walking
- Overseeing ongoing monitoring and updating of this TDM plan
- Creating and overseeing a committee representing each of the tenants in the development who will assist in TDM planning and assessment
- Administering and reviewing TDM surveys
- Filing annual TDM reports with the City

The TDM Coordinator will be the primary point of contact for the tenants regarding TDM. The Coordinator will help tenants develop strategies and incentives for employees and customers where applicable.

Trip and Parking Reduction Targets

In addition to the shared use reduction and other modes reduction that were applied to the trip generation and parking demand, an additional reduction of 5% is targeted for both trip generation and parking demand. The timeline for achieving this goal is 2-3 years after full occupancy of each phase. It should be noted that this reduction target will be reevaluated as each phase of development goes through the Site Plan Approval process.

Trip and Parking Reduction Strategies

The proposed trip and parking reductions strategies have been divided into three categories; infrastructure, incentives, and information. The following summarizes the proposed strategies for each category.

Infrastructure Strategies

Infrastructure strategies primarily include modifications and improvements to the accessibility of modes of transportation other than single occupant vehicles. The following summarizes the proposed infrastructure strategies for the site.

Public Transit Access

Pedestrian access to the closest METRO stops appear acceptable. One of the benefits of being located in a downtown area is the sidewalk network connecting all parts of the downtown area. The condition of the sidewalks in front of the site are consistent with other areas around the area; however, utility poles and sign posts are within the sidewalk width in several places. The project proposes to update the Fore Street streetscape, which includes updates to the sidewalks. The closest sheltered public transit facility is the Ocean Gateway. To increase METRO use, the development will discuss with METRO the potential for an additional bus stop at one of the site accesses.

Pedestrian and Bicycle Access

One of the many benefits of being located in the downtown area is that there is a complete network of sidewalks in the vicinity of the site, which could encourage walking to and from the site. Additionally, the Eastern Promenade Trail runs through the site, which could draw pedestrian and bicycle traffic to the site. It is a pedestrian and bicycle trail that connects to a 70-mile trail network. The TDM Coordinator will work to promote this trail and the on-site bicycle racks to increase the number of bicyclists. It is recommended that bicycle spaces be provided in key locations around the site and monitored by the TDM Coordinator, who will identify if additional bicycle spaces are warranted. If a strong bicycle use is identified, shower and locker facilities on-site to encourage further bicycle use will be considered in future development. With substantial bicycle facilities, the development can also consider a bicycle share program to encourage visitors or residents who do not own bicycles to use them as an alternative mode of transportation.

Shared Mobility

As mentioned above, if bicycle facilities are widely used by employees and visitors, a bikeshare program will be considered for the site. In addition to shared bicycles, a carshare program will also be considered. Maine is one of 20 states served by UhaulCarShare in the United States. In Portland, the service currently provides a total of eight vehicles, one of which is located at 30 Commercial Street, near its intersection with Franklin Street, and another at 115 Congress Street, near its intersection with St Lawrence Street. These vehicles are available on an hourly or daily basis. The development will consider the use of additional vehicles with a car rental agency on or near the site for visitors to use on an as-needed basis, especially when later phases are developed. This will allow for the use of a car for certain trips, which can aid in a traveler to or from the development to choose transit. Information will be provided to office workers and restaurant employees. Following the first survey, additions to the shared vehicles may be made if employees or visitors desire their use in significant numbers. A Car Share program may be an attractive option for local residents who are employed by one of the various tenants in the development.

Flexible Work Options

To reduce the number of employee trips to work during peak hours, employers may encourage telecommuting, flextime, or other flexible scheduling. Telecommuting allows employees to work from home, eliminating trips to the office. Both flextime and flexible scheduling allow employees to work hours convenient to their schedules and reduce the employee trips during the peak hours, by allowing employees to travel to or from work earlier or later in the day.

Incentives

Incentives may be used to encourage employees and visitors to reduce trip generation and parking demand. These incentives will be different for each tenant to cater to the various needs and desires of different site groups. The TDM Coordinator is responsible for aiding the employers in developing suitable incentives.

Employee Incentives

Employers may provide incentives for their employees to encourage them to use alternative modes of transportation. These incentives could include a "parking cash out" where employees receive monetary payments in lieu of provided parking, free or reduced public transit passes, preferred parking for car pool, or periodic prize drawings for employees using alternative modes of transportation.

Visitor Incentives

Visitor incentives would need to be coordinated by the TDM Coordinator and retail owner. The incentives could include participation in the METRO Bus and Buy program where the visitors pay the fare to get to the site, but get a free ride home with a purchase. Visitor incentives could also include coupons or discounts for using alternatives modes of transportation.

Information

The TDM Coordinator will maintain TDM kiosks or bulletin boards in the lobbies of the buildings to provide publicly available transit maps and schedules, information on bicycling routes, parking infrastructure, and walking infrastructure, and information on transportation provides and guaranteed ride home programs. Alternative modes of transportation information will be promoted, such as the advantages and cost-saving opportunities, as well as incentives offered by employers.

Monitoring and Reporting Plan

As part of the TDM Plan monitoring program, the TDM Coordinator will be responsible for overseeing the assessment of the TDM Plan use of its various operational components. The monitoring will be through the surveys, direct observation, and interaction with employees, residents, and visitors. The following summarizes the components of the monitoring and reporting plan.

Employee Surveys

Six months after initial occupancy of each phase and annually thereafter, the on-site employees will be surveyed regarding their transportation choices such as automobile / bicycle / motorcycle-scooter ownership, parking demand, and the frequency of trips using bicycling, walking, Car Share, carpool/vanpool, and the bus. The survey may be updated periodically by the TDM Coordinator. The surveys will be conducted to determine:

- Mode of travel to and from work (car/carpool/biking/walking/bus)
- Preferences or concerns with the mode of travel
- The flexibility and receptivity of employees to utilizing various travel modes (and to ascertain whether individual employees make use of multiple modes during the course of a given year or season)

Various questions will be created in the survey to determine which measures to encourage increased use of transit are most effective. The TDM Coordinator may seek to partner with the

public sector and use public funding to increase the effectiveness of these surveys and obtain the information contained in them.

Visitor Surveys

For visitors to the site, surveys will also be included. These can be provided with meal receipts at the restaurant or via website codes on menus. The surveys will be conducted to gather the following information:

- Mode of travel to and from the hotel, restaurant, or retail center (car/carpool/biking/ walking/bus)
- Preferences or concerns with mode of travel
- Barriers to using alternative modes of transportation
- The flexibility and receptivity of visitors to utilizing various travel modes to access the site

All visitor surveys will need to be simple and convenient; they could be accessed with a link online or a QR code on receipts or fliers posted on the site that could be scanned with a smartphone. Various questions will be created in the survey to determine measures to encourage increased use of transit, for example, either via costs for parking or greater promotion of transit uses. The TDM Coordinator will work with the tenants at the Micro TDM level to determine what kinds of incentives could elicit consistent and engaged participation in these surveys.

Reporting

The monitoring will be on-going and will result in updates to the TDM Plan to be submitted to the City's TDM Manger for review and an annual summary report to the City. The TDM Coordinator will need to discuss future options as they become available with the City and GO Maine, an organization charged with finding transportation options for the state, and consider them for use on the site.

GORRILL PALMER

707 Sable Oaks Drive, Suite 30
South Portland, Maine 04106
207.772.2515

Traffic Assessment
Portland Foreside – Combined Blocks 1, 2, 4, and Building 12
Portland, Maine
JN 3138.03

Date: November 13, 2019
Subject: Portland Foreside Combined Blocks Traffic Assessment
Portland, Maine
To: Lauren Swett PE, Woodard & Curran
From: Randy Dunton / Emily Leighton, Gorrill Palmer

Introduction

Gorrill Palmer (GP) has been retained by Woodard & Curran to complete a traffic assessment for the proposed Blocks 1, 2, 4, and Building 12 of the 58 Fore Street Master Development Plan. The combined blocks are proposed to consist of the following:

- Block 1:
  - 95,100 sf of office space
  - 9,300 sf of specialty retail
- Building 12
  - 3,200 sf restaurant
  - 3,200 sf office
  - 3,200 sf residential (2 units)
- Block 2:
  - 17,950 sf restaurant
  - 17,950 sf specialty retail
  - 17,900 sf of event center
  - 12,400 sf office
- Block 4:
  - 1,100 sf retail
  - 12,900 sf residential (12 units)

The 58 Fore Master Development Plan received a Traffic Movement Permit (TMP #2016-224) from the City of Portland dated May 26, 2017. The TMP requires, as a condition of approval, that as part of the Site Plan Review by the Planning Board, updated traffic analyses be approved for each phase of development. The following summarizes the updated traffic analysis for the combined Blocks 1, 2, 4, and Building 12.

Trip Generation

The trip generation for the proposed combined Blocks of the Portland Foreside Master Development Plan has been calculated to ensure that it is less than the trip generation approved in the overall site TMP. The Master Development Plan was permitted for 506 trip ends during the AM peak hour of the adjacent street and 585 trip ends during the PM peak hour of the adjacent street. The following summarizes the trip generation calculations for the combined blocks of 1, 2, 4 and building 12 and the comparison to the total site approved TMP trip generation.

ITE Trip Generation

The trip generation for the combined blocks has been calculated using the Institute of Transportation Engineers (ITE) publication, *Trip Generation*, Seventh Edition. Although there are more recent editions of ITE available, the Seventh Edition is the most recent edition that has been accepted by MaineDOT for use in TMPs. The exception to this is General Office, where the MaineDOT accepts the Eighth Edition. The City of Portland has delegated review authority for TMPs, but they are still required to be in accordance with MaineDOT rules. This methodology is consistent with that used for calculating the trip generation for the approved TMP. The trip generation for the combined blocks has been calculated using the following Land Use Codes (LUCs):

- LUC 710 – General Office
- LUC 931 – Quality Restaurant
- LUC 220 – Apartment
- LUC 814 – Specialty Retail

The following table summarizes the ITE trip generation for the site. Detailed trip generation calculations are attached. It should be noted that due to the types of restaurants proposed and that they are expected to be destinations that would draw visitors for at least an hour, they are assumed to operate similarly to quality restaurants. Additionally, the event space that is proposed is smaller than the existing event space on site. No credit was taken in the original TMP for the event space. Since the proposed event space is smaller than the existing event space and the uses will be similar, no increase in trips is expected. Therefore, the trip generation for the event space has not been included.

ITE Trip Generation Summary

Use	Size	AM Adj St	PM Adj St
Block 1			
Office	95,100 sf	180	173
Retail	9,300 sf	7	25
Subtotal		187	198
Block 2			
Restaurant	17,950 sf	15	134
Retail	17,950 sf	13	49
Office	12,400 sf	35	34
Subtotal		63	217
Block 4			
Retail	1,100 sf	1	3
Residential	12 units	6	7
Subtotal		7	10
Building 12			
Office	3,200 sf	12	12
Restaurant	3,200 sf	3	24
Residential	2 units	1	1
Subtotal		16	37
Total		**273**	**462**

As shown in the table, the ITE trip generation is forecast to be 273 trip ends during the AM peak hour of the adjacent street and 462 trip ends during the PM peak hour of the adjacent street. A trip end is a trip into or out of the site, thus a round trip is equal to two trip ends.

Shared Use Reduction

The National Cooperative Highway Research Program (NCHRP) 684 Internal Capture Estimation Tool has been used to estimate the traffic that will visit more than one destination without leaving the site. The NCHRP 684 spreadsheet uses the ITE forecast trip generation for each type of land use (office, retail, residential, and hotel) and estimates the trips that will travel between two uses without leaving the site. This yields an internal trip capture percentage, which is the percentage of trip ends that will travel between two uses. This methodology is consistent with that used for the TMP. It should be noted that the residential units were not included in this reduction due to the very low trip generation. The following table summarizes the AM and PM peak hour internal trip capture percentages for the proposed site.

AM Peak Hour Adjacent Street NCHRP 684 Internal Trip Capture

Land Use	ITE Trip Generation		Internal Capture %		Internal Capture Trip Ends		
	Enter	Exit	Enter	Exit	Enter	Exit	Total
Office	205	22	2%	27%	4	6	10
Retail	13	8	38%	38%	5	3	8
Restaurant	10	8	40%	38%	4	3	7
Residential	1	6	0%	17%	0	1	1
Total	**229**	**44**	**6%**	**30%**	**13**	**13**	**26**

*These values are taken directly from the NCHRP spreadsheets (Attachment 1C), which may not match exact calculations due to rounding in the spreadsheet.

PM Peak Hour Adjacent Street NCHRP 684 Internal Trip Capture

Land Use	ITE Trip Generation		Internal Capture %		Internal Capture Trip Ends		
	Enter	Exit	Enter	Exit	Enter	Exit	Total
Office	33	186	9%	3%	3	5	8
Retail	34	43	62%	37%	21	16	37
Restaurant	103	55	14%	36%	14	20	34
Residential	6	2	67%	50%	4	1	5
Total	**276**	**286**	**24%**	**15%**	**42**	**42**	**84**

*These values are taken directly from the NCHRP spreadsheets (Attachment 1C), which may not match exact calculations due to rounding in the spreadsheet.

The NCHRP 684 spreadsheet does not have information for the Saturday peak hour of the generator. To estimate a reduction for a Saturday, the AM and PM trip capture percentages were averaged and applied to the Saturday peak hour of the generator. This resulted in a Saturday internal trip capture of approximately 5% of total trips which results in a reduction of 4 trip ends (2 entering and 2 exiting).

The following table summarizes the reduced trip generation for the proposed site due to shared use trips:

Shared Use Reduced Trip Generation Summary

Building Use	Trip Generation	
	AM Adj St	PM Adj St
ITE Total	273	462
Shared Use Reduction	-26	-84
Reduced Subtotal	**247**	**378**

As shown in the table, the proposed site with the shared use reduction is forecast to generate 247 trip ends and 378 trip ends during the AM and PM peak hours of the adjacent street respectively.

Other Modes Reduction

In addition to a shared use reduction, a reduction for other modes of transportation can be applied to the trip generation. It can be expected for a site in a downtown area that other modes of transportation will be used to go to and from the site. These other modes could include things such as transit, bicycle, carpooling, or walking. This site is adjacent to an existing bus route, as well as located on a pedestrian and bicycle path, so full use of other modes of transportation are readily available. The other modes reduction that was calculated for the TMP application for non-residential uses has been applied to the trip generation with the shared use reduction. The reduction of 18% was calculated based on the 2010 CTPP data for Tract 3, where the site is located. This reduction was approved by the City during the TMP process. An other modes reduction for residential uses was also applied in the TMP application, however, due to the very low residential trip generation in the combined blocks it was not applied. The following table summarizes the trip generation including the other modes reduction:

Other Modes Reduced Trip Generation Summary

Building Use	Trip Generation	
	AM Adj St	PM Adj St
Reduced Subtotal	247	378
Other Modes Reduction	-44	-68
Reduced Site Total	**203**	**310**

As shown in the table, the reduced site trip generation for Blocks 1, 2, 4 and 12 is 203 trip ends during the AM peak hour of the adjacent street and 310 trip ends during the PM peak hour of the adjacent street.

Master Plan Trip Generation Comparison

The trip generation for the combined Blocks 1, 2, 4 and 12 has been compared to the permitted trip generation to ensure that it does not exceed the permitted amount. The site was permitted for 506 trip ends during the AM peak hour of the adjacent street and 585 trip ends during the PM peak hour of the adjacent street. The following table summarizes the trip generation comparison:

Trip Generation Comparison Summary

Trip Generation	Trip Generation	
	AM Adj St	PM Adj St
Permitted	506	585
Forecast Combined Blocks	203	310
Remaining Permitted Trips	**303**	**275**

As shown in the table, the combined blocks trip generation is 303 trip ends and 275 trip ends **less** than the permitted site trip generation during the AM and PM peak hours of the adjacent street. Therefore, no TMP modification is needed.

It should be noted that the methodology used to arrive at this trip generation will need to be generated every time new development is proposed, because the results are dependent on the overall total uses on the site and the mixture of those uses. The results would be inaccurate to simply calculate the trip generation of new uses and subtract from the 303 & 275 trips identified above.

Parking Demand

The forecast parking demand for the combined blocks has been based on a combination of City Ordinance parking demand, the ITE Parking Generation Manual, 4th Edition, and published data / engineering judgement. Additionally, the shared use and other modes reductions that were applied to the trip generation were also applied to the parking demand calculations. This is the same methodology as that approved by the City during the Master Development Plan approval. Shared parking methodology reflects that the demand for different uses will peak during different times of day; however, when parking spaces are designated for a single use, they cannot be used to satisfy shared parking demand.

It has been assumed that the combined blocks will all utilize the parking garage on Block 4 and that no parking spaces are designated for a specific use. Since no parking spaces are designated for a single use, the shared parking demand methodology is applicable.

Based on the methodology described above, the peak parking demand for the combined blocks is forecast to be 159 spaces and is forecast to occur from 11:00 AM to 12:00 PM. It should be noted that a parking facility can be considered full when it is approximately 85% occupied. This is because a driver may not see empty parking spaces when the lot is almost completely occupied, especially in a larger parking area. To ensure the parking demand is met, the recommended number of parking spaces is 187 spaces.

Bicycle Parking

Per City Ordinance, new uses are required to provide bicycle accommodations based on the type of use. Residential structures are required to provide 2 bicycle spaces for every 5 dwelling units. Non-residential structures are required to provide 2 bicycle parking spaces for every 10 vehicle parking spaces for the first 100 required spaces, plus one bicycle parking space for every 20 required vehicle parking spaces over the 100 vehicle parking spaces. The following table shows the required bicycle parking for the Ordinance vehicle parking demand and the Shared Parking demand:

Bicycle Parking Summary

Use	Bicycle parking Demand
Parking Variables	183 Non-Residential Spaces, 14 Units
Residential Bicycle Spaces	6
Non-Residential Bicycle Spaces	25
Total	**31**

As shown in the table, the site will require 31 bicycle parking spaces to meet the City Ordinance Requirements for bicycle accommodations. It should be noted that the actual bicycle demand use is expected to be less than that identified above, since the peak of the non-residential bicycle demand occurs when residential demand is lowest.

Event Center Trip Generation

Although the event space is not forecast to draw additional traffic to the site from the existing or recent past use, the event traffic is still anticipated to utilize the parking garage. To include the impact of the event center, the trip generation for the forecast occupancy has been estimated. Based on information provided by Woodard & Curran, the future occupancy (without booths) is anticipated to be 988 people. ITE does not have any applicable LUCs for this type of use, so to calculate the trip generation the following assumptions were made:

- Events do not start early enough to generate significant AM peak hour traffic
- 80% of visitors arrive during the PM peak hour of the adjacent street and leave after the PM peak hour of the adjacent street
- The average vehicle occupancy is 2.5 people per vehicle

Based on these assumptions, the event space is forecast to generate 316 trip ends during the PM peak hour of the adjacent street. These have been assigned to the site driveways with the estimation that approximately 60% of the traffic will use the garage access on Fore Street.

Driveway Evaluation

The proposed parking garage access on Fore Street is intended to accommodate the majority of the site traffic. There are other accesses to the site such as Thames Street extension. Since the trip generation is less than permitted, the focus of the evaluation is on the garage driveway onto Fore Street. An evaluation has been completed for the proposed driveway to determine if mitigation will be required. The trip assignment for the proposed Fore Street parking garage access is shown on the attached Figure 3 and is forecast to be approximately 60% of the site generated traffic.

Capacity Analysis

GP completed a capacity analysis for the proposed site driveway using Synchro/SimTraffic computer analysis software. Level of service rankings are similar to the academic ranking system where an 'A' is good with little control delay and an 'F' represents poor traffic conditions. If the level of service falls below a 'D', an evaluation should be made to determine if mitigation is warranted. The following tables summarize the relationship between control delay per vehicle and level of service:

Level of Service Criteria for Unsignalized Intersections

Level of Service	Control Delay per Vehicle (s)
A	Less than 10.0
B	10.1 to 15.0
C	15.1 to 25.0
D	25.1 to 35.0
E	35.1 to 50.0
F	Greater than 50.0

The capacity and queue analysis results have been based on the average of five SimTraffic runs and using the 2027 Postdevelopment Design Hour Volumes (DHV). These volumes are the same as those used in the Traffic Impact Study completed in 2016 for the Master Plan. Additionally, the analysis assumes separate left and right turn lanes exiting the garage. A separate analysis was completed to determine if a single exit lane from the garage would have any effect on the LOS and it did not, the LOS remained the same. A brief lane warrant analysis was completed for Fore Street and neither a left or right turn lane was warranted, so Fore Street has been modeled as a single lane. The following tables summarize the capacity analysis results for the intersection. The detailed analyses are attached.

Capacity Analysis Results Summary

Approach	Level of Service	
	AM Peak Hour	PM Peak Hour
Driveway NW	A	B
Fore Street NE	A	A
Fore Street SW	A	A

As shown in the table, the proposed garage access is forecast to operate at acceptable levels of service during both peak hours.

Queues

The proposed exit is forecast to have an AM 95th percentile queue of approximately 40 feet and a PM 95th percentile queue of approximately 95 feet. These are with a single exit lane. If there are two exit lanes, this would be reduced. The parking exit and garage design should ensure this queue can be accommodated without significantly effecting operations at the exit.

Sight distance

As identified in the original master plan, sight distance exiting the garage is dependent on on-street parking. We recommend that the City revisit their parking zones to potentially address any restrictions to sight distance.

Conclusions

The following is a summary of the conclusions:

1. The trip generation for the combined blocks is forecast to be 203 trip ends during the AM peak hour of the adjacent street and 310 trip ends during the PM peak hour of the adjacent street. This level of trip generation is 303 trip ends less than the permitted trip generation during the AM peak hour of the adjacent street and 275 trip ends less than the permitted trip generation during the PM peak hour of the adjacent street. Therefore, no TMP modification is needed. We recommend counting the multi-purpose facility once it is operational and comparing the trip generation to that provided herein.

2. The peak parking demand for the site is forecast to be 159 spaces, and it is forecast to occur from 11:00 AM to 12:00 PM. To accommodate vehicles when the parking garage is near full, the recommended number of parking spaces is 187 spaces. This methodology assumes that no parking spaces are dedicated to a specific use.

3. The combined blocks are required to provide 31 bicycle parking spaces, based on the non-residential vehicle spaces and the residential units.

4. We recommend the multi-purpose use be monitored to ensure parking is available during its use.

5. The site driveway is forecast to operate at acceptable levels of service during the AM and PM peak hours in 2027, provided adequate queue is provided on the site driveway.

6. On-street parking on Fore Street at the site driveway across from Waterville Street should be evaluated by the City and parking spaces removed if they effect sight distance.

JN: 3138.03
Project Description: Portland Foreside
Project Location: Portland, Maine
Date: 11/11/2019
Calculated By: EAL

Gorrill Palmer Consulting Engineers
707 Sable Oaks Drive
South Portland, ME 04106

General Office Building
Land Use Code (LUC) 710

Square Feet 95,100

Trip Ends Based on Fitted Curve Equation

Time Period	ITE Trip Rate	Trip Ends	Number of Studies	Directional Split *		Directional Distribution		R^2
				IN	OUT	IN	OUT	
Weekday	Ln (T) = 0.77 Ln (X) + 3.65	1283	78	50%	50%	642	641	0.80
AM Peak Hour	**Ln (T) = 0.80 Ln (X) + 1.55**	**180**	**217**	**90%**	**10%**	**162**	**18**	**0.83**
PM Peak Hour	**T = 1.12 (X) + 78.81**	**185**	**235**	**15%**	**85%**	**28**	**157**	**0.82**
Saturday	T = 2.14 (X) + 18.47	222	17	50%	50%	111	111	0.66
Peak Hour of Generator	Ln (T) = 0.81 Ln (X) - 0.12	35	10	55%	45%	19	16	0.59

* Percentages rounded to nearest 5%

Trip Ends Based on Average Rate

Time Period	ITE Trip Rate	Trip Ends	Number of Studies	Directional Split *		Directional Distribution		R^2
				IN	OUT	IN	OUT	
Weekday	T = 11.01 (X)	1047	78	50%	50%	524	523	---
AM Peak Hour	T = 1.55 (X)	147	217	90%	10%	132	15	---
PM Peak Hour	T = 1.49 (X)	142	235	15%	85%	21	121	---
Saturday	T = 2.37 (X)	225	17	50%	50%	113	112	---
Saturday Peak Hour of Gen.	**T = 0.41 (X)**	**39**	**10**	**50%**	**50%**	**20**	**19**	**---**

* Percentages rounded to nearest 5%

PM Peak Hour:	T = 1.49/1.55 (AM Peak)	173		15%	85%	26	147	0.82

JN: 3138.03
Project Description: Portland Foreside
Project Location: Portland, Maine
Date: 11/11/2019
Calculated By: EAL
Checked By:

Gorrill Palmer Consulting Engineers
707 Sable Oaks Drive
Suite 30
South Portland, Maine 04106

Specialty Retail Center- (7th Edition)
Land Use Code (LUC) 814

Gross Floor Area (ft^2): 9,300

Average Rate

Time Period	ITE Trip Rate	Trip Ends	Number of Studies	Directional Split * IN	Directional Split * OUT	Directional Distribution IN	Directional Distribution OUT	R^2
Weekday	T = 44.32 (X)	412	4	50%	50%	206	206	---
Peak Hour of Adjacent Street Traffic 7-9 AM**	---	---	---	---	---	---	---	---
Peak Hour of Adjacent Street Traffic 4-6 PM	**T = 2.71 (X)**	**25**	**5**	**45%**	**55%**	**11**	**14**	**---**
AM Peak Hour of Generator	**T = 6.84 (X)**	**64**	**4**	**50%**	**50%**	**32**	**32**	**---**
PM Peak Hour of Generator	**T = 5.02 (X)**	**47**	**3**	**55%**	**45%**	**26**	**21**	**---**
Saturday	T = 42.04 (X)	391	3	50%	50%	196	195	---
Saturday Peak Hour of Gen.***	---	---	---	---	---	---	---	---
AM Peak of Adjacent Street 7-9 AM**	**T = 0.275 (PM Peak Hour)**	**7**		**60%**	**40%**	**4**	**3**	
Saturday Peak Hour***	**T = 1.325 (PM Peak Hour)**	**33**		**50%**	**50%**	**17**	**16**	

**Based on ratio of AM/PM traffic for LUC 820, Shopping Center
***Saturday Peak Hour comes from a ratio of PM to Saturday trip rates from LUC 820 - Shopping Center
* Percentages rounded to nearest 5%

Fitted Curve Equation

Time Period	ITE Trip Rate	Trip Ends	Number of Studies	Directional Split * IN	Directional Split * OUT	Directional Distribution IN	Directional Distribution OUT	R^2
Weekday	T = 42.78 (X) + 37.66	436	4	50%	50%	218	218	0.69
Peak Hour of Adjacent Street Traffic 7-9 AM	---	---	---	---	---	---	---	---
Peak Hour of Adjacent Street Traffic 4-6 PM	T = 2.40 (X) + 21.48	44	5	45%	55%	20	24	0.98
AM Peak Hour of Generator	T = 4.91 (X) + 115.59	161	4	50%	50%	81	80	0.90
PM Peak Hour of Generator	---	---	---	---	---	---	---	---
Saturday	---	---	---	---	---	---	---	---
Saturday Peak Hour of Gen.	---	---	---	---	---	---	---	---
AM Peak of Adjacent Street 7-9 AM***	T = 0.275 (PM Peak Hour)	12		60%	40%	7	5	
Saturday Peak Hour***	T = 1.325 (PM Peak Hour)	58		50%	50%	29	29	

* Percentages rounded to nearest 5%
(---) Not Given

**Based on ratio of AM/PM traffic for LUC 820, Shopping Center
***Saturday Peak Hour comes from a ratio of PM to Saturday trip rates from LUC 820 - Shopping Center

JN: 3138.03
Project Description: Portland Foreside
Project Location: Portland, Maine
Date: 11/11/2019
Calculated By: EAL

Gorrill Palmer Consulting Engineers
707 Sable Oaks Drive
South Portland, ME 04106

Quality Restaurant
Land Use Code (LUC) 931

Gross Floor Area (ft^2): 3,200

Time Period	ITE Trip Rate (Average Rate)	Trip Ends	Directional Split		Directional Distribution	
			IN	OUT	IN	OUT
Weekday	T = 89.95 (X)	288	50%	50%	144	144
AM Peak Adjacent Street	T = 0.81 (X)	3	50%	50%	2	1
PM Peak Adjacent Street	T = 7.49 (X)	24	65%	35%	16	8
AM Peak of Generator	T = 5.57 (X)	18	80%	20%	14	4
PM Peak of Generator	T = 9.02 (X)	29	60%	40%	17	12
Saturday	T = 94.36 (X)	302	50%	50%	151	151
Saturday Peak Hour of Gen.	T = 10.82 (X)	35	60%	40%	21	14

JN: 3138.03
Project Description: Portland Foreside
Project Location: Portland, Maine
Date: 11/11/2019
Calculated By: EAL

Gorrill Palmer Consulting Engineers
707 Sable Oaks Drive
South Portland, ME 04106

General Office Building
Land Use Code (LUC) 710

Square Feet 3,200

Trip Ends Based on Fitted Curve Equation

Time Period	ITE Trip Rate	Trip Ends	Number of Studies	Directional Split *		Directional Distribution		R^2
				IN	OUT	IN	OUT	
Weekday	Ln (T) = 0.77 Ln (X) + 3.65	94	78	50%	50%	47	47	0.80
AM Peak Hour	**Ln (T) = 0.80 Ln (X) + 1.55**	**12**	**217**	**90%**	**10%**	**11**	**1**	**0.83**
PM Peak Hour	**T = 1.12 (X) + 78.81**	**82**	**235**	**15%**	**85%**	**12**	**70**	**0.82**
Saturday	T = 2.14 (X) + 18.47	25	17	50%	50%	13	12	0.66
Peak Hour of Generator	Ln (T) = 0.81 Ln (X) - 0.12	2	10	55%	45%	1	1	0.59

* Percentages rounded to nearest 5%

Trip Ends Based on Average Rate

Time Period	ITE Trip Rate	Trip Ends	Number of Studies	Directional Split *		Directional Distribution		R^2
				IN	OUT	IN	OUT	
Weekday	T = 11.01 (X)	35	78	50%	50%	18	17	---
AM Peak Hour	T = 1.55 (X)	5	217	90%	10%	5	0	---
PM Peak Hour	T = 1.49 (X)	5	235	15%	85%	1	4	---
Saturday	T = 2.37 (X)	8	17	50%	50%	4	4	---
Saturday Peak Hour of Gen.	**T = 0.41 (X)**	**1**	**10**	**50%**	**50%**	**1**	**0**	**---**

* Percentages rounded to nearest 5%

PM Peak Hour:	T = 1.49/1.55 (AM Peak)	12		15%	85%	2	10	0.82

JN: 3138.03
Project Description: Portland Foreside
Project Location: Portland, Maine
Date: 11/11/2019
Calculated By: EAL
Checked By:

Gorrill Palmer Consulting Engineers
707 Sable Oaks Drive
South Portland, ME 04106

Apartment
Land Use Code (LUC) 220

Dwelling Units: 2

Average Rate

Time Period	ITE Trip Rate	Sample Size	Trip Ends		Directional Split * IN	Directional Split * OUT	Directional Distribution IN	Directional Distribution OUT	R^2
Weekday	T = 6.72 (X)	86	13		50%	50%	7	6	N/A
AM Peak Hour of Adj. Street Traffic	**T = 0.51 (X)**	**78**	**1**		**20%**	**80%**	**0**	**1**	**N/A**
PM Peak Hour of Adj. Street Traffic	**T = 0.62 (X)**	**90**	**1**		**65%**	**35%**	**1**	**0**	**N/A**
AM Peak Hour of Generator	**T = 0.55 (X)**	**81**	**1**		**30%**	**70%**	**0**	**1**	**N/A**
PM Peak Hour of Generator	**T = 0.67 (X)**	**83**	**1**		**60%**	**40%**	**1**	**0**	**N/A**
Saturday	T = 6.39 (X)	15	13		50%	50%	7	6	N/A
Saturday Peak Hour of Gen.	**T = 0.52 (X)**	**14**	**1**	**	**50%**	**50%**	**1**	**0**	**N/A**

* Percentages rounded to nearest 5%
** Not Available (Assumption)

Fitted Curve Equation

Time Period	ITE Trip Rate	Sample Size	Trip Ends		Directional Split * IN	Directional Split * OUT	Directional Distribution IN	Directional Distribution OUT	R^2
Weekday	T = 6.01 (X) + 150.35	86	162		50%	50%	81	81	0.88
AM Peak Hour of Adj. Street Traffic	T = 0.49 (X) + 3.73	78	5		20%	80%	1	4	0.83
PM Peak Hour of Adj. Street Traffic	T = 0.55 (X) + 17.65	90	19		65%	35%	12	7	0.77
AM Peak Hour of Generator	T = 0.53 (X) + 4.21	81	5		30%	70%	2	3	0.82
PM Peak Hour of Generator	T = 0.60 (X) + 17.52	83	19		60%	40%	11	8	0.80
Saturday	T = 7.85 (X) - 256.19	15	-240		50%	50%	-120	-120	0.85
Saturday Peak Hour of Gen.	T = 0.41 (X) + 19.23	14	20	**	50%	50%	10	10	0.56

* Percentages rounded to nearest 5%
** Not Available (Assumption)

JN: 3138.03
Project Description: Portland Foreside
Project Location: Portland, Maine
Date: 11/11/2019
Calculated By: EAL

Gorrill Palmer Consulting Engineers
707 Sable Oaks Drive
South Portland, ME 04106

Quality Restaurant
Land Use Code (LUC) 931

Gross Floor Area (ft^2): 17,950

Time Period	ITE Trip Rate (Average Rate)	Trip Ends	Directional Split		Directional Distribution	
			IN	OUT	IN	OUT
Weekday	T = 89.95 (X)	1615	50%	50%	808	807
AM Peak Adjacent Street	T = 0.81 (X)	15	50%	50%	8	7
PM Peak Adjacent Street	T = 7.49 (X)	134	65%	35%	87	47
AM Peak of Generator	T = 5.57 (X)	100	80%	20%	80	20
PM Peak of Generator	T = 9.02 (X)	162	60%	40%	97	65
Saturday	T = 94.36 (X)	1694	50%	50%	847	847
Saturday Peak Hour of Gen.	T = 10.82 (X)	194	60%	40%	116	78

JN: 3138.03
Project Description: Portland Foreside
Project Location: Portland, Maine
Date: 11/11/2019
Calculated By: EAL
Checked By:

Gorrill Palmer Consulting Engineers
707 Sable Oaks Drive
Suite 30
South Portland, Maine 04106

Specialty Retail Center- (7th Edition)
Land Use Code (LUC) 814

Gross Floor Area (ft^2): 17,950

Average Rate

Time Period	ITE Trip Rate	Trip Ends	Number of Studies	Directional Split * IN	Directional Split * OUT	Directional Distribution IN	Directional Distribution OUT	R^2
Weekday	T = 44.32 (X)	796	4	50%	50%	398	398	---
Peak Hour of Adjacent Street Traffic 7-9 AM**	---	---	---	---	---	---	---	---
Peak Hour of Adjacent Street Traffic 4-6 PM	**T = 2.71 (X)**	**49**	**5**	**45%**	**55%**	**22**	**27**	**---**
AM Peak Hour of Generator	**T = 6.84 (X)**	**123**	**4**	**50%**	**50%**	**62**	**61**	**---**
PM Peak Hour of Generator	**T = 5.02 (X)**	**90**	**3**	**55%**	**45%**	**50**	**40**	**---**
Saturday	T = 42.04 (X)	755	3	50%	50%	378	377	---
Saturday Peak Hour of Gen.***	---	---	---	---	---	---	---	---
AM Peak of Adjacent Street 7-9 AM**	**T = 0.275 (PM Peak Hour)**	**13**		**60%**	**40%**	**8**	**5**	
Saturday Peak Hour***	**T = 1.325 (PM Peak Hour)**	**65**		**50%**	**50%**	**33**	**32**	

**Based on ratio of AM/PM traffic for LUC 820, Shopping Center
***Saturday Peak Hour comes from a ratio of PM to Saturday trip rates from LUC 820 - Shopping Center
* Percentages rounded to nearest 5%

Fitted Curve Equation

Time Period	ITE Trip Rate	Trip Ends	Number of Studies	Directional Split * IN	Directional Split * OUT	Directional Distribution IN	Directional Distribution OUT	R^2
Weekday	T = 42.78 (X) + 37.66	806	4	50%	50%	403	403	0.69
Peak Hour of Adjacent Street Traffic 7-9 AM	---	---	---	---	---	---	---	---
Peak Hour of Adjacent Street Traffic 4-6 PM	T = 2.40 (X) + 21.48	65	5	45%	55%	29	36	0.98
AM Peak Hour of Generator	T = 4.91 (X) + 115.59	204	4	50%	50%	102	102	0.90
PM Peak Hour of Generator	---	---	---	---	---	---	---	---
Saturday	---	---	---	---	---	---	---	---
Saturday Peak Hour of Gen.	---	---	---	---	---	---	---	---
AM Peak of Adjacent Street 7-9 AM***	T = 0.275 (PM Peak Hour)	18		60%	40%	11	7	
Saturday Peak Hour***	T = 1.325 (PM Peak Hour)	86		50%	50%	43	43	

* Percentages rounded to nearest 5%
(---) Not Given

**Based on ratio of AM/PM traffic for LUC 820, Shopping Center
***Saturday Peak Hour comes from a ratio of PM to Saturday trip rates from LUC 820 - Shopping Center

JN: 3138.03
Project Description: Portland Foreside
Project Location: Portland, Maine
Date: 11/11/2019
Calculated By: EAL

Gorrill Palmer Consulting Engineers
707 Sable Oaks Drive
South Portland, ME 04106

General Office Building
Land Use Code (LUC) 710

Square Feet 12,400

Trip Ends Based on Fitted Curve Equation

Time Period	ITE Trip Rate	Trip Ends	Number of Studies	Directional Split *		Directional Distribution		R^2
				IN	OUT	IN	OUT	
Weekday	Ln (T) = 0.77 Ln (X) + 3.65	267	78	50%	50%	134	133	0.80
AM Peak Hour	**Ln (T) = 0.80 Ln (X) + 1.55**	**35**	**217**	**90%**	**10%**	**32**	**3**	**0.83**
PM Peak Hour	**T = 1.12 (X) + 78.81**	**93**	**235**	**15%**	**85%**	**14**	**79**	**0.82**
Saturday	T = 2.14 (X) + 18.47	45	17	50%	50%	23	22	0.66
Peak Hour of Generator	Ln (T) = 0.81 Ln (X) - 0.12	7	10	55%	45%	4	3	0.59

* Percentages rounded to nearest 5%

Trip Ends Based on Average Rate

Time Period	ITE Trip Rate	Trip Ends	Number of Studies	Directional Split *		Directional Distribution		R^2
				IN	OUT	IN	OUT	
Weekday	T = 11.01 (X)	137	78	50%	50%	69	68	---
AM Peak Hour	T = 1.55 (X)	19	217	90%	10%	17	2	---
PM Peak Hour	T = 1.49 (X)	18	235	15%	85%	3	15	---
Saturday	T = 2.37 (X)	29	17	50%	50%	15	14	---
Saturday Peak Hour of Gen.	**T = 0.41 (X)**	**5**	**10**	**50%**	**50%**	**3**	**2**	**---**

* Percentages rounded to nearest 5%

PM Peak Hour:	T = 1.49/1.55 (AM Peak)	34		15%	85%	5	29	0.82

JN: 3138.03
Project Description: Portland Foreside
Project Location: Portland, Maine
Date: 11/11/2019
Calculated By: EAL
Checked By:

Gorrill Palmer Consulting Engineers
707 Sable Oaks Drive
Suite 30
South Portland, Maine 04106

Specialty Retail Center- (7th Edition)
Land Use Code (LUC) 814

Gross Floor Area (ft^2): 1,100

Average Rate

Time Period	ITE Trip Rate	Trip Ends	Number of Studies	Directional Split * IN	Directional Split * OUT	Directional Distribution IN	Directional Distribution OUT	R^2
Weekday	T = 44.32 (X)	49	4	50%	50%	25	24	---
Peak Hour of Adjacent Street Traffic 7-9 AM**	---	---	---	---	---	---	---	---
Peak Hour of Adjacent Street Traffic 4-6 PM	**T = 2.71 (X)**	**3**	**5**	**45%**	**55%**	**1**	**2**	**---**
AM Peak Hour of Generator	**T = 6.84 (X)**	**8**	**4**	**50%**	**50%**	**4**	**4**	**---**
PM Peak Hour of Generator	**T = 5.02 (X)**	**6**	**3**	**55%**	**45%**	**3**	**3**	**---**
Saturday	T = 42.04 (X)	46	3	50%	50%	23	23	---
Saturday Peak Hour of Gen.***	---	---	---	---	---	---	---	---
AM Peak of Adjacent Street 7-9 AM**	**T = 0.275 (PM Peak Hour)**	**1**		**60%**	**40%**	**1**	**0**	
Saturday Peak Hour***	**T = 1.325 (PM Peak Hour)**	**4**		**50%**	**50%**	**2**	**2**	

**Based on ratio of AM/PM traffic for LUC 820, Shopping Center
***Saturday Peak Hour comes from a ratio of PM to Saturday trip rates from LUC 820 - Shopping Center
* Percentages rounded to nearest 5%

Fitted Curve Equation

Time Period	ITE Trip Rate	Trip Ends	Number of Studies	Directional Split * IN	Directional Split * OUT	Directional Distribution IN	Directional Distribution OUT	R^2
Weekday	T = 42.78 (X) + 37.66	85	4	50%	50%	43	42	0.69
Peak Hour of Adjacent Street Traffic 7-9 AM	---	---	---	---	---	---	---	---
Peak Hour of Adjacent Street Traffic 4-6 PM	T = 2.40 (X) + 21.48	24	5	45%	55%	11	13	0.98
AM Peak Hour of Generator	T = 4.91 (X) + 115.59	121	4	50%	50%	61	60	0.90
PM Peak Hour of Generator	---	---	---	---	---	---	---	---
Saturday	---	---	---	---	---	---	---	---
Saturday Peak Hour of Gen.	---	---	---	---	---	---	---	---
AM Peak of Adjacent Street 7-9 AM***	T = 0.275 (PM Peak Hour)	7		60%	40%	4	3	
Saturday Peak Hour***	T = 1.325 (PM Peak Hour)	32		50%	50%	16	16	

**Based on ratio of AM/PM traffic for LUC 820, Shopping Center
***Saturday Peak Hour comes from a ratio of PM to Saturday trip rates from LUC 820 - Shopping Center
* Percentages rounded to nearest 5%
(---) Not Given

JN: 3138.03
Project Description: Portland Foreside
Project Location: Portland, Maine
Date: 11/11/2019
Calculated By: EAL
Checked By:

Gorrill Palmer Consulting Engineers
707 Sable Oaks Drive
South Portland, ME 04106

Apartment
Land Use Code (LUC) 220

Dwelling Units: 12

Average Rate

Time Period	ITE Trip Rate	Sample Size	Trip Ends		Directional Split * IN	Directional Split * OUT	Directional Distribution IN	Directional Distribution OUT	R^2
Weekday	T = 6.72 (X)	86	81		50%	50%	41	40	N/A
AM Peak Hour of Adj. Street Traffic	**T = 0.51 (X)**	**78**	**6**		**20%**	**80%**	**1**	**5**	**N/A**
PM Peak Hour of Adj. Street Traffic	**T = 0.62 (X)**	**90**	**7**		**65%**	**35%**	**5**	**2**	**N/A**
AM Peak Hour of Generator	**T = 0.55 (X)**	**81**	**7**		**30%**	**70%**	**2**	**5**	**N/A**
PM Peak Hour of Generator	**T = 0.67 (X)**	**83**	**8**		**60%**	**40%**	**5**	**3**	**N/A**
Saturday	T = 6.39 (X)	15	77		50%	50%	39	38	N/A
Saturday Peak Hour of Gen.	**T = 0.52 (X)**	**14**	**6**	**	**50%**	**50%**	**3**	**3**	**N/A**

* Percentages rounded to nearest 5%
** Not Available (Assumption)

Fitted Curve Equation

Time Period	ITE Trip Rate	Sample Size	Trip Ends		Directional Split * IN	Directional Split * OUT	Directional Distribution IN	Directional Distribution OUT	R^2
Weekday	T = 6.01 (X) + 150.35	86	222		50%	50%	111	111	0.88
AM Peak Hour of Adj. Street Traffic	T = 0.49 (X) + 3.73	78	10		20%	80%	2	8	0.83
PM Peak Hour of Adj. Street Traffic	T = 0.55 (X) + 17.65	90	24		65%	35%	16	8	0.77
AM Peak Hour of Generator	T = 0.53 (X) + 4.21	81	11		30%	70%	3	8	0.82
PM Peak Hour of Generator	T = 0.60 (X) + 17.52	83	25		60%	40%	15	10	0.80
Saturday	T = 7.85 (X) - 256.19	15	-162		50%	50%	-81	-81	0.85
Saturday Peak Hour of Gen.	T = 0.41 (X) + 19.23	14	24	**	50%	50%	12	12	0.56

* Percentages rounded to nearest 5%
** Not Available (Assumption)

NCHRP 8-51 Internal Trip Capture Estimation Tool			
Project Name:	58 Fore Street Redevelopment	**Organization:**	GP
Project Location:	Portland, Maine	**Performed By:**	EAL
Scenario Description:	Block 1	**Date:**	11/11/2019
Analysis Year:		**Checked By:**	
Analysis Period:	**AM Street Peak Hour**	**Date:**	

Table 1-A: Base Vehicle-Trip Generation Estimates (Single-Use Site Estimate)

Land Use	Development Data (*For Information Only*)			Estimated Vehicle-Trips		
	ITE LUCs[1]	Quantity	Units	Total	Entering	Exiting
Office	710			227	205	22
Retail				21	13	8
Restaurant	932			18	10	8
Cinema/Entertainment				0		
Residential				7	1	6
Hotel				0		
All Other Land Uses[2]	435			0	0	0
Total				273	229	44

Table 2-A: Mode Split and Vehicle Occupancy Estimates

Land Use	Entering Trips			Exiting Trips		
	Veh. Occ.	% Transit	% Non-Motorized	Veh. Occ.	% Transit	% Non-Motorized
Office						
Retail						
Restaurant						
Cinema/Entertainment						
Residential						
Hotel						
All Other Land Uses[2]						

Table 3-A: Average Land Use Interchange Distances (Feet Walking Distance)

Origin (From)	Destination (To)					
	Office	Retail	Restaurant	Cinema/Entertainment	Residential	Hotel
Office						
Retail						
Restaurant						
Cinema/Entertainment						
Residential						
Hotel						

Table 4-A: Internal Person-Trip Origin-Destination Matrix*

Origin (From)	Destination (To)					
	Office	Retail	Restaurant	Cinema/Entertainment	Residential	Hotel
Office		4	2	0	0	0
Retail	2		1	0	0	0
Restaurant	2	1		0	0	0
Cinema/Entertainment	0	0	0		0	0
Residential	0	0	1	0		0
Hotel	0	0	0	0	0	

Table 5-A: Computations Summary

	Total	Entering	Exiting
All Person-Trips	273	229	44
Internal Capture Percentage	10%	6%	30%
External Vehicle-Trips[3]	247	216	31
External Transit-Trips[4]	0	0	0
External Non-Motorized Trips[4]	0	0	0

Table 6-A: Internal Trip Capture Percentages by Land Use

Land Use	Entering Trips	Exiting Trips
Office	2%	27%
Retail	38%	38%
Restaurant	40%	38%
Cinema/Entertainment	N/A	N/A
Residential	0%	17%
Hotel	N/A	N/A

[1]Land Use Codes (LUCs) from *Trip Generation Informational Report*, published by the Institute of Transportation Engineers.

[2]Total estimate for all other land uses at mixed-use development site-not subject to internal trip capture computations in this estimator

[3]Vehicle-trips computed using the mode split and vehicle occupancy values provided in Table 2-A

[4]Person-Trips

*Indicates computation that has been rounded to the nearest whole number.

Estimation Tool Developed by the Texas Transportation Institute

Project Name:	58 Fore Street Redevelopment
Analysis Period:	**AM Street Peak Hour**

Table 7-A: Conversion of Vehicle-Trip Ends to Person-Trip Ends

Land Use	Table 7-A (D): Entering Trips			Table 7-A (O): Exiting Trips		
	Veh. Occ.	Vehicle-Trips	Person-Trips*	Veh. Occ.	Vehicle-Trips	Person-Trips*
Office	1.00	205	205	1.00	22	22
Retail	1.00	13	13	1.00	8	8
Restaurant	1.00	10	10	1.00	8	8
Cinema/Entertainment	1.00	0	0	1.00	0	0
Residential	1.00	1	1	1.00	6	6
Hotel	1.00	0	0	1.00	0	0

Table 8-A (O): Internal Person-Trip Origin-Destination Matrix (Computed at Origin)

Origin (From)	Destination (To)					
	Office	Retail	Restaurant	Cinema/Entertainment	Residential	Hotel
Office		6	14	0	0	0
Retail	2		1	0	1	0
Restaurant	2	1		0	0	0
Cinema/Entertainment	0	0	0		0	0
Residential	0	0	1	0		0
Hotel	0	0	0	0	0	

Table 8-A (D): Internal Person-Trip Origin-Destination Matrix (Computed at Destination)

Origin (From)	Destination (To)					
	Office	Retail	Restaurant	Cinema/Entertainment	Residential	Hotel
Office		4	2	0	0	0
Retail	8		5	0	0	0
Restaurant	29	1		0	0	0
Cinema/Entertainment	0	0	0		0	0
Residential	6	2	2	0		0
Hotel	6	1	1	0	0	

Table 9-A (D): Internal and External Trips Summary (Entering Trips)

Destination Land Use	Person-Trip Estimates			External Trips by Mode*		
	Internal	External	Total	Vehicles[1]	Transit[2]	Non-Motorized[2]
Office	4	201	205	201	0	0
Retail	5	8	13	8	0	0
Restaurant	4	6	10	6	0	0
Cinema/Entertainment	0	0	0	0	0	0
Residential	0	1	1	1	0	0
Hotel	0	0	0	0	0	0
All Other Land Uses[3]	0	0	0	0	0	0

Table 9-A (O): Internal and External Trips Summary (Exiting Trips)

Origin Land Use	Person-Trip Estimates			External Trips by Mode*		
	Internal	External	Total	Vehicles[1]	Transit[2]	Non-Motorized[2]
Office	6	16	22	16	0	0
Retail	3	5	8	5	0	0
Restaurant	3	5	8	5	0	0
Cinema/Entertainment	0	0	0	0	0	0
Residential	1	5	6	5	0	0
Hotel	0	0	0	0	0	0
All Other Land Uses[3]	0	0	0	0	0	0

[1]Vehicle-trips computed using the mode split and vehicle occupancy values provided in Table 2-A

[2]Person-Trips

[3]Total estimate for all other land uses at mixed-use development site-not subject to internal trip capture computations in this estimator

*Indicates computation that has been rounded to the nearest whole number.

NCHRP 8-51 Internal Trip Capture Estimation Tool			
Project Name:	58 Fore Street Redevelopment	**Organization:**	GP
Project Location:	Portland, Maine	**Performed By:**	EAL
Scenario Description:	Block 1	**Date:**	11/11/2019
Analysis Year:		**Checked By:**	
Analysis Period:	**PM Street Peak Hour**	**Date:**	

Table 1-P: Base Vehicle-Trip Generation Estimates (Single-Use Site Estimate)

Land Use	Development Data (*For Information Only*)			Estimated Vehicle-Trips		
	ITE LUCs[1]	Quantity	Units	Total	Entering	Exiting
Office	710			219	33	186
Retail				77	34	43
Restaurant	932			158	103	55
Cinema/Entertainment				0		
Residential				8	6	2
Hotel				0		
All Other Land Uses[2]	435			0	0	0
Total				462	176	286

Table 2-P: Mode Split and Vehicle Occupancy Estimates

Land Use	Entering Trips			Exiting Trips		
	Veh. Occ.	% Transit	% Non-Motorized	Veh. Occ.	% Transit	% Non-Motorized
Office						
Retail						
Restaurant						
Cinema/Entertainment						
Residential						
Hotel						
All Other Land Uses[2]						

Table 3-P: Average Land Use Interchange Distances (Feet Walking Distance)

Origin (From)	Destination (To)					
	Office	Retail	Restaurant	Cinema/Entertainment	Residential	Hotel
Office						
Retail						
Restaurant						
Cinema/Entertainment						
Residential						
Hotel						

Table 4-P: Internal Person-Trip Origin-Destination Matrix*

Origin (From)	Destination (To)					
	Office	Retail	Restaurant	Cinema/Entertainment	Residential	Hotel
Office		3	2	0	0	0
Retail	1		12	0	3	0
Restaurant	2	17		0	1	0
Cinema/Entertainment	0	0	0		0	0
Residential	0	1	0	0		0
Hotel	0	0	0	0	0	

Table 5-P: Computations Summary

	Total	Entering	Exiting
All Person-Trips	462	176	286
Internal Capture Percentage	18%	24%	15%
External Vehicle-Trips[3]	378	134	244
External Transit-Trips[4]	0	0	0
External Non-Motorized Trips[4]	0	0	0

Table 6-P: Internal Trip Capture Percentages by Land Use

Land Use	Entering Trips	Exiting Trips
Office	9%	3%
Retail	62%	37%
Restaurant	14%	36%
Cinema/Entertainment	N/A	N/A
Residential	67%	50%
Hotel	N/A	N/A

[1]Land Use Codes (LUCs) from *Trip Generation Informational Report*, published by the Institute of Transportation Engineers.

[2]Total estimate for all other land uses at mixed-use development site-not subject to internal trip capture computations in this estimator

[3]Vehicle-trips computed using the mode split and vehicle occupancy values provided in Table 2-P

[4]Person-Trips

*Indicates computation that has been rounded to the nearest whole number.

Estimation Tool Developed by the Texas Transportation Institute

Project Name:	58 Fore Street Redevelopment
Analysis Period:	**PM Street Peak Hour**

Table 7-P: Conversion of Vehicle-Trip Ends to Person-Trip Ends

Land Use	Table 7-P (D): Entering Trips			Table 7-P (O): Exiting Trips		
	Veh. Occ.	Vehicle-Trips	Person-Trips*	Veh. Occ.	Vehicle-Trips	Person-Trips*
Office	1.00	33	33	1.00	186	186
Retail	1.00	34	34	1.00	43	43
Restaurant	1.00	103	103	1.00	55	55
Cinema/Entertainment	1.00	0	0	1.00	0	0
Residential	1.00	6	6	1.00	2	2
Hotel	1.00	0	0	1.00	0	0

Table 8-P (O): Internal Person-Trip Origin-Destination Matrix (Computed at Origin)

Origin (From)	Destination (To)					
	Office	Retail	Restaurant	Cinema/Entertainment	Residential	Hotel
Office		37	7	0	4	0
Retail	1		12	2	11	2
Restaurant	2	23		4	10	4
Cinema/Entertainment	0	0	0		0	0
Residential	0	1	0	0		0
Hotel	0	0	0	0	0	

Table 8-P (D): Internal Person-Trip Origin-Destination Matrix (Computed at Destination)

Origin (From)	Destination (To)					
	Office	Retail	Restaurant	Cinema/Entertainment	Residential	Hotel
Office		3	2	0	0	0
Retail	10		30	0	3	0
Restaurant	10	17		0	1	0
Cinema/Entertainment	2	1	3		0	0
Residential	19	3	14	0		0
Hotel	0	1	5	0	0	

Table 9-P (D): Internal and External Trips Summary (Entering Trips)

Destination Land Use	Person-Trip Estimates			External Trips by Mode*		
	Internal	External	Total	Vehicles[1]	Transit[2]	Non-Motorized[2]
Office	3	30	33	30	0	0
Retail	21	13	34	13	0	0
Restaurant	14	89	103	89	0	0
Cinema/Entertainment	0	0	0	0	0	0
Residential	4	2	6	2	0	0
Hotel	0	0	0	0	0	0
All Other Land Uses[3]	0	0	0	0	0	0

Table 9-P (O): Internal and External Trips Summary (Exiting Trips)

Origin Land Use	Person-Trip Estimates			External Trips by Mode*		
	Internal	External	Total	Vehicles[1]	Transit[2]	Non-Motorized[2]
Office	5	181	186	181	0	0
Retail	16	27	43	27	0	0
Restaurant	20	35	55	35	0	0
Cinema/Entertainment	0	0	0	0	0	0
Residential	1	1	2	1	0	0
Hotel	0	0	0	0	0	0
All Other Land Uses[3]	0	0	0	0	0	0

[1]Vehicle-trips computed using the mode split and vehicle occupancy values provided in Table 2-P

[2]Person-Trips

[3]Total estimate for all other land uses at mixed-use development site-not subject to internal trip capture computations in this estimator

*Indicates computation that has been rounded to the nearest whole number.

11-11-19 Combined Shared Parking Demand.xlsx

	Block 1A					Block 4					Building 12							Block 2							Shared Spaces			
	Block 1A		Block 1A		Total for Block 1A	Block 1A		Block 4		Total for Block 4	Building 12		Building 12		Building 12		Total for Building 12	Block 2		Block 2		Block 2		Total for Block 2	Combined Subtotal			
	Office		Specialty Retail			Specialty Retail		Residential			Office		Restaurant		Residential			Office		Restaurant		Specialty Retail						
Rate	400	1/400 sf	200	1 / 200 sf		200	1 / 200 sf	1	1 per Unit		400	1/400 sf	153.8462	6.5/1000 6:00AM-4:00PM	1	1 per Unit		400	1/400 sf	153.8462	6.5/1000 6:00AM-4:00PM	200	1 / 200 sf			Mixed Use Reduction (1)	Non-Residential Other Modes Reduction (2)	Building 12 Total
Monthly Adjustment				1			1		1				100	10/1000 4:00PM-11:00PM		1				100	10/1000 4:00PM-11:00PM		1			14%	18.0%	
SQF or Unit	95,100	95100 sf	9,300	9300 sf		1,100	1100 sf	12	12 Units		3,200	3,200 sf	3,200	3,200 sf	2	2 Units		12,400	12400 sf	17,950	17950 sf	17,950	17950 sf					
6:00AM	0.00	0	0.00	0	0	0.00	0	0.84	10	10	0.00	0	0.00	0	0.84	2	2	0.00	0	0.00	0	0.00	0	0	12	2	2	8
7:00AM	0.20	48	0.20	9	57	0.20	1	0.62	7	9	0.20	2	0.10	2	0.62	1	5	0.20	6	0.10	12	0.20	18	36	36	5	6	25
8:00AM	0.64	152	0.64	30	181	0.64	4	0.41	5	8	0.64	5	0.10	2	0.41	1	8	0.64	20	0.10	12	0.64	57	89	89	12	14	63
9:00AM	0.93	221	0.93	43	265	0.93	5	0.34	4	9	0.93	7	0.20	4	0.34	1	12	0.93	29	0.20	23	0.93	84	136	136	19	21	96
10:00AM	1.00	238	1.00	46	284	1.00	5	0.32	4	9	1.00	8	0.30	6	0.32	1	15	1.00	31	0.30	35	1.00	90	156	156	22	24	110
11:00AM	1.00	238	1.00	46	284	1.00	5	0.31	4	9	1.00	8	0.90	19	0.31	1	27	1.00	31	0.90	105	1.00	90	226	226	32	35	159
12:00PM	0.90	213	0.90	42	255	0.90	5	0.30	4	9	0.90	7	1.00	21	0.30	1	29	0.90	28	1.00	117	0.90	80	225	225	32	35	158
1:00PM	0.90	213	0.90	42	255	0.90	5	0.31	4	9	0.90	7	0.90	19	0.31	1	27	0.90	28	0.90	105	0.90	80	213	213	30	33	150
2:00PM	1.00	238	1.00	47	284	1.00	6	0.33	4	9	1.00	8	0.65	14	0.33	1	22	1.00	31	0.65	76	1.00	90	197	197	28	30	139
3:00PM	1.00	238	1.00	47	284	1.00	6	0.37	4	10	1.00	8	0.35	7	0.37	1	16	1.00	31	0.35	41	1.00	90	162	162	23	25	114
4:00PM	0.93	221	0.93	43	265	0.93	5	0.45	5	11	0.93	7	0.35	11	0.45	1	20	0.93	29	0.35	63	0.93	84	175	175	25	27	123
5:00PM	0.64	152	0.64	30	181	0.64	4	0.61	7	11	0.64	5	0.60	19	0.61	1	26	0.64	20	0.60	108	0.64	57	185	185	26	29	130
6:00PM	0.20	48	0.20	9	57	0.20	1	0.69	8	9	0.20	2	0.90	29	0.69	1	32	0.20	6	0.90	162	0.20	18	186	186	26	29	131
7:00PM	0.10	24	0.00	0	24	0.00	0	0.72	9	9	0.10	1	1.00	32	0.72	1	34	0.10	3	1.00	180	0.00	0	183	183	26	28	129
8:00PM	0.10	24	0.00	0	24	0.00	0	0.80	10	10	0.10	1	1.00	32	0.80	2	34	0.10	3	1.00	180	0.00	0	183	183	26	28	129
9:00PM	0.10	24	0.00	0	24	0.00	0	0.89	11	11	0.10	1	1.00	32	0.89	2	35	0.10	3	1.00	180	0.00	0	183	183	26	28	129
10:00PM	0.10	24	0.00	0	24	0.00	0	0.92	11	11	0.10	1	0.75	24	0.92	2	27	0.10	3	0.75	135	0.00	0	138	138	19	21	98
Dedicated spaces	0.00	0	0.00	0	0	0.00	0			#REF!	0.00	0	0.00	0			0	0.00	0	0.00	0	0.00	0	0				

(1) Based on the results from the NCHRP 684 Internal Trip Capture Estimation Tool

(2) Based on Commute to Work data from the 2009-2013 ACS by Census Tract for the City of Portland provided by GPCOG

Location Map

Figure No. 1

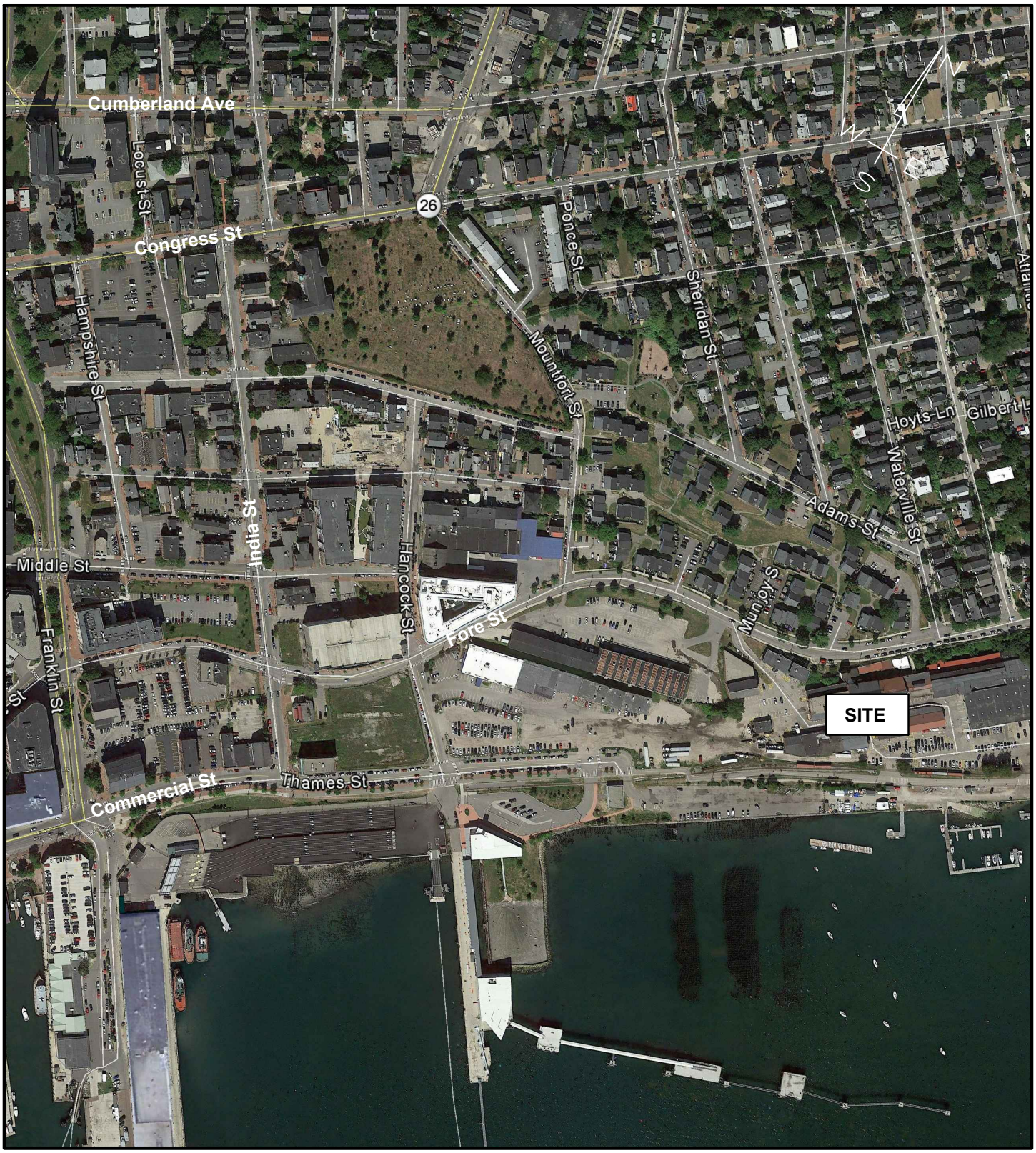

PORTLAND FORESIDE
PORTLAND, MAINE

Design:	ET	Scale:	NONE
Draft:	LAN	Date:	OCT 2015
Checked:	RED	File Name:	3138-TRAFF.dwg

GORRILL PALMER
Relationships. Responsiveness. Results.
www.gorrillpalmer.com
207.772.2515

2027 Predevelopment DHV

Figure No. 2

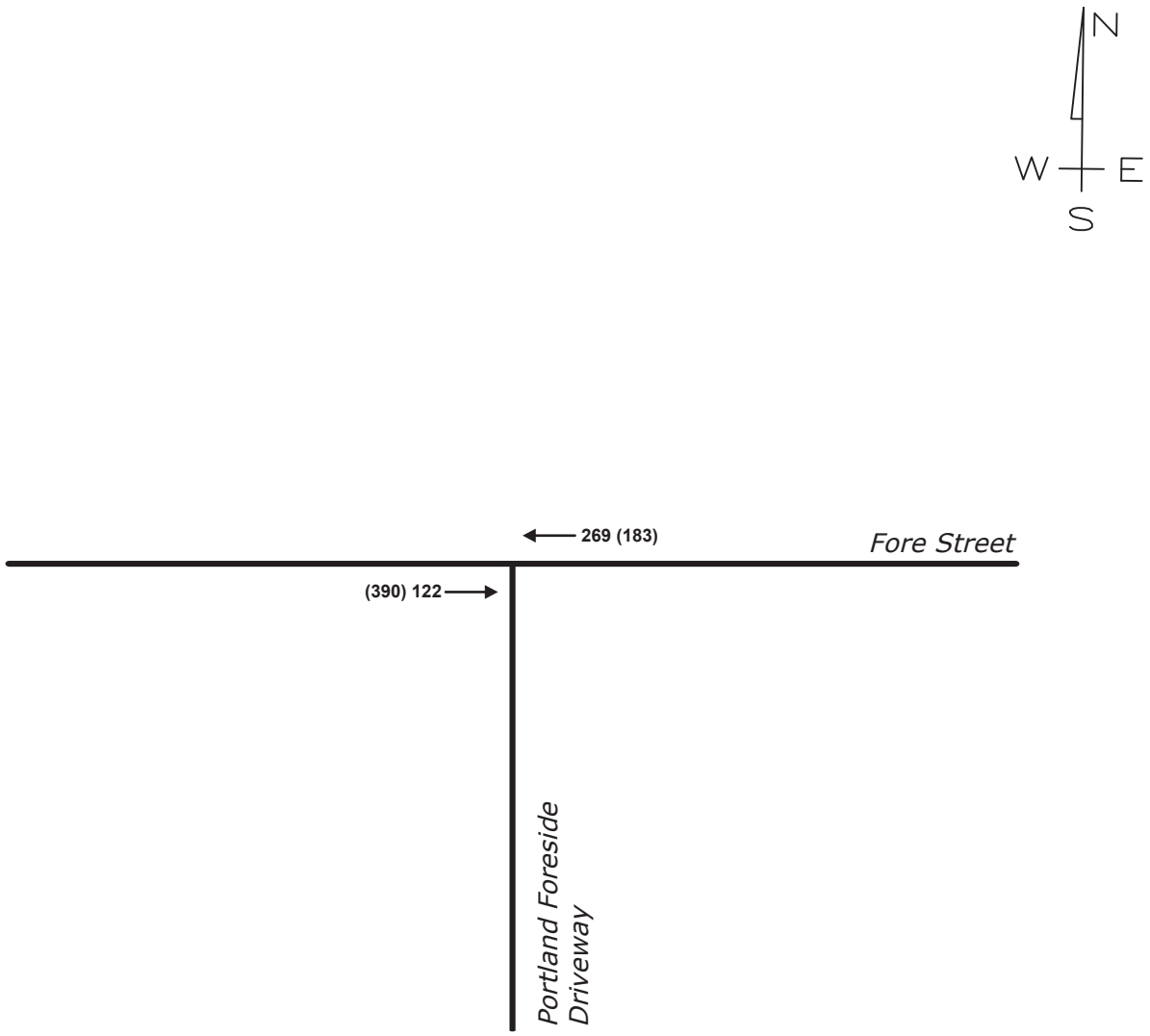

XX = AM Peak Hour
(XX) = PM Peak Hour

PORTLAND FORESIDE
PORTLAND, MAINE

Design:	MC	Scale:	NONE
Draft:		Date:	November 7, 2019
Checked:	EAL	File Name:	3138.03 Figures

GORRILL PALMER
Relationships. Responsiveness. Results.
www.gorrillpalmer.com
207.772.2515

Trip Assignment

Figure No. 3

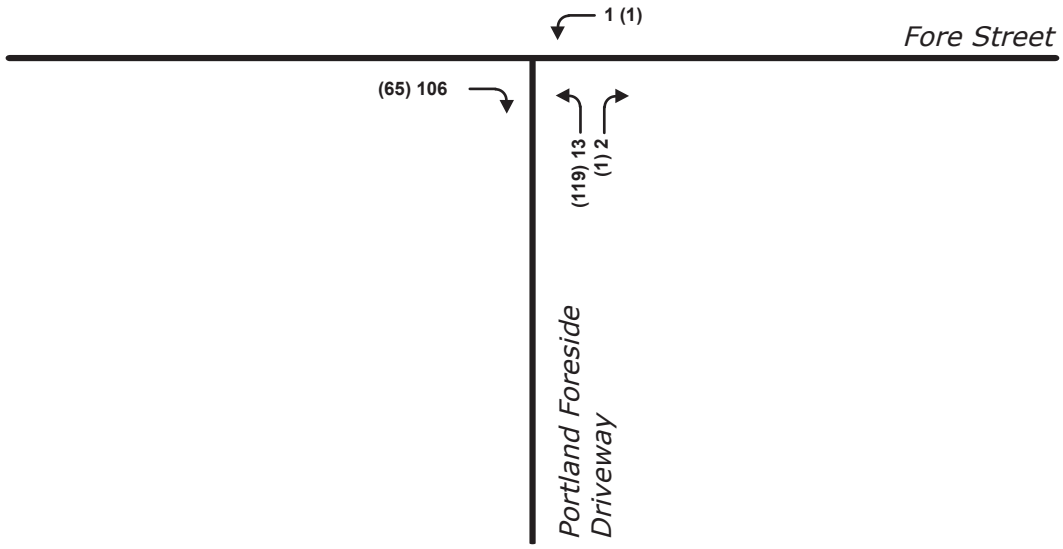

	AM	PM
IN	178	110
OUT	25	200
TOTAL	203	310

Note: This driveway expected to expierence 60% of overall traffic

XX = AM Peak Hour
(XX) = PM Peak Hour

PORTLAND FORESIDE
PORTLAND, MAINE

Design: MC Scale: NONE
Draft: Date: November 7, 2019
Checked: EAL File Name: 3138.03 Figures

GORRILL PALMER
Relationships. Responsiveness. Results.
www.gorrillpalmer.com
207.772.2515

Event Space Trip Assignment

Figure No. 4

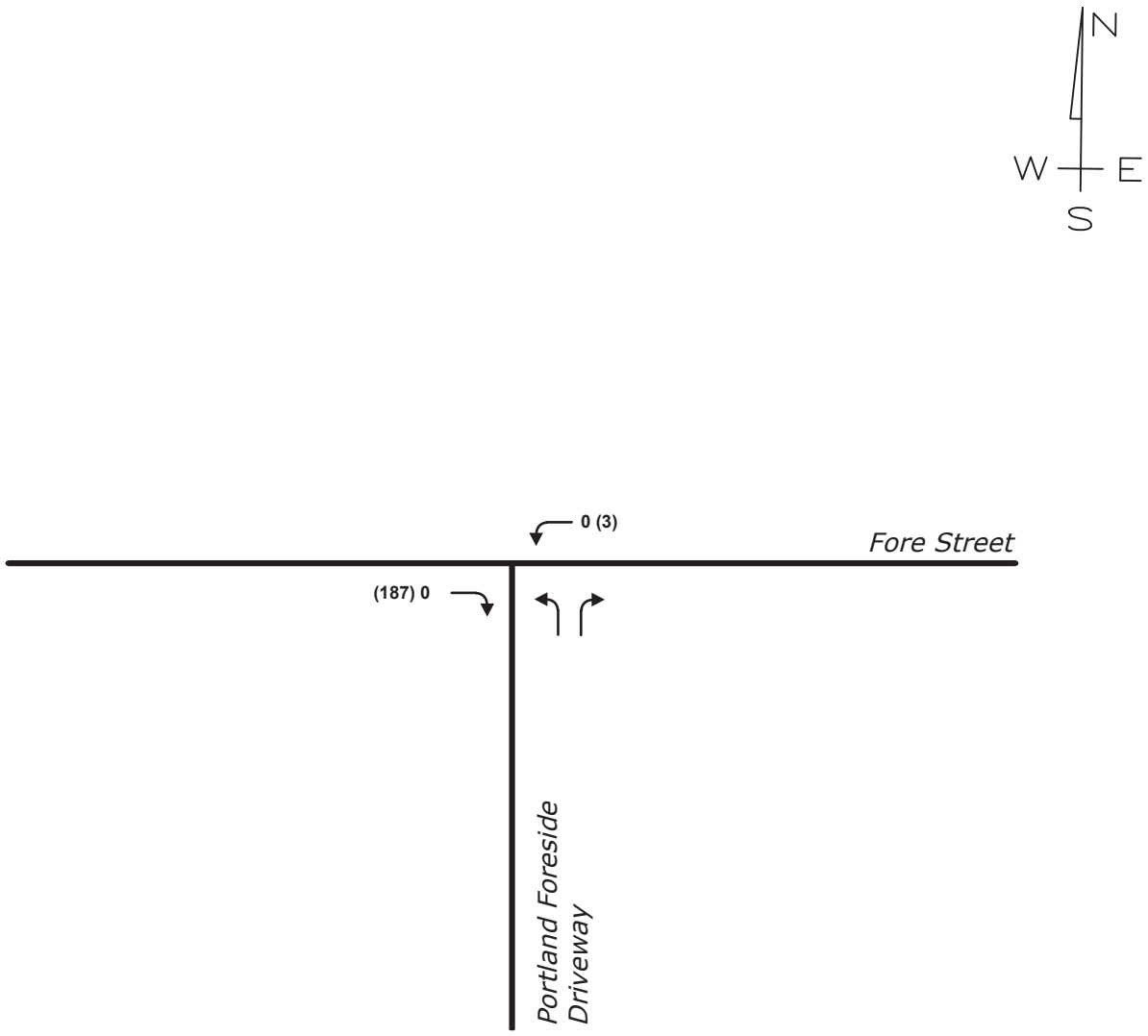

	AM	PM
IN	0	316
OUT	0	0
TOTAL	0	316

Note: This driveway expected to expierence 60% of overall traffic

XX = AM Peak Hour
(XX) = PM Peak Hour

PORTLAND FORESIDE
PORTLAND, MAINE

Design: MC Scale: NONE
Draft: Date: November 7, 2019
Checked: EAL File Name: 3138.03 Figures

GORRILL PALMER
Relationships. Responsiveness. Results.
www.gorrillpalmer.com
207.772.2515

Postdevelopment DHV

Figure No. 4

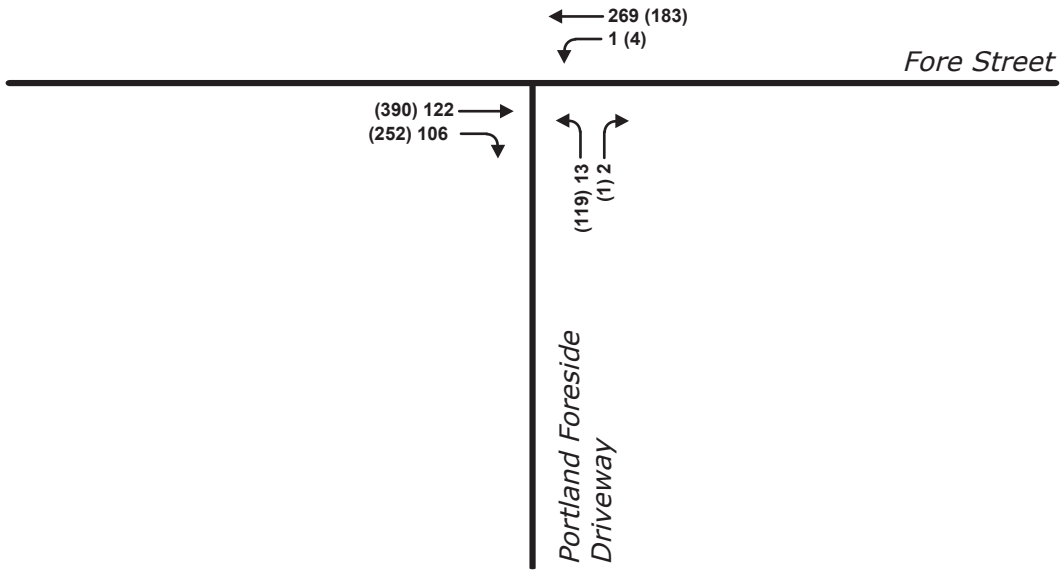

XX = AM Peak Hour
(XX) = PM Peak Hour

PORTLAND FORESIDE
PORTLAND, MAINE

Design:	MC	Scale:	NONE
Draft:		Date:	November 7, 2019
Checked:	EAL	File Name:	3138.03 Figures

GORRILL PALMER
Relationships. Responsiveness. Results.
www.gorrillpalmer.com
207.772.2515

Summary of All Intervals

Run Number	1	2	3	4	5	Avg
Start Time	6:57	6:57	6:57	6:57	6:57	6:57
End Time	8:00	8:00	8:00	8:00	8:00	8:00
Total Time (min)	63	63	63	63	63	63
Time Recorded (min)	60	60	60	60	60	60
# of Intervals	2	2	2	2	2	2
# of Recorded Intervals	1	1	1	1	1	1
Vehs Entered	521	554	522	541	481	522
Vehs Exited	524	553	525	542	480	525
Starting Vehs	4	3	3	2	1	1
Ending Vehs	1	4	0	1	2	1
Denied Entry Before	0	0	0	0	0	0
Denied Entry After	0	1	0	0	0	0
Travel Distance (mi)	81	86	81	84	74	81
Travel Time (hr)	3.1	3.2	3.0	3.2	2.8	3.1
Total Delay (hr)	0.2	0.1	0.1	0.2	0.1	0.1
Total Stops	19	14	18	16	14	15
Fuel Used (gal)	2.7	2.9	2.6	2.9	2.4	2.7

Interval #0 Information Seeding

Start Time	6:57
End Time	7:00
Total Time (min)	3

Volumes adjusted by Growth Factors.

No data recorded this interval.

Interval #1 Information Recording

Start Time	7:00
End Time	8:00
Total Time (min)	60

Volumes adjusted by Growth Factors.

Run Number	1	2	3	4	5	Avg
Vehs Entered	521	554	522	541	481	522
Vehs Exited	524	553	525	542	480	525
Starting Vehs	4	3	3	2	1	1
Ending Vehs	1	4	0	1	2	1
Denied Entry Before	0	0	0	0	0	0
Denied Entry After	0	1	0	0	0	0
Travel Distance (mi)	81	86	81	84	74	81
Travel Time (hr)	3.1	3.2	3.0	3.2	2.8	3.1
Total Delay (hr)	0.2	0.1	0.1	0.2	0.1	0.1
Total Stops	19	14	18	16	14	15
Fuel Used (gal)	2.7	2.9	2.6	2.9	2.4	2.7

3: Fore Street & Proposed Driveway Performance by approach

Approach	NW	NE	SW	All
Denied Del/Veh (s)	0.1	0.2	0.2	0.2
Total Del/Veh (s)	5.3	0.8	0.1	0.6
Denied Entry Before	0	0	0	0
Denied Entry After	0	0	0	0

Total Network Performance

Denied Del/Veh (s)	0.2
Total Del/Veh (s)	0.8
Denied Entry Before	0
Denied Entry After	0

Intersection: 3: Fore Street & Proposed Driveway

Movement	NW	NE
Directions Served	LR	TR
Maximum Queue (ft)	35	17
Average Queue (ft)	12	1
95th Queue (ft)	37	9
Link Distance (ft)	436	411
Upstream Blk Time (%)		
Queuing Penalty (veh)		
Storage Bay Dist (ft)		
Storage Blk Time (%)		
Queuing Penalty (veh)		

Network Summary

Network wide Queuing Penalty: 0

Summary of All Intervals

Run Number	1	2	3	4	5	Avg
Start Time	6:57	6:57	6:57	6:57	6:57	6:57
End Time	8:00	8:00	8:00	8:00	8:00	8:00
Total Time (min)	63	63	63	63	63	63
Time Recorded (min)	60	60	60	60	60	60
# of Intervals	2	2	2	2	2	2
# of Recorded Intervals	1	1	1	1	1	1
Vehs Entered	931	996	910	1004	920	954
Vehs Exited	925	993	910	998	916	949
Starting Vehs	2	6	4	3	8	4
Ending Vehs	8	9	4	9	12	9
Denied Entry Before	0	0	0	0	3	0
Denied Entry After	0	0	0	1	0	0
Travel Distance (mi)	146	157	143	158	145	150
Travel Time (hr)	6.4	7.4	6.3	7.3	6.6	6.8
Total Delay (hr)	1.0	1.5	1.0	1.4	1.1	1.2
Total Stops	123	146	100	137	129	128
Fuel Used (gal)	5.7	6.5	5.6	6.4	5.8	6.0

Interval #0 Information Seeding

Start Time	6:57
End Time	7:00
Total Time (min)	3

Volumes adjusted by Growth Factors.

No data recorded this interval.

Interval #1 Information Recording

Start Time	7:00
End Time	8:00
Total Time (min)	60

Volumes adjusted by Growth Factors.

Run Number	1	2	3	4	5	Avg
Vehs Entered	931	996	910	1004	920	954
Vehs Exited	925	993	910	998	916	949
Starting Vehs	2	6	4	3	8	4
Ending Vehs	8	9	4	9	12	9
Denied Entry Before	0	0	0	0	3	0
Denied Entry After	0	0	0	1	0	0
Travel Distance (mi)	146	157	143	158	145	150
Travel Time (hr)	6.4	7.4	6.3	7.3	6.6	6.8
Total Delay (hr)	1.0	1.5	1.0	1.4	1.1	1.2
Total Stops	123	146	100	137	129	128
Fuel Used (gal)	5.7	6.5	5.6	6.4	5.8	6.0

3: Fore Street & Proposed Driveway Performance by approach

Approach	NW	NE	SW	All
Denied Del/Veh (s)	0.2	0.6	0.2	0.5
Total Del/Veh (s)	14.9	2.3	0.3	3.5
Denied Entry Before	0	0	0	0
Denied Entry After	0	0	0	0

Total Network Performance

Denied Del/Veh (s)	0.5
Total Del/Veh (s)	4.0
Denied Entry Before	0
Denied Entry After	0

Intersection: 3: Fore Street & Proposed Driveway

Movement	NW	NE	SW
Directions Served	LR	TR	LT
Maximum Queue (ft)	118	78	47
Average Queue (ft)	50	6	3
95th Queue (ft)	92	37	20
Link Distance (ft)	436	411	329
Upstream Blk Time (%)			
Queuing Penalty (veh)			
Storage Bay Dist (ft)			
Storage Blk Time (%)			
Queuing Penalty (veh)			

Network Summary

Network wide Queuing Penalty: 0

COMMITMENT & INTEGRITY
DRIVE RESULTS

41 Hutchins Drive
Portland, Maine 04102
www.woodardcurran.com

T 800.426.4262
T 207.774.2112
F 207.774.6635

Att. U

December 4, 2019

Christian Roadman, Planner
City of Portland Planning Division
389 Congress Street
Portland, ME 04101

Re: Portland Foreside Phase 1 Level III Site Plan Submittal – Portland Foreside Development Co.
Additional Submittal Information

Dear Christian:

Thank you for coordinating the review of the proposed development of Phase 1 of the Portland Foreside Project located at 58 Fore Street in Portland, Maine. We appreciated the opportunity to meet with staff today. We are in the process of reviewing and responding to all of the comments we have received from you to date through the Level III Site Plan process and a complete response to comments will follow after next week's Planning Board Workshop. To support the continuing discussion, we are providing the following additional information on building height and parking.

Average Grade/Height Calculations

Enclosed with this letter, please find copies of the average grade calculations that identify that the proposed buildings 1A and the Townhouses are in conformance with the B6 Building Height Overlay and Building 4 is in conformance with the required Waterville Street view corridor. As Planning and Zoning review these calculations, we're happy to meet again, maybe at a future Wednesday meeting, to discuss the approach further.

I am also uploading to Eplan updated building elevations for Building 1A (file "Block 1 Build 1A A20-01 Exterior Elevation Plan (North & South)"). An elevation drawing that included incorrect floor elevations and an incorrect datum was submitted with the original application, and the new version corrects this error.

Parking Calculations

Enclosed, please find an updated parking calculation table. There was an error in the calculations previously submitted. The peak parking demand has now been calculated to be 385 spaces. With consideration given to typical parking garage capacity, to meet the parking demand, the recommended number of parking spaces for this Phase 1 project is updated to 453 spaces.

We hope the provided information is helpful in clarifying some of the items that have been discussed to date. If you have any questions or require additional information, please do not hesitate to contact me at (207) 558-3763 or by email at lswett@woodardcurran.com.

Sincerely,

WOODARD & CURRAN INC.

Lauren Swett

Lauren Swett, PE
Technical Manager

Attachments

1. Height Calculations (Building 1A, Building 4, Townhouses)
2. Updated Parking Calculations

N

FORE STREET

FORE CONNECTOR

Fore Street ROW
Grade: 30.8

Fore Street ROW
Grade: 31.8

Fore Street ROW
Grade: 31.3

100'

100'

100'

Top of Building
Elevation: 35.0
Height: 4.2'

Top of Building
Elevation: 66.33
Height: 34.5'

Top of Building
Elevation: 66.33
Height: 35.0'

100' Height Setback from
Fore Street

BUILDING 1A

TRENCH DRAIN AT BASE OF
EACH SET OF STEPS (TYP.)
(SEE LANDSCAPE PLAN)

SERTA-TEE
CONNECTION

INSERTA-WYE CONNECTION
AT EACH TRENCH DRAIN
(TYP. OF 4)

Calculation or Height Compliance @ Fore Street:	
Adjacent Grade at Fore Street:	31.3'
Max. Height Above Fore Street:	35'
Maximum Elevation:	66.3'
Building Height	66.3'

3. N/S RETAINING WALL: 31.25'

2. SECOND FLOOR SW CORNER: 31.25

4.,5. SECOND FLOOR SW CORNERS: 35

6.,7. SECOND FLOOR SW CORNERS: 35

8., 9. SECOND FLOOR MID CORNERS: 35

10., 11. SECOND FLOOR MID-CORNERS: 35

12, 13. SECOND FLOOR NE CORNER: 35'

14.,15. SECOND FLOOR NE CORNER: 31.25

16. SECOND FLOOR NE CORNER: 31.25

17. SECOND FLOOR NE CORNER: 31.25

(EXISTING PLAZA DESIGN & GRAND STAIR: 31.25)

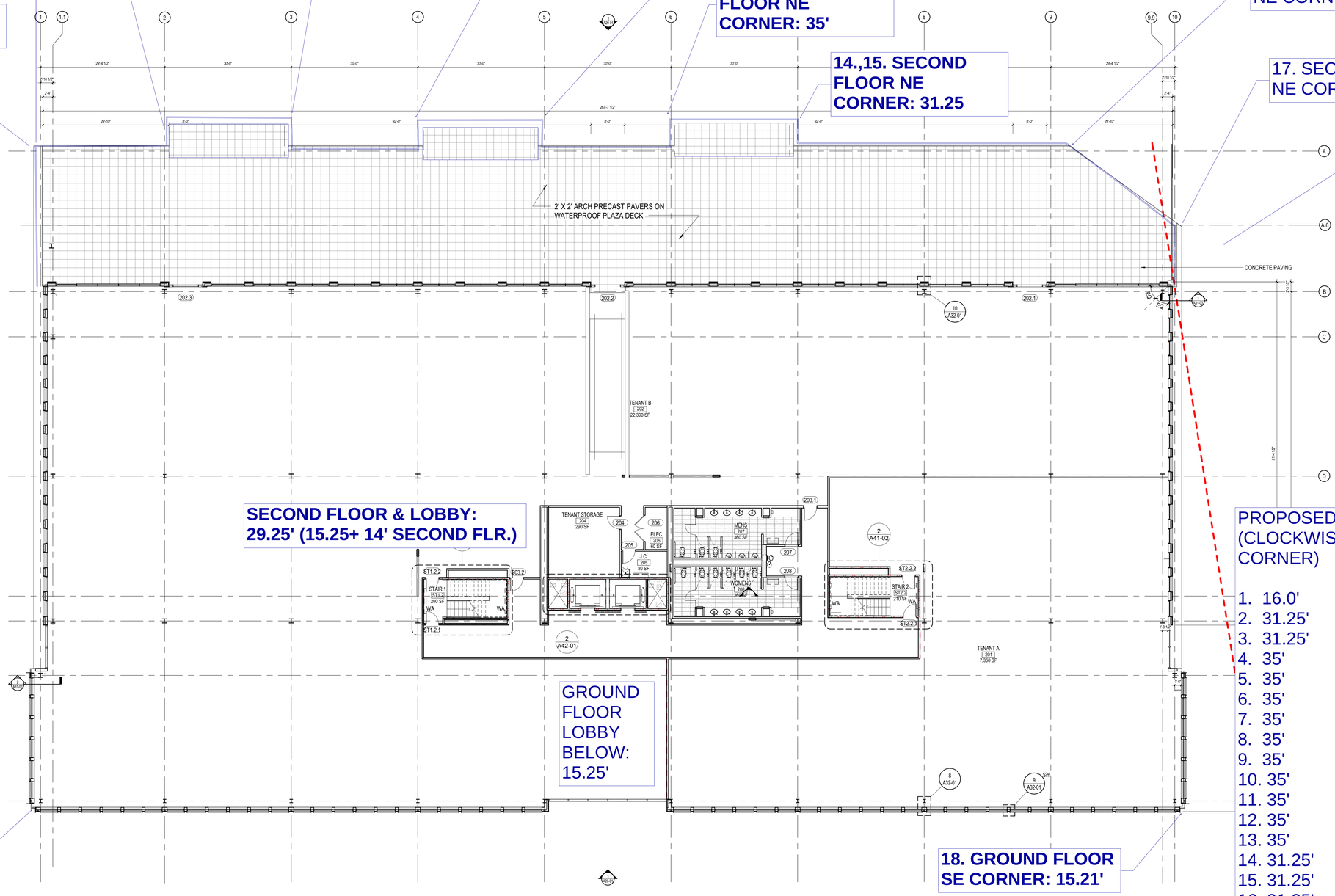

SECOND FLOOR & LOBBY: 29.25' (15.25+ 14' SECOND FLR.)

GROUND FLOOR LOBBY BELOW: 15.25'

1. GROUND FLOOR SW CORNER: 16.0'

18. GROUND FLOOR SE CORNER: 15.21'

PARTITION & DOOR NOTES

1. PARTITIONS LOCATED BY DIMENSION STRING ARE DIMENSIONED TO THE UNFINISHED FACE OF THE WALL UNLESS NOTED OTHERWISE.

2. PARTITIONS NOT DIMENSIONED ARE GENERALLY LOCATED BY ONE OF THE FOLLOWING CRITERIA:

2.1 CENTERLINE - CENTER OF PARTITION ALIGNS WITH THE CENTER OF GRIDLINE OR OBJECT CENTERLINE (SUCH AS A COLUMN OR WINDOW MULLION).
CENTER THE OVERALL PARTITION WIDTH, RATHER THAN STUD WIDTH ON THE RELATED CENTERLINE.

2.2 ALIGN - LOCATE PARTITION FLUSH WITH FACE OF ANOTHER PARTITION OR ANOTHER SURFACE AS INDICATED.

2.3 SPECIFICALLY MAINTAIN DIMENSIONS NOTED AS "MINIMUM" OR "CLEAR".

3. DOOR OPENINGS ARE DIMENSIONED TO CENTERLINE OF OPENING. IF NOT DIMENSIONED, THE HINGE SIDE OF DOOR SHALL BE SPACED 4" (INCLUDING THE JAMB) FROM THE ADJACENT WALL.

4. ALL INTERIOR PARTITIONS TO BE TYPE 'A41' U.N.O.

1 LEVEL 2 PLAN
3/32" = 1'-0"

PROPOSED DESIGN: (CLOCKWISE FROM SW CORNER)

1. 16.0'
2. 31.25'
3. 31.25'
4. 35'
5. 35'
6. 35'
7. 35'
8. 35'
9. 35'
10. 35'
11. 35'
12. 35'
13. 35'
14. 31.25'
15. 31.25'
16. 31.25'
17. 31.25'
18. 15.21'

TOTAL:
568.71 / 18 = 31.5

Perkins&Will

225 Franklin Street, Suite 1100
Boston, MA 02110
t 617.478.0300
www.perkinswill.com

CONSULTANTS

CIVIL ENGINEER
Woodard & Curran
41 Hutchins Dr
Portland, ME 04102
t 207.774.2112

STRUCTURAL + MEP ENGINEER
Rist-Frost-Shumway Engineering
50 Milk Street, 16th Floor
Boston, MA 02109
t 617.494.1464

OWNER'S CONSULTANT

LANDSCAPE ARCHITECT
Michael Boucher
457 US Route 1 Suite 2
Freeport, Maine
t 207.865.1080

PROJECT

BUILDING 1A
58 FORE ST
PORTLAND, ME 04101

FORESIDE
254 COMMERCIAL ST
SUITE 118
PORTLAND, ME 04101

KEYPLAN

NOT FOR CONSTRUCTION

ISSUE CHART

#	ISSUE	DATE

DESIGN DEVELOPMENT
JULY 26, 2019

Number	157087.000
wn	Author
cked	Checker
roved	Approver

TITLE

LEVEL 2 PLAN

SHEET NUMBER

A10-02

Copyright © 2019 Perkins+Will

7/26/2019 6:14:00 PM C:\Users\Stampskoulis\Documents\58 Fore St_Building 1A_v2019_Stampskoulis6A.rvt

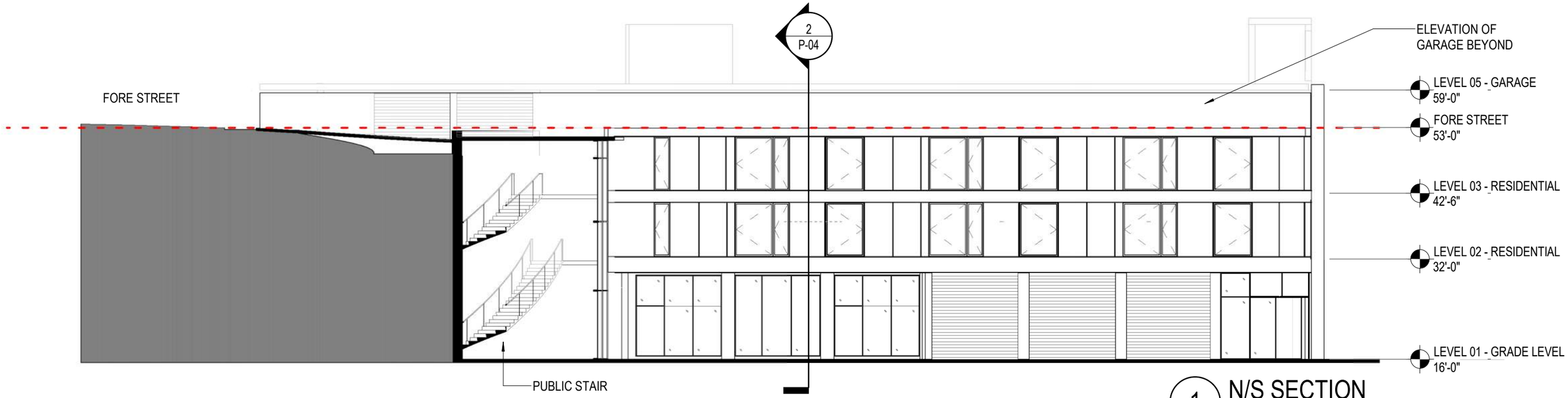

1 N/S SECTION
1/16" = 1'-0"

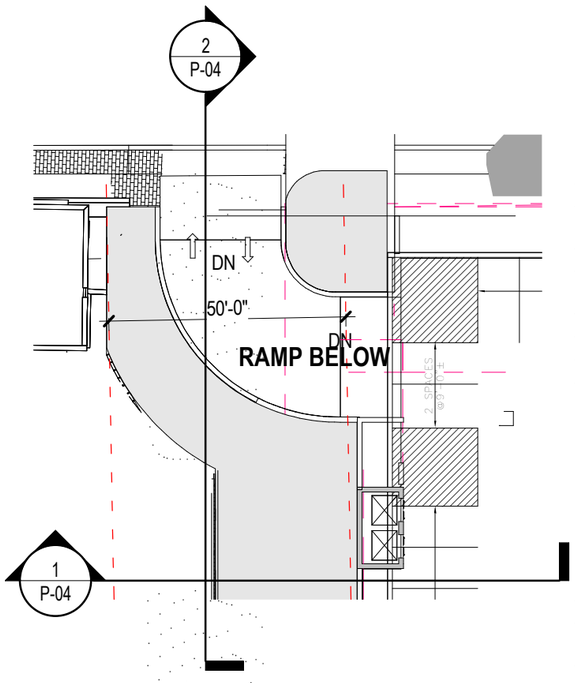

3 ROOF - ELEV. 59'-0'
1/32" = 1'-0"

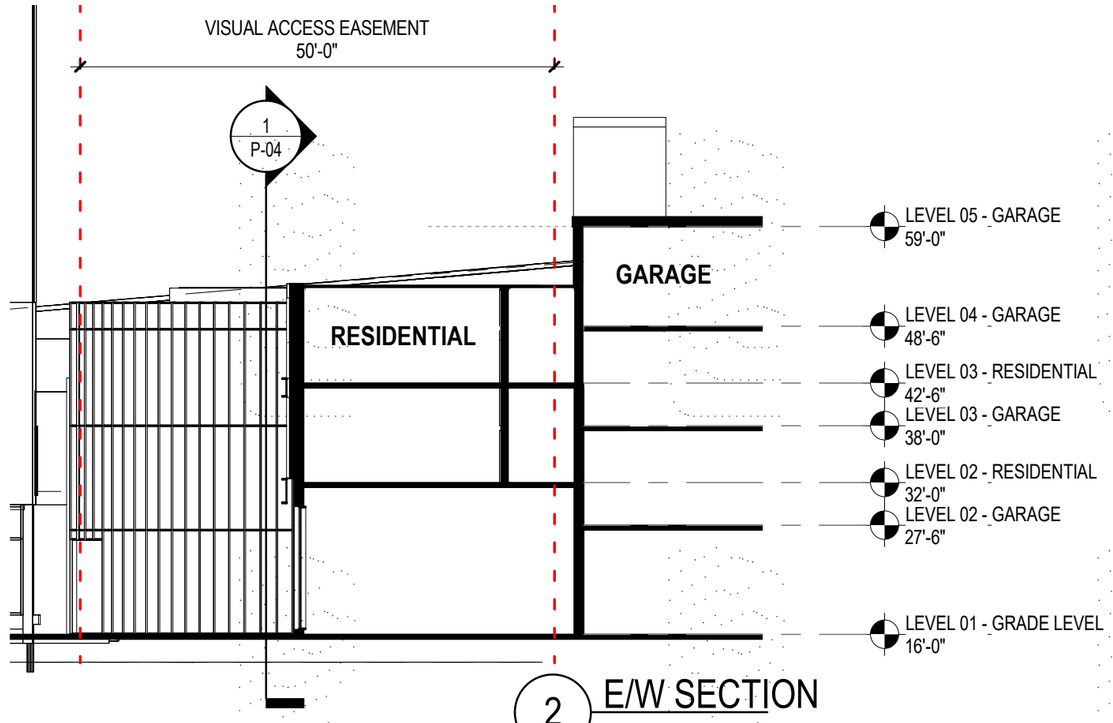

2 E/W SECTION
1/16" = 1'-0"

12/3/2019 4:20:24 PM C:\Users\MonteiromDocuments\58 FORE ST MASTERPLAN_Block Four_v2019_MonteiroM.rvt

BLOCK FOUR

BLOCK FOUR - VISUAL EASEMENT COMPLIANCE

Perkins&Will
12/03/19

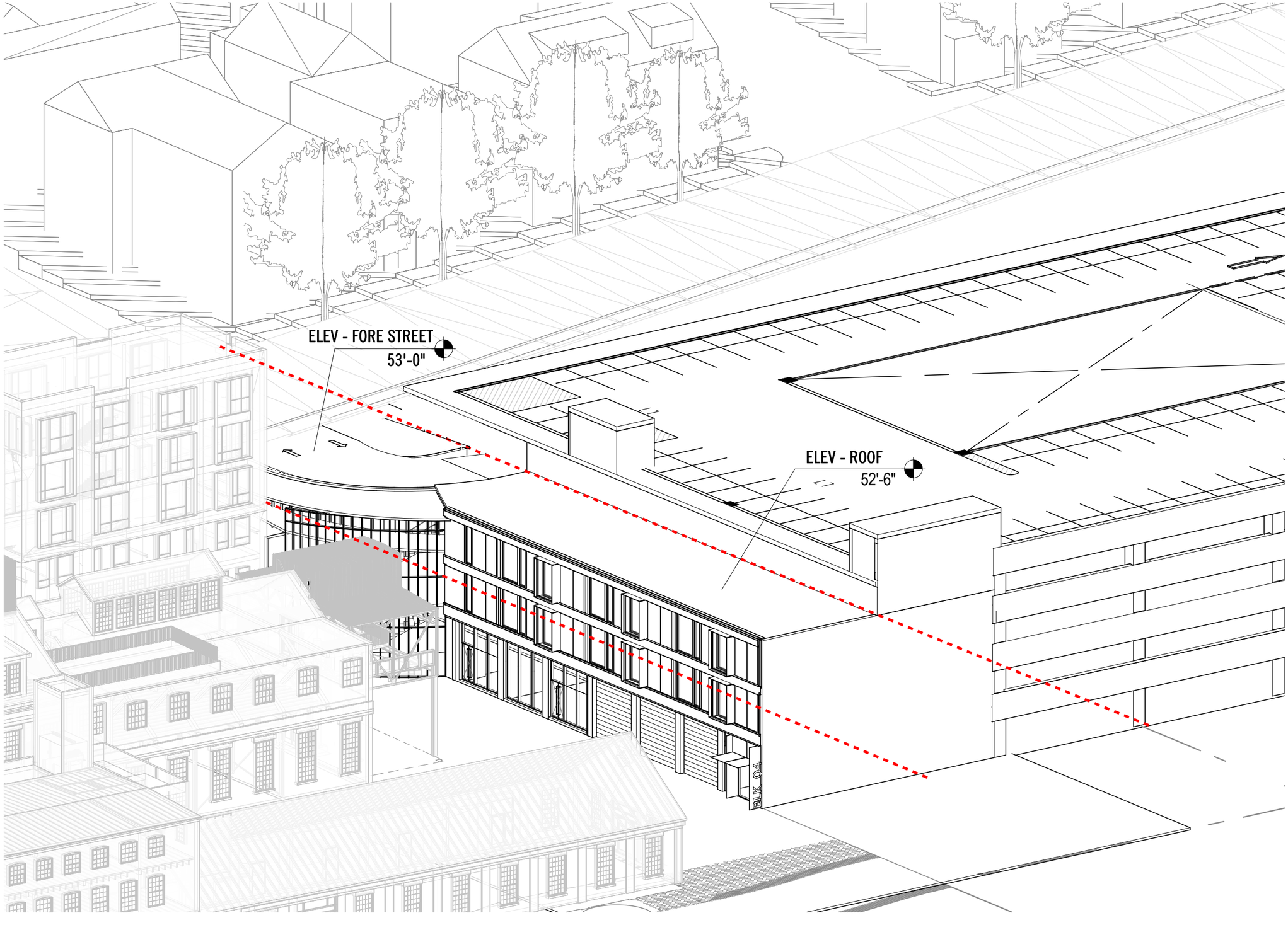

12/3/2019 5:39:13 PM C:\Users\Monteirom\Documents\58 FORE ST MASTERPLAN_Block Four_v2019_MonteiroM.rvt

BLOCK FOUR

BLOCK FOUR - SOUTH VIEW - LOOKING NORTHEAST

Perkins&Will
12/03/19

EDGE OF VIEW CORRIDOR

SPOT GRADE 46.1

SPOT GRADE 48.3

AVERAGE GRADE
(46.1 + 48.3 + 48.3 + 50.6 + 14.96 + 14.96) / 6 = 37.2

ALLOWED BUILDING HEIGHT
45' from average grade
37.2' + 45" = 82.2'

PROPOSED BUILDING HEIGHT
82'

SPOT GRADE 50.6

SPOT GRADE AT BASE OF BUILDING
14.96

SPOT GRADE
14.96

CANTILEVER FROM BASE

LOT LINE

	Block 1A					Block 4					Building 12							Block 2							Shared Spaces
	Block 1A					Block 4					Building 12							Block 2							Combined Subtotal
	Block 1A		Block 1A		Total for Block 1A	Block 4		Block 4		Total for Block 4	Building 12		Building 12		Building 12		Total for Building 12	Block 2		Block 2		Block 2		Total for Block 2	Combined Subtotal	Mixed Use Reduction (1)	Non-Residential Other Modes Reduction (2)	Reduced Total
	Office		Specialty Retail			Specialty Retail		Residential			Office		Restaurant		Residential			Office		Restaurant		Specialty Retail						
Rate	400	1/400 sf	200	1 / 200 sf		200	1 / 200 sf	1	1 per Unit		400	1/400 sf	153.8462	6.5/1000 6:00AM-4:00PM	1	1 per Unit		400	1/400 sf	153.8462	6.5/1000 6:00AM-4:00PM	200	1 / 200 sf					
Monthly Adjustment				1			1		1				100	10/1000 4:00PM-11:00PM		1				100	10/1000 4:00PM-11:00PM		1			14%	18.0%	
SQF or Unit	95,100	95100 sf	9,300	9300 sf		1,100	1100 sf	12	12 Units		3,200	3,200 sf	3,200	3,200 sf	2	2 Units		12,400	12400 sf	17,950	17950 sf	17,950	17950 sf					
6:00AM	0.00	0	0.00	0	0	0.00	0	0.84	10	10	0.00	0	0.00	0	0.84	2	2	0.00	0	0.00	0	0.00	0	0	12	2	2	8
7:00AM	0.20	48	0.20	9	57	0.20	1	0.62	7	8	0.20	2	0.10	2	0.62	1	5	0.20	6	0.10	12	0.20	18	36	106	15	16	75
8:00AM	0.64	152	0.64	30	182	0.64	4	0.41	5	9	0.64	5	0.10	2	0.41	1	8	0.64	20	0.10	12	0.64	57	89	288	40	45	203
9:00AM	0.93	221	0.93	43	264	0.93	5	0.34	4	9	0.93	7	0.20	4	0.34	1	12	0.93	29	0.20	23	0.93	84	136	421	59	65	297
10:00AM	1.00	238	1.00	46	284	1.00	5	0.32	4	9	1.00	8	0.30	6	0.32	1	15	1.00	31	0.30	35	1.00	90	156	464	65	72	327
11:00AM	1.00	238	1.00	46	284	1.00	5	0.31	4	9	1.00	8	0.90	19	0.31	1	28	1.00	31	0.90	105	1.00	90	226	547	77	85	385
12:00PM	0.90	213	0.90	42	255	0.90	5	0.30	4	9	0.90	7	1.00	21	0.30	1	29	0.90	28	1.00	117	0.90	80	225	518	73	80	365
1:00PM	0.90	213	0.90	42	255	0.90	5	0.31	4	9	0.90	7	0.90	19	0.31	1	27	0.90	28	0.90	105	0.90	80	213	504	71	78	355
2:00PM	1.00	238	1.00	47	285	1.00	6	0.33	4	10	1.00	8	0.65	14	0.33	1	23	1.00	31	0.65	76	1.00	90	197	515	72	80	363
3:00PM	1.00	238	1.00	47	285	1.00	6	0.37	4	10	1.00	8	0.35	7	0.37	1	16	1.00	31	0.35	41	1.00	90	162	473	66	73	334
4:00PM	0.93	221	0.93	43	264	0.93	5	0.45	5	10	0.93	7	0.35	11	0.45	1	19	0.93	29	0.35	63	0.93	84	176	469	66	73	330
5:00PM	0.64	152	0.64	30	182	0.64	4	0.61	7	11	0.64	5	0.60	19	0.61	1	25	0.64	20	0.60	108	0.64	57	185	403	56	62	285
6:00PM	0.20	48	0.20	9	57	0.20	1	0.69	8	9	0.20	2	0.90	29	0.69	1	32	0.20	6	0.90	162	0.20	18	186	284	40	44	200
7:00PM	0.10	24	0.00	0	24	0.00	0	0.72	9	9	0.10	1	1.00	32	0.72	1	34	0.10	3	1.00	180	0.00	0	183	250	35	39	176
8:00PM	0.10	24	0.00	0	24	0.00	0	0.80	10	10	0.10	1	1.00	32	0.80	2	35	0.10	3	1.00	180	0.00	0	183	252	35	39	178
9:00PM	0.10	24	0.00	0	24	0.00	0	0.89	11	11	0.10	1	1.00	32	0.89	2	35	0.10	3	1.00	180	0.00	0	183	253	35	39	179
10:00PM	0.10	24	0.00	0	24	0.00	0	0.92	11	11	0.10	1	0.75	24	0.92	2	27	0.10	3	0.75	135	0.00	0	138	200	28	31	141
Dedicated spaces	0.00	0	0.00	0	0	0.00	0			#REF!	0.00	0	0.00	0			0	0.00	0	0.00	0	0.00	0	0				

(1) Based on the results from the NCHRP 684 Internal Trip Capture Estimation Tool

(2) Based on Commute to Work data from the 2009-2013 ACS by Census Tract for the City of Portland provided by GPCOG

PC1

CHESTER & VESTAL

A PROFESSIONAL ASSOCIATION
ATTORNEYS AT LAW
107 Congress Street, Portland, Maine 04101
Telephone (207) 772-7426 Fax (207) 761-5822

EDWIN P. CHESTER
BARBARA A. VESTAL
KRISTINA DOUGHERTY

chester@chesterandvestal.com
vestal@chesterandvestal.com
dougherty@chesterandvestal.com

November 21, 2019

Via planningboard@portlandmaine.gov

Sean Dundon, Chair
Portland Planning Board
389 Congress Street
Portland, Maine 04101

Re: 58 Fore Street, Phase I

Dear Chair Dundon and Planning Board Members:

I am submitting comments in writing because I am unable to attend the workshop on November 26th in person. This is a massive project. I encourage the Board to take its time in reviewing it so that it receives examination commensurate with the impact that it will have on this part of Portland.

I have been following the applicant's progress through the Historic Preservation Board. One very troubling aspect, not yet at all resolved, is the treatment of the 50-foot public access easement that was granted to the City of Portland.

Some Board members will remember that the Historic Preservation Board recommended the mandatory retention of Building 1 by designating it as a contributing building within the then-proposed Portland Company Historic District. The Planning Board reversed that determination and decided to recommend that Building 1 be designated as a non-contributing building, thus allowing its demolition, **in exchange for** the developers granting a 50-foot public access easement from Fore Street, across the site of the then demolished Building 1, to the southerly boundary of the site. This public access easement was touted as a major public benefit which would justify the demolition of a massive, prominent, otherwise significant historic building. The easement was sold as a "grand stairway" from Fore Street and public plaza within the site, designed to enhance the pedestrian experience of the public. It was represented (somewhat disingenuously I believe given the range of uses envisioned) that by virtue of the public access easement, the general population would benefit from guaranteed physical and visual access across the site, even though the rest of the development may well be private and off-limits to the public.

My concern at this time is that what is being proposed in the public access easement area is a mere shadow of what was promised. The "grand stairway" has shrunk to a 12-14 foot wide set of stairs. ADA compliance is unclear, both coming down from Fore Street and at the southerly boundary. It has not been designed to be welcoming to the public, nor does it enhance the visual and physical access. A grove of trees is proposed, a portion of which is within the easement area, which would obscure part of the visual access to the water. It is not apparent that particular provisions are being made to protect pedestrians using this easement as it is crossed by a roadway. And, even more troubling, large portions of the easement area are proposed to be appropriated for private rather than public use. The needs of the private development, rather than the benefit to the public, seem to be driving the design within this public easement area and little attention has been paid to enhancing the public experience.

The City, in particular the Planning Board, negotiated this *quid pro quo*. It is the responsibility of the Planning Board, and as it impacts the design within the designated historic district, the Historic Preservation Board, to determine the design details of this public access easement and to ensure that the public is in fact getting the full benefit of the bargain that was made, for the full extent of the easement area.

I trust that a copy of the public access easement will be provided to the Board. But in case it is not, attached is a copy of the Public Access Easement which was executed on March 28, 2019 and is recorded in the Cumberland County Registry of Deeds in Book 35564, Page 30.

As stated in the easement document, CPB2 has granted to the City a **50' wide public access easement** running from Fore St to the southerly boundary of CPB2's property. The purpose is "to provide physical and visual public access to the waterfront for pedestrians within the Easement Area, which access shall include an ADA compliant access way for pedestrians, including but not limited to wheelchair access on the southerly end of the Easement Area." CPB2 "agrees not to use or permit any use, condition or state of disrepair that would be contrary to or otherwise unreasonably interfere with the use of the Easement Area by pedestrians in the manner contemplated herein." They can temporarily close all or a portion during construction, maintenance or repair activities if required to safeguard public safety. CPB2 can adopt reasonable rules for use and can grant the right to use the surface, subsurface and air space to others over the easement area for a host of primarily utility- elated purposes.

Clearly the easement is intended to allow both physical and visual access from Fore Street to the southerly boundary of CPB2s property throughout the full easement area. By its terms, the applicant must not allow any use which would interfere with the use of the entire easement area by pedestrians for physical and visual access.

The preliminary plans presented in the last few weeks seem to be ignoring the fact that this 50' strip of land has been dedicated to **PUBLIC** use. The plans show the narrowing of the stairs to only a small portion of the 50' width. By narrowing the stairs, the applicant has created retaining

walls and platforms on either side of the stairs. On the west side, the platform has been described as a possible future area for tables and chairs for an adjacent restaurant, obviously a private use. On the east side, the platform immediately adjacent to Building 24 provides access/egress for Building 24, and is designed as the fire egress for the event space proposed for the second floor of Building 2. On both sides of the stairs, private use, not public benefit, are driving this design. As shown, these uses of the public easement area are in direct opposition to the use by the public and are an impermissible private intrusion into the 50' public easement.

It was always envisioned that the specific design and improvements within the 50-foot public easement area would be resolved in negotiation with the City, at some later date. This is that later date and the Planning Board, in conjunction with the Historic Preservation Board, should be the guardians of the public interest. Building 1 has been demolished. This public easement was to be the justification for allowing that to happen. Please pay particular attention to the plans for and design of the 50-foot public access easement, assure ADA compliance, do not allow private appropriation, and require that the public experience be well-designed and of paramount concern throughout the full extent of the easement area.

Very truly yours,



Barbara A. Vestal

BAV/om
Enclosure
cc: Christine Grimando
Deb Andrews

PUBLIC ACCESS EASEMENT

KNOW ALL PERSONS BY THESE PRESENTS, that CPB2 I LLC, a Delaware limited liability company, with a place of business in Portland, Maine and mailing address of Merrill's Wharf, 254 Commercial Street, Suite, 118, Portland, Maine 04101 (the "Grantor"), FOR CONSIDERATION PAID, hereby GRANTS to the CITY OF PORTLAND, a Maine body corporate and politic, with a mailing address of City Hall, 389 Congress Street, Portland, Maine 04101 (the "Grantee" or the "City"), a fifty-foot wide public access easement (the "Access Easement") for the purpose described below, across a portion of Grantor's property in Portland, Maine, running from Fore Street to the southerly boundary of Grantor's property, in the general location depicted on the drawing attached hereto as Exhibit A and made a part hereof (the "Easement Area"), subject to the terms set forth below. The precise location of the Easement Area shall be flexible prior to final design and construction of permanent improvements to the Easement Area. When the final design of the Easement Area has been completed and prior to construction of said improvements, the Easement Area shall be more particularly described by metes and bounds in an Addendum to this Access Easement, signed by both Parties and recorded in the Cumberland County Registry of Deeds.

The purpose of the Access Easement granted herein is to provide physical and visual public access to the waterfront for pedestrians within the Easement Area, which access shall include an ADA compliant access way for pedestrians, including but not limited to wheelchair access on the southern end of the Easement Area. Additional accommodations may be provided if and as required by applicable state or federal law, including the ADA.

The Easement Area shall be subject to such rules or ordinances that Grantee may adopt from time to time in the interests of public safety. Wheelchairs and emergency vehicles as well as snow removal equipment shall be permitted in accordance with applicable federal and/or state laws regulating accessibility for such devices, vehicles or equipment. Maintenance, repair and snow removal responsibilities within the Easement Area shall belong solely to Grantor, its successors and assigns; however, Grantee shall have the right, but not the obligation, to maintain or repair the Easement Area, or to remove snow therefrom, when Grantee, in its sole discretion, deems such maintenance, repair or snow removal necessary to ensure public safety and Grantor has failed to perform the same within a reasonable time after notice from Grantee.

Grantor agrees not to use or permit any use, condition or state of disrepair that would be contrary to or otherwise unreasonably interfere with the use of the Easement Area by pedestrians in the manner contemplated herein. Provided, however, Grantor may temporarily close all or a portion of the Easement Area during construction, maintenance or repair activities if required to safeguard public safety. Grantor shall promptly correct any condition and complete any maintenance or construction activities necessitating such closure in order to minimize the duration of the closure or restriction of public access to the Easement Area. Any closures that prevent public access from Fore Street through to the waterfront shall be pursuant to and in accordance with an Access Easement Closure plan filed with and approved in advance by the City of Portland's Planning Authority.

Nothing herein contained shall be deemed to be a gift or dedication of the fee interest in the Easement Area or any portion thereof to Grantee or to the general public.

The Easement Area is and shall remain private property, and Grantor hereby expressly reserves and retains for itself and for any subsequent owner of the Easement Area, all rights of ownership to the extent the exercise thereof does not unreasonably limit or unreasonably interfere with the use of the Easement Area by pedestrians; such rights include, without limitation, (i) the right to adopt reasonable rules and regulations governing the use of the Easement Area, (ii) the right to use, or to grant to others the right to use, the surface and subsurface of and air space above the Easement Area for any use or purpose (including, without limitation, the right to install, inspect, operate, maintain, repair, replace and remove electric lines, gas lines, underground fuel tanks, telecommunication lines (such as telephone, cable and internet lines), water lines, storm sewers, sanitary sewers, catch basins, manholes, clean-outs, curbing, driveways, surface parking areas, sidewalks, landscaping, benches, information kiosks, light pole bases, lighting fixtures, retaining walls, monument signs, fountains, statues, art pieces and the like, and (iii) the right to make changes, alterations and/or improvements to the Easement Area from time to time.

This easement is given for recreational use and the Grantor and Grantee claim the rights and protections against liability in accordance with Title 14 MRS §159-A to the maximum extent permitted by law.

TO HAVE AND TO HOLD the aforegranted and bargained public access easement, with all privileges and appurtenances thereof, to the Grantee, its successors and assigns, to its and their use and behoof, forever.

IN WITNESS WHEREOF, the Grantor has caused this instrument to be executed by Casey Prentice, its Manager thereunto duly authorized, this 27 day of March, 2019.

CPB2 I LLC
By: CPB2 Management LLC, Manager

By: _____
Name: Casey Prentice
Title: Manager

STATE OF MAINE
CUMBERLAND, ss

March 27, 2019

Personally appeared the above-named Casey Prentice, for CPB2 I LLC as aforesaid, and acknowledged the foregoing instrument to be his/her free act and deed in his/her said capacity and the free act and deed of said limited liability company.

Before me,

_____
Notary Public/Attorney at Law

Print name: Janet L. Davis SEAL
My commission expires: 01-18-2021

JANET L. DAVIS
NOTARY PUBLIC
State of Maine
My Commission Expires
January 18, 2021

GRANTEE ACCEPTANCE:

The City of Portland does hereby accept the foregoing Public Access Easement, by and through City Manager Jon Jennings.

CITY OF PORTLAND

By: Jon Jennings
Its: City Manager

STATE OF MAINE
CUMBERLAND, ss

March 28th, 2019

Personally appeared the above-named Jon Jennings, for the City of Portland as aforesaid, and acknowledged the foregoing instrument to be his free act and deed in his said capacity and the free act and deed of said City of Portland.

Before me,

Notary Public/Attorney at Law

Print name: Deivy Periana
My commission expires: April 9, 2021

DEIVY PERIANA
NOTARY PUBLIC
CUMBERLAND COUNTY
MAINE
MY COMMISSION EXPIRES APRIL 9, 2021

Exhibit A

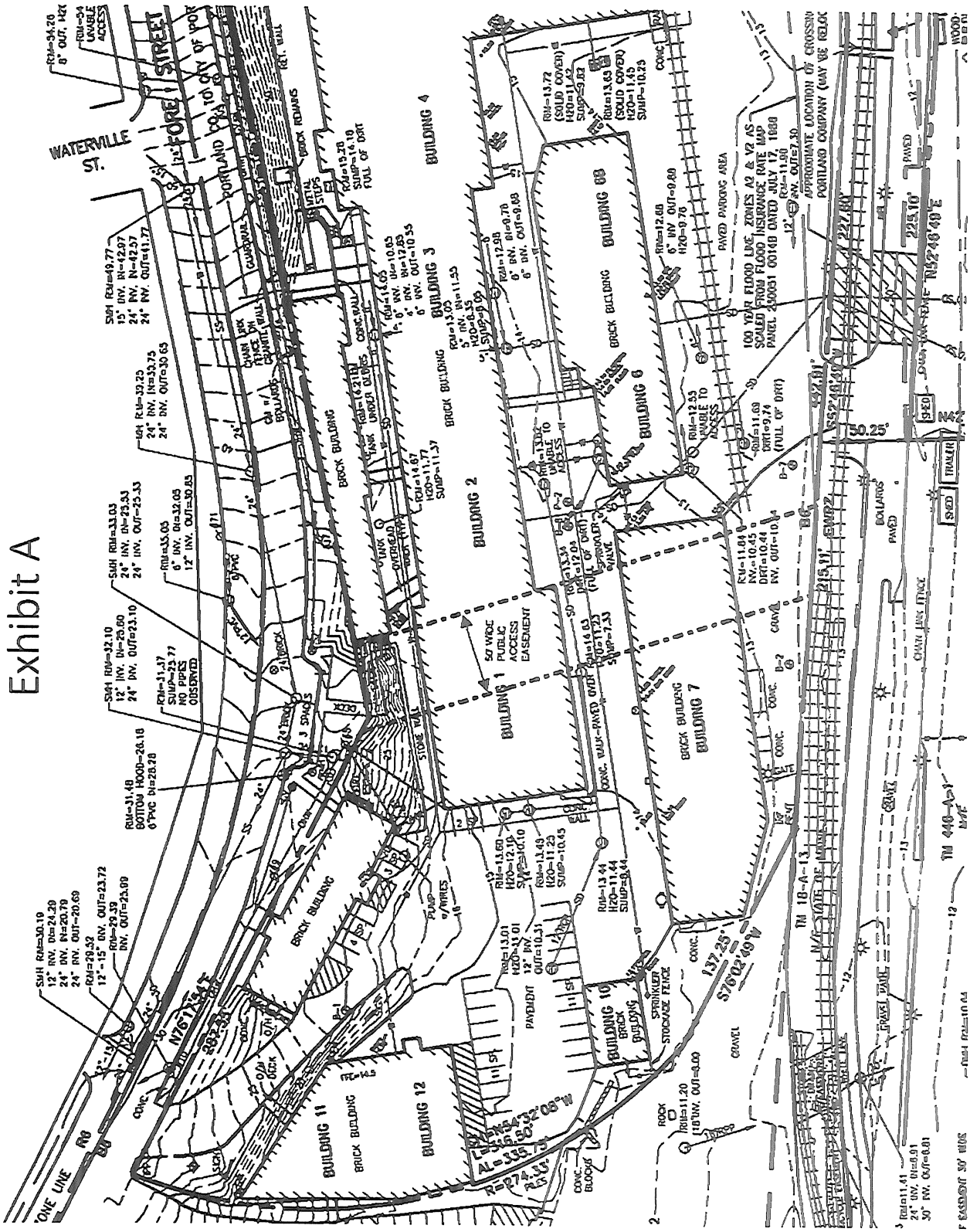

Received
Recorded Register of Deeds
Apr 05,2019 03:47:04P
Cumberland County
Nancy A. Lane

Greater Portland Landmarks
Historic character enriches our lives

21 November 2019

Sean Dundon, Chair
Portland Planning Board
389 Congress Street
Portland, ME 04101

Dear Chair Dundon and members of the Planning Board,

During the master development plan process for 58 Fore Street the Historic Preservation Board recommended the designation of Building One, the former Erecting Shop, as a contributing building in the proposed Portland Company Local Historic District. Although the Planning Board agreed with the Historic Preservation Board's findings under the Historic Preservation Ordinance criteria, they decided to change the classification of Building One to non-contributing to allow for its demolition in exchange for a public access easement. The 50' wide public access easement was granted to provide physical and visual public access to the waterfront, enhance the pedestrian environment, and preserve key views of the harbor.

As part of the easement agreement, the property owners would "not use or permit any use … that would be contrary to or otherwise unreasonably interfere with the use of the easement area by pedestrians". We believe the proposed use of the platforms flanking the plaza stair for café seating or as gathering space for the event venues, the location of the grove of trees partially within the easement area, and the narrow width of the plaza stair are counter to the intent of the public access easement.

The 12/15/2016 planning staff Design Review Report identified several design parameters to be used as guidance for future site plan applications and to be taken into consideration in order to meet the design criteria during site plan approvals. One of the eight parameters the report outlined addresses the public access easement design. It states:

> "Design of the public easement entrance on Fore Street shall be revised to provide accessibility and increased viewing opportunities in that location, as well as enhanced streetscape treatment for the public to appreciate and experience the historic building complex and the waterfront."

We believe the short run of stairs from Fore Street restrict physical accessibility to the platforms on either side of the plaza stair where views to the water and historic core can be appreciated by the public.

In its 12/14/2016 findings and recommendations regarding the master development plan's conformance with the standards of the Historic Preservation Ordinance, the Historic Preservation Board stipulated a gap of underdetermined width should be left between the east end wall of Building 16 and the new Fore Street townhouses to provide views of the historic Fore Street retaining wall and to define the limits of the historic complex. The recently submitted site plan (Drawing C-100) depicts Building 16 and the townhouses as attached, which is contrary to the stipulations of the Historic Preservation Board.

Greater Portland Landmarks

Historic character enriches our lives

The approved master development plan drawings included several 50’ wide view corridors that extend across the area under current site plan review, but they are not included on the site plans recently submitted. We believe they should be depicted on the plans and any impact of the proposal on the view corridors should be considered by the planning board during its deliberations.

The proposed garage building in Block Four, on the east end of the historic district, appears to be mostly below the level of Fore Street. Will there be rooftop mechanicals or appurtenances? What will be the view from Fore Street? We urge the board to ask the applicant for a rendering of the proposed building from the public way at Fore Street to help inform its decision-making.

Thank you for considering our comments.

Sincerely,

Julie Larry
Director of Advocacy

Google Groups

11/26/2019 PB Worskhop - 58 Fore St

Karen Snyder <karsny@yahoo.com> Nov 22, 2019 2:21 PM
Posted in group: **Planning and Urban Development**

Dear Planning Board,

There is concern from Munjoy Hill property owners regarding the 58 Fore Street project in the following areas.

1) We got notified on 11/18 of the 58 Fore St Neighborhood meeting notice for next Monday 11/25 for 5pm at St. Lawrence Theater but yet immediately the next day 11/26 is the Planning Board workshop? This appears a bit rushed as to why the Planning board workshop is so soon after the neighborhood meeting.

2) The project scope in the Planning Board workshop agenda is misleading. It is only providing the initial phase renderings and not the entire project scope. There needs to be included ALL project phase renderings of this mammoth project that will affect Munjoy Hill neighborhood.

3) There is no mention or documentation of the agreed upon 50 foot wide public easement that was a "tradeoff" for taking down Building 1. This public access easement needs to be incorporated. If the agreed upon 50 wide public easement entrance is NOT being provided then like all the rest of the "historic" buildings that are being rebuilt, Building 1 needs to be rebuilt then.

4) The streets of Waterville, St. Lawrence, Atlantic, and Munjoy currently have had wide street ocean water views for over 200 years. There needs to be renderings of all the view corridors from these streets to see if 50 feet width is sufficient because this affects a substantial amount of property owners.

5) There is extreme concern about the amount of concentrated traffic and parking at the waterfront right below Munjoy Hill neighborhood. From my estimates, there are over 3,000 potential cars that will be concentrated at the base of Munjoy Hill based on below projects. How is this traffic being addressed?

Portland, ME- Continuing and Future Traffic Congestion/Parking Issues
As of: Tuesday, 10/9/2019

Street #	Street	Districts/Neighborhoods Most Affected	Proposed Parking Spaces	Status (Source:Planning Dep)
86	Newbury St.Vet Choice/Brew Hotel	Working Waterfront/Munjoy Hill	400	Under Construction: Zoning Board of Appeals Approved:9/6/2018, 9/25/2018 Site Plan Approval
100	Fore St (Hamilton Marina/Express Copy building)	Working Waterfront/Munjoy Hill	540	City council Meeting 9/17/2018 to Approve Zoning Height Change (parking was 600 to 540)
0	Hancock St. (WEX)	Working Waterfront/Munjoy Hill	??	Construction Complete 2018
383	Commecial Street (Rufus Deering)	Working Waterfront/Munjoy Hill	313	Under Construction: Planning Board Approved 6/26/2018
184	Commecial Street (Portland Lobster Company)	Working Waterfront/Munjoy Hill	188	Pending - Planning Board Workshops4/17/2018,6/22/2018, 7/14/2018 site walk. Latest Level 3 Site Plan is 4/17/2018
1	Center Street (Commercial & Center St)	Working Waterfront/Munjoy Hill	75	**Planning Board Approved: Gone through Planning Board - 2019**
58	Fore St *Sun Life Inc. (Financial Services)*	Working Waterfront/Munjoy Hill	600	Going through Historic Preservation Board 10/3/2019 https://www.pressherald.com/2019/09/26/another-major-employer-announces-move-to-portland-waterfront/
Corner	**Spring and Cross St. Across from 1 Portland Square**	Working Waterfront/Munjoy Hill	1,000	https://www.pressherald.com/2019/10/09/parking-garage-centerpiece-of-old-port-project/
		Summary of Proposed Parking Spaces		
		Working Waterfront/Munjoy Hill	3,116	

Articles regarding I-295 Congestion

I would appreciate the above be addressed in next weeks Planning Board workshop.

Karen

PC4

Portland Maine Yes. Google's good here.

Christian Roadman <croadman@portlandmaine.gov>

Fore St Neighborhood meeting

Peter Bass <peterbass54@gmail.com> Tue, Nov 26, 2019 at 9:18 AM
To: croadman@portlandmaine.gov

>
> Christian,
> I attended the neighborhood meeting for the ForeSt. Project last night and found it woefully inadequate. This is a large and complicated project that along with cumulative development in the area will have direct effects on its neighbors. The developer only planned for an hour which was not nearly enough time to address questions and concerns of the attendees. Many questions were written down but not even attempted to be answered. Presentation graphics were inadequate to understand the details of the project. The engineering team did fine with technical questions but there was a lot that was outside of their expertise that they had no answers to. Also, the code requires that the meeting be no less than 7 days before a public meeting which this was not.
> I find a lot to like about the development but along with the rest of the attendees have concerns that didn't come close to being addressed. It felt like it was a purposefully short meeting to be able to check the box. This developer knows better and needs to engage the public properly. You need to require that they hold at least one more real neighborhood meeting, but given the size of this project there should be more. They need to send their A team and their best presentation graphics and be prepared to answer the tough questions. I am afraid that I need to recommend that a representative of the planning department needs to attend as well to be sure the developer's public obligation is met.
> I went into the meeting with a positive attitude but left angry. I was not alone. More enemies than allies were made last night.
>
> Peter Bass
> 29 Waterville St

Google Groups

11/26/19 Planning Board Meeting - 58 Fore St Unanswered Questions

Karen Snyder <karsny@yahoo.com> Nov 26, 2019 9:36 AM
Posted in group: **Planning and Urban Development**

Dear Planning Board,

The 58 Fore St "neighborhood" meeting last night was very concerning.

Firstly, there was only 1 hour to be allocated to this neighborhood meeting because St. Lawrence Theater needed the meeting to end at 6pm. Note: The Root cellar was available last night to have a longer meeting and the basement holds over 100 people.

Secondly, there were about 50 concerned residents at the meeting but yet only 50% of the questions were actually answered and weakly and vaguely at that. There was no follow-up on these questions asked but not answered.

The 58 Fore St presenters would or could not answer the following questions:

1) How many parking spots is this parking garage supposed to hold?
2) What is the final height of this parking garage and the residential housing from Fore St elevation?
3) Why is the pedestrian easement stairs only 14 feet wide instead of the easement of 50 feet is width?
4) The projected traffic is unrealistically low in the TMP permit given. If Sun Life has 1,200 employees, and the TMP parking permit is for 500 cars in the AM only, how does this traffic mgmt. permit plan suppose to include all these 1,200 Sun Life employees, 600 residents, and tourists?
-In addition, with even such a unrealistic simulated amount of AM cars of 500 cars, how is all this traffic all suppose to enter and the garage entrance at Waterville St without affecting the Munjoy Hill residential streets?
5) How are the City and the developers going to mitigate the traffic congestion overflow that will be on Munjoy Hill residential streets for the people that do not want to pay for the garage?
- Note: It is assumed that Belinda Ray has all ready halted an attempt of Waterville St property owners wanting restricted parking on their street from the 10/21 City Councilor 2nd reading of this.
6) How will the developers mitigate the additional car pollution that will be generated by this projected traffic?
7) How will the developers mitigate the light pollution coming off of the parking garage that will affect the Munjoy Hill residents?
8) Will the developers "opt out" in building affordable housing? It is estimated 63 units of affordable housing could be built.
9) What is the final building renderings including the final phase of building heights off of Fore St, all easement accesses, visual corridors, etc? None of this was even presented last night.

The 58 Fore St presenters did their "duty" to have a deliberately short "neighborhood" meeting to "check the boxes" with the City without answering the majority of the concerns of Munjoy Hill residents adequately.

I hope the above questions will be answered and documented for clarity in tonight's 11/26 Planning Board workshop for 58 Fore St at 4:30pm in Room 24 basement at City Hall.

Regards,
Karen Snyder
Munjoy Hill Property Owner

November 25, 2019

Dear Belinda,

My husband and I own and reside in an historic 3-unit building on Munjoy Hill which is currently in your district. As Hill residents for over fifteen years – and frequent users of the Eastern Prom Trail – we often walked by the dilapidated and shuttered old Portland Company Complex and wondered when someone would finally clean it up.

We've been following the developments of the 58 Fore Street project with great interest since the land and buildings were purchased a number of years ago. Now that the project finally seems to be getting underway, we're writing to let you know that we fully support this project.

After expressing interest in learning more about the 58 Fore Street project a few months ago, the developers invited us to their office and spent several hours answering questions, reviewing plans and sharing their current vision and proposed timeline.

This project represents a thoughtful blend of past and present, successfully preserving important historic buildings while replacing old, crumbling buildings of no historical significance with modern structures that will support new businesses and provide the public with needed amenities. 58 Fore Street will also provide improved views and better public access to a large portion of the Eastern waterfront that has been vastly underutilized.

In addition to offering new office and retail space, the project will also add hundreds of new residential units to a City in dire need of additional housing. In doing so, the project will also infuse the City with significant new tax revenue, which is clearly a benefit for every Portland property owner.

In short, the 58 Fore Street project will create a vibrant and exciting new neighborhood and will offer a mix of beautiful old and new spaces that Portland residents and visitors can enjoy for many years to come.

We support projects that support the greater good. We believe that 58 Fore Street does exactly that. As District 1 Councilor, we ask you to fully support this vital project as well.

Kind regards,

Pamela Jack & Devon Platte
26 North Street
Portland

Google Groups

58 Fore Street

Barbara Vestal <vestal@chesterandvestal.com> Dec 5, 2019 11:58 AM
Posted in group: **Planning Board**

Dear Chair and Planning Board Members,

I am writing today to comment upon the impact of the 58 Fore Street development on the traffic and parking in the neighborhood. As part of the Master Development Plan review process, the applicant said that the parking garage entrance off of Fore Street (at the foot of Watervllle St.) would only be used by residents who would be accessing assigned parking spaces. The parking levels within the parking garage were not to be connected for purposes of ordinary circulation from the top level to the lower levels.

Now the applicant seems to be proposing a major change, with the Fore Street driveway to be used to access the entire parking structure. That is inconsistent with the prior representation. It would redirect traffic from Thames Street (where we were assured that the bulk of the traffic would be directed to minimize impact on the neighborhood) to Fore Street. This is a major problem. It is even more of a problem when combined with the cumulative impacts of all of the other traffic from nearby developments.

I urge you to take a hard look at this change in the proposal. The limited access to one level for residents only was one of the few concessions that was made to minimizing the impacts of this massive development. Please don't let the applicant reverse this as well.

Regards,
Barbara Vestal

--
Barbara A. Vestal, Esq.
Chester & Vestal, PA
107 Congress Street
Portland, Maine 04101
(207) 772-7426 - phone
(207) 761-5822 - facsimile

This message is intended only for the use of the individual or entity to which it is addressed and may contain information that is privileged, confidential and exempt from disclosure under applicable law. If the reader of this message is not the intended recipient, you are hereby notified that any dissemination, distribution, or copying of this communication is strictly prohibited. If you have received this message in error, please notify us immediately by telephone and e-mail.

Google Groups

Planning Board Workshop on 58 Fore Street

Sally Oldham <oldhamseg@gmail.com> Dec 5, 2019 11:13 AM
Posted in group: **Planning Board**

Dear Chair Dundon and Members of the Planning Board,

I would like to offer comments on the 58 Fore Street submission for a workshop review on December 10, 2019. In actions taken in 2015 and 2016 the Planning Board endorsed the offer of a public access easement 50' wide in return for the demolition of Building 1, the Erecting Shop of the Portland Company. Building 1 had been approved by the Historic Preservation Board as a contributing property in the Portland Company Historic District. The City Council accepted this recommendation based on the development team's vision of a gracious and expansive pedestrian entrance across the 50' easement extending from Fore Street to the plaza and the promise of clear views for the public from Fore Street to the waterfront and beyond.

The design before you does not meet the intent of the public easement or the promise of the original renderings for this entrance. The December 15, 2016 planning staff Design Review Report identified several design parameters to be used as guidance for future site plan applications. One of eight parameters identified addresses the public access easement design. It states:

"Design of the public easement entrance on Fore Street shall be revised to provide accessibility and increased viewing opportunities in that location, as well
as enhanced stretscape treatment for the public to appreciate and experience the historic building complex and the waterfront."

The Historic Preservation Board held a workshop on Wednesday, December 4. There was strong sentiment among Board members that significant revisions are needed to the Fore Street pedestrian entrance design. Among their comments about the stair design were these: "the entire width (of this entrance) needs to feel more of an entirety", there "needs to be a grander feature," the design needs to be "more gracious," there needs to be a "more gracious sequence" here, the "great opportunity" here is not being realized, the proposed plantings feel "like an afterthought." Clearly a narrow 14' wide stair that extends vertically at an angle quite unrelated to the sweep of the facades of the historic buildings 24, 2 and 6 does not meet the expectation of the City Council in their accepting the easement based its promised public benefits of broad access and visibility from Fore Street to the waterfront. The grove of trees proposed close to Building 6 also would appear to impact the visibility from Fore Street through the complex to the water.

At the neighborhood meeting held by the 58 Fore Street development team on Monday, November 25, there were many comments asking about accessibility from Fore Street to the plaza. It is an important expectation of neighbors that ADA accessibility be provided at this location. During the Master Plan review for this overall project the Historic Preservation Board discussed the possiblity of having an accessible elevator in Building 24. This would seem to be an idea worth pursuing.

Thank you for taking my comments into consideration as you review this project.

Sincerely,
Sally Oldham
118 Congress Street #202
Portland ME 04101

PORTLAND FORESIDE DEVELOPMENT COMPANY

PORTLAND FORESIDE - PHASE I
58 FORE STREET
PORTLAND, ME

W&C PROJECT NO. 227007

NOVEMBER 8, 2019

SITE PLAN APPLICATION SUBMISSION

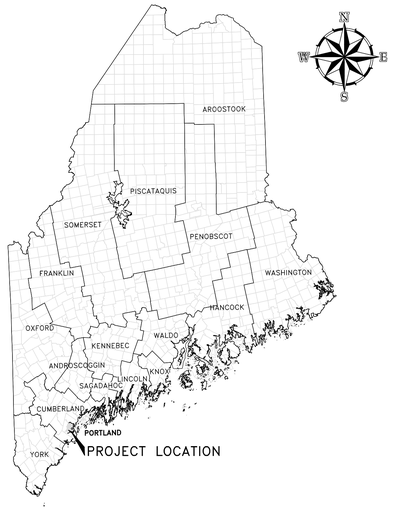

PROJECT LOCATION MAP

50 0 50 100
scale mile

STATE OF MAINE
LAUREN JANE SWETT
No. 12284
LICENSED PROFESSIONAL ENGINEER

WOODARD & CURRAN

41 Hutchins Drive | Portland, Maine 04102
800.426.4262 | www.woodardcurran.com

COMMITMENT & INTEGRITY DRIVE RESULTS



SOURCE: USGS TOPOGRAPHIC MAP

SITE LOCATION MAP

1/2 0 1/2 1
scale mile

2000 0 2000 4000
scale feet

\\woodardcurran.net\shared\Projects\0227007.07 PFDC - 58 Fore Block 1\wip\Drawings\Phase 1 - Site Plan Submission\0227007 Phase 1 Cover.dwg, Nov 08, 2019 - 1:50pm

GENERAL NOTES

1. SITE AND TOPOGRAPHIC DATA TAKEN FROM PLAN ENTITLED "EXISTING CONDITIONS AT 58 FORE STREET, PORTLAND, MAINE" PREPARED BY OWEN HASKELL, INC. DATED 2/26/2019.
2. VERTICAL DATUM IS REFERENCED TO CITY DATUM WITH ONE FOOT CONTOUR INTERVALS. CITY DATUM IS +0.02 FT NGVD 1929. HORIZONTAL DATUM IS REFERENCED TO STATE PLANE NAD 1983 (FEET), MAINE WEST ZONE.
3. THE ENTIRE SITE SHALL BE DEVELOPED AND/OR MAINTAINED AS DEPICTED ON THE SITE PLAN. APPROVAL OF THE PLANNING AUTHORITY OR PLANNING BOARD SHALL BE REQUIRED FOR ANY ALTERATION TO OR DEVIATION FROM THE APPROVED SITE PLAN, INCLUDING, WITHOUT LIMITATION: TOPOGRAPHY, DRAINAGE, LANDSCAPING, RETENTION OF WOODED OR LAWN AREAS, ACCESS, SIZE, LOCATION, AND SURFACING OF PARKING AREAS, AND LOCATION AND SIZE OF BUILDINGS.
4. THE CONTRACTOR SHALL CALL "DIG SAFE" AT 811 AT LEAST 72 HOURS PRIOR TO EXCAVATION IN ACCORDANCE WITH LOCAL, STATE AND FEDERAL SAFETY CODES.
5. PROPERLY PROTECT AND DO NOT DISTURB PROPERTY IRONS AND MONUMENTS. IF DISTURBED, THE PROPERTY MONUMENT SHALL BE RESET AT THE CONTRACTOR'S EXPENSE BY A LICENSED LAND SURVEYOR ACCEPTABLE TO THE CITY. PROPERTY MONUMENTS SHALL BE RESET IN ACCORDANCE WITH CITY OF PORTLAND STANDARDS.
6. DO NOT PARK, IMPEDE ACCESS TO, OR STORE EQUIPMENT ON ADJACENT CITY OR PRIVATELY OWNED LOTS, UNLESS PERMISSION HAS BEEN GRANTED IN ADVANCE IN WRITING BY CITY AND/OR LAND OWNER.
7. PRIOR TO CONSTRUCTION, A PRECONSTRUCTION MEETING SHALL BE HELD AT THE PROJECT SITE WITH THE CONTRACTOR, ENGINEER, CITY OF PORTLAND DEVELOPMENT REVIEW COORDINATOR, CITY OF PORTLAND DEPARTMENT OF PUBLIC WORKS REPRESENTATIVE, AND OWNER TO REVIEW THE CONSTRUCTION SCHEDULE AND CRITICAL ASPECTS OF THE SITE WORK. AT THAT TIME, THE SITE/BUILDING CONTRACTOR SHALL PROVIDE THREE (3) COPIES OF A DETAILED CONSTRUCTION SCHEDULE TO THE ATTENDING CITY REPRESENTATIVE. IT SHALL BE THE CONTRACTOR'S RESPONSIBILITY TO ARRANGE A MUTUALLY AGREEABLE TIME FOR THE PRECONSTRUCTION MEETING.
8. CONTRACTOR SHALL BE RESPONSIBLE FOR ALL RELOCATIONS THAT CONFLICT WITH THE PROPOSED IMPROVEMENTS SHOWN ON THE SITE DRAWINGS, INCLUDING BUT NOT LIMITED TO ALL UTILITIES, STORM INFRASTRUCTURE, SIGNS, UTILITY POLES, FENCES, ETC. AS REQUIRED. ALL WORK SHALL BE IN ACCORDANCE WITH THE GOVERNING AUTHORITY'S SPECIFICATIONS AND SHALL BE APPROVED BY SUCH. ALL COSTS SHALL BE INCURRED BY THE CONTRACTOR.
9. LAND OUTSIDE THE PROPOSED LIMIT OF WORK SHALL NOT BE DISTURBED BY THE CONTRACTOR. ANY LAND OUTSIDE LIMIT OF WORK DISTURBED BY CONTRACTOR SHALL BE RESTORED BY CONTRACTOR AT NO EXPENSE TO OWNER.
10. THE CONTRACTOR SHALL BE RESPONSIBLE FOR ESTABLISHING AND MAINTAINING ALL CONTROL POINTS AND BENCH MARKS NECESSARY FOR THE WORK.
11. THE CONTRACTOR SHALL COMPLY WITH ALL APPLICABLE LOCAL, STATE AND FEDERAL SAFETY CODES, REGULATIONS, LEGAL REQUIREMENTS, PERMIT CONDITIONS, ETC.
12. THE CONTRACTOR SHALL TAKE ADEQUATE PRECAUTIONS TO PROTECT ALL WALKWAYS, STREETS, PAVEMENTS, CURBING, TREES, PLANTINGS, LAWN, FENCING TO REMAIN ON OR OFF THE PREMISES, AND SHALL REPAIR AND REPLACE AT HIS/HER OWN EXPENSE, AS DIRECTED BY THE ENGINEER, ANY ITEMS DAMAGED AS A RESULT OF THE CONTRACTOR'S WORK.
13. THE CONTRACTOR SHALL PROVIDE ADEQUATE BRACING AND SHORING OF ALL EXCAVATIONS IN ACCORDANCE WITH THE REQUIREMENTS OF ALL GOVERNING CODES AND REGULATIONS.
14. SAWCUTS IN EXISTING PAVEMENT SHALL BE SMOOTH AND STRAIGHT. EXISTING PAVEMENT SHALL BE SAWCUT AND BUTTED TO THE NEW PAVEMENT. NO FEATHERING OF PAVEMENT WILL BE PERMITTED.
15. WORK WITHIN PUBLIC RIGHT–OF–WAY SHALL COMPLY WITH APPLICABLE CITY OF PORTLAND AND STATE REQUIREMENTS.
16. ALL CURB DAMAGED DURING CONSTRUCTION SHALL BE REPLACED IN KIND AND SHALL CONFORM TO CITY OF PORTLAND SPECIFICATIONS. COST IS INCIDENTAL TO CONTRACT.
17. ALL FULL DEPTH PAVEMENT REPLACEMENT SHALL BE CONSTRUCTED IN ACCORDANCE WITH THE CITY OF PORTLAND TECHNICAL STANDARDS.
18. ALL WORK WITHIN THE RIGHT OF WAY OF CITY STREETS SHALL BE PERFORMED IN ACCORDANCE WITH THE REQUIREMENTS OF THE CITY TRAFFIC ENGINEER. THE CONTRACTOR SHALL SUBMIT A PROPOSED TRAFFIC CONTROL PLAN TO THE TRAFFIC ENGINEER AT LEAST 7 DAYS BEFORE BEGINNING CONSTRUCTION IN ANY STREET. THE PROPOSED TRAFFIC CONTROL PLAN SHALL BE SUBJECT TO APPROVAL BY THE TRAFFIC ENGINEER, WHO MAY ATTACH SPECIAL CONDITIONS TO, OR REQUIRE MODIFICATIONS OF, THE TRAFFIC CONTROL PLAN. WORK SHALL NOT BEGIN UNTIL THE PLAN IS APPROVED BY THE TRAFFIC ENGINEER.
19. THE CONTRACTOR SHALL OBTAIN A CITY STREET OPENING PERMIT BEFORE BEGINNING CONSTRUCTION. THE CONTRACTOR WILL ALSO BE REQUIRED TO HAVE A CURRENT EXCAVATOR'S LICENSE IN THE CITY.
20. ALL WORK IN THE PUBLIC R.O.W. SHALL BE COMPLETED IN ACCORDANCE WITH THE CITY'S TECHNICAL MANUAL ARTICLES VI, VII, AND IX OF CHAPTER 25–STREETS, SIDEWALKS, AND OTHER PUBLIC PLACES OF THE CITY OF PORTLAND CODE OF ORDINANCES.
21. ALL SEWER CONSTRUCTION IN THE PUBLIC WAY SHALL BE COMPLETED IN ACCORDANCE WITH ARTICLE II OF CHAPTER 24–SEWERS OF THE CITY OF PORTLAND CODE OF ORDINANCES.
22. CONTACT CITY OF PORTLAND ARBORIST AND ENGINEER PRIOR TO CUTTING ROOTS, TRIMMING BRANCHES, OR DISTURBING TREES WITHIN THE R.O.W. THAT NOT HAVE BEEN NOTED FOR REMOVAL ON THE PLANS.
23. IF IMPORTED FILL MATERIAL IS REQUIRED, IT SHALL BE CERTIFIED IN WRITING BY CONTRACTOR AS NON–CONTAMINATED, CLEAN FILL SUITABLE FOR THE INTENDED USE. THE CONTRACTOR SHALL BE RESPONSIBLE FOR ALL TESTING OF ENVIRONMENTAL PARAMETERS AS OUTLINED IN THE PROJECT SPECIFICATIONS.
24. RESTORE ALL AREAS DISTURBED BY CONTRACTOR'S OPERATIONS TO ORIGINAL FINISH (GRAVEL, PAVEMENT, RIPRAP, GRASS, ETC.) UNLESS OTHERWISE NOTED ON PLANS. RESTORATION OF ALL AREAS DAMAGED BY CONTRACTOR SHALL BE INCIDENTAL TO THE PROJECT.
25. ALL MATERIAL SHALL BE FURNISHED BY CONTRACTOR UNLESS OTHERWISE NOTED.
26. CONTRACTOR IS RESPONSIBLE FOR FIELD VERIFICATION OF ALL DIMENSIONS PRIOR TO START OF CONSTRUCTION.
27. RESTRICT ACCESS TO SITE THROUGH THE USE OF APPROPRIATE SIGNAGE, BARRIERS, FENCES, ETC. SITE SHALL BE LEFT WITH APPROPRIATE SAFETY MEASURES IN PLACE DURING NON–WORKING HOURS. NO TRENCH SHALL BE LEFT OPEN DURING NON–WORKING HOURS. SITE SAFETY IS THE RESPONSIBILITY OF CONTRACTOR, DURING BOTH WORKING AND NON–WORKING HOURS.
28. CONTRACTOR IS RESPONSIBLE FOR OBTAINING ALL NECESSARY CONSTRUCTION PERMITS. PERMIT APPLICATIONS SHALL BE SUBMITTED WITH ADEQUATE TIME SO AS NOT TO DELAY CONSTRUCTION.
29. CONTRACTOR SHALL PROVIDE AND MAINTAIN EROSION AND SEDIMENTATION CONTROL MEASURES IN ACCORDANCE WITH THESE PLANS AND THE LATEST EDITION OF THE MAINE DEPARTMENT OF ENVIRONMENTAL PROTECTION'S BEST MANAGEMENT PRACTICES MANUAL. KEEP ALL STREETS FREE OF DUST, MUD, AND DEBRIS. STREETS AND WALKWAYS SHALL BE SWEPT REGULARLY, AND TEMPORARY CONSTRUCTION ENTRANCES SHALL BE UTILIZED DURING CONSTRUCTION.
30. CONTRACTOR IS REQUIRED TO PERFORM ALL WORK IN ACCORDANCE WITH REQUIREMENTS OUTLINED WITHIN THE MAINE CONSTRUCTION GENERAL PERMIT. CONTRACTOR SHALL FILE A NOTICE OF TERMINATION WITH PHOTOGRAPHS AND REQUIRED ATTACHMENTS TO THE MAINE DEPARTMENT OF ENVIRONMENTAL PROTECTION UPON COMPLETION OF THE PROJECT. A DRAFT OF THE NOTICE WILL BE PROVIDED TO THE OWNER AND THE OWNER'S REPRESENTATIVE FOR REVIEW PRIOR TO SUBMISSION. A COPY OF THE NOTICE CAN BE OBTAINED AT WWW.MAINE.GOV/DEP/LAND/STORMWATER/CONSTRUCTION.HTML.
31. CONTRACTOR SHALL MAINTAIN EROSION CONTROL AND STORMWATER POLLUTION PREVENTION SYSTEMS IN COMPLIANCE WITH THE REQUIREMENTS OF THE MAINE CONSTRUCTION GENERAL PERMIT (MCGP). CONTRACTOR SHALL CONDUCT AND MAINTAIN RECORDS OF EROSION CONTROL INSPECTIONS PER THE NOTICE OF INTENT TO COMPLY WITH THE MAINE CONSTRUCTION GENERAL PERMIT. CONTRACTOR SHALL PREPARE AND SUBMIT A NOTICE OF TERMINATION TO THE MAINE DEPARTMENT OF ENVIRONMENTAL PROTECTION, UPON COMPLETION OF THE CONSTRUCTION PROJECT. SUBMIT A COPY OF THE INSPECTION RECORDS AND THE NOTICE OF TERMINATION TO THE OWNER AND ARCHITECT.
32. THE UTILITY LOCATIONS SHOWN IN PLAN AND PROFILE ARE APPROXIMATE AND REQUIRE FIELD VERIFICATION BY THE CONTRACTOR. CONTACT THE ENGINEER AND OWNER IMMEDIATELY UPON DISCOVERING ANY CONFLICTS WITH EXISTING AND PROPOSED UTILITY LOCATIONS. NOT ALL EXISTING UTILITIES ARE SHOWN ON PLANS.
33. CONTRACTOR SHALL CLEAN AND/OR FLUSH ALL MANHOLES, CATCH BASINS, AND ASSOCIATED PIPING AFTER THE WORK HAS BEEN COMPLETED.
34. CONTRACTOR SHALL COORDINATE CONSTRUCTION ACTIVITY WITH UTILITY COMPANIES, EMERGENCY SERVICES AND CITY. NOTIFY UTILITY COMPANIES WITHIN 48 HOURS OF WORK ACTIVITY ADJACENT TO THOSE UTILITIES.
35. CONTRACTOR SHALL SEQUENCE THE WORK SO AS TO MAINTAIN UTILITY SERVICES FOR EXISTING OPERATIONS ON AND ADJACENT TO THE SITE. CONTRACTOR SHALL PROVIDE A PLAN FOR TEMPORARY UTILITY SERVICES OR AS REQUIRED. THE PLAN SHALL BE STAMPED BY A PROFESSIONAL ENGINEER AND SUBMITTED TO OWNER. ENGINEER AND UTILITY FOR ACCEPTANCE A MINIMUM OF 14 DAYS PRIOR TO START OF UTILITY WORK.
36. EXISTING FACILITIES (I.E. SIGNS, POLES, LIGHT POSTS, ETC.) SHALL BE REMOVED AND PROTECTED DURING CONSTRUCTION. OWNER RETAINS RIGHT TO KEEP ANY AND ALL REMOVED FACILITIES. CONTRACTOR SHALL DISPOSE OF ANY REMOVED FACILITY AT THE REQUEST OF CITY AT CONTRACTOR'S EXPENSE.
37. ALL TREES NOT NOTED TO BE REMOVED OR RELOCATED SHALL BE PROTECTED BY CONTRACTOR DURING CONSTRUCTION.
38. A COMPLETE SET OF "RECORD" DRAWINGS THAT REFLECT ANY AND ALL MODIFICATIONS TO THE SANITARY SEWER SYSTEM, STORM SEWER SYSTEM AND ANY OTHER UTILITY INSTALLATIONS OR ALTERATIONS WITHIN THE PROJECT LIMITS SHALL BE SUBMITTED TO THE CITY OF PORTLAND. THESE DRAWINGS SHALL BE SUBMITTED IN BOTH DIGITAL (ACAD) AND HARD COPY FORMAT AS DEFINED IN THE SPECIFICATIONS PRIOR TO PAYMENT OF FINAL RETAINAGE.
39. ALL UTILITY SERVICES AND MAINS ARE APPROXIMATE AS SHOWN. CONTRACTOR SHALL FIELD VERIFY LOCATION OF EXISTING SERVICES AND MAINS AND RELOCATE AS REQUIRED TO COMPLETE WORK. CONTRACTOR SHALL COORDINATE WORK WITH THE CITY OF PORTLAND, PORTLAND WATER DISTRICT, UNITIL, CMP, AND ANY OTHER UTILITY OWNERS AND PROPERTY OWNERS.
40. WORK IS PROPOSED IN CLOSE PROXIMITY TO EXISTING UTILITIES. CONTRACTOR SHALL PROTECT EXISTING UTILITIES DURING CONSTRUCTION. CONTRACTOR SHALL SUBMIT PROTECTION PLAN FOR CROSSING 33" SANITARY SEWER FORCE MAIN, STAMPED BY PROFESSIONAL ENGINEER PRIOR TO START OF WORK.
41. CAPPED PIPE STUB LOCATIONS SHALL BE MARKED WITH EMBEDDED STAKE AND A MINIMUM OF THREE TIES SHALL BE RECORDED. EMBEDDED STAKE SHALL BE 2X4 WITH PK NAIL DRIVEN IN TOP, LENGTH AS REQUIRED TO SPAN FROM TOP OF PIPE TO 6" BELOW GRADE. LOCATION AND ELEVATION OF PIPE STUB SHALL BE PROVIDED. WARNING TAPE AND WIRE SHALL BE INSTALLED OVER PIPE STUBS IN ACCORDANCE WITH SPECIFICATIONS.
42. ALL SIGNAGE SHALL CONFORM WITH MANUAL ON UNIFORM TRAFFIC CONTROL DEVICES (MUTCD)
43. ACTIVITIES THAT HAVE THE POTENTIAL TO DISTURB SOIL SUCH AS UTILITY AND SUBSURFACE STRUCTURE INSTALLATION/RELOCATION WORK, FOUNDATION INSTALLATION, GRADING, PAVING, AND LANDSCAPING SHALL BE CONDUCTED IN ACCORDANCE WITH THE FEBRUARY 28, 2019, SOIL MANAGEMENT PLAN FOR PORTLAND FORESIDE BLOCK 1. APPLICABLE SOIL MANAGEMENT PROCEDURES INCLUDE SITE CONTROLS AND CONSTRUCTION MEASURES TO REDUCE EXPOSURE TO SOIL DURING CONSTRUCTION, AS WELL AS TO FACILITATE THE PROPER HANDLING, STORAGE, CHARACTERIZATION, TRANSPORT, ONSITE REUSE, AND/OR OFFSITE REUSE, OR DISPOSAL, OF EXCESS SOIL THAT MAY BE GENERATED DURING CONSTRUCTION.

LEGEND

EXISTING		PROPOSED
	CONTOUR (1' INTERVAL)	
	CONTOUR (INDEX)	
S	SANITARY SEWER	S
FM	FORCEMAIN	FM
SD	STORM DRAIN	SD
UD	UNDERDRAIN	UD
W	WATER LINE	W
E	UNDERGROUND ELECTRIC	E
COMM	UNDERGROUND TELECOMMUNICATIONS	COMM
G	GAS LINE	G
OE	OVERHEAD ELECTRIC	
AS	ABANDONED SEWER	
AW	ABANDONED WATER LINE	
	PROPERTY LINE	
	RIGHT OF WAY	
	EASEMENT	
	EDGE OF VEGETATION	
	FENCE	
	CENTERLINE	
	RETAINING WALL	
	STONEWALL	
	CURB	
	EDGE OF PAVEMENT	
	EDGE OF GRAVEL	
	GUARDRAIL	
	RAILROAD TRACKS	
	DRAINAGE DITCH / SWALE	
	SEDIMENT BARRIER	
	LIMIT OF WORK	LW
	PAVER AREA	
	BRICK SIDEWALK	
	BITUMINOUS PAVEMENT	

LEGEND

EXISTING		PROPOSED
	SANITARY SEWER MANHOLE	
CO	CLEAN OUT	CO
	DRAINAGE MANHOLE	
	FIELD INLET CATCH BASIN	
	ELECTRICAL MANHOLE	EMH
	TELECOMMUNICATIONS MANHOLE	CMH
TELE BOX	TELEPHONE STAND BOX	
	GAS METER BOX	
	GAS VENT	
	GAS GATE	
	TRANSFORMER	TRANS.
	UTILITY POLE	
	UTILITY POLE WITH GUY	
	LIGHTPOST	
	WATER GATE	
	CURB STOP	
	REDUCER	
	COUPLING	
WSO	WATER SHUT OFF VALVE	WSO
	HYDRANT	
	WATER METER BOX	
	THRUST BLOCK	
	PROPERTY MONUMENT	
MB	MAIL BOX	
	STREET AND MISCELLANEOUS SIGNS	
FP	FLAGPOLE	
XXX.XX	SPOT ELEVATION	XXX.XX
	TREE/SHRUB	
TP–#	TEST PIT	

ABBREVIATIONS

&	AND	N.I.C.	NOT IN CONTRACT
A.G.	ABOVE GROUND	NO.	NUMBER
		NR	NO REFUSAL
BC	BOTTOM OF CURB	N.T.S.	NOT TO SCALE
BIT	BITUMINOUS		
BW	BOTTOM OF WALL	OE	OVERHEAD ELECTRIC
B/W	BETWEEN	OH	OVERHEAD
CB	CATCH BASIN	±	PLUS OR MINUS
CI	CAST IRON	LLS	LICENSED LAND SURVEYOR
CMP	CENTRAL MAINE POWER	PROP.	PROPOSED
CMP	CORRUGATED METAL PIPE	PT.	POINT
CONC	CONCRETE	PVC	POLYVINYL CHLORIDE
DI	DUCTILE IRON	R.O.W.	RIGHT–OF–WAY
DIA.	DIAMETER	RCP	REINFORCED CONCRETE PIPE
DMH	DRAIN MANHOLE	REINF.	REINFORCED
DTL.	DETAIL	REQ'D	REQUIRED
E	UNDERGROUND ELECTRICAL	S	SLOPE (FT./FT.)
EL.	ELEVATION	S	SEWER
E.O.P.	EDGE OF PAVEMENT	SD	STORM DRAIN
EXIST.	EXISTING	SMH	SEWER MANHOLE
		SCH	SCHEDULE
FF	FINISH FLOOR	STA.	STATION
FM	FORCEMAIN		
FT	FOOT/FEET	TS	TOP OF STAIRS
		TW	TOP OF WALL
G	GAS MAIN	TYP.	TYPICAL
GS	GAS SERVICE		
GALV.	GALVANIZED	UP	UTILITY POLE
GRAN.	GRANITE		
		VC	VITRIFIED CLAY
HDPE	HIGH DENSITY POLYETHYLENE	VIT.	VITRIFIED CLAY
HYD	HYDRANT		
		W	WEST
INV.	INVERT	W	WATER
		W/	WITH
LF	LINEAR FEET	W	WATERMAIN
		WS	WATER SERVICE
MAX.	MAXIMUM	WV	WATER VALVE
MDOT	MAINE DEPARTMENT OF TRANSPORTATION		
MIN.	MINIMUM		
MON	MONUMENT		

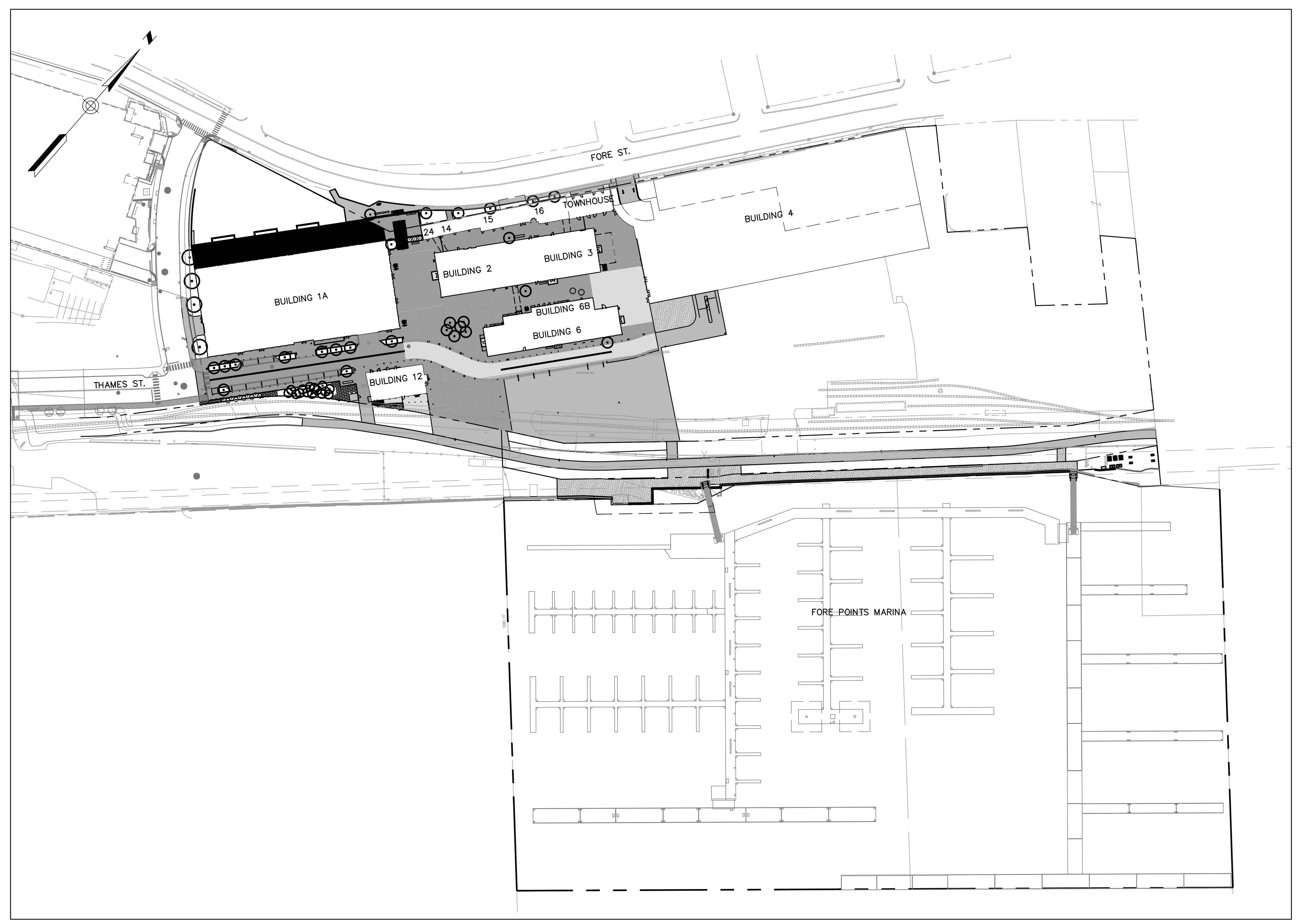

KEY PLAN
SCALE: 1=100'

WOODARD & CURRAN
41 Hutchins Drive
Portland, Maine 04102
800.426.4262 | www.woodardcurran.com
COMMITMENT & INTEGRITY DRIVE RESULTS

THIS DOCUMENT IS THE PROPERTY OF WOODARD & CURRAN INC. AND ITS CLIENT. REPRODUCTION OR MODIFICATION WITHOUT WRITTEN PERMISSION IS PROHIBITED.

STATE OF MAINE
LAUREN JANE SWETT
No. 12284
LICENSED PROFESSIONAL ENGINEER

REV	DESCRIPTION	DATE

0227007 PHASE 1 SITE PL*.dwg
CHECKED BY: DLC

REV	DESCRIPTION	DATE

DESIGNED BY: LJS
DRAWN BY: BCM

GENERAL NOTES, LEGEND & ABBREVIATIONS

PORTLAND FORESIDE DEVELOPMENT CO.
PORTLAND, ME 04102

PHASE 1 SITE PLAN SUBMISSION

JOB NO.: 0227007
DATE: NOVEMBER 2019
SCALE: AS NOTED
SHEET: 1 OF 17

NOT FOR CONSTRUCTION

G-001

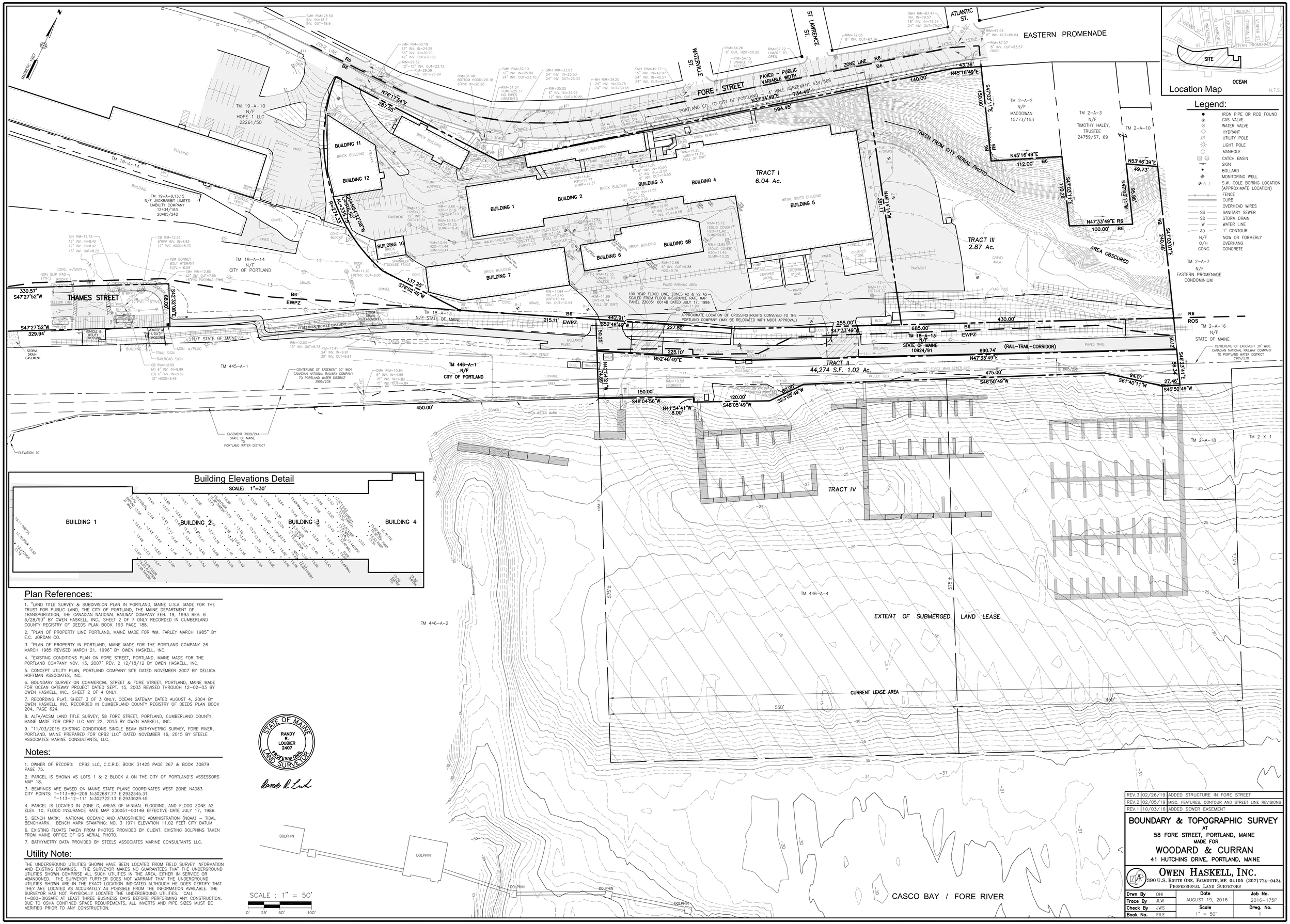

Location Map N.T.S.

Legend:

- IRON PIPE OR ROD FOUND
- GAS VALVE
- WATER VALVE
- HYDRANT
- UTILITY POLE
- LIGHT POLE
- MANHOLE
- CATCH BASIN
- SIGN
- BOLLARD
- MONITORING WELL
- B-2 S.W. COLE BORING LOCATION (APPROXIMATE LOCATION)
- FENCE
- CURB
- OVERHEAD WIRES
- SS SANITARY SEWER
- SD STORM DRAIN
- W WATER LINE
- 20 1' CONTOUR
- N/F NOW OR FORMERLY
- O/H OVERHANG
- CONC. CONCRETE

Building Elevations Detail

SCALE: 1"=30'

Plan References:

1. "LAND TITLE SURVEY & SUBDIVISION PLAN IN PORTLAND, MAINE U.S.A. MADE FOR THE TRUST FOR PUBLIC LAND, THE CITY OF PORTLAND, THE MAINE DEPARTMENT OF TRANSPORTATION, THE CANADIAN NATIONAL RAILWAY COMPANY FEB. 19, 1993 REV. 6 6/28/93" BY OWEN HASKELL, INC., SHEET 2 OF 7 ONLY RECORDED IN CUMBERLAND COUNTY REGISTRY OF DEEDS PLAN BOOK 193 PAGE 188.
2. "PLAN OF PROPERTY LINE PORTLAND, MAINE MADE FOR WM. FARLEY MARCH 1985" BY E.C. JORDAN CO.
3. "PLAN OF PROPERTY IN PORTLAND, MAINE MADE FOR THE PORTLAND COMPANY 26 MARCH 1985 REVISED MARCH 21, 1996" BY OWEN HASKELL, INC.
4. "EXISTING CONDITIONS PLAN ON FORE STREET, PORTLAND, MAINE MADE FOR THE PORTLAND COMPANY NOV. 13, 2007" REV. 2 12/18/12 BY OWEN HASKELL, INC.
5. CONCEPT UTILITY PLAN, PORTLAND COMPANY SITE DATED NOVEMBER 2007 BY DELUCA HOFFMAN ASSOCIATES, INC.
6. BOUNDARY SURVEY ON COMMERCIAL STREET & FORE STREET, PORTLAND, MAINE MADE FOR OCEAN GATEWAY PROJECT DATED SEPT. 15, 2003 REVISED THROUGH 12-02-03 BY OWEN HASKELL, INC., SHEET 2 OF 4 ONLY.
7. RECORDING PLAT, SHEET 3 OF 3 ONLY, OCEAN GATEWAY DATED AUGUST 4, 2004 BY OWEN HASKELL, INC. RECORDED IN CUMBERLAND COUNTY REGISTRY OF DEEDS PLAN BOOK 204, PAGE 624.
8. ALTA/ACSM LAND TITLE SURVEY, 58 FORE STREET, PORTLAND, CUMBERLAND COUNTY, MAINE MADE FOR CPB2 LLC MAY 22, 2013 BY OWEN HASKELL, INC.
9. "11/03/2015 EXISTING CONDITIONS SINGLE BEAM BATHYMETRIC SURVEY, FORE RIVER, PORTLAND, MAINE PREPARED FOR CPB2 LLC" DATED NOVEMBER 16, 2015 BY STEELE ASSOCIATES MARINE CONSULTANTS, LLC.

Notes:

1. OWNER OF RECORD: CPB2 LLC, C.C.R.D. BOOK 31425 PAGE 267 & BOOK 30879 PAGE 75.
2. PARCEL IS SHOWN AS LOTS 1 & 2 BLOCK A ON THE CITY OF PORTLAND'S ASSESSORS MAP 18.
3. BEARINGS ARE BASED ON MAINE STATE PLANE COORDINATES WEST ZONE NAD83. CITY POINTS: T-113-80-206 N:302687.77 E:2932345.31 T-113-12-111 N:302722.13 E:2933029.45
4. PARCEL IS LOCATED IN ZONE C, AREAS OF MINIMAL FLOODING, AND FLOOD ZONE A2 ELEV. 10, FLOOD INSURANCE RATE MAP 230051-0014B EFFECTIVE DATE JULY 17, 1986.
5. BENCH MARK: NATIONAL OCEANIC AND ATMOSPHERIC ADMINISTRATION (NOAA) – TIDAL BENCHMARK. BENCH MARK STAMPING: NO. 3 1971 ELEVATION 11.02 FEET CITY DATUM.
6. EXISTING FLOATS TAKEN FROM PHOTOS PROVIDED BY CLIENT. EXISTING DOLPHINS TAKEN FROM MAINE OFFICE OF GIS AERIAL PHOTO.
7. BATHYMETRY DATA PROVIDED BY STEELS ASSOCIATES MARINE CONSULTANTS LLC.

Utility Note:

THE UNDERGROUND UTILITIES SHOWN HAVE BEEN LOCATED FROM FIELD SURVEY INFORMATION AND EXISTING DRAWINGS. THE SURVEYOR MAKES NO GUARANTEES THAT THE UNDERGROUND UTILITIES SHOWN COMPRISE ALL SUCH UTILITIES IN THE AREA, EITHER IN SERVICE OR ABANDONED. THE SURVEYOR FURTHER DOES NOT WARRANT THAT THE UNDERGROUND UTILITIES SHOWN ARE IN THE EXACT LOCATION INDICATED ALTHOUGH HE DOES CERTIFY THAT THEY ARE LOCATED AS ACCURATELY AS POSSIBLE FROM THE INFORMATION AVAILABLE. THE SURVEYOR HAS NOT PHYSICALLY LOCATED THE UNDERGROUND UTILITIES. CALL 1-800-DIGSAFE AT LEAST THREE BUSINESS DAYS BEFORE PERFORMING ANY CONSTRUCTION. DUE TO OSHA CONFINED SPACE REQUIREMENTS, ALL INVERTS AND PIPE SIZES MUST BE VERIFIED PRIOR TO ANY CONSTRUCTION.

STATE OF MAINE
RANDY R. LOUBIER 2407
PROFESSIONAL LAND SURVEYOR

REV.3	02/26/19	ADDED STRUCTURE IN FORE STREET
REV.2	02/05/19	MISC. FEATURES, CONTOUR AND STREET LINE REVISIONS
REV.1	10/03/16	ADDED SEWER EASEMENT

BOUNDARY & TOPOGRAPHIC SURVEY

AT

58 FORE STREET, PORTLAND, MAINE

MADE FOR

WOODARD & CURRAN

41 HUTCHINS DRIVE, PORTLAND, MAINE

OWEN HASKELL, INC.
390 U.S. ROUTE ONE, FALMOUTH, ME 04105 (207) 774-0424
PROFESSIONAL LAND SURVEYORS

Drwn By	OHI	Date	Job No.
Trace By	JLW	AUGUST 19, 2016	2016-175P
Check By	JWS	Scale	Drwg. No.
Book No.	FILE	1" = 50'	1

T:\2016\2016-175 Fore St Portland\2016-175P EX CON REV 02-05-19.dwg, 2/26/2019 12:08:29 PM, CutePDF Writer

41 Hutchins Drive
Portland, Maine 04102
800.426.4262 | www.woodardcurran.com
COMMITMENT & INTEGRITY DRIVE RESULTS

THIS DOCUMENT IS THE PROPERTY OF WOODARD & CURRAN INC. AND HIS CLIENT. DISCLOSURE OR REPRODUCTION IS NOT PERMITTED WITHOUT THE EXPRESS CONSENT OF WOODARD & CURRAN INC.

STATE OF MAINE
LAUREN JANET SMETT
No. 12284
REGISTERED PROFESSIONAL ENGINEER

Lauren Smett

REV	DESCRIPTION	DATE
	07/07 PMS 1:38.1 Scale	
	CHECKED BY: DLC	

REV	DESCRIPTION	DATE
	DRAWN BY: BDM	
	DESIGNED BY: LJS	

EXISTING CONDITIONS

PORTLAND FORESIDE DEVELOPMENT CO.
PORTLAND, ME 04102

PHASE 1 SITE PLAN SUBMISSION

JOB NO.:	0227007
DATE:	NOVEMBER 2019
SCALE:	1"=20'
SHEET:	2 OF 17

C-001

BAR SCALE
1" = 20'
CHECK GRAPHIC SCALE BEFORE USING

NOT FOR CONSTRUCTION

MATCHLINE – SEE SHEET C-002

WATERVILLE STREET

FORE STREET

FORE CONNECTOR

FORE CONNECTOR CURRENTLY UNDER CONSTRUCTION. CONTRACTOR TO CONFIRM EXISTING CONDITIONS PRIOR TO START OF CONSTRUCTION

THAMES STREET EXT.

PORTLAND COMPANY HISTORIC DISTRICT BOUNDARY

B6 EWPZ

ZONE LINE R6 B6

250' SHORELAND ZONE

75' SHORELAND ZONE

PROPOSED WATERFRONT R.O.W.

100 YEAR FLOOD LINE, ZONE V2 (EL 13) AS SCALED FROM FLOOD INSURANCE RATE MAP PANEL 230051 0014B DATED JULY 17, 1986

N/F CPB2
31425/267
30879/75
35264/286

N/F PF MARINA
34869/50

BUILDING 2
BUILDING 3
BUILDING 4
BUILDING 6
BUILDING 6B
BLDG 16
BLDG 24

J:\woodardcurran.net\shared\Projects\0227007.07 PFDC – 58 Fore Block 1\wip\Drawings\Phase 1 – Site Plan Submission\0227007 Phase 1 Site Plan.dwg, Nov 08, 2019 – 1:57pm

42x30 SHEET
1:1

MATCHLINE – SEE SHEET C-001

FORE STREET

ZONE LINE

R6
B6

TM 2-A-2
N/F
MACCOWAN
15773/153

TM 2-A-3
N/F
TIMOTHY HALEY,
TRUSTEE
24759/67, 69

TM 2-A-10

N/F CPB2
31425/267
30879/75
35264/286

BUILDING 5

BUILDING 4

250' SHORELAND ZONE

AREA OBSCURED

WOOD DECK

CONC. RAMP

PUMP STATION

CRUSHED STONE

PAVED

PAVED WALK

LPG

100 YEAR FLOOD LINE, ZONE A2 (EL 10) AS SCALED FROM FLOOD INSURANCE RATE MAP PANEL 230051 0014B DATED JULY 17, 1986

75' SHORELAND ZONE

B6
EWPZ

100 YEAR FLOOD LINE, ZONE V2 (EL 13) AS SCALED FROM FLOOD INSURANCE RATE MAP PANEL 230051 0014B DATED JULY 17, 1986

PROPOSED MDOT R.O.W.

APPROX. LOCATION 33" FORCE MAIN SEWER LINE

FWD EASEMENT

BF MARINA

N/F PF MARINA
34869/50

MDP1A

MDP1MID

MDP1B

255.00'
S47°33'52"W

685.00'

690.74'
N47°33'52"E

430.00'

N47°33'52"E
100.00'

N42°26'08"W
49.73'

N47°33'52"E
172.80'

S42°26'08"E
24.48'

S47°50'52"W
120.00'

S47°50'52"W
176.00'

S47°50'52"W

20' 0 20' 40'
BAR SCALE
1" = 20'
CHECK GRAPHIC SCALE BEFORE USING

NOT FOR CONSTRUCTION

41 Hutchins Drive
Portland, Maine 04102
800.426.4262 | www.woodardcurran.com

COMMITMENT & INTEGRITY DRIVE RESULTS

THIS DOCUMENT IS THE PROPERTY OF WOODARD & CURRAN INC. AND ITS CLIENT. DISCLOSURE OR REPRODUCTION WITHOUT PERMISSION IS PROHIBITED.

STATE OF MAINE
LAUREN JANET SMETT
No. 12284
REGISTERED PROFESSIONAL ENGINEER

Lauren Smett

REV	DESCRIPTION	DATE
	07/07 PAGE 1 OF 1 Cmp	

REV	DESCRIPTION	DATE
DESIGNED BY: LJS	DRAWN BY: BDM	

EXISTING CONDITIONS

PORTLAND FORESIDE
DEVELOPMENT CO
PORTLAND, ME 04102

PHASE 1 SITE PLAN SUBMISSION

JOB NO.: 0227007
DATE: NOVEMBER 2019
SCALE: 1"=20'
SHEET: 3 OF 17

C-002

\\woodardcurran.net\shared\Projects\0227007.07 PFDC - 58 Fore Block 1\wip\Drawings\Phase 1 - Site Plan Submission\0227007 Phase 1 Site Plan.dwg, Nov 08, 2019 - 1:38pm

41 Hutchins Drive
Portland, Maine 04102
800.426.4262 | www.woodardcurran.com
COMMITMENT & INTEGRITY DRIVE RESULTS

THIS DOCUMENT IS THE PROPERTY OF WOODARD & CURRAN INC., AND ITS CLIENT. DISCLOSURE OR REPRODUCTION IN WHOLE OR IN PART WITHOUT THE EXPRESS WRITTEN PERMISSION OF WOODARD & CURRAN INC. IS PROHIBITED.

STATE OF MAINE
LAUREN JANET SMETT
No. 12284
REGISTERED PROFESSIONAL ENGINEER

Lauren Smett

REV	DESCRIPTION	DATE
	07007 PHASE 1 SITE PLAN SUBMISSION	

CHECKED BY: DJC

REV	DESCRIPTION	DATE

DESIGNED BY: LJS DRAWN BY: BDM

DEMOLITION PLAN - 1

PORTLAND FORESIDE DEVELOPMENT CO
PORTLAND, ME 04102

PHASE 1 SITE PLAN SUBMISSION

JOB NO.: 0227007
DATE: NOVEMBER 2019
SCALE: 1"=20'
SHEET: 4 OF 17

C-003

MATCHLINE – SEE SHEET C-004

MATCHLINE – SEE SHEET C-004

FORE CONNECTOR

FORE STREET

WATERVILLE STREET

THAMES STREET EXT.

DEMOLISH SIGN
DEMOLISH FM
DEMOLISH OHW TO UTILITY POLE
DEMOLISH WOODEN DECKING
CATCH BASIN INLET PROTECTION, TYP.
PROTECT & MAINTAIN USE OF MARINA WATER & ASSOCIATED STRUCTURES DURING CONSTRUCTION
DEMOLISH EXISTING OVERHEAD ELECTRIC & UP
PROTECT EXISTING RETAINING WALL, REFER TO STRUCTURAL PLANS
PROTECT EXISTING GAS
DEMOLISH BRICK REMAINS
RELOCATED UP #8 SEE SHT. C-102
DEMOLISH METAL STEPS
DEMOLISH CATCH BASIN
DEMOLISH DRAIN
DEMOLISH STONE RETAINING WALL
DEMOLISH WATER
DEMOLISH SEWER PUMP STATION
DEMOLISH BUILDING 4
DEMOLISH CATCH BASINS
DEMOLISH STRUCTURE
DEMOLISH SPRINKLER & WATER
DEMOLISH ELECTRIC
DEMOLISH WATER LINE & HYDRANT
DEMOLISH SPRINKLER
DEMOLISH 18" SD & CATCH BASIN
CB RIM=11.20
18"INV. OUT=8.00
DEMOLISH FENCE
RELOCATE CONCRETE BLOCKS ON SITE
REMOVE EXISTING RIPRAP
REMOVE EXISTING GUARDRAIL (IF INSTALLED AT TIME OF CONSTRUCTION)
STABILIZED CONSTRUCTION ENTRANCE
CAP SD AT PL
RELOCATION OF MNGRR SIDING
PROTECT & MAINTAIN USE OF EXISTING MARINA WATER DURING CONSTRUCTION
PROTECT & MAINTAIN USE OF MARINA WATER DURING CONSTRUCTION
DEMOLISH EXISTING RAILROAD TRACKS
DEMOLISH EXISTING PUMP STATION
PROTECT EXISTING FUEL LINES
PROTECT EXISTING MARINA WATER
PROTECT EXISTING UG FUEL TANKS FUEL LINES
SEDIMENT BARRIER, TYP.
PROVIDE CB INLET PROTECTION, TYP.
PROVIDE MASONRY PLUGS ON REMAINING DOWNSTREAM PIPES PRIOR TO DEMOLISHING UPSTREAM SD PIPING
BUILDING 2
BUILDING 3
BUILDING 6
BUILDING 6B
BLDG 16
BLDG 24
PAVEMENT
GRAVEL
ROCK
CONC. BLOCKS
B6 EWPZ
ZONE LINE
75' SHORELAND ZONE
100 YEAR FLOOD LINE, ZONE V2 (EL 13) AS SCALED FROM FLOOD INSURANCE RATE MAP PANEL 230051 0014B DATED JULY 17, 1986

DEMOLITION NOTES:

1. SEQUENCE OF WORK WILL FOLLOW THE CONSTRUCTION MANAGEMENT PLAN. DEMOLITION ACTIVITIES SHALL BE SEQUENCED TO ENSURE AREAS OF THE SITE SHALL REMAIN OPERATIONAL DURING CONSTRUCTION.
2. PRIOR TO THE START OF DEMOLITION, THE CONTRACTOR SHALL OBTAIN ALL NECESSARY PERMITS AND/OR APPROVALS FROM THE CITY OF PORTLAND, AND ALL OTHER AUTHORITIES HAVING JURISDICTION.
3. THE WORD "DEMOLISH" SHALL IMPLY THE FULL REMOVAL AND PROPER DISPOSAL OF THE ITEM AND ANY APPURTENANT ITEMS, AS NOTED, OR AS DIRECTED BY THE OWNER OR THEIR REPRESENTATIVE. THE OWNER RETAINS THE RIGHT TO KEEP ANY ITEM NOTED FOR REMOVAL OR DEMOLITION AT THE REQUEST OF THE OWNER OR THEIR REPRESENTATIVE.
4. CONSTRUCTION/DEMOLITION DEBRIS NOT APPROVED FOR REUSE ON-SITE, SHALL BE REMOVED AND DISPOSED OFF SITE IN ACCORDANCE WITH THE REQUIREMENTS OF ALL AUTHORITIES HAVING JURISDICTION. WASTE MANIFEST FORMS DOCUMENTING PROPER OFF-SITE DISPOSAL SHALL BE MADE AVAILABLE TO THE SITE/CIVIL ENGINEER AND THE CITY OF PORTLAND UPON REQUEST.
5. PRIOR TO THE START OF DEMOLITION, THE CONTRACTOR SHALL VERIFY THE LOCATION OF EXISTING UTILITIES TO BE DEMOLISHED OR TO REMAIN PROTECTED DURING CONSTRUCTION. IF ANY DISCREPANCIES ARE FOUND, THE CONTRACTOR SHALL NOTIFY THE ENGINEER IN WRITING OF THE CONFLICT.
6. THE CONTRACTOR SHALL PROTECT ALL EXISTING UTILITIES TO REMAIN. ANY TEMPORARY SHUT DOWNS REQUIRED TO FACILITATE THE PROPOSED CONSTRUCTION, WHICH MAY AFFECT USES ON ADJACENT PROPERTIES SHALL BE COORDINATED BY THE CONTRACTOR, THE CITY OF PORTLAND AND APPLICABLE UTILITY.
7. CONTRACTOR SHALL REPAIR OR REPLACE ANY STRUCTURES OR UTILITIES DAMAGED DURING CONSTRUCTION. THE CONTRACTOR SHALL PROCEED WITH CAUTION WITHIN THE PROPOSED WORK AREA TO PREVENT ANY INTERRUPTION TO EXISTING UTILITY SERVICE.
8. PRIOR TO CONSTRUCTION, THE CONTRACTOR SHALL PROVIDE A MAINTENANCE AND PROTECTION OF TRAFFIC (MPT) PLAN IN ACCORDANCE WITH ALL LOCAL, STATE AND FEDERAL REQUIREMENTS.
9. CONTRACTOR SHALL COVER CONSTRUCTION DUMPSTERS AND ROLL-OFF CONTAINERS, AND STORE ALL CONSTRUCTION CHEMICALS INSIDE THE CONSTRUCTION TRAILER OR UNDER A COVERED AREA DURING PERIODS WHEN CONSTRUCTION CEASES.
10. ALL SITE FEATURES OUTSIDE LIMIT OF WORK AND NOT DESIGNATED FOR DEMOLITION SHALL BE PROTECTED.

SHEET LEGEND

- REMOVE & DISPOSE OF PAVEMENT (REMOVE PAVEMENT, CURB AND/OR STRUCTURE WITHIN ZONE)
- BUILDING DEMOLITION
- UTILITY LINE DEMOLITION
- CATCH BASIN INLET PROTECTION
- SEDIMENT BARRIER

BAR SCALE
1" = 20'
CHECK GRAPHIC SCALE BEFORE USING

NOT FOR CONSTRUCTION

\\woodardcurran.net\shared\Projects\0227007.07 PFDC - 58 Fore Block 1\wip\Drawings\Phase 1 - Site Plan Submission\0227007 Phase 1 SPS Mon, Nov 04, 2019 - 1:38pm

DEMOLITION NOTES:

1. SEQUENCE OF WORK WILL FOLLOW THE CONSTRUCTION MANAGEMENT PLAN. DEMOLITION ACTIVITIES SHALL BE SEQUENCED TO ENSURE AREAS OF THE SITE SHALL REMAIN OPERATIONAL DURING CONSTRUCTION.
2. PRIOR TO THE START OF DEMOLITION, THE CONTRACTOR SHALL OBTAIN ALL NECESSARY PERMITS AND/OR APPROVALS FROM THE CITY OF PORTLAND, AND ALL OTHER AUTHORITIES HAVING JURISDICTION.
3. THE WORD "DEMOLISH" SHALL IMPLY THE FULL REMOVAL AND PROPER DISPOSAL OF THE ITEM AND ANY APPURTENANT ITEMS, AS NOTED, OR AS DIRECTED BY THE OWNER OR THEIR REPRESENTATIVE. THE OWNER RETAINS THE RIGHT TO KEEP ANY ITEM NOTED FOR REMOVAL OR DEMOLITION AT THE REQUEST OF THE OWNER OR THEIR REPRESENTATIVE.
4. CONSTRUCTION/DEMOLITION DEBRIS NOT APPROVED FOR REUSE ON-SITE, SHALL BE REMOVED AND DISPOSED OFF SITE IN ACCORDANCE WITH THE REQUIREMENTS OF ALL AUTHORITIES HAVING JURISDICTION. WASTE MANIFEST FORMS DOCUMENTING PROPER OFF-SITE DISPOSAL SHALL BE MADE AVAILABLE TO THE SITE/CIVIL ENGINEER AND THE CITY OF PORTLAND UPON REQUEST.
5. PRIOR TO THE START OF DEMOLITION, THE CONTRACTOR SHALL VERIFY THE LOCATION OF EXISTING UTILITIES TO BE DEMOLISHED OR TO REMAIN PROTECTED DURING CONSTRUCTION. IF ANY DISCREPANCIES ARE FOUND, THE CONTRACTOR SHALL NOTIFY THE ENGINEER IN WRITING OF THE CONFLICT.
6. THE CONTRACTOR SHALL PROTECT ALL EXISTING UTILITIES TO REMAIN. ANY TEMPORARY SHUT DOWNS REQUIRED TO FACILITATE THE PROPOSED CONSTRUCTION, WHICH MAY AFFECT USES ON ADJACENT PROPERTIES SHALL BE COORDINATED BY THE CONTRACTOR, THE CITY OF PORTLAND AND APPLICABLE UTILITY.
7. CONTRACTOR SHALL REPAIR OR REPLACE ANY STRUCTURES OR UTILITIES DAMAGED DURING CONSTRUCTION, THE CONTRACTOR SHALL PROCEED WITH CAUTION WITHIN THE PROPOSED WORK AREA TO PREVENT ANY INTERRUPTION TO EXISTING UTILITY SERVICE.
8. PRIOR TO CONSTRUCTION, THE CONTRACTOR SHALL PROVIDE A MAINTENANCE AND PROTECTION OF TRAFFIC (MPT) PLAN IN ACCORDANCE WITH ALL LOCAL, STATE AND FEDERAL REQUIREMENTS.
9. CONTRACTOR SHALL COVER CONSTRUCTION DUMPSTERS AND ROLL-OFF CONTAINERS, AND STORE ALL CONSTRUCTION CHEMICALS INSIDE THE CONSTRUCTION TRAILER OR UNDER A COVERED AREA DURING PERIODS WHEN CONSTRUCTION CEASES.
10. ALL SITE FEATURES OUTSIDE LIMIT OF WORK AND NOT DESIGNATED FOR DEMOLITION SHALL BE PROTECTED.

SHEET LEGEND

- REMOVE & DISPOSE OF PAVEMENT (REMOVE PAVEMENT, CURB AND/OR STRUCTURE WITHIN ZONE)
- BUILDING DEMOLITION
- UTILITY LINE DEMOLITION
- CATCH BASIN INLET PROTECTION
- SEDIMENT BARRIER

MATCHLINE – SEE SHEET C-003

FORE STREET

DEMOLISH BUILDING 4

DEMOLISH BUILDING 5

DEMOLISH EXISTING WOOD RETAINING WALL

MNGRR TO REMOVE BUILDINGS & TRACKS

PROTECT & MAINTAIN USE OF MARINA WATER DURING CONSTRUCTION

PROTECT & MAINTAIN USE OF MARINA ELECTRICAL DURING CONSTRUCTION

APPROX. LOCATION 33" FORCE MAIN SEWER LINE

100 YEAR FLOOD LINE, ZONE V2 (EL 13) AS SCALED FROM FLOOD INSURANCE RATE MAP PANEL 230051 0014B DATED JULY 17, 1986

TM 2-A-3
N/F
TIMOTHY HALEY, TRUSTEE
24759/67, 69

TM 2-A-10

ZONE LINE
250' SHORELAND ZONE
75' SHORELAND ZONE
EWPZ
B6
R6

BAR SCALE
1" = 20'
CHECK GRAPHIC SCALE BEFORE USING

NOT FOR CONSTRUCTION

WOODARD & CURRAN
41 Hutchins Drive
Portland, Maine 04102
800.426.4262 | www.woodardcurran.com

COMMITMENT & INTEGRITY DRIVE RESULTS
THIS DOCUMENT IS THE PROPERTY OF WOODARD & CURRAN INC., AND ITS CLIENT. DISCLOSURE OR REPRODUCTION IS PROHIBITED WITHOUT THE EXPRESS CONSENT OF WOODARD & CURRAN INC.

STATE OF MAINE
LAUREN JANET SMETT
No. 12284
REGISTERED PROFESSIONAL ENGINEER

REV	DESCRIPTION	DATE
1	227007 PMB 1.08.19 Ltr.	

REV	DESCRIPTION	DRAWN BY:	DESIGNED BY:	CHECKED BY:
		BDM	LJS	DLC

PORTLAND FORESIDE DEVELOPMENT CO
PORTLAND, ME 04102

DEMOLITION PLAN - 2

PHASE 1 SITE PLAN SUBMISSION

JOB NO.: 0227007
DATE: NOVEMBER 2019
SCALE: 1"=20'
SHEET: 5 OF 17

C-004

\\woodardcurran.net\shared\Projects\0227007.07 PFDC - 58 Fore Block \wpb\Drawings\Phase 1 - Site Plan Submission\0227007 Phase 1 Site Plan.dwg, Nov 08, 2019 - 1:38pm

42x30 SHEET
1:1

FORE CONNECTOR

PROVIDE GRANITE CURB & TEMPORARY BITUMINOUS SIDEWALK TO CLOSE EXISTING DRIVEWAY & CONNECT TO SIDEWALK & RAMP INSTALLED BY ADJACENT DEVELOPMENT

MAINTAIN EXISTING CONCRETE SIDEWALK & CURB

MATCH EXISTING CONCRETE SIDEWALK

ZONING DISTRICT BOUNDARY

FORE STREET

WATERVILLE STREET

MATCHLINE – SEE SHEET C–101

BIKE RACK, SEE LANDSCAPING PLANS

STAIR & RETAINING WALLS

STREET TREES, SEE LANDSCAPING PLANS

EXISTING BELOW GRADE BUILDING 15 LIMIT

PROVIDE SIDEWALK IMPROVEMENTS ALONG FORE STREET

REMOVE EXISTING CURB, PROVIDE FLUSH GRANITE CURB

PROVIDE 7" LONG TIPDOWN CURB

FENCE, SEE LANDSCAPING PLANS

PROVIDE 7" LONG TIPDOWN CURB

25.5'

RAMP

RAMP

5.0'

LOAM & SEED

EXISTING BITUMINOUS SIDEWALK TO REMAIN

PROVIDE RETAINING WALL

LEVEL 1 ROOF

BLDG. 24

BLDG. 14

(24, 14, 15, 16 EXISTING BUILDING RENOVATION)

BLDG. 15

BLDG. 16

TOWNHOUSES
(NEW BUILDING CONSTRUCTION)

OVERHEAD BRIDGE

OVERHEAD BRIDGE

RAMP TO LEVEL 4

56.2'

PAVER PLAZA AREA

BUILDING 4
(NEW BUILDING CONSTRUCTION)

BUILDING 3
(EXISTING BUILDING RENOVATION)

BUILDING 2
(EXISTING BUILDING RENOVATION)

BIKE RACK, TYP. OF 11, SEE LANDSCAPING PLANS

PAVER PLAZA AREA

OVERHEAD BRIDGE

44.0'

MATCH EXISTING BITUMINOUS SIDEWALK

PROTECT EXISTING STREET LIGHT

PROTECT EXISTING GRANITE CURB

8.0'

BRICK SIDEWALK

R10.0'

PROVIDE 14" LONG TIPDOWN CURB

RAMP

REMOVE EXISTING CURB, PROVIDE FLUSH GRANITE CURB

PROVIDE BOLLARDS

TRASH COMPACTOR ENTRANCE

12.0'

BUILDING 1A
(NEW BUILDING CONSTRUCTION)

PORTLAND COMPANY HISTORIC DISTRICT BOUNDARY

250' SHORELAND ZONE

50' PUBLIC ACCESS EASEMENT

STONEDUST, SEE LANDSCAPING PLANS

BUILDING 6B
(EXISTING BUILDING RENOVATION)

BENCH (TYP.), SEE LANDSCAPING PLANES

BUILDING 6
(EXISTING BUILDING RENOVATION)

PROVIDE 7' LONG TIPDOWN CURB

28.0'

PROTECT EXISTING GRANITE CURB

PROTECT EXISTING ADA RAMP

RAMPED SITE ENTRANCE

12.0'

PARKING – SPACES

PAVER SHARED STREET

24.0'

22.0'

8.0'

8.0'

PARKING – SPACES

THAMES STREET EXTENSION

B6
EWPZ

BOLLARD (TYP.), SEE LANDSCAPE PLANS

SITE LANDSCAPING, SEE LANDSCAPING PLANS

REFUSE ENCLOSURE

DEMOLISH BRICK SIDEWALK & CURB

BUILDING 12
(EXISTING BUILDING RECONSTRUCTION)

MECH. ENCLOSURE

EXISTING UNDERGROUND FUEL TANKS

SPACE RESERVED FUTURE UNDERGROUND FUEL TANK

12.0'

PAVER SHARED STREET

FENCE, SEE LANDSCAPING PLANS

FENCE, SEE LANDSCAPING PLANS

PROVIDE TEMPORARY REGLAIM PAVEMENT , SPACE FOR MARINA VEHICLES, EMERGENCY VEHICLE ACCESS & DROP–OFF

B6
EWPZ

442.90'
S52°46'32"W

TRAIL RELOCATION TO BE COORDINATED WITH CITY OF PORTLAND

TRACK RELOCATION TO BE COORDINATED WITH MAINE NARROW GAUGE RAILROAD & MDOT

MDOT PROPERTY

NARROW GAUGE RAILROAD TO BE RELOCATED TO MDOT PROPERTY

B6
EWPZ

250' SHORELAND ZONE

S52°46'32"W

MDOT PROPERTY

12' WIDE BITUMINOUS TRAIL

CITY OF PORTLAND PROPERTY

68.8'

S48°04'59"W

MDOT PROPERTY

PF
MARINA PROPERTY

N41°54'38"E
8.00'

MATCHLINE – SEE SHEET C–101

20' 0 20' 40'
BAR SCALE
1" = 20'
CHECK GRAPHIC SCALE BEFORE USING

NOTES:
1. SEE LANDSCAPE PLANS FOR SITE SURFACE MATERIAL ASSOCIATED WITH LANDSCAPED AREAS, PATIOS, AND NON–BITUMINOUS WALKWAYS & ROADWAYS.

2. ALL AREAS WITHIN LIMIT OF WORK NOT IDENTIFIED FOR FINISH SURFACE MATERIALS (PAVERS, BRICK, PAVEMENT, LANDSCAPING) SHALL BE FINISHED WITH RECLAIM ASPHALT.

3. UTILITY & DRAINAGE STRUCTURES NOT SHOWN FOR CLARITY, SEE GRADING & DRAINAGE & UTILITY PLAN FOR MORE INFORMATION.

NOT FOR CONSTRUCTION

41 Hutchins Drive
Portland, Maine 04102
800.426.4262 | www.woodardcurran.com

COMMITMENT & INTEGRITY DRIVE RESULTS

THIS DOCUMENT IS THE PROPERTY OF WOODARD & CURRAN INC., AND ITS CLIENT. DISCLOSURE OR REPRODUCTION WITHOUT WRITTEN CONSENT IS PROHIBITED.

WOODARD & CURRAN

STATE OF MAINE
LAUREN MARIE SMETT
No. 12284
REGISTERED PROFESSIONAL ENGINEER

REV	DESCRIPTION	DATE
1	07/07 PMB 1:36.51.4pm	

REV	DESCRIPTION	DRAWN BY:	DESIGNED BY:
		PDM	LJS

PORTLAND FORESIDE DEVELOPMENT CO.
PORTLAND, ME 04102

PHASE 1 SITE PLAN SUBMISSION

SITE PLAN - 1

JOB NO.:	0227007
DATE:	NOVEMBER 2019
SCALE:	1"=20'
SHEET:	6 OF 17

C-100

\\woodardcurran.net\shared\Projects\0227007.07 PFDC - 58 Fore Block 1\wip\Drawings\Phase 1 - Site Plan Submission\0227007 Phase 1 - Site Plan.dwg, Nov 08, 2019 - 1:39pm

NOTES:
1. SEE LANDSCAPE PLANS FOR SITE SURFACE MATERIAL ASSOCIATED WITH LANDSCAPED AREAS, PATIOS, AND NON-BITUMINOUS WALKWAYS & ROADWAYS.
2. ALL AREAS WITHIN LIMIT OF WORK NOT IDENTIFIED FOR FINISH SURFACE MATERIALS (PAVERS, BRICK, PAVEMENT, LANDSCAPING) SHALL BE FINISHED WITH RECLAIM ASPHALT.
3. UTILITY & DRAINAGE STRUCTURES NOT SHOWN FOR CLARITY, SEE GRADING & DRAINAGE & UTILITY PLAN FOR MORE INFORMATION.

FORE STREET

MATCHLINE - SEE SHEET C-100

ZONE LINE

R6
B6

FENCE, SEE LANDSCAPING PLANS

LIMIT OF LEVEL 1

BUILDING 4
(NEW BUILDING CONSTRUCTION)

TM 2-A-2
N/F
MACGOWAN
15773/153

TM 2-A-3
N/F
TIMOTHY HALEY, TRUSTEE
24759/67, 69

TM 2-A-10

N45°16'52"E 43.36'

150.00'

N45°16'52"E 100.00'

N53°46'42"E

N47°33'52"E 100.00'

36.5'

22.0'

BITUMINOUS PAVEMENT

20' DOUBLE SWING GATE

250' SHORELAND ZONE

MAINTAIN EXISTING SURFACE CONDITIONS

MNGRR TO REMOVE BUILDINGS & TRACKS

255.00'
S47°33'52"W

685.00'

75' SHORELAND ZONE

EWPZ

430.00'

MATCH EXISTING BITUMINOUS TRAIL

12' WIDE BITUMINOUS TRAIL

MOODY PROPERTY

MARINA PROPERTY

APPROX. LOCATION 33" FORCE MAIN SEWER LINE

S48°05'52"W 44.00'

EXISTING MARINA

BAR SCALE
1" = 20'
CHECK GRAPHIC SCALE BEFORE USING

NOT FOR CONSTRUCTION

WOODARD & CURRAN
41 Hutchins Drive
Portland, Maine 04102
800.426.4262 | www.woodardcurran.com
COMMITMENT & INTEGRITY DRIVE RESULTS

THIS DOCUMENT IS THE PROPERTY OF WOODARD & CURRAN INC. AND ITS CLIENT. IT SHALL NOT BE USED OR REPRODUCED WITHOUT THE EXPRESS WRITTEN PERMISSION OF WOODARD & CURRAN INC.

STATE OF MAINE
LAUREN JANET SWETT
No. 12284
REGISTERED PROFESSIONAL ENGINEER

REV	DESCRIPTION	DATE
	227007 PHASE 1 SITE PLAN	

REV	DESCRIPTION	DATE
	DESIGNED BY: LJS DRAWN BY: BDM CHECKED BY: DLC	

SITE PLAN - 2

PHASE 1 SITE PLAN SUBMISSION

PORTLAND FORESIDE DEVELOPMENT CO.
PORTLAND, ME 04102

JOB NO.: 0227007
DATE: NOVEMBER 2019
SCALE: 1"=20'
SHEET: 7 OF 17

C-101

\\woodardcurran.net\shared\Projects\0227007.07 PPDS - 58 Fore Block \wet\Drawings\Phase 1 - Site Plan Submission\0227007 Phase 1 Site Plan.dwg, Nov 08, 2019 - 2:06pm

FORE CONNECTOR

FORE STREET

WATERVILLE STREET

TOWNHOUSES

MATCHLINE – SEE SHEET C–103

BUILDING 1A
FF ELEV. 15.25

BUILDING 2
FF ELEV. 15.00

BUILDING 3
FF ELEV. 15.00

BUILDING 4
FF ELEV. 16.00

BUILDING 6
FF ELEV. 15.00

BUILDING 6B
FF ELEV. 15.00

BUILDING 12
FF ELEV. 15.05

BLDG. 14
FF ELEV. 15.00

BLDG. 15
FF ELEV. 15.00

BLDG. 16
FF ELEV. 15.00

BLDG. 24
FF ELEV. 15.00

THAMES STREET EXTENSION

250' SHORELAND ZONE

R6
B6

CONNECT TO EXISTING 15" STUB, INV. 20.00

RIPRAP WITH UNDERDRAIN AT BASE OF SLOPE

RETAINING WALL TO BE DESIGNED BY OTHERS

PROVIDE BACKFLOW PREVENTER IN ROOF DRAIN

12" ROOF DRAIN, REFER TO ARCHITECTURAL PLANS

CONNECT TO EXISTING 15" STUB, INV. 5.17

PROVIDE CLEANOUT AT END OF TRENCH DRAIN

TRENCH DRAIN, SEE DETAILS

PIPE SD1 BELOW TRENCH DRAIN

TRENCH DRAIN AT BASE OF EACH SET OF STEPS (TYP.) (SEE LANDSCAPE PLAN)

INSERTA–TEE CONNECTION

INSERTA–WYE CONNECTION AT EACH TRENCH DRAIN (TYP. OF 4)

PROTECT EXISTING UNDERGROUND FUEL TANKS & FUEL LINES

RELOCATE EXISTING CATCH BASIN, COORDINATE WITH CITY ON FINAL LOCATION

RELOCATION OF MNGRR; COORDINATE FINAL GRADES OF RAIL CORRIDOR WITH MNGRR

RAISE EXISTING FUEL TANK ACCESS PORTS/ MANHOLES TO PROPOSED GRADE; RELOCATE VENTS TO BLOCK 3

CONNECT DMH 5 TO OUTFALL PREVIOUSLY INSTALLED

STORMWATER OUTFALL INV. OUT 6.30 INSTALLED UNDER SEPARATE CONTRACT

SUBSURFACE R–TANK

JELLYFISH 1

JELLYFISH 2

MOOT PROPERTY

CITY OF PORTLAND PROPERTY

MARINA PROPERTY

REFER TO SHEET C–106 FOR PIPE & STRUCTURE SCHEDULES

BAR SCALE
1" = 20'
CHECK GRAPHIC SCALE BEFORE USING

NOT FOR CONSTRUCTION

WOODARD & CURRAN
41 Hutchins Drive
Portland, Maine 04102
800.426.4262 | www.woodardcurran.com
COMMITMENT & INTEGRITY DRIVE RESULTS

THIS DOCUMENT IS THE PROPERTY OF WOODARD & CURRAN INC., AND ITS CLIENT. DISCLOSURE OR REPRODUCTION WITHOUT WRITTEN CONSENT IS PROHIBITED.

STATE OF MAINE
LAUREN ANNE SWETT
No. 12284
REGISTERED PROFESSIONAL ENGINEER

REV	DESCRIPTION	DATE
	227007 PHASE 1 SITE PLAN	

REV	DESCRIPTION	DATE
DESIGNED BY: LJS	DRAWN BY: BDM	CHECKED BY: DLC

GRADING & DRAINAGE PLAN - 1

PORTLAND FORESIDE DEVELOPMENT CO.
PORTLAND, ME 04102

PHASE 1 SITE PLAN SUBMISSION

MATCHLINE – SEE SHEET C–103

JOB NO.:	0227007
DATE:	NOVEMBER 2019
SCALE:	1"=20'
SHEET:	8 OF 17

C-102

\\woodardcurran.net\shared\Projects\0227007.07 PFDC - 58 Fore Block 1\wip\Drawings\Phase 1 - Site Plan Submission\0227007 Phase 1 Site Plan.dwg, Nov 08, 2019 - 2:01pm

42x30 SHEET
1:1

FORE STREET

MATCHLINE – SEE SHEET C–102

MATCHLINE – SEE SHEET C–102

BUILDING 4
FF ELEV. 16.00

RIPRAP DRAINAGE SWALE

LEVEL LIP SPREADER

TM 2–A–2
N/F
MACCOWAN
15773/153

TM 2–A–3
N/F
TIMOTHY HALEY,
TRUSTEE
24759/67, 69

TM 2–A–10

R6
B6

ZONE LINE

75' SHORELAND ZONE

250' SHORELAND ZONE

EWPZ

PROPERTY

PROPERTY

APPROX. LOCATION 33" FORCE MAIN SEWER LINE

EXISTING MARINA

DMH 6

PIPE SD61

PIPE SD62

JELLYFISH 2

PIPE SD56

PIPE SD57

CB34

CB27

PIPE SD65

PIPE SD66

N47°33'52"E 100.00'

S47°33'52"W 255.00'

S46°50'52"W 120.00'

N45°16'52"E 112.00'

N53°45'52"E 49.73'

S46°50'52"W 27.46'

N47°33'52"E 430.00'

S46°50'52"W 665.00'

N47°33'52"E 440.00'

N46°50'52"E 114.96'

S46°50'52"W 27.46'

BAR SCALE
1" = 20'
CHECK GRAPHIC SCALE BEFORE USING

20' 0 20' 40'

NOT FOR CONSTRUCTION

REFER TO SHEET C–106 FOR PIPE & STRUCTURE SCHEDULES

WOODARD & CURRAN
41 Hutchins Drive
Portland, Maine 04102
800.426.4262 | www.woodardcurran.com

COMMITMENT & INTEGRITY DRIVE RESULTS

THIS DOCUMENT IS THE PROPERTY OF WOODARD & CURRAN INC. AND ITS CLIENT. ITS CONTENTS MAY NOT BE REPRODUCED OR DISCLOSED WITHOUT WRITTEN CONSENT OF WOODARD & CURRAN INC. AND ITS CLIENT.

STATE OF MAINE
LAUREN JANET SMETT
No. 12284
REGISTERED PROFESSIONAL ENGINEER

Lauren Smett
12/19/19

REV	DESCRIPTION	DATE
1	227007 PHASE 1 SITE PLAN	12/19/19

REV	DESCRIPTION	DATE
	DESIGNED BY: LJS DRAWN BY: BDM CHECKED BY: DLC	

GRADING & DRAINAGE PLAN - 2

PORTLAND FORESIDE
DEVELOPMENT CO
PORTLAND, ME 04102

PHASE 1 SITE PLAN SUBMISSION

JOB NO.: 0227007
DATE: NOVEMBER 2019
SCALE: 1"=20'
SHEET: 9 OF 17

C-103

\\woodardcurran.net\shared\Projects\0227007.07 PFDC - 58 Fore Block 1\acb\Drawings\Phase 1 - Site Plan Submission\0227007 Phase 1 Site Plan.dwg, Nov 08, 2019 - 2:02pm

42x30 SHEET
1:1

FORE CONNECTOR

FORE STREET

THAMES STREET EXTENSION

MATCHLINE – SEE SHEET C-105

MATCHLINE – SEE SHEET C-105

BUILDING 1A

BUILDING 2

BUILDING 3

BUILDING 6

BUILDING 6B

BUILDING 12

BLDG. 24

BLDG. 14

BLDG. 15

BLDG. 16

TOWNHOUSES

12" DI WATER MAIN

REFER TO MEP PLANS FOR UNDERGROUND TRANSFORMERS & ASSOCIATED ELECTRICAL UTILITIES

WATER METER

12" DI WATER

WATER RPZ & BACKFLOW PREVENTER INSTALLED IN BUILDING 1A, REFER TO BUILDING MEP PLANS

GAS METER

6" GREASE WASTE

EXTERNAL GREASE TRAP

6" SANITARY SEWER

4" DOMESTIC & 8" FIRE PROTECTION

(3)-6" CONCRETE ENCASED COMMUNICATION CONDUITS

(3)-6" CONCRETE ENCASED ELECTRICAL CONDUITS

(10) 6" POWER & (8) 4" TELECOMMUNICATIONS DUCT BANK (CONCRETE ENCASED)

OIL WATER SEPARATOR

6" WATER SERVICE W/ VALVE & HYDRANT

6" PLASTIC COATED STEEL GAS SERVICE, TYP.

CONNECT TO EXISTING STUB

2" DOMESTIC & 6" FIRE PROTECTION

4" SANITARY SEWER

4" GREASE WASTE EXTERNAL GREASE TRAP

CONDUITS FOR ELECTRICAL & COMMUNICATIONS, REFER TO MEP PLANS

EXISTING SUBSURFACE MARINA FUEL TANKS

4" DOMESTIC & 8" FIRE PROTECTION

4" DOMESTIC & 8" FIRE PROTECTION

6" GREASE WASTE

EXTERNAL GREASE TRAP

6" SANITARY SEWER

6" WATER SERVICE W/ VALVE & HYDRANT

(6) 6" POWER & (6) 4" TELECOMMUNICATIONS DUCT BANK (CONCRETE ENCASED)

4" HDPE SEWER FORCE MAIN

6" PLASTIC COATED STEEL GAS SERVICE, TYP.

12" DI WATER SERVICE, TYP.

CONNECT TO EXISTING MARINA FIRE SERVICE

SANITARY SEWER PUMP STATION

SMH 1

SMH 2

SMH 3

SMH 4

SMH 5

SMH 6

SMH 7

SMH 8

PIPE S1

PIPE S2

PIPE S3

PIPE S4

PIPE S5

PIPE S6

PIPE S7

PIPE S8

PIPE S9

PIPE S10

PIPE S11

PIPE S12

PIPE S13

PIPE S14

PIPE S15

PIPE S16

PIPE S17

PIPE S18

PIPE S19

PIPE S20

PIPE S21

PIPE S22

PIPE S23

PIPE S24

PIPE S25

PIPE S26

PIPE S27

PIPE S28

PIPE S29

PIPE S30

PIPE S31

PIPE S32

PIPE S33

PIPE S34

PIPE S35

PIPE S36

PIPE S37

PIPE S38

PIPE S39

250' SHORELAND ZONE

ZONE LINE R6 B6

B6 EWPZ

BAR SCALE
1" = 20'
CHECK GRAPHIC SCALE BEFORE USING

NOT FOR CONSTRUCTION

WOODARD & CURRAN
41 Hutchins Drive
Portland, Maine 04102
800.426.4262 | www.woodardcurran.com

COMMITMENT & INTEGRITY DRIVE RESULTS

THIS DOCUMENT IS THE PROPERTY OF WOODARD & CURRAN INC., AND ITS CLIENT. DISCLOSURE OR REPRODUCTION WITHOUT WRITTEN CONSENT IS PROHIBITED.

STATE OF MAINE
LAUREN JANET SMETT
No. 12284
REGISTERED PROFESSIONAL ENGINEER

REV	DESCRIPTION	DATE
1	07/07 PMS 1.08.1 Site Plan	
2	CHECKED BY: DLC	

REV	DESCRIPTION	DATE
1	DESIGNED BY: LJS	
2	DRAWN BY: BDM	

UTILITY PLAN - 1

PORTLAND FORESIDE DEVELOPMENT CO.
PORTLAND, ME 04102

PHASE 1 SITE PLAN SUBMISSION

JOB NO.:	0227007
DATE:	NOVEMBER 2019
SCALE:	1"=20'
SHEET:	10 OF 17

C-104

\\woodardcurran.net\shared\Projects\0227007.07 PFDC – 08 Fore Block 1\wip\Drawings\Phase 1 – Site Plan Submission\0227007 Phase 1 Site Plan.dwg, Nov 08, 2019 - 2:04pm

FORE STREET

MATCHLINE - SEE SHEET C-104

BUILDING 4

CONNECT TO EXISTING WATER MAIN IN FORE STREET

WATER METER

12" DI WATER SERVICE

6" PLASTIC COATED STEEL GAS SERVICE, TYP. GAS METER

WATER RPZ & BACKFLOW PREVENTER INSTALLED IN BUILDING 4, REFER TO BUILDING MEP PLANS

R6
B6

ZONE LINE

TM 2-A-2
N/F
MACGOWAN
15773/153

TM 2-A-3
N/F
TIMOTHY HALEY,
TRUSTEE
24759/67, 69

TM 2-A-10

N47°46'40"E
49.73'

N47°33'52"E
100.00'

S47°33'52"W
112.00'

S47°33'52"W
100.00'

S47°33'52"W
255.00'

685.00'

430.00'

N47°33'52"E
665.26'

S47°33'52"W
120.00'

S48°05'42"W

S45°50'52"W

S61°40'14"W

N47°33'52"E
449.48'

12" DI WATER SERVICE

6" SANITARY SEWER

OIL WATER SEPARATOR

PIPE S12

PIPE S10

PIPE S6

8" SANITARY STUB FOR FUTURE CONNECTION

6" GAS STUB FOR FUTURE CONNECTION

12" WATER SERVICE STUB FOR FUTURE CONNECTION

ELECTRICAL & COMMUNICATIONS SERVICE STUB FOR FUTURE CONNECTION

6" PLASTIC COATED STEEL GAS SERVICE, TYP.

PROVIDE 3" DOMESTIC MARINA WATER MAIN CONNECTION

PROVIDE 6" FIRE MARINA WATER MAIN CONNECTION

COORDINATE DEMOLITION OF OVERHEAD ELECTRICAL WITH BUILDING 4 CONSTRUCTION

250' SHORELAND ZONE

75' SHORELAND ZONE

EWPZ

MDOT PROPERTY

APPROX. LOCATION 33" FORCE MAIN SEWER LINE

EXISTING MARINA

TRANSF.

CMH

EMH

HH

NOT FOR CONSTRUCTION

BAR SCALE
1" = 20'
CHECK GRAPHIC SCALE BEFORE USING

20' 0 20' 40'

WOODARD & CURRAN
41 Hutchins Drive
Portland, Maine 04102
800.426.4262 | www.woodardcurran.com

COMMITMENT & INTEGRITY DRIVE RESULTS

THIS DOCUMENT IS THE PROPERTY OF WOODARD & CURRAN INC. AND ITS CLIENT. ITS CONTENTS MAY NOT BE REPRODUCED OR USED WITHOUT WRITTEN PERMISSION.

STATE OF MAINE
LAUREN JANET SMETT
No. 12284
REGISTERED PROFESSIONAL ENGINEER

REV	DESCRIPTION	DATE
1	07/07 PMB, 10E TI Site	
	CHECKED BY: DJC	

REV	DESCRIPTION	DATE
	DESIGNED BY: LJS	
	DRAWN BY: PDM	

UTILITY PLAN - 2

PORTLAND FORESIDE DEVELOPMENT CO.
PORTLAND, ME 04102

PHASE 1 SITE PLAN SUBMISSION

JOB NO.: 0227007
DATE: NOVEMBER 2019
SCALE: 1"=20'
SHEET: 11 OF 17

C-105

J:\woodardcurran.net\shared\Projects\0227007.07 PFDC - 58 Fore Block 1\wip\Drawings\Phase 1 - Site Plan Submission\0227007 Phase 1 Site Plan.dwg, Nov 08, 2019 - 2:05pm

STRUCTURE TABLE				
NAME	DIA.	RIM	INV IN/SIZE/FROM	INV OUT/SIZE/TO
CB1	4'	31.25	23.00/6"UD/ 25.00/10"SD/CB35 25.00/10"SD/	20.05/15"SD/
CB2	4'	14.65		10.65/10"SD/TRENCH DRAIN OUTLET 2
CB3	4'	14.40	10.30/8"SD/CB4	
CB4	4'	14.55		10.44/8"SD/CB3 9.80/8"SD/DMH 1
CB5	4'	14.50		9.67/8"SD/DMH 2
CB6	4'	14.74	10.35/8"SD/CB7 10.35/8"SD/CB31	10.30/8"SD/CB28
CB7	4'	14.74		10.45/8"SD/CB6
CB7	4'	14.33		10.50/10"SD/DMH3
CB8	4'	14.71		10.29/8"SD/CB9
CB9	4'	14.71	10.15/8"SD/CB8	10.10/8"SD/CB10
CB10	4'	14.60	9.92/12"SD/CB12 9.92/8"SD/CB9 9.92/8"SD/	9.82/15"SD/CB11
CB11	4'	14.53	9.75/15"SD/CB10 9.75/8"SD/	9.70/15"SD/CB27
CB12	4'	14.42	10.08/10"SD/DMH 7	10.03/12"SD/CB10
CB13	4'	14.83	10.59/10"SD/CB14	10.54/10"SD/CB32
CB14	4'	14.78	10.68/8"SD/CB15 10.68/8"SD/	10.63/10"SD/CB13
CB15	4'	14.78	10.82/8"SD/CB16	10.77/8"SD/CB14
CB16	4'	14.72	10.97/8"SD/CB17	10.92/8"SD/CB15
CB17	4'	14.75		11.06/8"SD/CB16
CB18	4'	14.72		10.91/8"SD/CB19
CB19	4'	14.72	10.82/8"SD/CB18	10.77/8"SD/CB20
CB20	4'	14.73	10.69/8"SD/CB19	10.64/8"SD/CB21
CB21	4'	14.73	10.56/8"SD/CB20	10.51/8"SD/CB22
CB22	4'	14.76	10.43/8"SD/CB21 10.43/8"SD/	10.38/8"SD/CB23
CB23	4'	14.78	10.23/8"SD/CB22 10.23/10"SD/CB24	10.13/10"SD/CB25
CB24	4'	14.75	10.40/10"SD/	10.30/10"SD/CB23
CB25	4'	14.46	10.05/10"SD/CB23 10.05/8"SD/	10.00/12"SD/CB26
CB26	4'	14.46	9.88/12"SD/CB25 9.88/8"SD/ 9.88/8"SD/CB28	9.83/15"SD/DMH 1
CB27	5'	14.40	9.63/8"SD/ 9.63/24"SD/CB34 9.63/10"SD/ 9.63/15"SD/CB11	9.53/24"SD/DMH 6
CB28	4'	14.51	10.13/8"SD/CB6	10.08/8"SD/CB26
CB29	4'	14.60	9.76/8"SD/	9.71/8"SD/DMH 2
CB30	4'	14.71		10.70/8"SD/CB31
CB31	4'	14.66	10.54/8"SD/CB30	10.49/8"SD/CB6
CB32	4'	14.77	10.49/10"SD/CB13	10.44/10"SD/CB33
CB33	4'	14.77	10.38/10"SD/CB32 10.38/8"SD/	10.33/10"SD/DMH 7
CB34	4'	14.47	9.82/24"SD/ 9.82/24"SD/	9.72/24"SD/CB27
CB35	4'	29.50		25.50/10"SD/CB1
DMH 1	7'	14.58	9.77/12"SD/ 9.77/12"SD/ 9.77/8"SD/ 9.77/8"SD/CB4 9.77/15"SD/CB26	9.77/21"SD/DMH 2
DMH 2	6'	14.48	9.53/21"SD/DMH 1 9.60/8"SD/CB29 9.60/8"SD/CB5	9.50/21"SD/DMH 3
DMH 3	8'x6'	14.46	9.35/21"SD/DMH 2	9.35/15"SD/RTANK INLET 1 9.35/15"SD/RTANK INLET2 9.35/15"SD/RTANK INLET3
DMH 4	4'	12.18	7.55/21"SD/JELLYFISH 1	7.55/21"SD/DMH 5
DMH 5	4'	13.06	7.14/21"SD/DMH 4 7.14/24"SD/JELLYFISH 2	7.04/30"SD/
DMH 6	8'x6'	13.44	9.39/24"SD/CB27 9.39/15"SD/RTANK INLET6 9.39/15"SD/RTANK INLET5	9.39/15"SD/RTANK INLET4
DMH 7	4'	14.96	10.28/10"SD/CB33 10.28/8"SD/	10.18/10"SD/CB12
JELLYFISH 1	8'x6'	14.74	7.60/21"SD/RTANK OUTLET1	7.60/21"SD/DMH 4
JELLYFISH 2	8'x6'	12.71	7.82/24"SD/RTANK OUTLET2	7.82/24"SD/DMH 5
PS	4'	12.44	7.20/8"S/SMH 8	7.00/4"FM/SMH 1
SMH 1	4'	14.69	9.99/8"S/SMH 3 10.00/4"FM/PS	9.89/8"S/SMH 2
SMH 2	4'	14.69	9.12/8"S/SMH 1 9.12/8"S/	9.02/8"S/
SMH 3	4'	14.75	10.33/8"S/ 10.33/8"S/SMH 7	10.23/8"S/SMH 1
SMH 4	4'	14.94	8.06/8"S/SMH 5 8.00/8"S/ 8.00/6"S/	7.90/8"S/SMH 8
SMH 5	4'	14.73	8.37/6"S/SMH 6	8.27/8"S/SMH 4
SMH 6	4'	14.72	8.90/6"S/	8.80/6"S/SMH 5
SMH 7	4'	14.80	10.82/6"S/	10.72/8"S/SMH 3
SMH 8	4'	14.85	7.71/8"S/SMH 4	7.60/8"S/PS

PIPE TABLE			
PIPE NAME	SIZE	LENGTH	SLOPE
PIPE S1	8" S	189'	0.0041
PIPE S2	8" S	87'	0.0041
PIPE S3	8" S	56'	0.0043
PIPE S4	8" S	80'	0.0041
PIPE S5	8" S	94'	0.0042
PIPE S6	6" S	55'	0.0052
PIPE S7	6" S	33'	0.0050
PIPE S8	6" S	81'	0.0052
PIPE S9	8" S	50'	0.0043
PIPE S10	8" S	160'	0.0041
PIPE S11	8" S	45'	0.0044
PIPE S12	8" S	97'	0.0042
PIPE S13	8" S	25'	0.0056
PIPE S14	6" S	3'	0.0050
PIPE S15	6" S	5'	0.0050
PIPE S16	6" S	4'	0.0226
PIPE S17	6" S	2'	0.0109
PIPE S18	4" S	6'	0.0050
PIPE S19	6" S	17'	0.0050
PIPE S20	6" S	3'	0.0340
PIPE S21	6" S	1'	0.0994
PIPE S22	6" S	10'	0.0050
PIPE S23	6" S	29'	0.0050
PIPE S24	8" S	14'	0.0040
PIPE S25	6" S	11'	0.0050
PIPE S26	12" S	25'	0.0107
PIPE S27	12" S	20'	0.0131
PIPE S28	12" S	9'	0.0234
PIPE S29	12" S	25'	0.0107
PIPE S30	12" S	26'	0.0102
PIPE S31	12" S	42'	0.0063
PIPE S32	12" S	7'	0.0401
PIPE S33	6" S	5'	0.0201
PIPE S34	6" S	5'	0.0187
PIPE S35	6" S	57'	0.0050
PIPE S36	8" S	2'	0.0040
PIPE S37	8" S	32'	0.0040
PIPE S38	8" S	39'	0.0040
PIPE S39	6" S	3'	0.0040
PIPE SD1	12" SD	263'	0.0035
PIPE SD2	8" SD	25'	0.0046
PIPE SD3	21" SD	60'	0.0039
PIPE SD4	21" SD	30'	0.0050
PIPE SD5	15" SD	2'	0.0000
PIPE SD6	21" SD	5'	0.0000
PIPE SD7	21" SD	78'	0.0053
PIPE SD8	30" SD	83'	0.0100
PIPE SD9	15" SD	3'	0.0162
PIPE SD10	21" SD	3'	0.0175
PIPE SD11	12" SD	48'	0.0258
PIPE SD12	10" SD	30'	0.0054
PIPE SD13	12" SD	14'	0.0050
PIPE SD14	8" SD	19'	0.0035
PIPE SD15	8" SD	30'	0.0045
PIPE SD16	8" SD	4'	0.0094
PIPE SD17	10" SD	21'	0.0034
PIPE SD18	10" SD	22'	0.0033
PIPE SD19	12" SD	53'	0.0024
PIPE SD20	15" SD	35'	0.0017
PIPE SD21	10" SD	6'	0.0027

PIPE TABLE			
PIPE NAME	SIZE	LENGTH	SLOPE
PIPE SD22	8" SD	35'	0.0045
PIPE SD23	8" SD	9'	0.2851
PIPE SD24	8" SD	17'	0.0049
PIPE SD25	8" SD	17'	0.0049
PIPE SD26	8" SD	17'	0.0049
PIPE SD27	8" SD	17'	0.0049
PIPE SD28	8" SD	24'	0.0043
PIPE SD29	8" SD	35'	0.0325
PIPE SD30	8" SD	47'	0.0043
PIPE SD31	8" SD	38'	0.0044
PIPE SD32	8" SD	32'	0.0045
PIPE SD33	8" SD	22'	0.0047
PIPE SD34	8" SD	34'	0.0045
PIPE SD35	8" SD	21'	0.0044
PIPE SD36	8" SD	24'	0.0048
PIPE SD37	8" SD	25'	0.0044
PIPE SD38	15" SD	44'	0.0017
PIPE SD39	8" SD	23'	0.0043
PIPE SD40	15" SD	40'	0.0017
PIPE SD41	8" SD	43'	0.0044
PIPE SD42	8" SD	31'	0.0045
PIPE SD43	8" SD	34'	0.0042
PIPE SD44	12" SD	48'	0.0024
PIPE SD45	10" SD	33'	0.0031
PIPE SD46	8" SD	13'	0.0046
PIPE SD47	10" SD	14'	0.0036
PIPE SD48	8" SD	15'	0.0045
PIPE SD49	10" SD	18'	0.0034
PIPE SD50	10" SD	12'	0.0037
PIPE SD51	10" SD	12'	0.0037
PIPE SD52	8" SD	9'	0.0049
PIPE SD53	8" SD	17'	0.0049
PIPE SD54	8" SD	21'	0.0048
PIPE SD55	8" SD	19'	0.0048
PIPE SD56	24" SD	113'	0.0008
PIPE SD57	24" SD	39'	0.0008
PIPE SD58	24" SD	50'	0.0009
PIPE SD59	24" SD	22'	0.0062
PIPE SD60	15" SD	2'	0.0000
PIPE SD61	15" SD	2'	0.0000
PIPE SD62	24" SD	6'	0.0000
PIPE SD63	24" SD	114'	0.0060
PIPE SD64	15" SD	2'	0.0000
PIPE SD65	15" SD	2'	0.0000
PIPE SD66	15" SD	2'	0.0000
PIPE SD67	10" SD	191'	0.0046
PIPE SD68	30" SD	66'	0.0100
PIPE SD69	10" SD	98'	0.0051
PIPE SD70	6" UD	19'	0.0520
PIPE SD71	10" SD	30'	0.0168
PIPE SD72	10" SD	41'	0.2000
PIPE SD73	10" SD	7'	0.0028

41 Hutchins Drive
Portland, Maine 04102
800.426.4262 | www.woodardcurran.com

COMMITMENT & INTEGRITY DRIVE RESULTS

THIS DOCUMENT IS THE PROPERTY OF WOODARD & CURRAN INC., AND HIS CLIENT. DISCLOSURE OR REPRODUCTION IS PROHIBITED WITHOUT THE EXPRESS PERMISSION OF WOODARD & CURRAN INC.

STATE OF MAINE
LAUREN JANE SMETT
No. 12284
REGISTERED PROFESSIONAL ENGINEER

REV	DESCRIPTION	DATE
	07/07 PWB 1.1/8 11 Sets	

CHECKED BY: DLC

REV	DESCRIPTION	DATE

DRAWN BY: BDM

DESIGNED BY: LJS

PIPE & STRUCTURE TABLES

PORTLAND FORESIDE
DEVELOPMENT CO.
PORTLAND, ME 04102

PHASE 1 SITE PLAN SUBMISSION

JOB NO.: 0227007
DATE: NOVEMBER 2019
SCALE: N.T.S.
SHEET: 12 OF 17

C-106

NOT FOR CONSTRUCTION

\\woodardcurran.net\shared\Projects\0227007.07 PFDC - 58 Fore Block 1\wip\Drawings\Phase 1 - Site Plan Submission\0227007 Phase 1 Site Plan.dwg, Nov 08, 2019 - 2:05pm

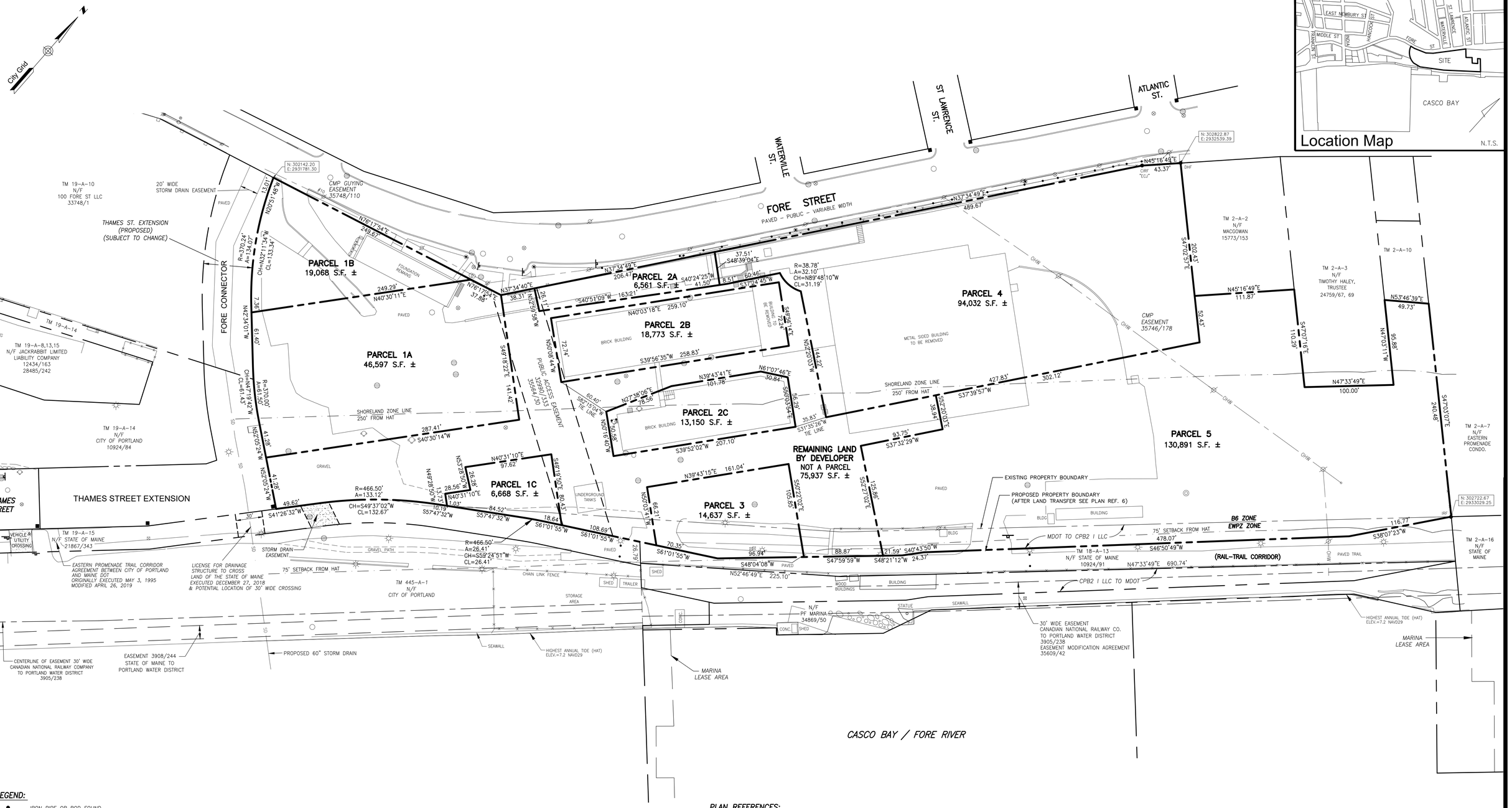

LEGEND:

- IRON PIPE OR ROD FOUND
- MONUMENT FOUND
- UTILITY POLE
- MANHOLE
- ELECTRIC/GAS METER
- SIGN
- CATCH BASIN
- HYDRANT
- WATER VALVE OR SHUTOFF
- GAS VALVE
- LIGHT POLE
- FENCE
- CURB
- GUARDRAIL
- IPF/IRF IRON PIPE OR ROD FOUND
- N/F NOW OR FORMERLY
- 000/000 DEED BOOK / PAGE

SCALE : 1" = 50'

0' 25' 50' 100'

APPROVED BY THE CITY OF PORTLAND PLANNING BOARD

DATE

GENERAL NOTES:

1. OWNER OF RECORD: CPB2 I LLC
   254 COMMERCIAL STREET SUITE 118, PORTLAND, ME 04101
   C.C.R.D. BOOK 31425 PAGE 267, BOOK 30879 PAGE 75, BOOK 35264 PAGE 268 & BOOK 35576 PAGE 153

2. PARCEL IS SHOWN AS 18–A001, 19–A003 & P/O 19–A010 ON THE CITY OF PORTLAND'S TAX ASSESSORS MAPS.

3. BEARINGS ARE BASED ON MAINE STATE PLANE COORDINATES WEST ZONE NAD83. CITY POINTS: T–113–80–206 N:302687.77 E:2932345.31
   T–113–12–111 N:302722.13 E:2933029.45

4. PARCEL IS LOCATED IN ZONE C, AREAS OF MINIMAL FLOODING, AND FLOOD ZONE A2 ELEV. 10, FLOOD INSURANCE RATE MAP 230051–0014B EFFECTIVE DATE JULY 17, 1986.

5. BENCH MARK: NATIONAL OCEANIC AND ATMOSPHERIC ADMINISTRATION (NOAA) – TIDAL BENCHMARK. BENCH MARK STAMPING: NO. 3 1971 ELEVATION 11.02 FEET CITY DATUM.

6. PARCEL IS LOCATED IN THE B6 URBAN COMMERCIAL BUSINESS ZONE AND PARTIALLY IN THE EWPZ WATERFRONT ZONE AS SHOWN ON THE CITY OF PORTLAND ZONING MAP.

PLAN REFERENCES:

1. LAND TITLE SURVEY & SUBDIVISION PLAN IN PORTLAND, MAINE U.S.A. MADE FOR THE TRUST FOR PUBLIC LAND, THE CITY OF PORTLAND, THE MAINE DEPARTMENT OF TRANSPORTATION, THE CANADIAN NATIONAL RAILWAY COMPANY DATED FEB. 19, 1993, REV. 9 11/04/96 BY OWEN HASKELL, INC. AND RECORDED IN PLAN BOOK 193, PAGE 187.

2. RECORDING PLAT OCEAN GATEWAY MADE FOR THE CITY OF PORTLAND AND STATE OF MAINE, BY OWEN HASKELL, INC, DATED AUGUST 4, 2004, RECORDED IN PLAN BOOK 204, PAGE 622–624

3. BOUNDARY & TOPOGRAPHY SURVEY AT 58 FORE STREET, PORTLAND, MAINE MADE FOR WOODARD & CURRAN BY OWEN HASKELL, INC. AUGUST 29, 2016, REVISED THROUGH FEB. 2019.

4. EXHIBIT PLAN PARCELS TO BE CONVEYED 58 FORE STREET, PORTLAND, MAINE MADE FOR WOODARD & CURRAN BY OWEN HASKELL, INC. DATED MARCH 21, 2018.

5. TOPOGRAPHIC SURVEY 100 FORE STREET MADE FOR JONATHAN COHEN BY OWEN HASKELL, INC DATED DECEMBER 4, 2017 REVISED THROUGH 12/17/18.

6. AMENDED SUBDIVISION PLAN, OCEAN GATEWAY, COMMERCIAL STREET, THAMES STREET & FORE STREET, PORTLAND, MAINE MADE FOR OWNER OF RECORD CITY OF PORTLAND JULY 17, 2019 BY OWEN HASKELL.

CERTIFICATE:

OWEN HASKELL, INC. HEREBY CERTIFIES THAT THIS PLAN IS BASED ON, AND THE RESULT OF, AN ON THE GROUND FIELD SURVEY AND THAT TO THE BEST OF OUR KNOWLEDGE, INFORMATION AND BELIEF, IT CONFORMS TO THE BOARD OF LICENSURE FOR PROFESSIONAL LAND SURVEYORS CURRENT STANDARDS OF PRACTICE.

DATE

RANDY R. LOUBIER, PLS #2407

Subdivision Plat
Portland Foreside
Thames Street & Fore Street
Portland, Maine
Made for Owner of Record
CPB2 I LLC
254 Commercial St. Suite 118, Portland, ME 04101

OWEN HASKELL, INC.
PROFESSIONAL LAND SURVEYORS
390 U.S. ROUTE ONE, UNIT 10, FALMOUTH, MAINE 04105

DRAWN BY: RRL / JLW	DATE: NOV. 4, 2019	JOB NO. 2019-013 P	
CHECKED BY: RRL	SCALE: 1" = 50'	DRWG. NO. SP-B	

42x30 SHEET
1:1

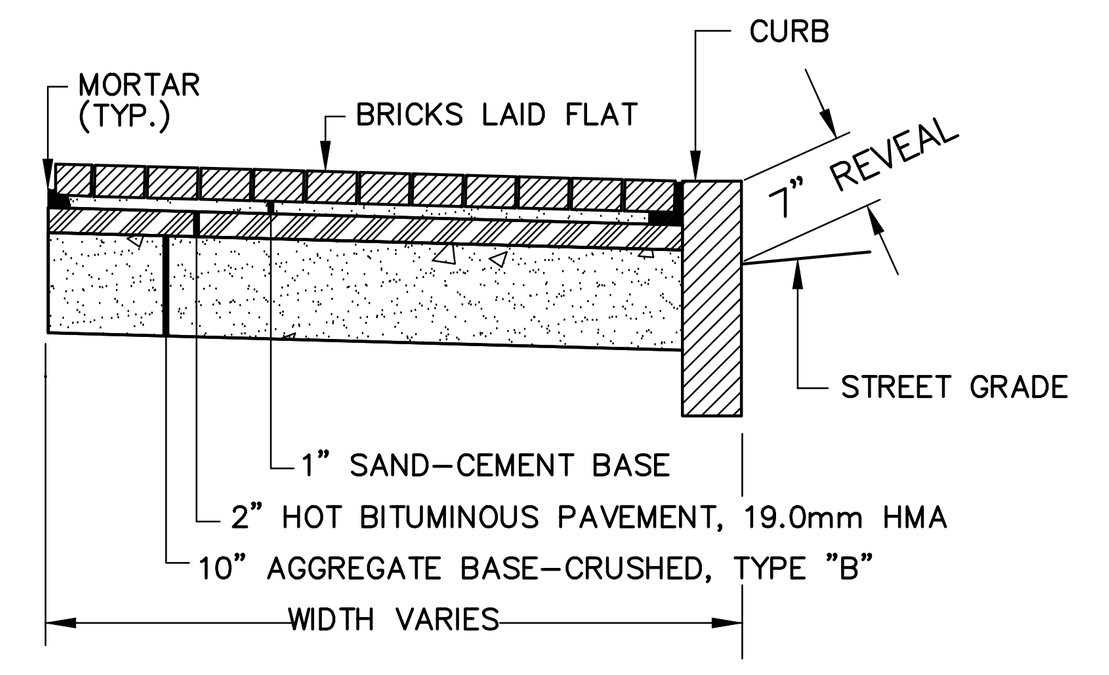

SECTION

BRICK SIDEWALK DETAIL
N.T.S.

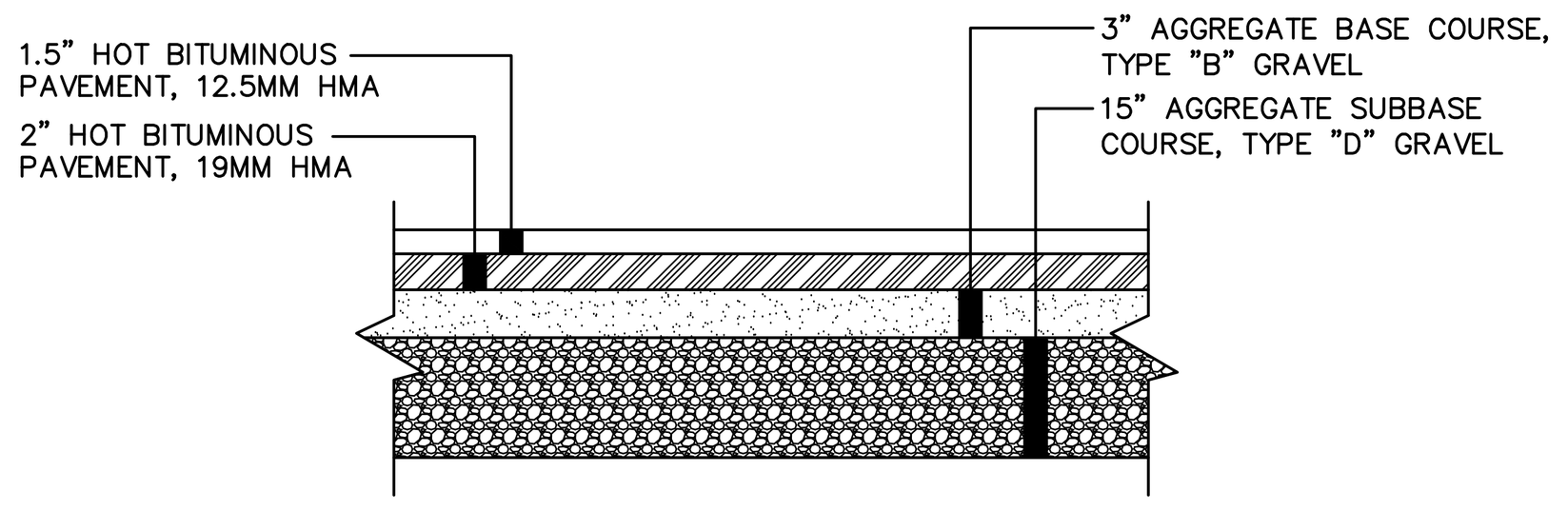

THAMES ST. PAVED ROAD & SITE PAVEMENT SECTION
N.T.S.

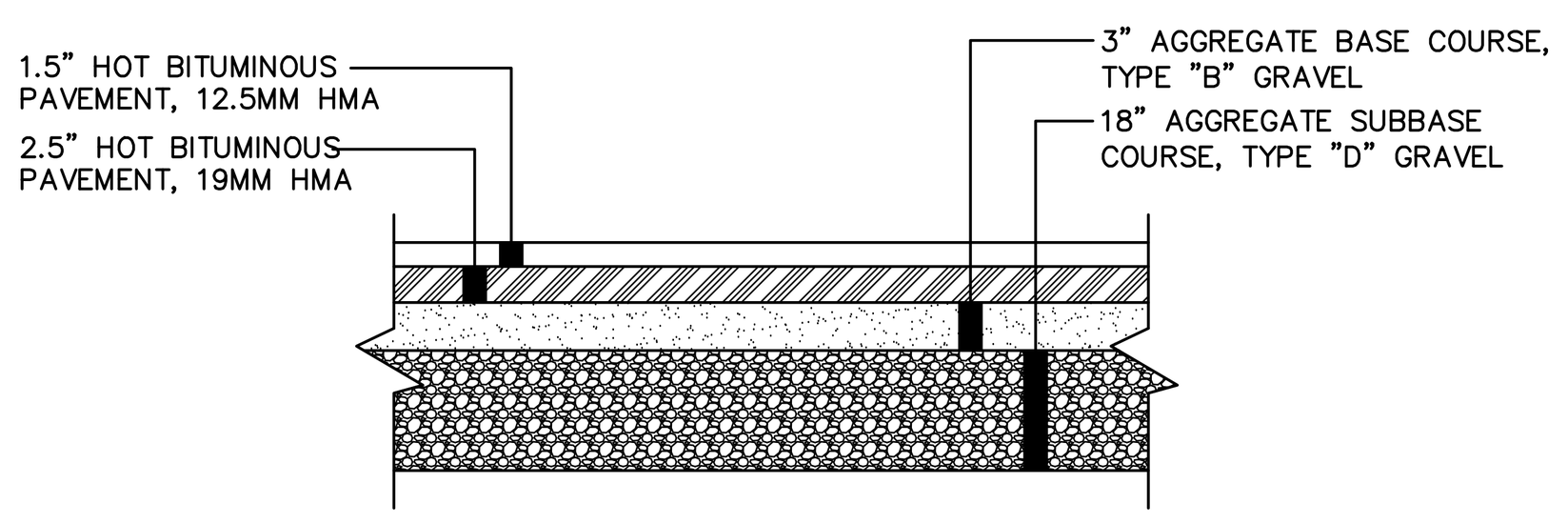

FORE ST. PAVED ROAD SECTION
N.T.S.

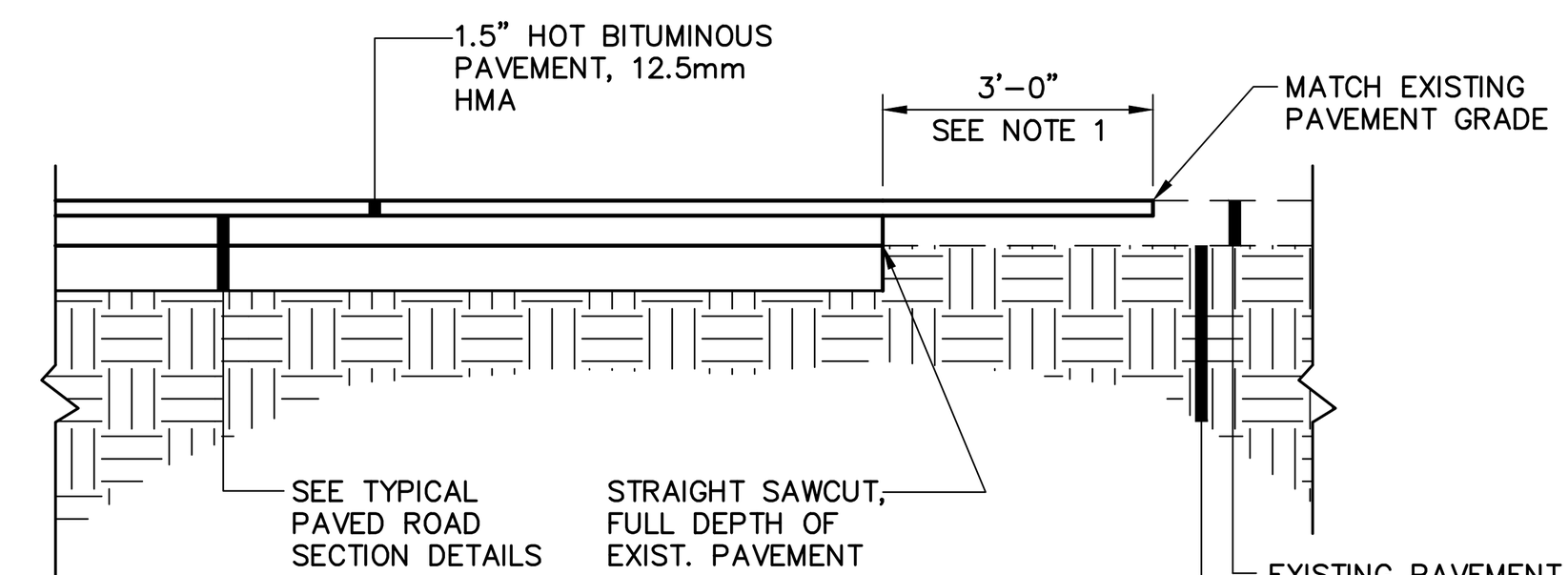

NOTES:

1. GRIND EXISTING PAVEMENT, TO 1.5" DEPTH.
2. PROVIDE BITUMINOUS TACK COAT ON VERTICAL AND HORIZONTAL SURFACES PRIOR TO PAVING.
3. DETAIL APPLICABLE TO PAVEMENT BUTT JOINTS AT ROADWAY WORK LIMITS. REFER TO PIPE INSTALLATION DTL. OR PAVED ROAD SECTION DTLS. FOR TRENCH REPAIR REQUIREMENTS.

PAVEMENT BUTT JOINT DETAIL
N.T.S.

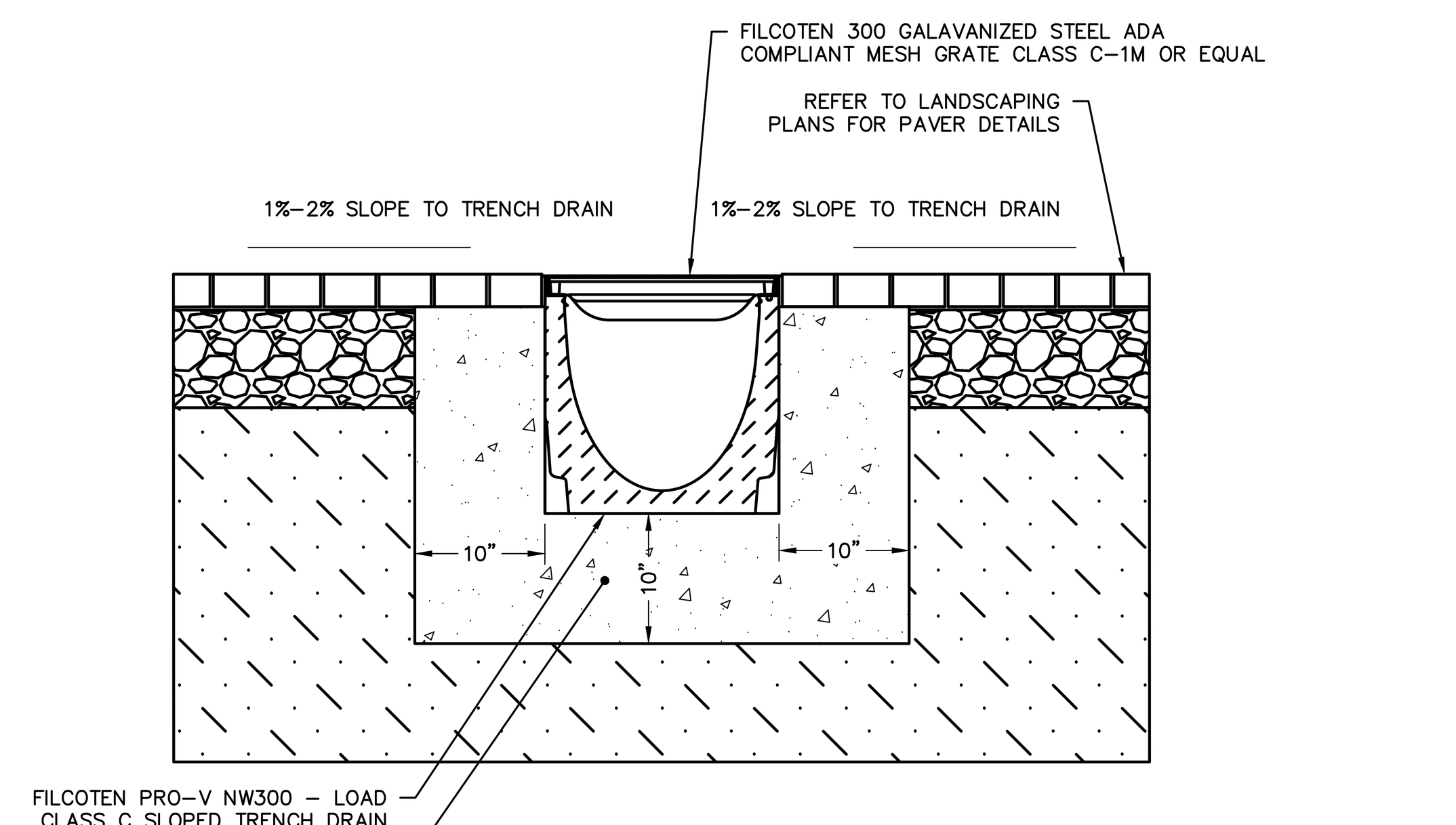

SECTION WITH HIDDEN CONCRETE

GENERAL NOTES
THE SURFACE DRAINAGE SYSTEM SHALL BE FILCOTEN FIBER COMPOSITE NW300 CHANNEL SYSTEM WITH CONCRETED EDGE MADE OF GALVANIZED STEEL RAILS AS MANUFACTURED BY BG GRASPOINTNER, INC AND DISTRIBUTED BY HYDRO BG USA INC., A WHOLLY OWNED SUBSIDIARY, OR APPROVED EQUAL.

MATERIALS
CHANNELS SHALL BE MANUFACTURED FROM FILCOTEN FIBER COMPOSITE WITH CONCRETED EDGE GALVANIZED STEEL RAIL. MINIMUM PROPERTIES OF FILCOTEN FIBER COMPOSITE WILL BE AS FOLLOWS:

COMPRESSIVE STRENGTH:	11,700 PSI
FLEXURAL STRENGTH:	1,700 PSI
FREE OF RELEASE AGENTS:	YES
WATER ABSORPTION SUFFICIENT FOR ADHESION WITH CONCRETE SURFACES:	YES
NON FLAMMABLE:	YES
U/V RESISTANT:	YES
RECYCLABLE 100%:	YES
DILUTE ACID AND ALKALI RESISTANT:	YES
FROST THAW SALT TESTED AS PER EN1433 WITH A TEST TEMPERATURE UP TO –40°C (–40°F):	YES
MATERIAL FREE OF VOC, BIOCIDES, HEAVY METALS:	YES

THE SYSTEM SHALL BE 12" (300MM) NOMINAL INTERNAL WIDTH WITH 3 HEIGHTS 14.17" (360MM), 16.20" (410MM) AND 18.11" (460MM). ALL CHANNELS ARE EQUIPPED WITH INTERLOCKING CONNECTION MALE/FEMALE AND SEALANT JOINT.

THE COMPLETE DRAINAGE SYSTEM SHALL BE BY HYDRO BG USA, INC. ANY DEVIATION OR PARTIAL SYSTEM DESIGN AND/OR IMPROPER INSTALLATION WILL VOID ANY AND ALL WARRANTIES PROVIDED BY HYDRO BG USA, INC.

CHANNEL SHALL WITHSTAND LOADING TO PROPER LOAD CLASS AS OUTLINED BY EN 1433. GRATE TYPE SHALL BE APPROPRIATE TO MEET THE SYSTEM LOAD CLASS SPECIFIED AND INTENDED APPLICATION. GRATES SHALL BE SECURED USING 4–POINT BOLTING LOCKING SYSTEM. CHANNEL AND GRATE SHALL BE CERTIFIED TO MEET THE SPECIFIED EN 1433 LOAD CLASS. THE SYSTEM SHALL BE INSTALLED IN ACCORDANCE WITH THE MANUFACTURER'S INSTRUCTIONS AND RECOMMENDATIONS.

OPTIONS (TO BE APPROVED BY OWNER)
THE CONCRETE ENCASEMENT MAY BE EXTENDED TO THE SURFACE TO PROVIDE ADDITIONAL DURABILITY AGAINST SNOW PLOWS.

A HEATING CABLE MAY BE INSTALLED ON THE EXTERIOR OF THE TRENCH DRAIN OR WITHIN THE CONCRETE ENCASEMENT TO PREVENT ICE BUILD–UP.

TRENCH DRAIN DETAIL
N.T.S.

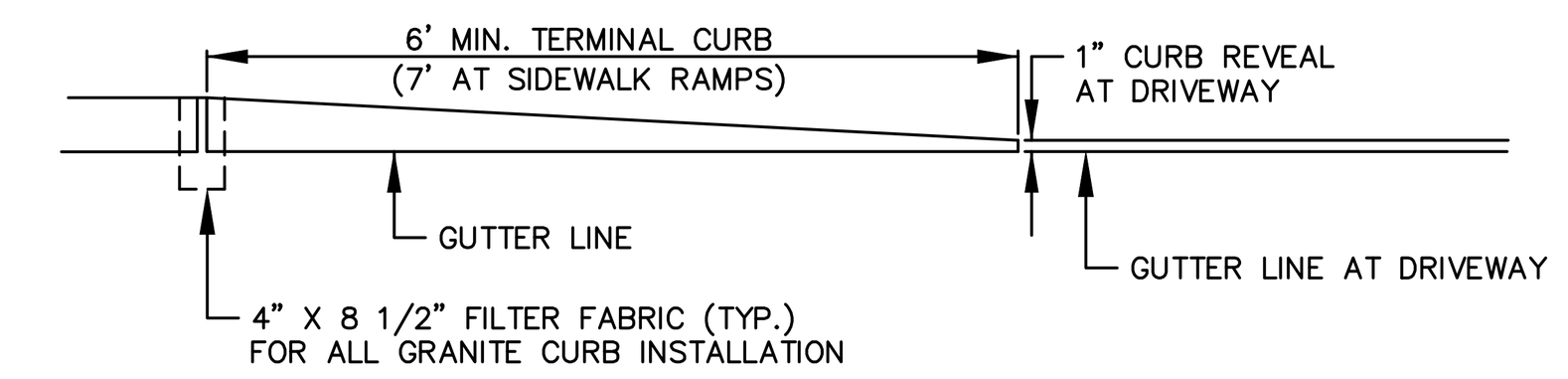

TERMINAL CURB PROFILE

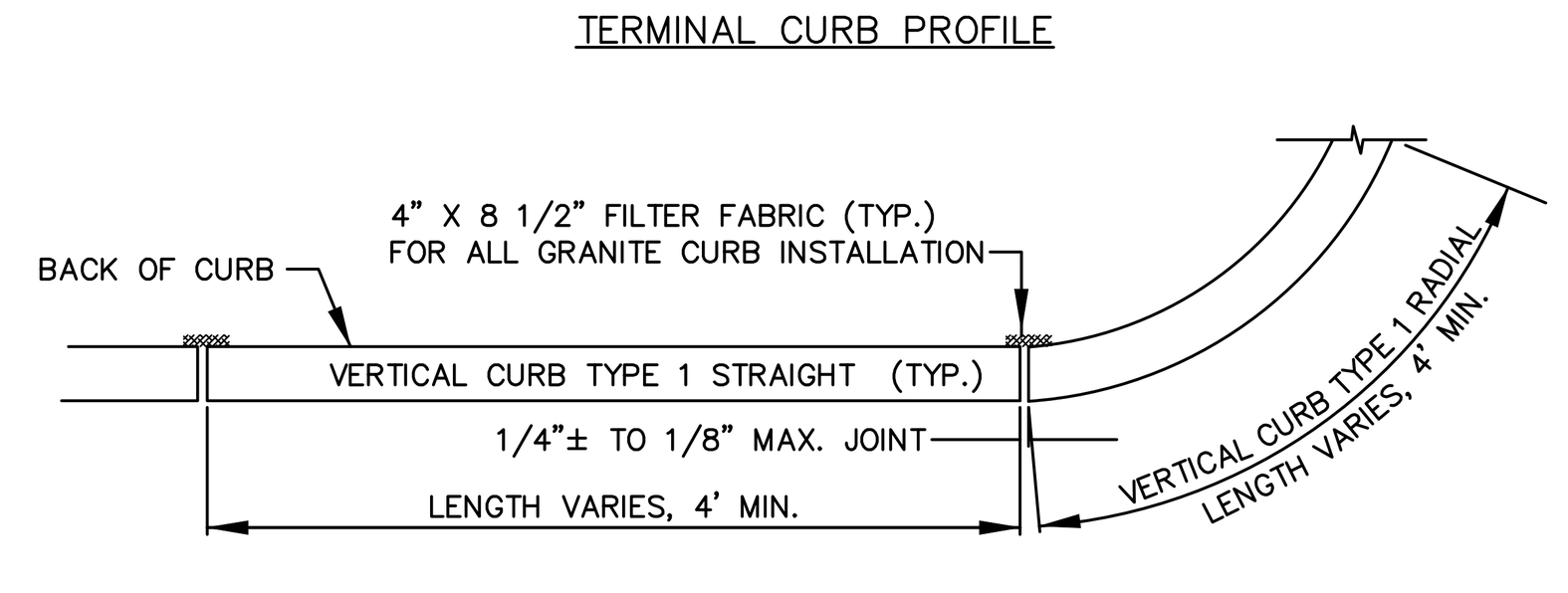

VERTICAL GRANITE CURB PLAN VIEW

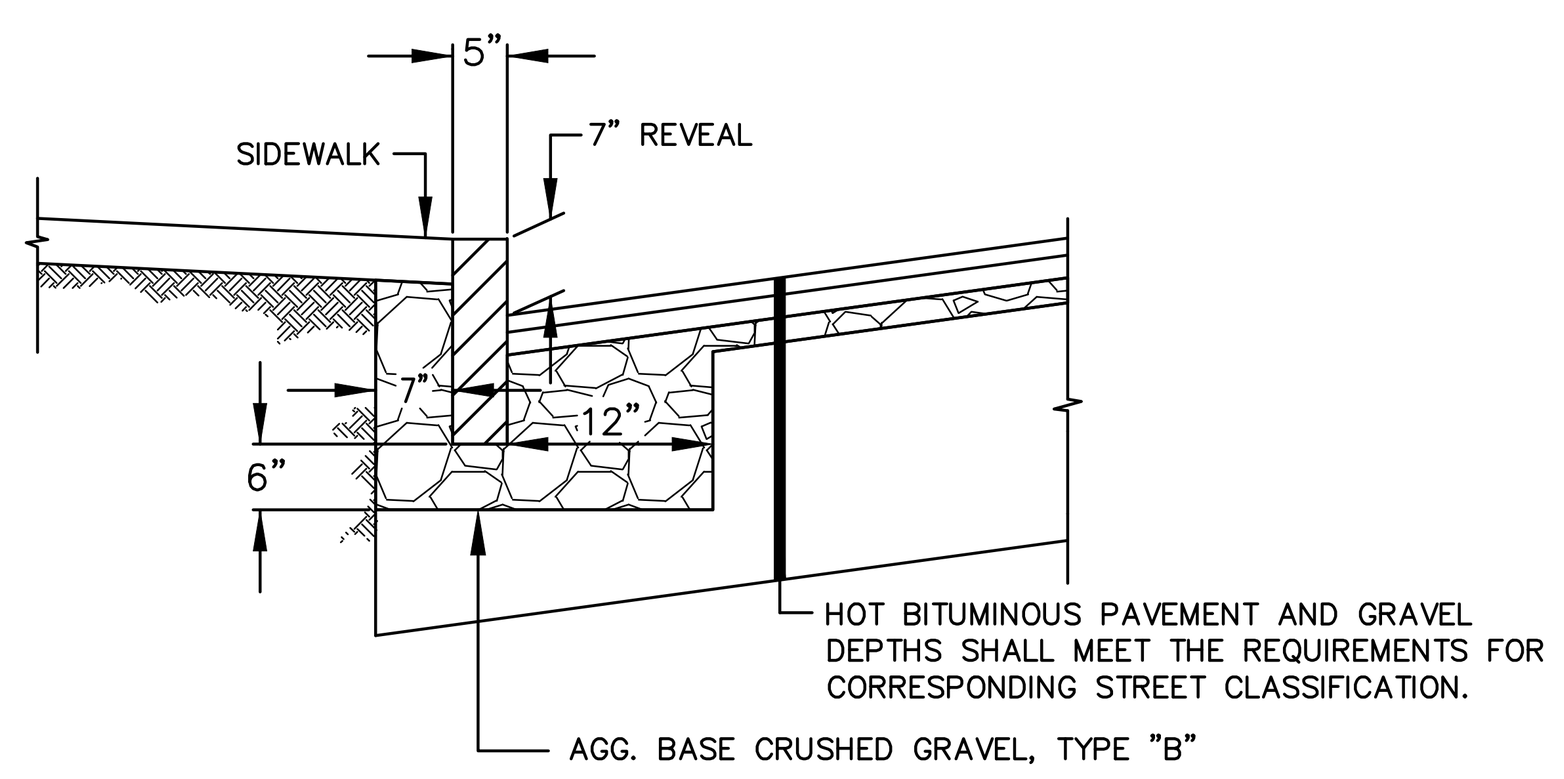

VERTICAL GRANITE CURB CROSS SECTION

VERTICAL GRANITE CURB
N.T.S.

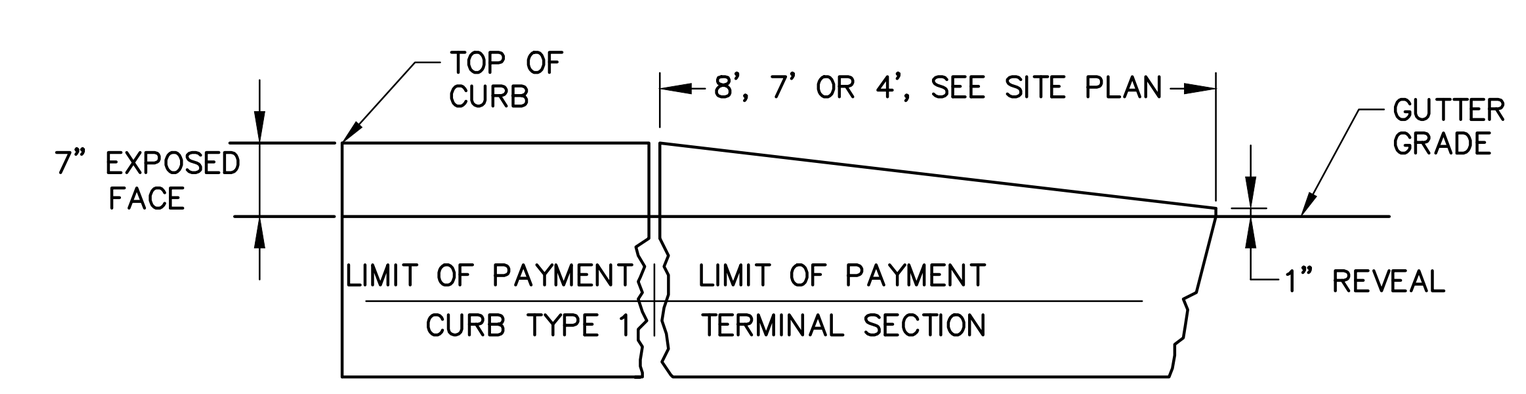

TERMINAL SECTION TYPE "1"

TERMINAL CURB SECTION
N.T.S.

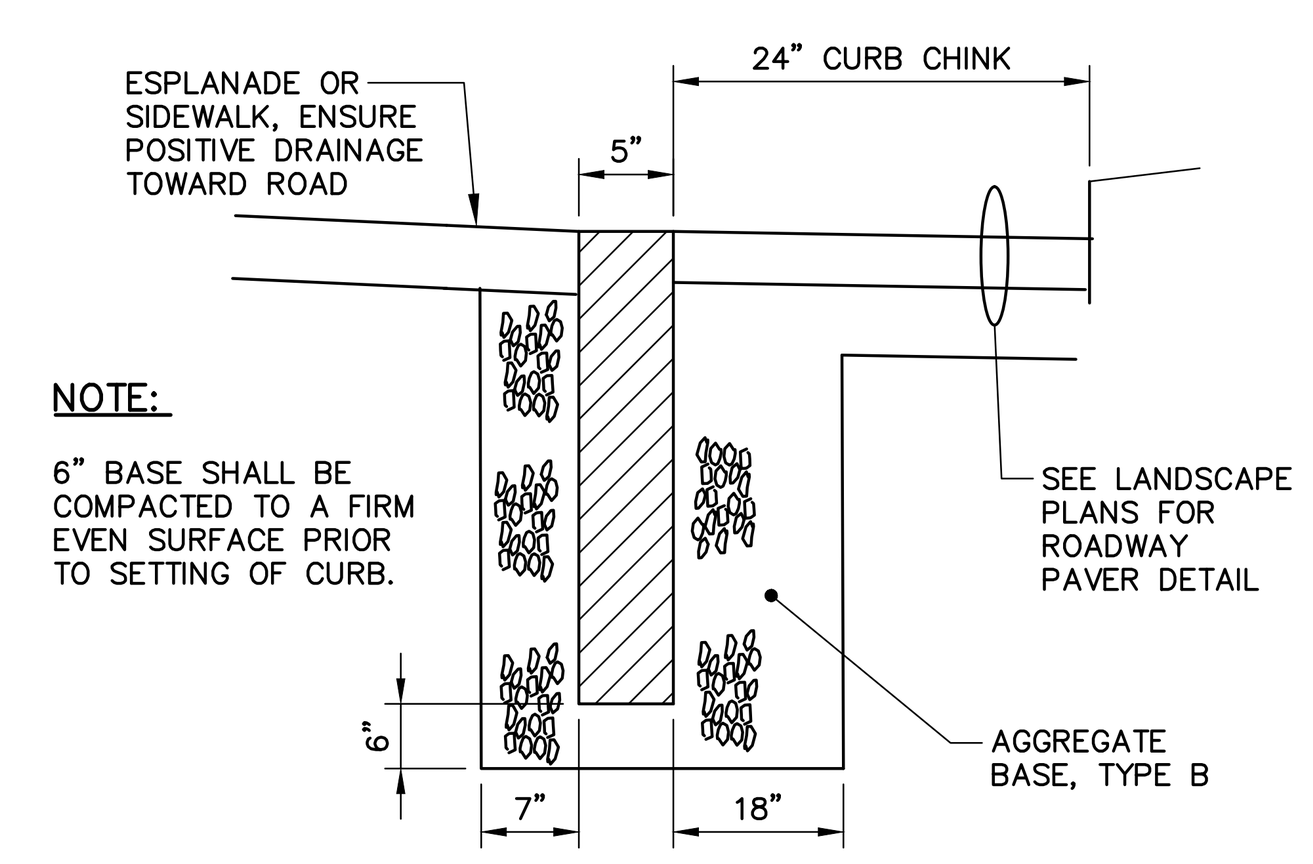

NOTE:
6" BASE SHALL BE COMPACTED TO A FIRM EVEN SURFACE PRIOR TO SETTING OF CURB.

SECTION

TYPICAL FLUSH CURB INSTALLATION
N.T.S.

NOTE: AGGREGATE TYPES PER MDOT SECTION 304.02

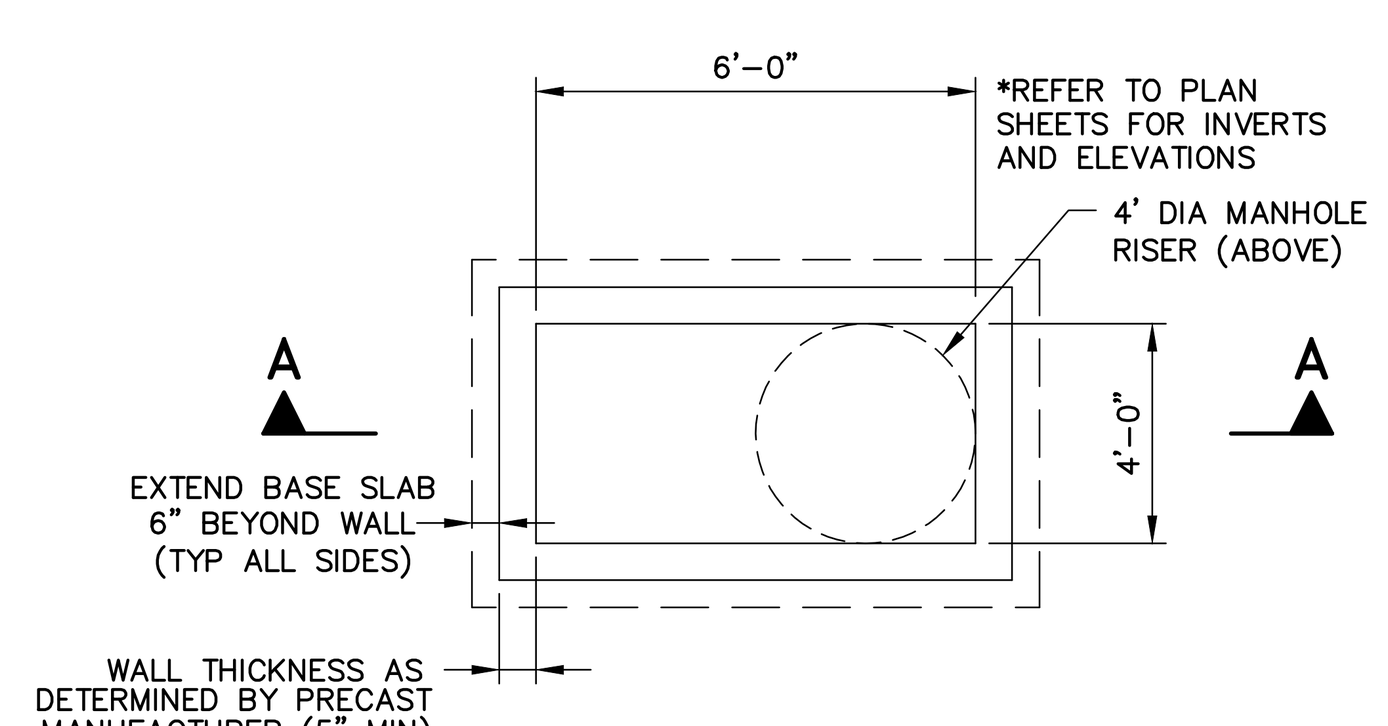

PLAN

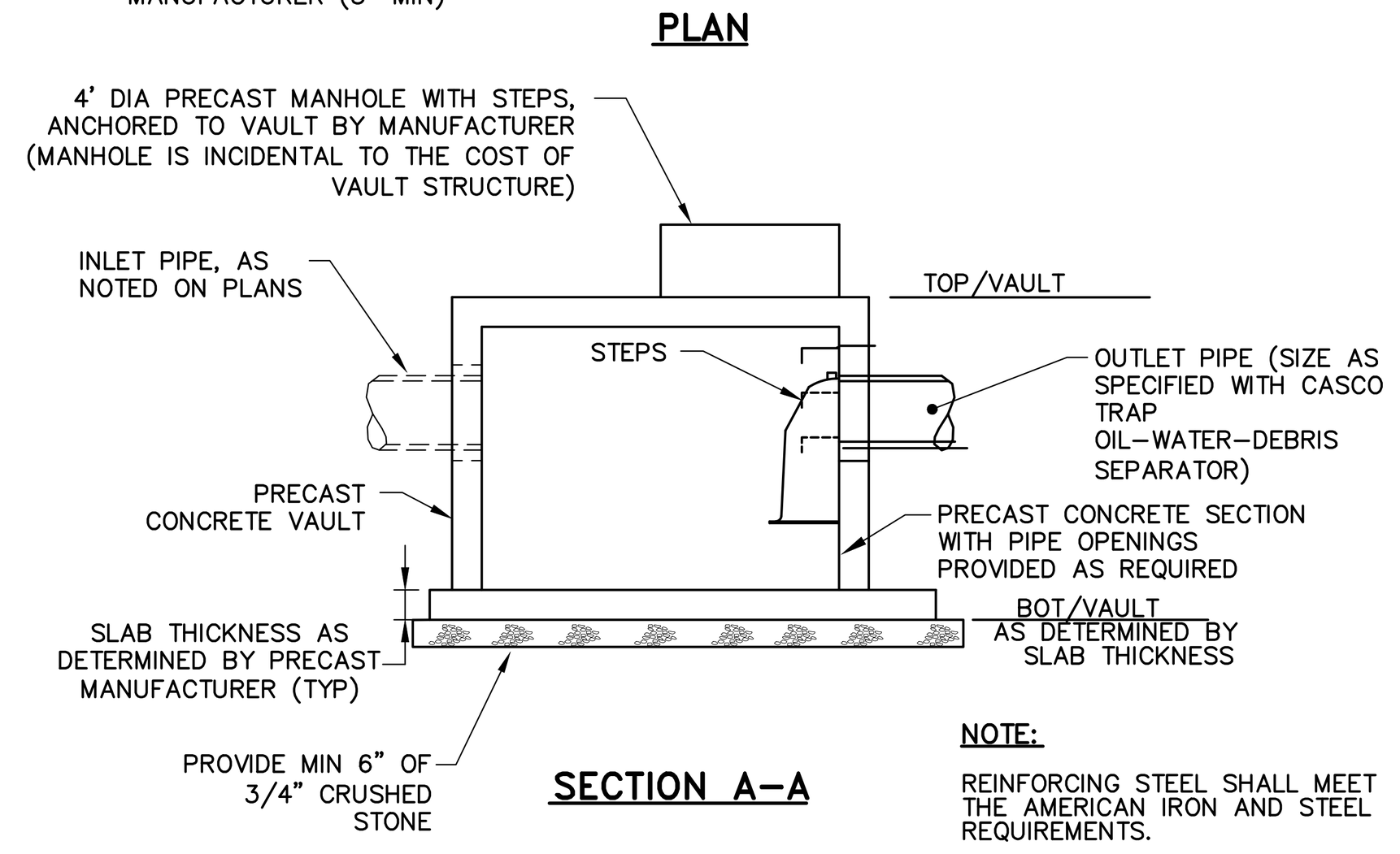

SECTION A–A

NOTE:
REINFORCING STEEL SHALL MEET THE AMERICAN IRON AND STEEL REQUIREMENTS.

PRECAST 8'X6' CONCRETE VAULT
N.T.S.

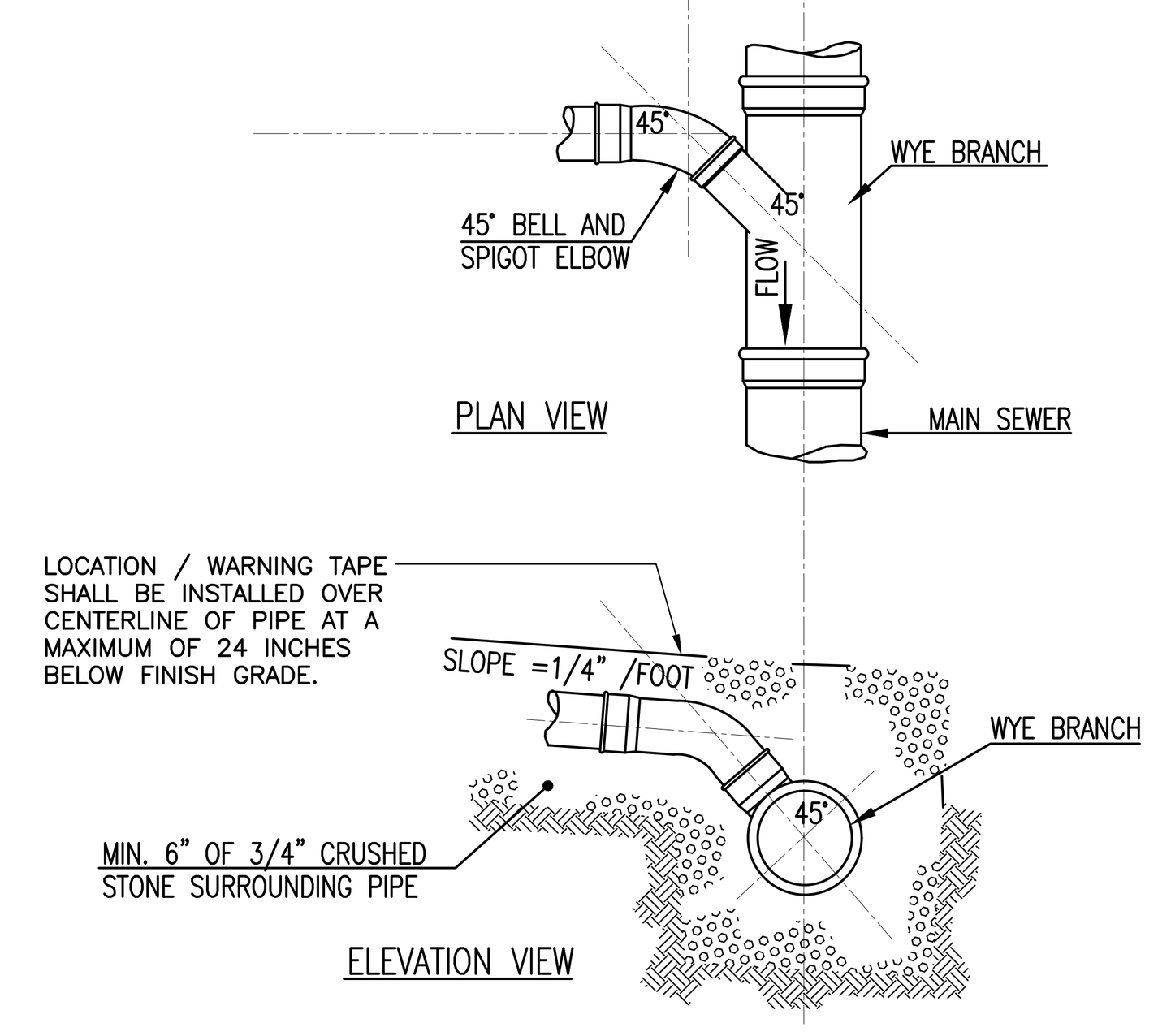

TYPICAL SEWER LATERAL WYE CONNECTION DETAILS
N.T.S.

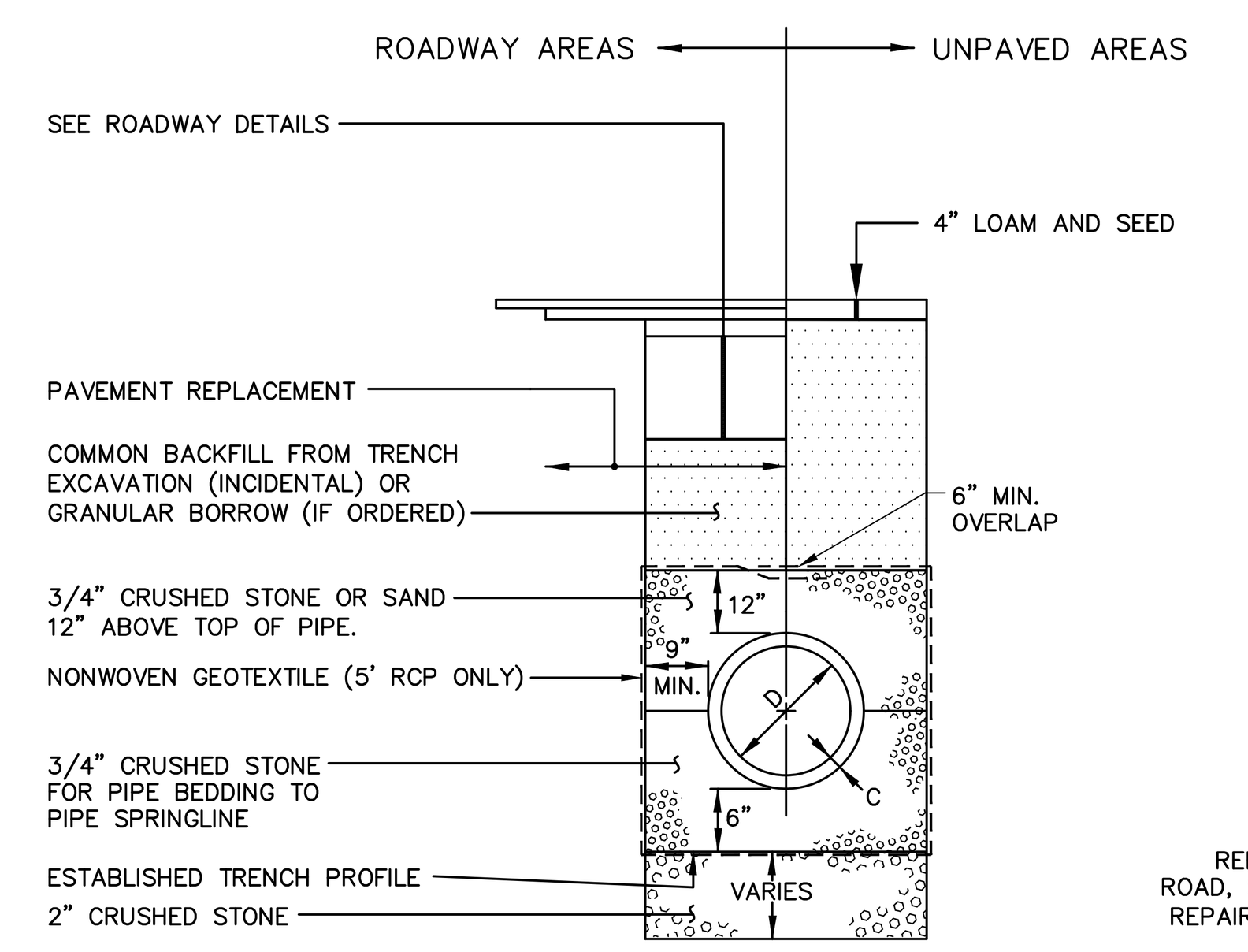

NOTES:
DEPTH OF BITUMINOUS PAVEMENT AND AGGREGATE COURSES SHALL BE DETERMINED BY STREET CLASSIFICATION. SEE OTHER DETAILS.

TYPICAL STORMDRAIN/ SEWER PIPE TRENCH INSTALLATION
N.T.S.

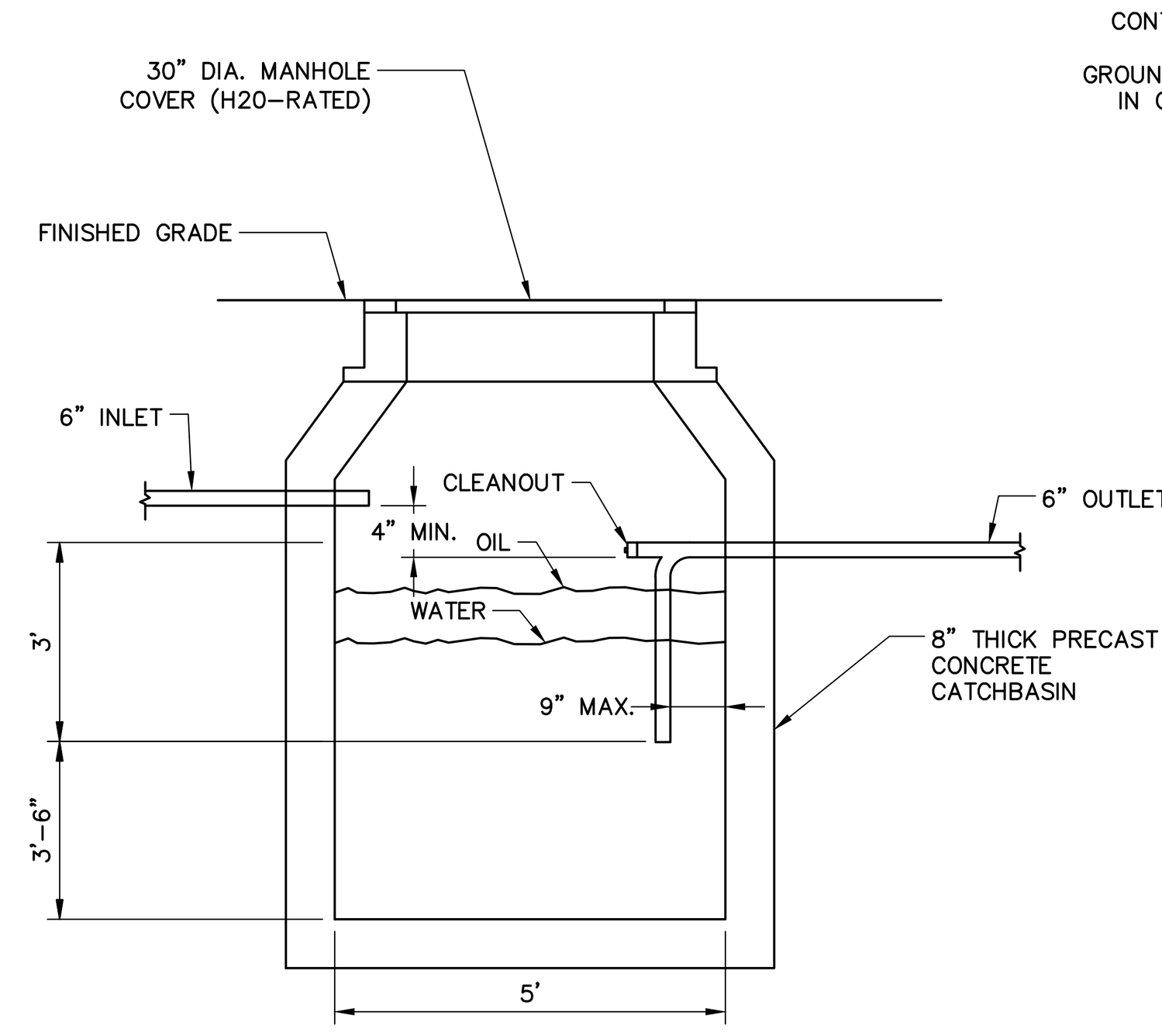

OIL WATER SEPARATOR
N.T.S.

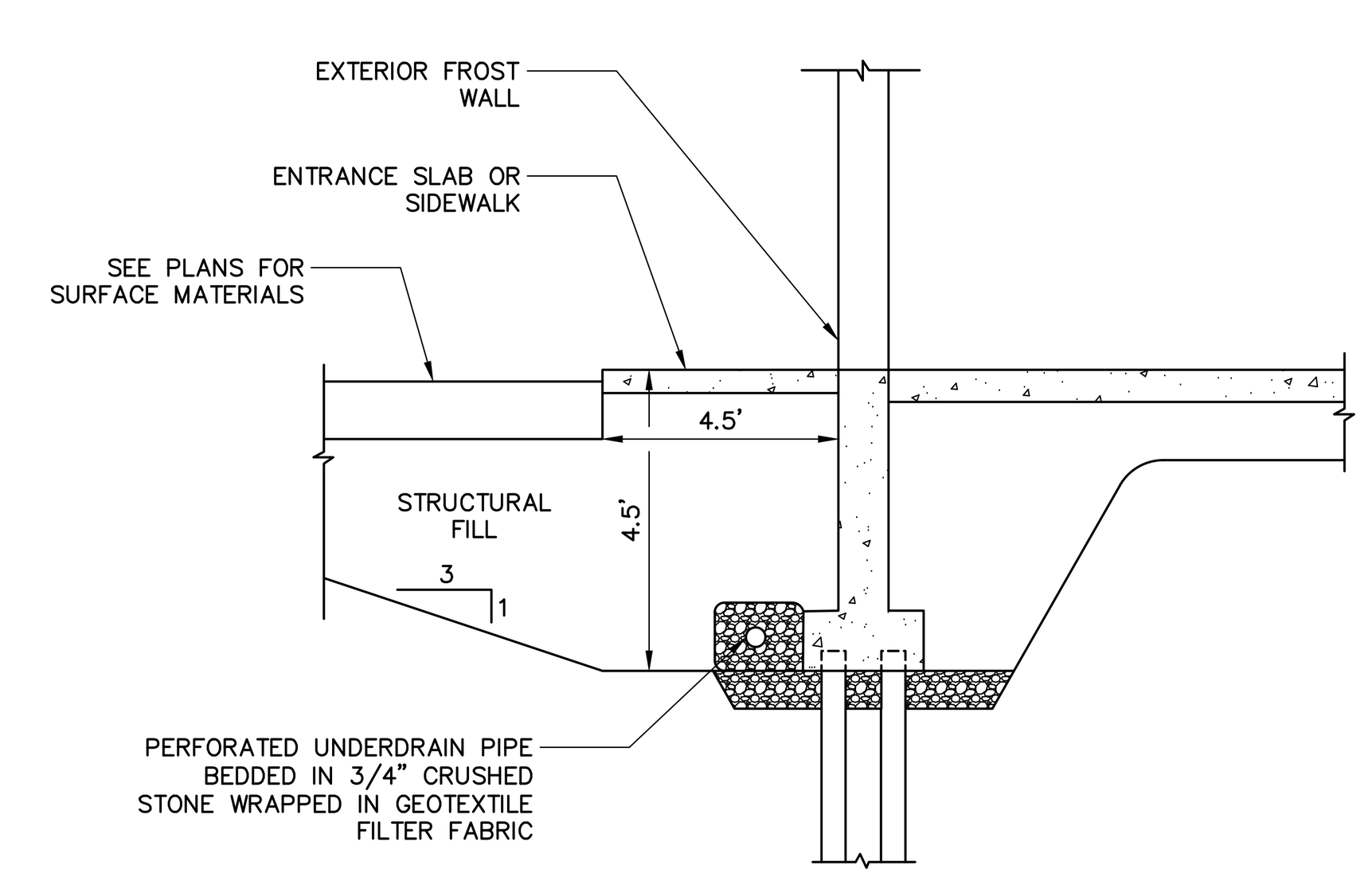

NOTE: APPLIES TO ALL MAN DOOR LOCATIONS

FROST PROTECTION AT DOORWAY ENTRANCES
N.T.S.

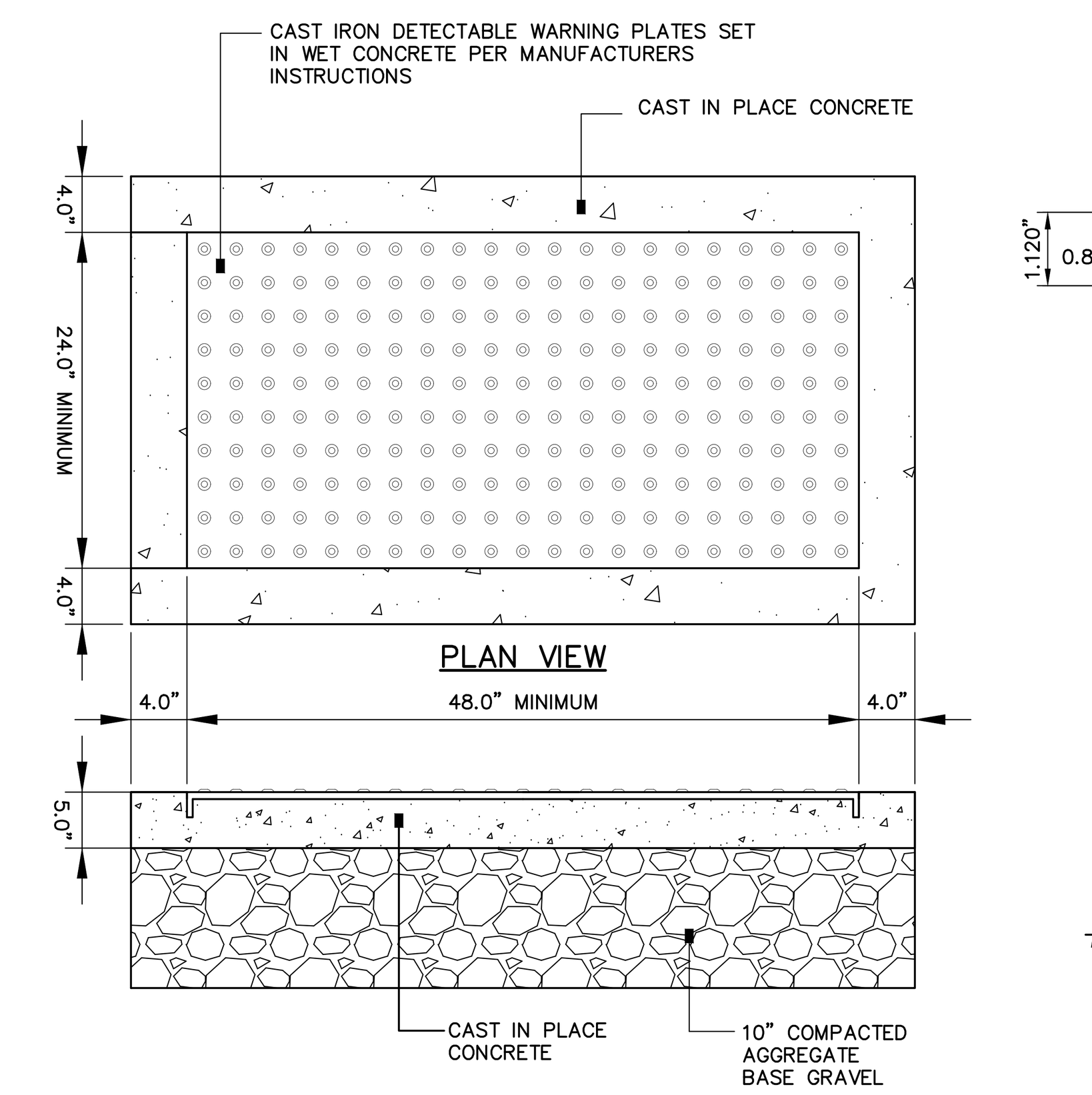

SIDEWALK RAMP DETECTABLE WARNING
N.T.S.

NOTES:

1. ALL DETECTABLE WARNING PLATES SHALL BE UNCOATED CAST IRON. FOLLOW MANUFACTURER'S INSTRUCTIONS FOR INSTALLATION.
2. CAST IN PLACE CONCRETE SHALL MEET SPECIFICATIONS FOR MAINE D.O.T. CLASS A STRUCTURAL CONCRETE, MINIMUM COMPRESSIVE STRENGTH 4,000 PSI. THE EXPOSED CONCRETE BORDER SHALL RECEIVE A UNIFORM BROOM FINISH PERPENDICULAR TO THE FLOW OF PEDESTRIAN TRAFFIC.
3. TRUNCATED DOMES SHALL BE ALIGNED IN ROWS, PARALLEL AND PERPENDICULAR TO THE PREDOMINANT DIRECTION OF TRAVEL. TRUNCATED DOME BRICKS AND GRANITE PAVERS ARE NOT ALLOWED.
4. SIZE: THE DETECTABLE WARNING PLATES SHALL EXTEND 24 INCHES MINIMUM IN THE DIRECTION OF TRAVEL AND THE PLATE WIDTH AND CONCRETE SHALL EXTEND THE WIDTH OF THE CURB RAMP, LANDING, OR BLENDING TRANSITION TO THE STREET.
5. ORIENTATION: THE DETECTABLE WARNING PANEL SHALL BE LOCATED SO THAT THE EDGE NEAREST THE CURB LINE IS 6 INCHES MINIMUM AND 8 INCHES MAXIMUM FROM THE CURB LINE. THE PANEL SHALL BE ORIENTED TO THE DIRECTION OF TRAVEL AS IDENTIFIED BY THE POINT OF EGRESS.

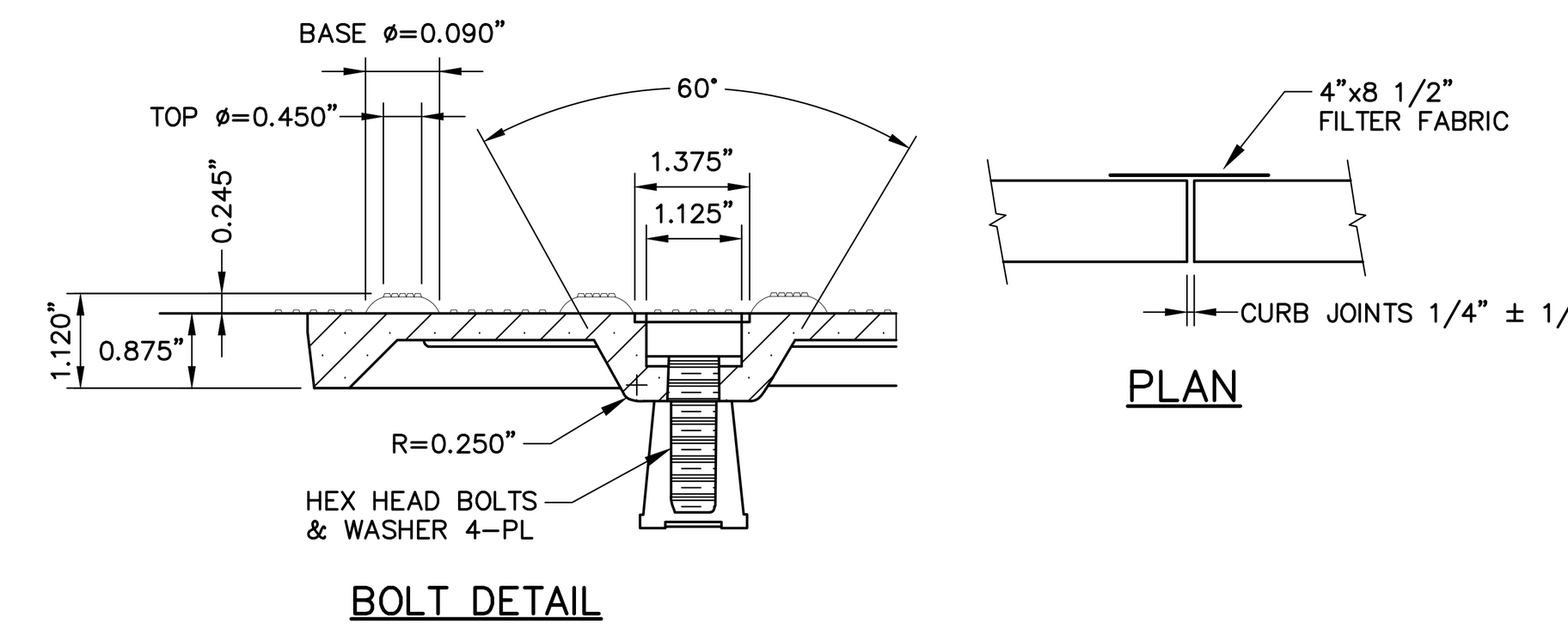

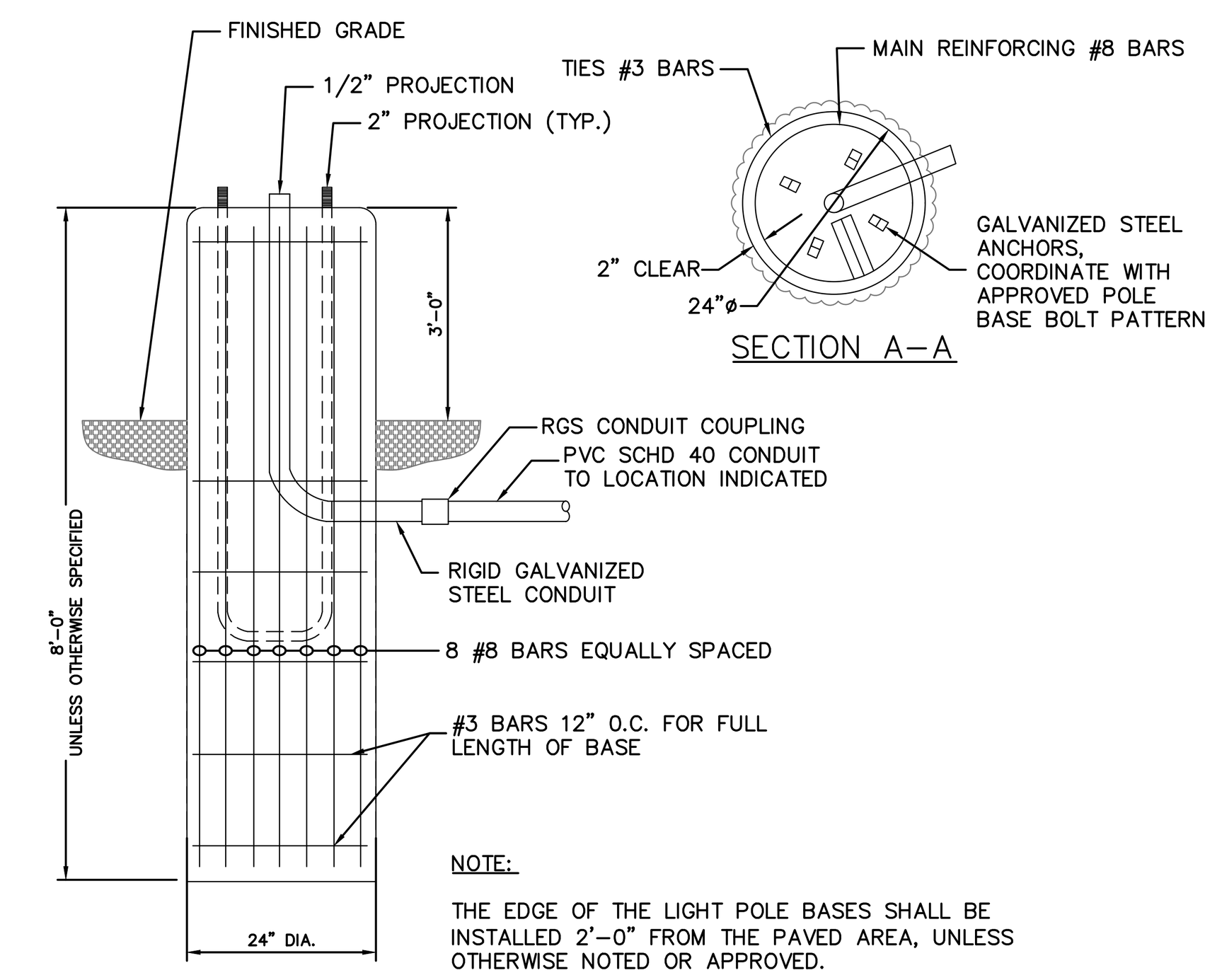

NOTE:
THE EDGE OF THE LIGHT POLE BASES SHALL BE INSTALLED 2'–0" FROM THE PAVED AREA, UNLESS OTHERWISE NOTED OR APPROVED.

LIGHT POLE BASE DETAIL
N.T.S.

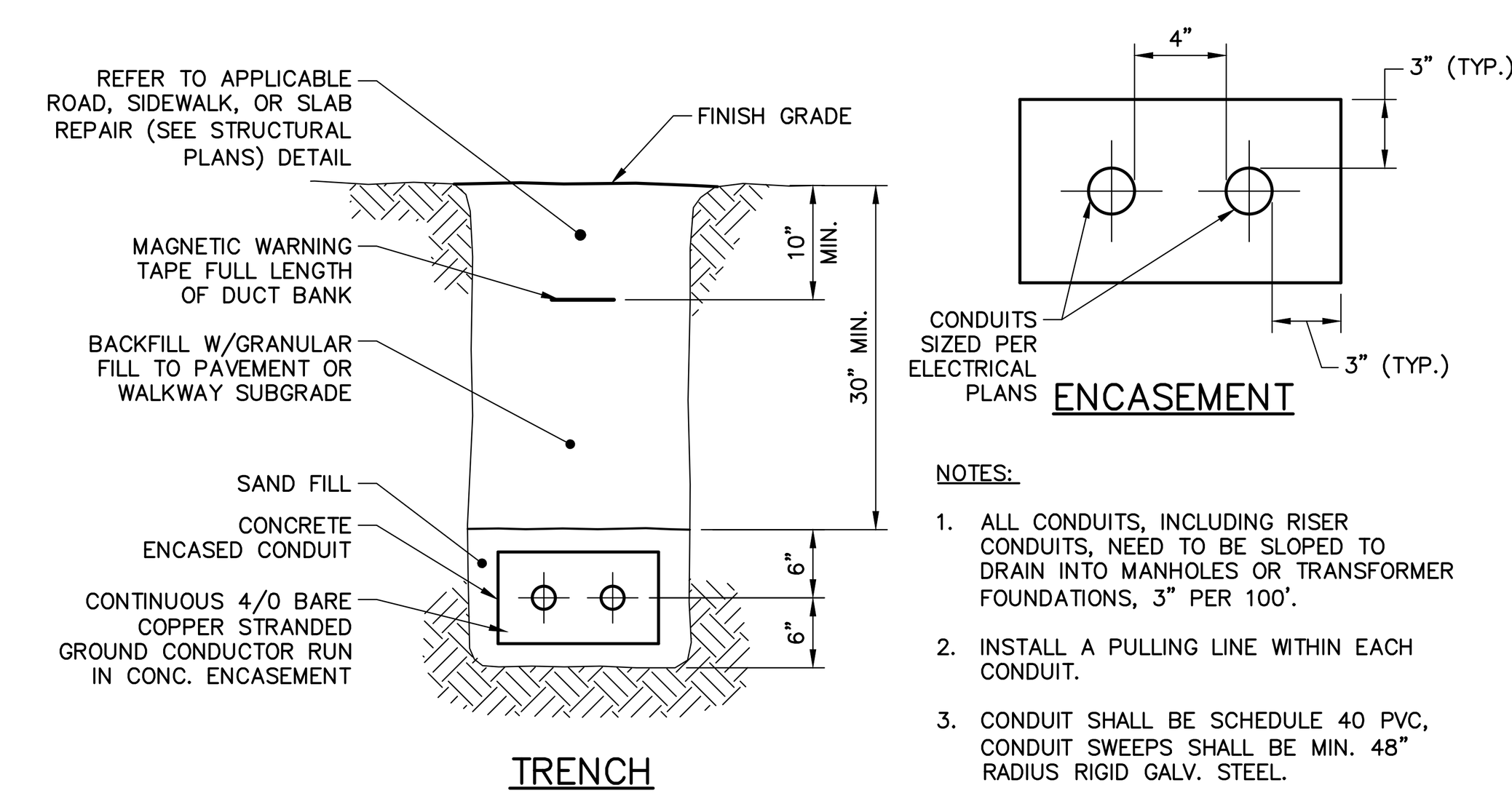

NOTES:

1. ALL CONDUITS, INCLUDING RISER CONDUITS, NEED TO BE SLOPED TO DRAIN INTO MANHOLES OR TRANSFORMER FOUNDATIONS, 3" PER 100'.
2. INSTALL A PULLING LINE WITHIN EACH CONDUIT.
3. CONDUIT SHALL BE SCHEDULE 40 PVC, CONDUIT SWEEPS SHALL BE MIN. 48" RADIUS RIGID GALV. STEEL.

BURIED ELECTRICAL CONDUIT DETAIL
N.T.S.

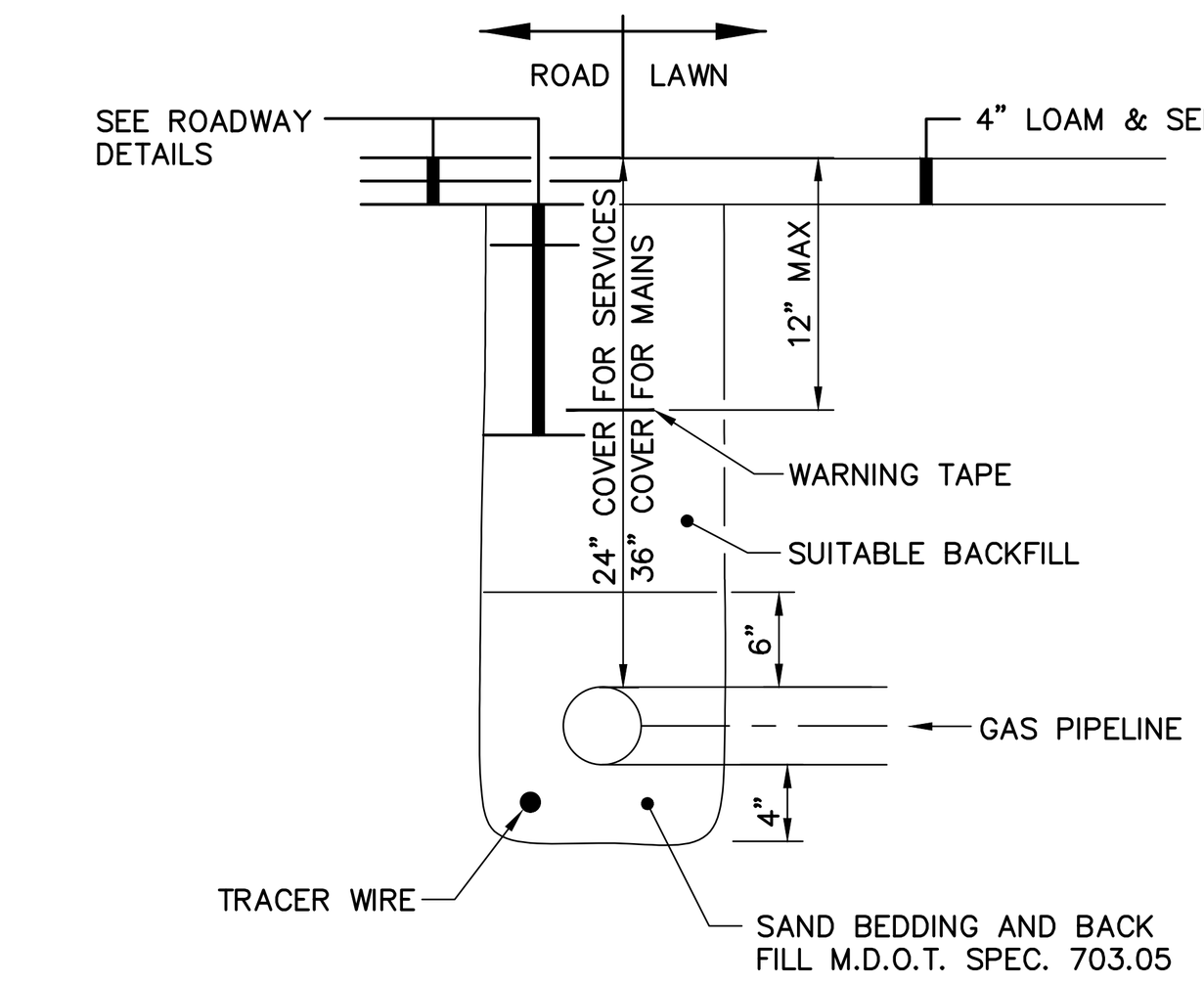

NATURAL GAS PIPE
N.T.S.

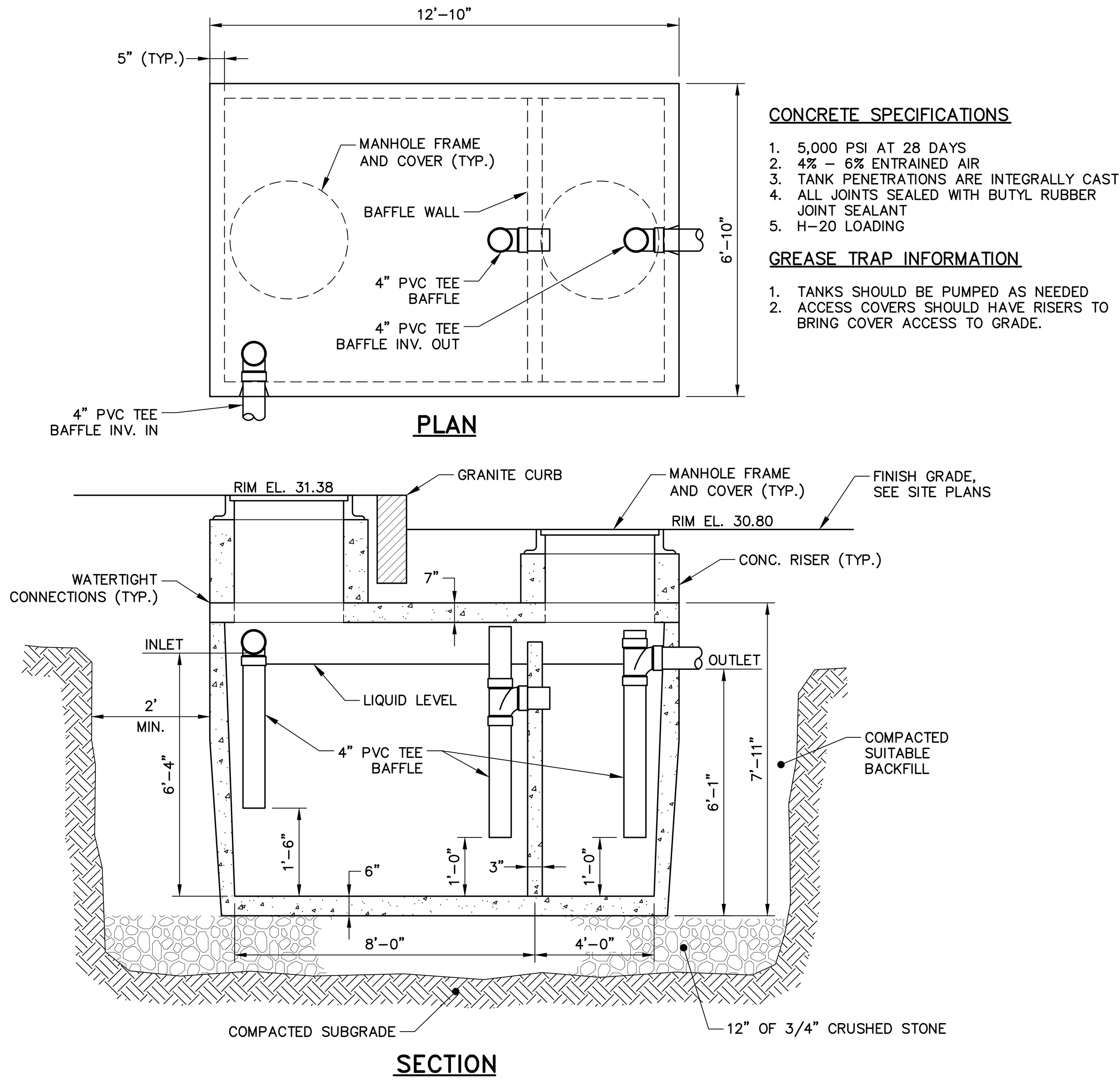

CONCRETE SPECIFICATIONS

1. 5,000 PSI AT 28 DAYS
2. 4% – 6% ENTRAINED AIR
3. TANK PENETRATIONS ARE INTEGRALLY CAST
4. ALL JOINTS SEALED WITH BUTYL RUBBER JOINT SEALANT
5. H–20 LOADING

GREASE TRAP INFORMATION

1. TANKS SHOULD BE PUMPED AS NEEDED
2. ACCESS COVERS SHOULD HAVE RISERS TO BRING COVER ACCESS TO GRADE.

3,000 GALLON EXTERNAL GREASE TRAP DETAIL
N.T.S.

NOT FOR CONSTRUCTION

WOODARD & CURRAN
41 Hutchins Drive
Portland, Maine 04102
800.426.4262 | www.woodardcurran.com
COMMITMENT & INTEGRITY DRIVE RESULTS

THIS DOCUMENT IS THE PROPERTY OF WOODARD & CURRAN INC. AND ITS CLIENT. REPRODUCTION OR MODIFICATION WITHOUT WRITTEN PERMISSION IS PROHIBITED.

STATE OF MAINE
LAUREN JANE SWETT
No. 12284
LICENSED PROFESSIONAL ENGINEER

REV	DESCRIPTION	DATE
	0227007 PHASE 1 DETAILS*.dwg	

CHECKED BY: DLC

REV	DESCRIPTION	DATE

DESIGNED BY: LJS
DRAWN BY: BCM

CIVIL DETAILS - 1

PORTLAND FORESIDE DEVELOPMENT CO.
PORTLAND, ME 04102

PHASE 1 SITE PLAN SUBMISSION

JOB NO.: 0227007
DATE: NOVEMBER 2019
SCALE: AS NOTED
SHEET: 13 OF 17

C-200

\\woodardcurran.net\shared\Projects\0227007.07 PFDC – 58 Fore Block 1\wip\Drawings\Phase 1 – Site Plan Submission\0227007 Phase 1 Details.dwg, Nov 08, 2019 – 2:06pm

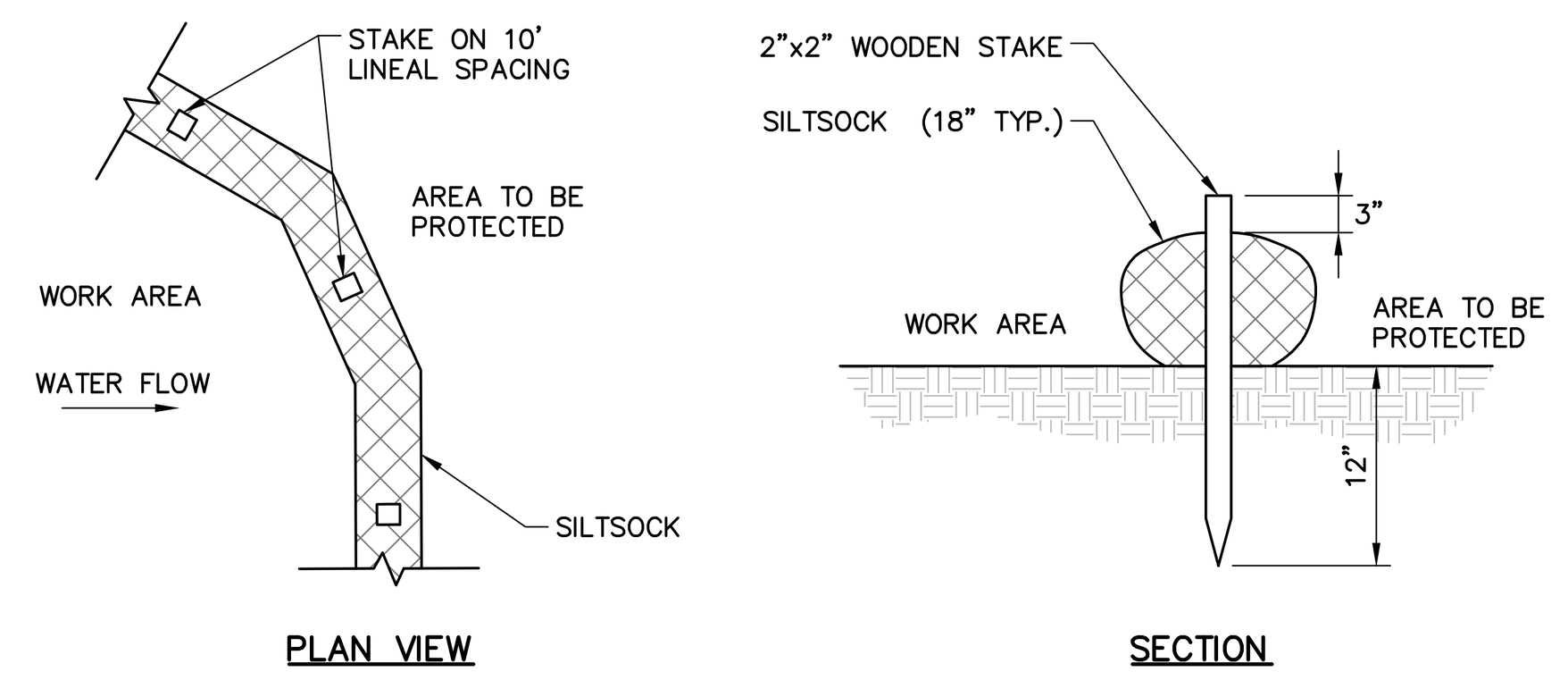

NOTE:

1. WHEN STAKING IS NOT POSSIBLE, HEAVY CONCRETE BLOCKS SHALL BE USED BEHIND THE SEDIMENT BARRIER TO HELP STABILIZE DURING RAINFALL/RUNOFF EVENTS.

SILT SOCK

N.T.S.

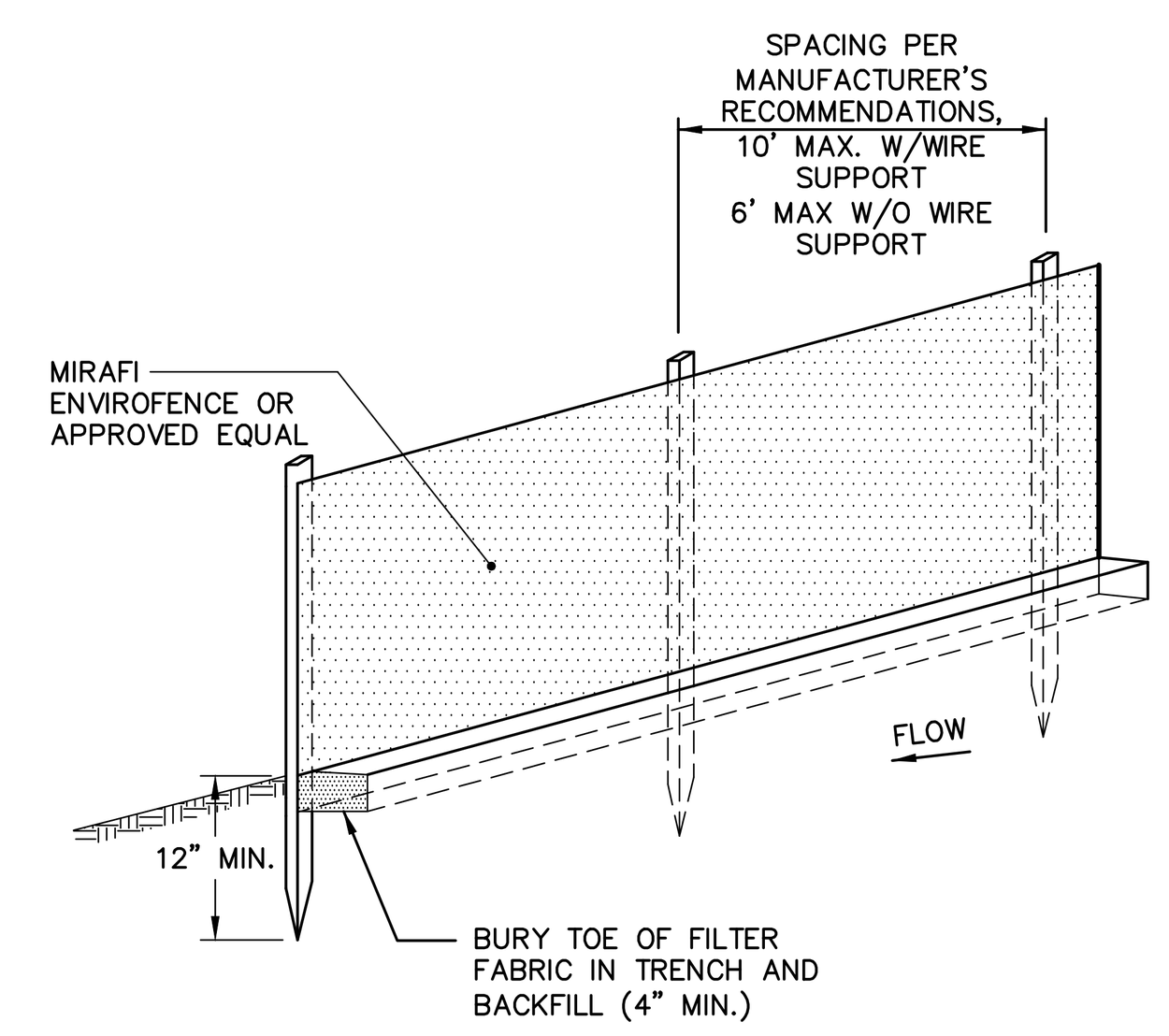

NOTES:

- INSTALL FABRIC ON UPHILL SIDE OF SUPPORT POSTS
- INSTALL SILT FENCE ACROSS SLOPES
- SILT FENCE SHALL NOT BE USED IN DRAINAGE WAYS

MAINTENANCE: INSPECT FOR TEARS IN THE FABRIC OR DAMAGE TO SUPPORTS. REPAIR AS NECESSARY. REMOVE ACCUMULATED SEDIMENT WHEN IT REACHES A DEPTH OF SIX-INCHES OR LESS.

REMOVAL: WHEN UPSLOPE AREAS ARE STABILIZED, THE STRUCTURE AND ANY ACCUMULATED SEDIMENT WILL BE REMOVED.

SEDIMENT BARRIER – SILTATION FENCE DETAIL

N.T.S.

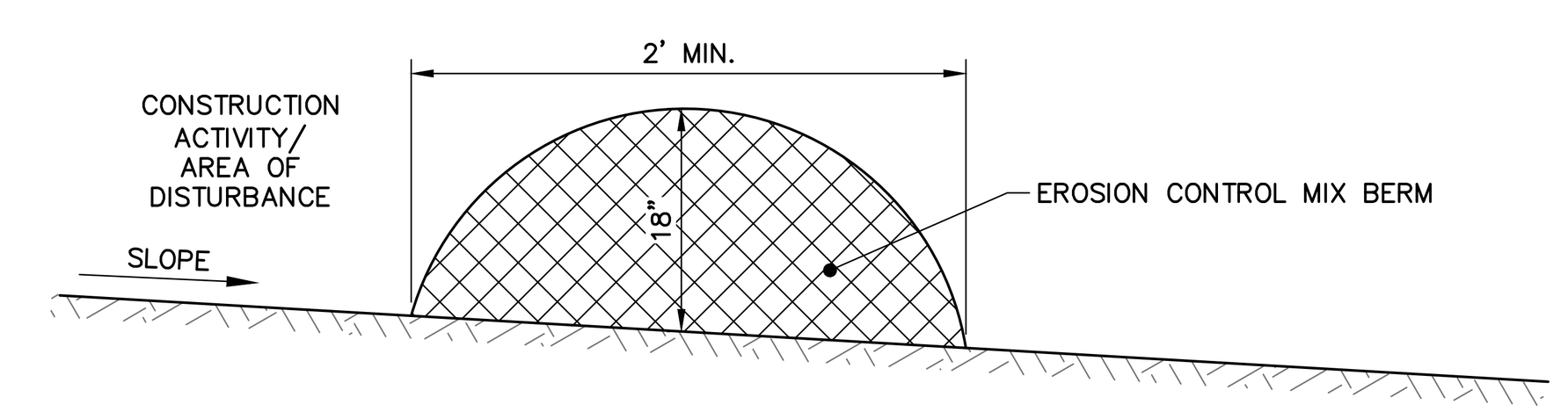

NOTES:

1. EROSION CONTROL MIX CAN BE MANUFACTURED ON OR OFF THE PROJECT SITE. IT MUST CONSIST PRIMARILY OF ORGANIC MATERIAL AND MAY INCLUDE: SHREDDED BARK, STUMP GRINDINGS, COMPOSTED BARK, OR ACCEPTABLE MANUFACTURED PRODUCTS. WOOD AND BARK CHIPS, GROUND CONSTRUCTION DEBRIS OR REPROCESSED WOOD PRODUCTS WILL NOT BE ACCEPTABLE AS THE ORGANIC COMPONENT OF THE MIX.
2. EROSION CONTROL MIX SHALL CONTAIN A WELL-GRADED MIXTURE OF PARTICLE SIZES AND MAY CONTAIN ROCKS LESS THAN 4" IN DIAMETER. EROSION CONTROL MIX MUST BE FREE OF REFUSE, PHYSICAL CONTAMINANTS, AND MATERIAL TOXIC TO PLANT GROWTH. THE MIX COMPOSITION SHALL MEET THE FOLLOWING STANDARDS:
   - THE ORGANIC MATTER CONTENT SHALL BE BETWEEN 80 AND 100%, DRY WEIGHT BASIS.
   - PARTICLE SIZE BY WEIGHT SHALL BE 100% PASSING A 6" SCREEN AND A MINIMUM OF 70%, MAXIMUM OF 85%, PASSING A 0.75" SCREEN.
   - THE ORGANIC PORTION NEEDS TO BE FIBROUS AND ELONGATED.
   - LARGE PORTIONS OF SILTS, CLAYS OR FINE SANDS ARE NOT ACCEPTABLE IN THE MIX.
   - SOLUBLE SALTS CONTENT SHALL BE < 4.0 MMHOS/CM.
   - THE PH SHOULD FALL BETWEEN 5.0 AND 8.0.

EROSION CONTROL MIX BERM

N.T.S.

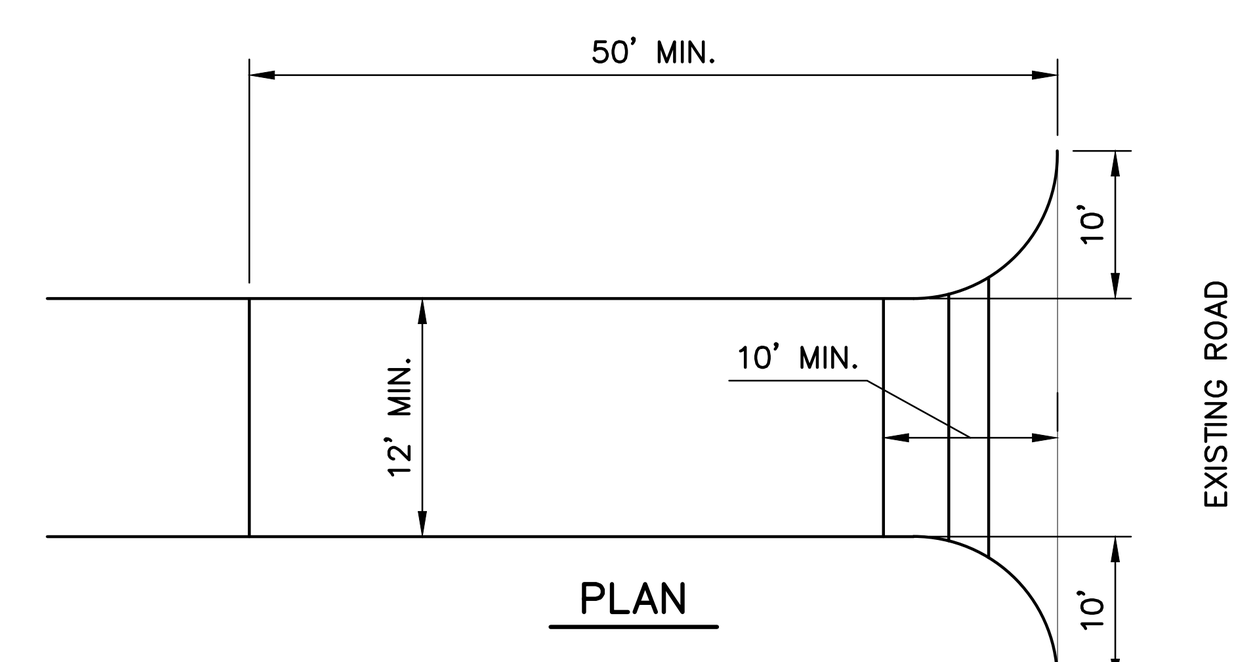

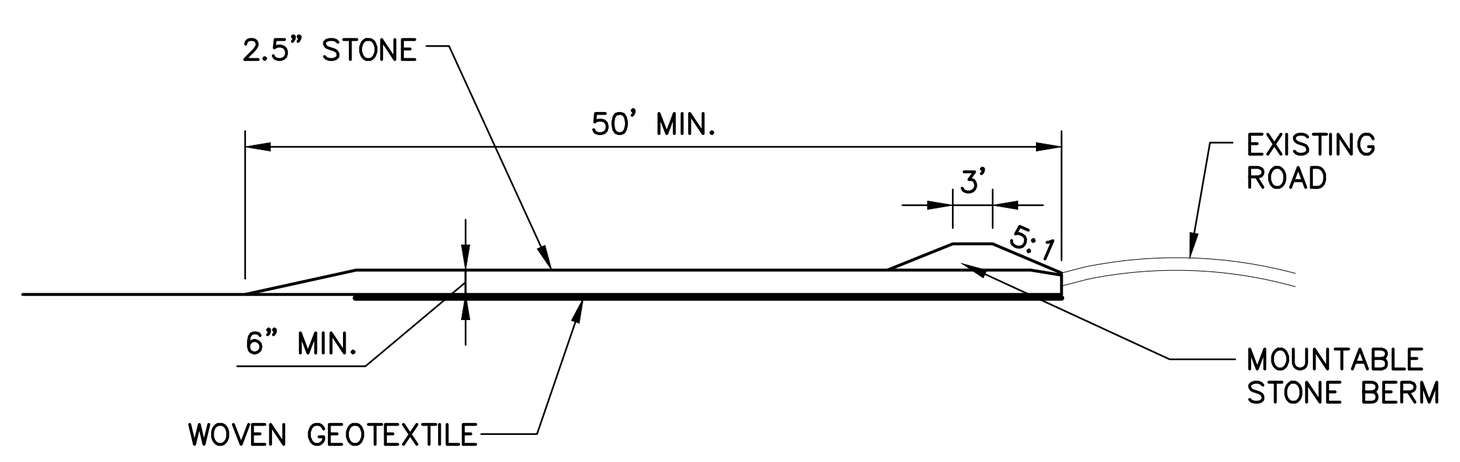

NOTES:

- CONSTRUCTION ENTRANCES MAY BE RELOCATED AS CONSTRUCTION PROGRESSES.
- WHEEL WASH PITS MAY ALSO BE USED, IF APPROVED.

MAINTENANCE: INSPECT FOR EFFECTIVE REMOVAL OF SOIL FROM VEHICLES PRIOR TO LEAVING THE SITE. SWEEP ANY SOIL FROM ADJACENT ROADWAYS.

REMOVAL: AT LEAST ONE CONSTRUCTION ENTRANCE SHALL BE MAINTAINED UNTIL ALL AREAS OF THE SITE ARE STABILIZED.

STABILIZED CONSTRUCTION ENTRANCE DETAIL

N.T.S.

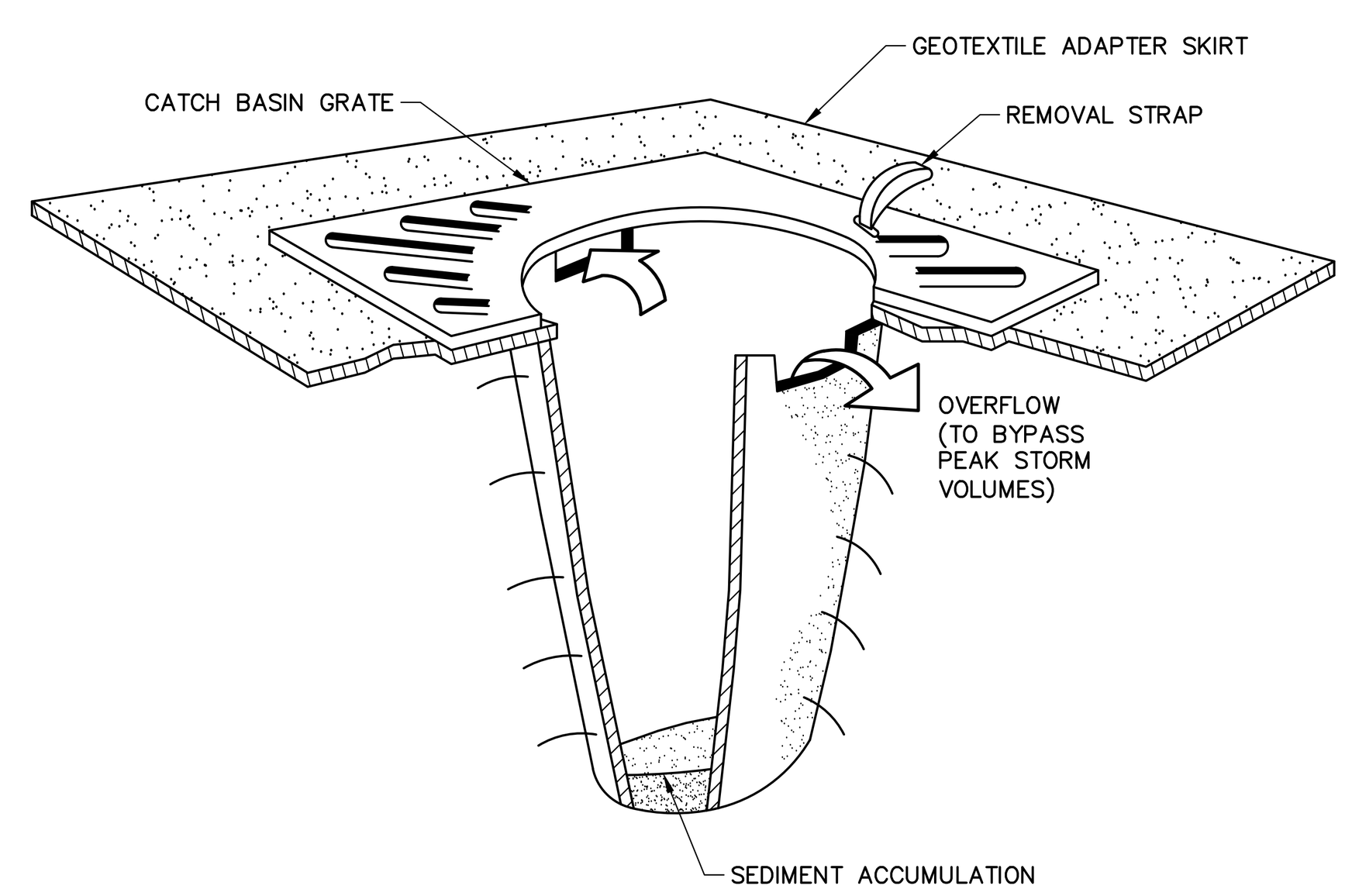

NOTES:

CATCH BASIN PROTECTION TO BE "SILTSACK" (BY ACF ENVIRONMENTAL) OR "STREAM GUARD" (BY FOSS ENVIRONMENTAL SERVICES).

INSERT TO BE EMPTIED IN AN APPROVED MANNER WHEN IT IS 1/2 FULL OF SEDIMENT.

INSPECT INSERT AFTER ALL RAINFALL EVENTS, REPAIR AND MAINTAIN AS REQUIRED.

TEMPORARY INLET PROTECTION

N.T.S.

EROSION AND SEDIMENT CONTROL NOTES

Temporary Erosion Control

Contractor shall prepare and submit a soil erosion and water pollution control plan to engineer.

Measure	Dates For Use	Timing, Activity, and Location
Sediment Barrier	ALL	Before soil disturbance, install downhill of areas to be disturbed and around material stockpiles.
Up-slope Diversion	ALL	Before soil disturbance, install uphill of areas to be disturbed and material stockpiles.
Catch Basin Protection	ALL	Before soil or pavement disturbance, install ACF Environmental, Inc. High Flow Siltsack, Siltsaver Inlet Filter. or equal, installed per manufacturer's requirements.
Dust Control	ALL	During dry weather, apply water and calcium chloride to control dust.
Temporary Seeding	April 15 to Oct. 1	Soil stockpiles that are not covered and disturbed areas that will not be disturbed again within 14 days. If grass growth provides less than 95% soil coverage by Nov. 1, apply mulch and anchor with erosion control blanket.
Mulch	April 15 to Sept. 15	On all areas of exposed soil prior to rain events or every __ days, apply 100–150 lbs (2.5 bales) per 1,000 sq ft. by mechanical blower.
Winter Mulch	Sept. 16 to Oct. 31	On all areas of exposed soil prior to precipitation or every __ days, apply 150 to 170 lbs. mulch (4 bales) per 1,000 sq. ft. by mechanical blower. Erosion control blanket may be used as a substitute for winter mulch.
	Nov. 1 to April 14	On all areas of exposed soil, apply 150 to 170 lbs. mulch (4 bales) per 1,000 sq. ft. and anchor with netting at the end of each working day. Erosion control blanket may be used as a substitute for winter mulch.
Inspections	Until site is permanently stabilized	Inspect the erosion and sedimentation control measures daily, and maintain and repair as necessary.

Permanent Erosion Control:

Measure	Dates For Use	Timing, Activity, and Location
Pavement – Base Course – Final Course	When no frost is in ground	Install only in areas shown on the plan, shortly after pavement base is brought to final grade. Install near completion of project.
Permanent Seeding	April 15 to Sept. 15	On final grade areas, within 7 days of grade preparation, prepare topsoil, followed by seed and mulch application.
Dormant Seeding	Sept. 16 to April 15	On final grade areas, with prepared topsoil. Apply seed at double the specified rate on bare soil, and follow with an application of winter mulch.
Ground Cover, Trees, Shrubs	April 15 to Nov. 1	Install with final landscaping.
Permanent Mulch	ALL	Install with final landscaping.

Inspections:

Regular inspections of all erosion and sedimentation controls shall be made at least weekly and prior to and following storm events. Minimum inspections shall be made as listed in the table below.

Inspected Item	Look For
Mulched Surfaces	Thin mulch or inadequate application. Wind movement.
Seeded Surfaces	Poor seed germination. Loss of mulch. Development of rivulets.
Sediment Barrier	Sediment build-up to one half the height of the barrier. Undermining of the barrier. Supporting stakes loose, toppled, or unmarked. Breaks in barrier.
Perimeter Diversion	Discharge is to stabilized area. Erosion or breaks in barrier. Supporting stakes loose, toppled or unmarked.
Catch Basin Protection	Sediment build-up and structure blockages. Slow flow/Ponding water. Breaks in fabric or voids in barrier.
Dewatering Filter	Breaks in fabric or supporting structure. Slow flow, indicating high sediment build-up.
Construction Entrance	Sedimentation of roadways. Off-site dust complaints.

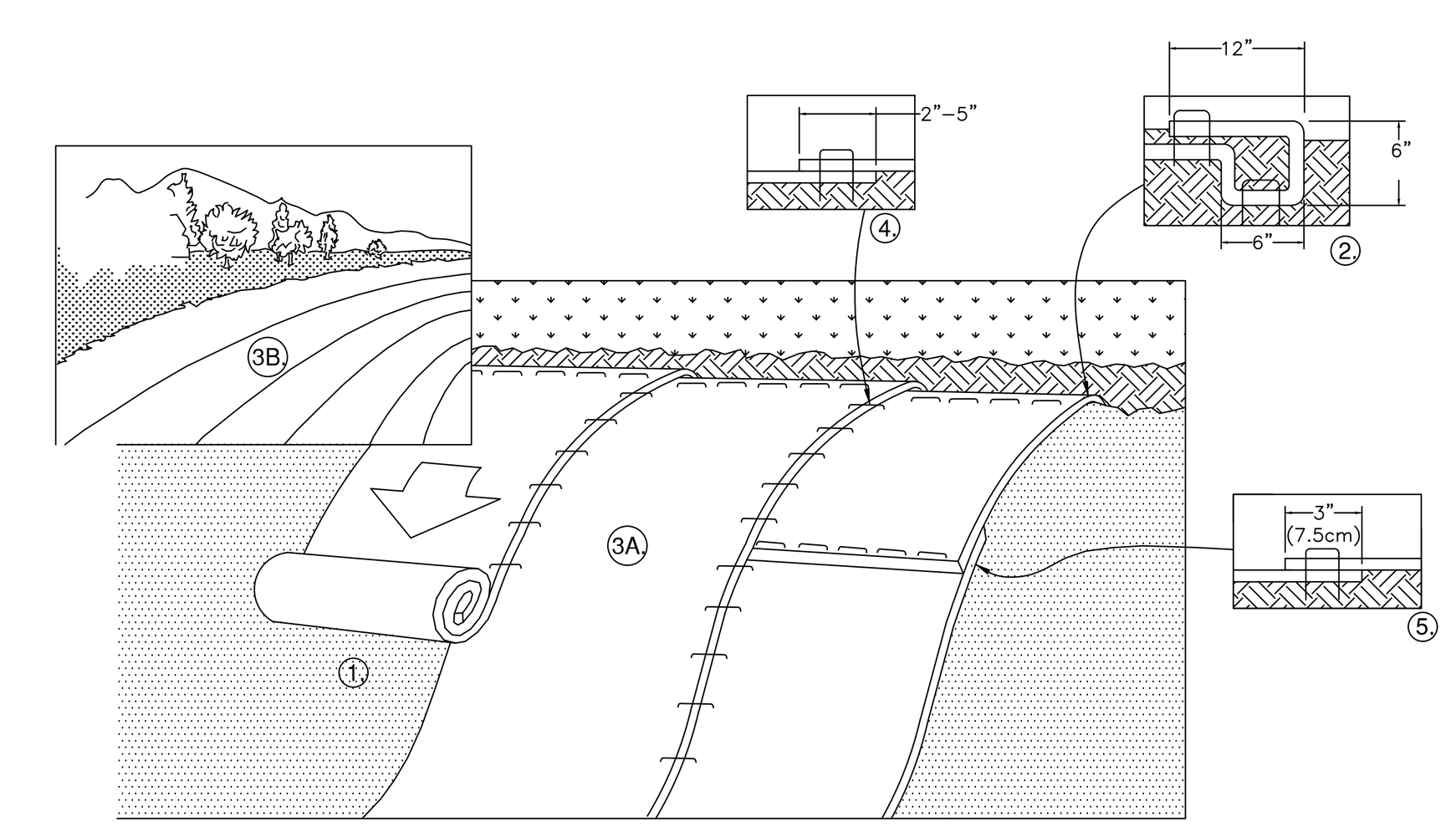

1. PREPARE SOIL BEFORE INSTALLING ROLLED EROSION CONTROL PRODUCTS (RECP's), INCLUDING ANY NECESSARY APPLICATION OF LIME, FERTILIZER, AND SEED AS WELL AS REMOVING ANY PROTRUDING ROCKS, STUMPS OR ROOTS. DURING THE GROWING SEASON (APRIL 15–SEPTEMBER 15) USE RECP'S ON THE BASE OF GRASSED WATERWAYS, SOIL SLOPES HAVING A GRADE GREATER THAN 15%, OR ANYWHERE WHERE HAY MULCH HAS PROVEN TO BE INEFFECTIVE AT CONTROLLING SHEET EROSION. RECP'S ARE A MANUFACTURED COMBINATION OF MULCH AND NETTING DESIGNED TO PREVENT EROSION AND RETAIN SOIL MOISTURE. FOR OVER WINTER PROTECTION, APPLY RECP'S ON THE BASE AND SIDE SLOPES OF GRASSED WATERWAYS AND ON SLOPES STEEPER THAN AN 8% GRADE.
2. BEGIN AT THE TOP OF THE SLOPE BY ANCHORING THE RECP's IN A 6" DEEP X 6" WIDE TRENCH WITH APPROXIMATELY 12" OF RECP's EXTENDED BEYOND THE UP-SLOPE PORTION OF THE TRENCH. ANCHOR THE RECP's WITH A ROW OF STAPLES/STAKES APPROXIMATELY 12" APART IN THE BOTTOM OF THE TRENCH. BACKFILL AND COMPACT THE TRENCH AFTER STAPLING. APPLY SEED TO COMPACTED SOIL AND FOLD REMAINING 12" PORTION OF RECP's BACK OVER SEED AND COMPACTED SOIL. SECURE RECP's OVER COMPACTED SOIL WITH A ROW OF STAPLES/STAKES SPACED APPROXIMATELY 12" APART ACROSS THE WIDTH OF THE RECP's.
3. ROLL THE RECP's (A.) DOWN OR (B.) HORIZONTALLY ACROSS THE SLOPE. RECP's WILL UNROLL WITH APPROPRIATE SIDE AGAINST THE SOIL SURFACE. ALL RECP's MUST BE SECURELY FASTENED TO SOIL SURFACE BY PLACING STAPLES/STAKES IN APPROPRIATE LOCATIONS AS SHOWN IN THE STAPLE PATTERN GUIDE. WHEN USING THE DOT SYSTEM, STAPLES/STAKES SHOULD BE PLACED THROUGH EACH OF THE COLORED DOTS CORRESPONDING TO THE APPROPRIATE STAPLE PATTERN.
4. THE EDGES OF PARALLEL RECP's MUST BE STAPLED WITH APPROXIMATELY 2" – 5" OVERLAP DEPENDING ON RECP's TYPE.
5. CONSECUTIVE RECP's SPLICED DOWN THE SLOPE MUST BE PLACED END OVER END (SHINGLE STYLE) WITH AN APPROXIMATE 3" OVERLAP. STAPLE THROUGH OVERLAPPED AREA, APPROXIMATELY 12" APART ACROSS ENTIRE RECP's WIDTH. NOTE: *IN LOOSE SOIL CONDITIONS, THE USE OF STAPLE OR STAKE LENGTHS GREATER THAN 6" MAY BE NECESSARY TO PROPERLY SECURE THE RECP's.
6. UNTIL GRASS IS ABUNDANT, INSPECT PERIODICALLY AND AFTER EACH RAINSTORM TO CHECK FOR EROSION. IMMEDIATELY REPAIR AND ADD MORE MULCH UNTIL GRASSES ARE FIRMLY ESTABLISHED. DO NOT MOW THE FIRST YEAR.

ROLLED EROSION CONTROL MATTING

N.T.S.

EROSION AND SEDIMENT CONTROL NOTES

TEMPORARY EROSION CONTROL MEASURES MAY INCLUDE THE USE OF STABILIZED CONSTRUCTION ENTRANCES, HYDRAULIC MULCH, HAY AND STRAW MULCH, EROSION CONTROL BLANKET, TURF REINFORCED MATTING, RIPRAP AND TEMPORARY SEEDING. TEMPORARY SEDIMENT CONTROL MEASURES INCLUDE THE USE OF SILT FENCE, EROSION CONTROL MIX BERMS, CATCHBASIN SEDIMENT COLLECTION BAGS AND GEOTEXTILE FILTER BAGS. PERMANENT MEASURES INCLUDE PERMANENT VEGETATION OR PAVING.

GENERAL

A. THE PROJECT SHALL CONFORM WITH THE STANDARDS OF THE MAINE CONSTRUCTION GENERAL PERMIT.

B. ALL EROSION AND SEDIMENT CONTROL MEASURES SHALL BE CONSTRUCTED AND MAINTAINED IN ACCORDANCE WITH THE MAINE EROSION AND SEDIMENT CONTROL BMPS HANDBOOK PUBLISHED BY THE MAINE DEP UNLESS OTHERWISE NOTED IN THESE PLANS. HTTP://MAINE.GOV/DEP/BLWQ/DOCSTAND/ESCBMPS/

C. ANY ADDITIONAL EROSION AND SEDIMENT CONTROL MEASURES DEEMED NECESSARY BY THE OWNER'S REPRESENTATIVE, DEPARTMENT OF ENVIRONMENTAL PROTECTION, AND/OR MUNICIPAL OFFICIALS SHALL BE INSTALLED BY THE CONTRACTOR.

D. THE CONTRACTOR IS RESPONSIBLE FOR ALL FINES RESULTING FROM EROSION OR SEDIMENTATION FROM THE SITE TO SURROUNDING PROPERTIES, WATER BODIES, OR WETLANDS AS A RESULT OF THIS PROJECT.

E. THE CONTRACTOR SHALL MINIMIZE DISTURBANCE TO THE SITE WHENEVER POSSIBLE WHILE ALLOWING PROPER SITE DEVELOPMENT.

F. CONSTRUCTION STAGING SHALL BE CONDUCTED IN A WAY TO MINIMIZE THE POTENTIAL FOR STORMWATER RUN-ON TO DISTURBED AREAS.

G. THE CONTRACTOR SHALL BE RESPONSIBLE FOR THE REPAIR/REPLACEMENT/MAINTENANCE OF ALL EROSION CONTROL MEASURES UNTIL ALL DISTURBED AREAS ARE STABILIZED TO THE SATISFACTION OF THE ABOVE PERSONNEL. DESCRIPTIONS OF PERMANENT STABILIZATION FOR VARIOUS COVER TYPES FOLLOWS:

i. FOR SEEDED AREAS, PERMANENT STABILIZATION MEANS THAT 90% OF THE DISTURBED AREA IS COVERED WITH REASONABLY THICK UNIFORM STAND OF PERMANENT GRASS SPECIES, FREE FROM SIZABLE THIN OR BARE SPOTS.
ii. FOR SODDED AREAS, PERMANENT STABILIZATION MEANS THAT COMPLETE BINDING OF THE SOD ROOTS INTO THE UNDERLYING SOIL WITH NO SLUMPING OF THE SOD OR DIE OFF.
iii. FOR MULCHED AREAS, PERMANENT STABILIZATION MEANS TOTAL COVERAGE OF THE EXPOSED AREA WITH AN APPROVED MULCH MATERIAL.
iv. FOR PAVED AREAS, PERMANENT STABILIZATION MEANS THE PLACEMENT OF THE ASPHALT BINDER COURSE.

H. IF THE AREA WILL REMAIN UNWORKED FOR MORE THAN ONE YEAR OR HAS BEEN BROUGHT TO FINAL GRADE, AND WILL NOT BE BUILT ON, THEN IMMEDIATELY PROVIDE PERMANENT STABILIZATION USING VEGETATION THROUGH PLANTING, SEEDING, SOD OR THROUGH THE USE OF PERMANENT MULCH OR RIPRAP. IF USING VEGETATION FOR STABILIZATION, SELECT THE PROPER VEGETATION FOR THE LIGHT, MOISTURE, AND SOIL CONDITIONS. AMEND AREAS OF DISTURBED, OVERLY-COMPACTED SUBSOIL WITH TOPSOIL OR COMPOST AND LIGHTLY TILL 2-3" OF SOIL AMENDMENTS INTO THE TOP 8" OF SOIL.

I. PERMANENT SEEDING SPECIFICATION: IT IS RECOMMENDED THAT PERMANENT SEEDING BE COMPLETED BETWEEN APRIL 1 AND AUGUST 15 OF EACH YEAR. LATE SEASON SEEDING MAY BE DONE BETWEEN AUGUST 15 AND SEPTEMBER 15. AREAS NOT SEEDED OR WHICH DO NOT OBTAIN A SATISFACTORY GROWTH BY OCTOBER 1 SHALL BE SEEDED WITH AROOSTOCK WINTER RYE OR MULCHED AT SPECIFIED RATES. SEE WINTER SEEDING AND MULCHING SPECIFICATIONS FOR STABILIZATION AFTER NOVEMBER 1.

i. APPLY TOPSOIL TO A DEPTH OF 6 INCHES. IN COMPACTED AREAS TILL 2-3" OF COMPOST INTO UPPER 8" OF DISTURBED SOIL AND THEN APPLY 6 INCHES OF TOPSOIL.
ii. APPLY LIME AND FERTILIZER ACCORDING TO SOIL TESTS. IN LIEU OF SOIL TESTS, APPLY GROUND LIMESTONE AT A RATE OF 33 LBS PER 1000 SQUARE FEET AND GRANULAR, COMMERCIAL-GRADE FERTILIZER 10-10-10 AT A RATE OF 18 LBS PER 1000 SQUARE FEET.
iii. UNIFORMLY APPLY SEED MIXTURE AT THE RECOMMENDED SEEDING RATES AND DATES, APPLY HAY OR STRAW MULCH AT A RATE OF 2.5 BALES PER 1000 SQUARE FEET AND ANCHOR AS NECESSARY.

J. PROTECT ALL SEEDED AREAS WITH MULCH OR EROSION CONTROL BLANKET IN AREAS OF SHEET OR CONCENTRATED FLOWS. MULCH ALL AREAS SO THAT SOIL IS NOT VISIBLE THROUGH THE MULCH REGARDLESS OF THE APPLICATION RATE. SCHEDULE SEEDING OR SODDING TO AVOID FAILURE DUE TO SUMMER DROUGHT AND FALL FROST. NEWLY SEEDED AREAS SHOULD BE PROTECTED FROM VEHICLE TRAFFIC, PEDESTRIAN TRAFFIC AND CONCENTRATED RUNOFF UNTIL THE VEGETATION IS WELL ESTABLISHED. AREAS MUST BE REWORKED AND RESTABILIZED IF GERMINATION IS SPARSE OR SURFACE EROSION IS EVIDENT.

K. EROSION CONTROL BLANKET SHALL BE INSTALLED ON ALL PERMANENT SLOPES STEEPER THAN 3:1 OR AS OTHERWISE NOTED, EROSION CONTROL BLANKET SHALL BE NORTH AMERICAN GREEN S150BN OR APPROVED EQUAL. EROSION CONTROL BLANKET SHALL BE INSTALLED IN ACCORDANCE WITH THE MANUFACTURER'S RECOMMENDATIONS.

L. THE CONTRACTOR IS RESPONSIBLE FOR REMOVAL OF ALL TEMPORARY EROSION CONTROL MEASURE UPON STABILIZATION OF PROJECT AREA & COST SHALL BE INCIDENTAL TO CONTRACT.

WINTER CONDITIONS

A. WINTER CONSTRUCTION IS CONSTRUCTION ACTIVITY PERFORMED DURING THE PERIOD FROM NOVEMBER 1 THROUGH APRIL 1. IF AREAS WITHIN THE CONSTRUCTION AREA ARE NOT STABILIZED WITH TEMPORARY OR PERMANENT MEASURES OUTLINED ABOVE BY NOVEMBER 15 THEN THE SITE MUST BE PROTECTED WITH ADDITIONAL STABILIZATION MEASURES THAT ARE SPECIFIC TO WINTER CONDITIONS.

GOOD HOUSEKEEPING AND POLLUTION PREVENTION

A. SPILL PREVENTION CONTROLS MUST BE USED TO PREVENT POLLUTANTS FROM BEING DISCHARGED FROM MATERIALS ON SITE, INCLUDING STORAGE PRACTICES TO MINIMIZE EXPOSURE OF THE MATERIALS TO STORMWATER RUNOFF AND APPROPRIATE SPILL PREVENTION, CONTAINMENT AND RESPONSE PLANNING AND IMPLEMENTATION.

B. DURING CONSTRUCTION, PETROLEUM PRODUCTS AND OTHER HAZARDOUS MATERIALS WITH THE POTENTIAL TO CONTAMINATE GROUND OR SURFACE WATERS MAY NOT BE STORED OR HANDLED IN AREAS OF THE SITE DRAINING TO INFILTRATION AREAS. AN "INFILTRATION AREA" IS ANY ARE OF THE SITE THAT BY DESIGN, OR AS A RESULTS OF SOIL AND TOPOGRAPHY, ACCUMULATES RUNOFF THAT INFILTRATES IN THE SOIL. DIKES, BERMS, SUMPS AND OTHER FORMS OF TEMPORARY SECONDARY CONTAINMENT THAT PREVENT DISCHARGE TO GROUNDWATER MAY BE USED TO ISOLATE PORTIONS OF THE SITE FOR THE PURPOSES OF STORAGE AND HANDLING OF THESE MATERIALS.

C. LOCATE ALL MATERIAL STOCKPILES WITH CONSIDERATION FOR STORMWATER DRAINAGE PATTERNS AND INFRASTRUCTURE.

D. TAKE ALL REASONABLE MEASURES TO MINIMIZE DUST RESULTING FROM THE PROJECT. OIL MAY NOT BE USED FOR DUST CONTROL.

E. LOCATE ALL LITTER, CONSTRUCTION DEBRIS AND CONSTRUCTION CHEMICALS WITH CONSIDERATION FOR STORMWATER DRAINAGE PATTERNS AND INFRASTRUCTURE.

F. TRENCH OR FOUNDATION DE-WATERING MUST BE SPREAD THROUGH SUFFICIENT NATURAL BUFFERS THAT HAVE CAPACITY TO INFILTRATE THE PUMPED WATER OR SHOULD BE PUMPED TO DESIGNED CONSTRUCTION DEWATERING DEVICES AS DESCRIBED IN THE MAINE EROSION AND SEDIMENT CONTROL BMPS HANDBOOK.

G. SEDIMENTS AND SOIL MATERIALS SHOULD BE SWEPT FROM PAVED SURFACES AT THE END OF EACH WORKDAY OR PRIOR TO RAIN EVENTS, WHENEVER POSSIBLE.

INSPECTION AND MAINTENANCE

A. A PERSON WITH KNOWLEDGE OF EROSION AND STORMWATER CONTROLS, INCLUDING THE STANDARDS IN THE MAINE CONSTRUCTION GENERAL PERMIT, THE MAINE EROSION AND SEDIMENT CONTROL BMPS HANDBOOK OR ANY MUNICIPAL REQUIREMENTS MUST CONDUCT THE INSPECTION. THIS PERSON MUST BE IDENTIFIED IN THE INSPECTION LOG. IF ADDITIONAL BMPS OR MODIFICATIONS TO BMPS ARE NECESSARY, THE MODIFICATIONS MUST BE IMPLEMENTED WITH 7 CALENDAR DAYS OR PRIOR TO ANY PRECIPITATION EVENT. ALL MEASURES MUST BE MAINTAINED IN EFFECTIVE OPERATING CONDITION UNTIL AREAS ARE PERMANENTLY STABILIZED.

B. AN INSPECTION AND MAINTENANCE LOG MUST BE KEPT BY THE CONTRACTOR, SUMMARIZING THE SCOPE OF THE INSPECTION, DATE, AND MAJOR OBSERVATIONS RELATING TO THE OPERATION OF EROSION AND SEDIMENT CONTROL BMPS, MATERIAL STORAGE AREAS, AND VEHICLE ACCESS POINTS TO THE CONSTRUCTION AREA. THE INSPECTION LOG SHOULD BE DELIVERED TO THE PROPERTY OWNER OR RESPONSIBLE CONTRACTING ENTITY UPON COMPLETION OF THE PROJECT.

NOT FOR CONSTRUCTION

WOODARD & CURRAN
41 Hutchins Drive
Portland, Maine 04102
800.426.4262 | www.woodardcurran.com
COMMITMENT & INTEGRITY DRIVE RESULTS

THIS DOCUMENT IS THE PROPERTY OF WOODARD & CURRAN INC. AND ITS CLIENT. REPRODUCTION OR MODIFICATION WITHOUT WRITTEN PERMISSION IS PROHIBITED.

STATE OF MAINE ★ LAUREN JANE SWETT No. 12284 LICENSED PROFESSIONAL ENGINEER ★

REV	DESCRIPTION	DATE

REV	DESCRIPTION	DATE

DESIGNED BY: LJS | DRAWN BY: BCM | CHECKED BY: DLC | 0227007 PHASE 1 DETAILS*.dwg

CIVIL DETAILS - 2

PORTLAND FORESIDE DEVELOPMENT CO.
PORTLAND, ME 04102

PHASE 1 SITE PLAN SUBMISSION

JOB NO.: 0227007
DATE: NOVEMBER 2019
SCALE: AS NOTED
SHEET: 14 OF 17

C-201

42x30 SHEET 1:1

\\woodardcurran.net\shared\Projects\0227007.07 PFDC - 58 Fore Block 1\wip\Drawings\Phase 1 - Site Plan Submission\0227007 Phase 1 Details.dwg, Nov 08, 2019 - 2:06pm

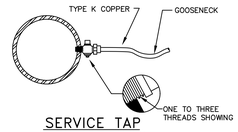

SERVICE TAP
(3/4" AND 1" C.C. THREAD)

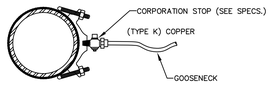

SERVICE SADDLE
(1-1/2" AND 2" C.C. THREAD)

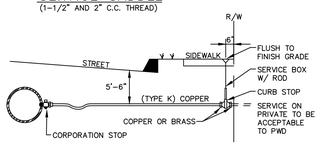

TYPICAL SERVICE CONNECTION
N.T.S.

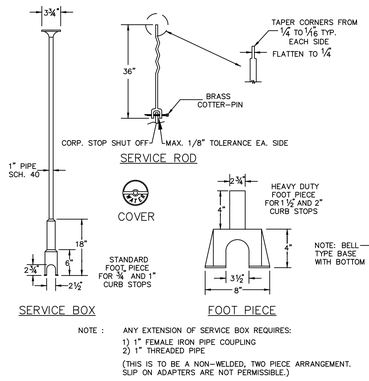

NOTE : ANY EXTENSION OF SERVICE BOX REQUIRES:
1) 1" FEMALE IRON PIPE COUPLING
2) 1" THREADED PIPE
(THIS IS TO BE A NON-WELDED, TWO PIECE ARRANGEMENT. SLIP ON ADAPTERS ARE NOT PERMISSIBLE.)

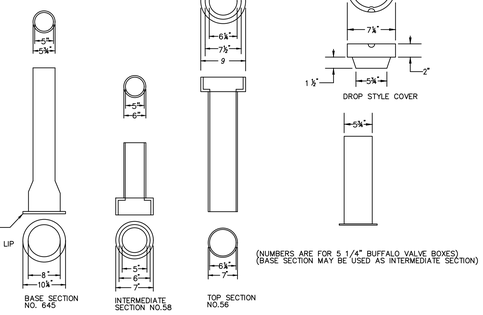

(NUMBERS ARE FOR 5 1/4" BUFFALO VALVE BOXES)
(BASE SECTION MAY BE USED AS INTERMEDIATE SECTION)

VALVE BOX & COVER
N.T.S.

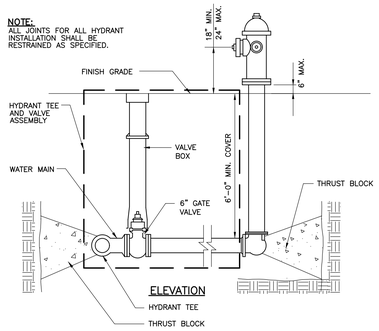

TYPICAL HYDRANT ASSEMBLY DETAIL
N.T.S.

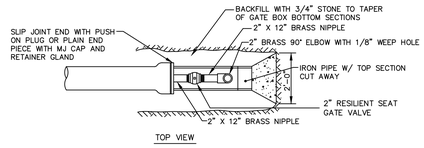

TOP VIEW

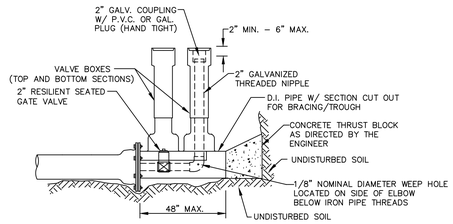

STANDARD 2" BLOW OFF
N.T.S.

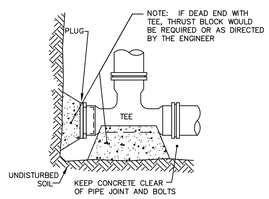

STANDARD TEE BLOCKING
N.T.S.

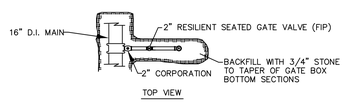

TOP VIEW

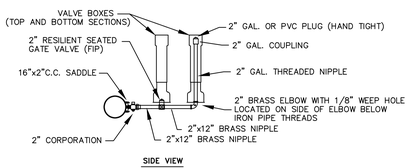

SIDE VIEW

SIDE-ARM BLOW-OFF
4" & LARGER MAINS
N.T.S.

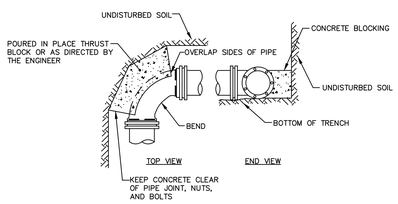

STANDARD BEND BLOCKING
N.T.S.

41 Hutchins Drive
Portland, Maine 04102
800.426.4262 | www.woodardcurran.com

COMMITMENT & INTEGRITY DRIVE RESULTS

THIS DOCUMENT IS THE PROPERTY OF WOODARD & CURRAN INC., AND ITS CLIENT. DISCLOSURE OR REPRODUCTION WITHOUT WRITTEN PERMISSION IS PROHIBITED.

WOODARD & CURRAN

STATE OF MAINE
LAUREN JANET SWETT
No. 12284
REGISTERED PROFESSIONAL ENGINEER

REV	DESCRIPTION	DATE
	07/07 PWB 1.19.10 Pm	

REV	DESCRIPTION	DATE

DESIGNED BY: LJS | DRAWN BY: BDM | CHECKED BY: DLC

PORTLAND FORESIDE DEVELOPMENT CO.
PORTLAND, ME 04102

PHASE 1 SITE PLAN SUBMISSION

CIVIL DETAILS - 3

JOB NO.: 0227007
DATE: NOVEMBER 2019
SCALE: AS NOTED
SHEET: 15 OF 17

C-202

NOT FOR CONSTRUCTION

\\woodardcurran.net\shared\Projects\0227007.07 PFDC - 58 Fore Block 1\wip\Drawings\Phase 1 - Site Plan Submission\0227007 Phase 1 Details.dwg, Nov 08, 2019 - 2:06pm

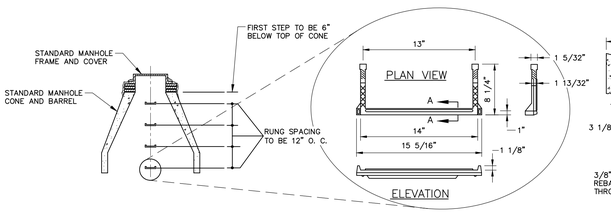

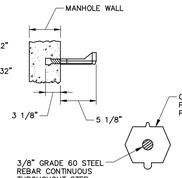

PLASTIC MANHOLE STEPS

N.T.S.

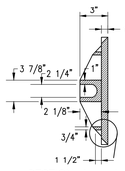

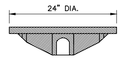

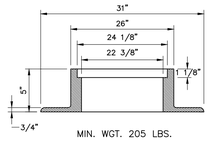

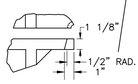

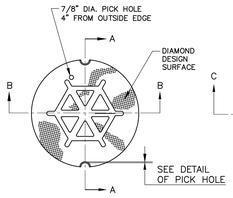

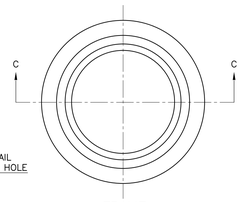

NOTE:

FOR ALL CROSS COUNTRY MANHOLES (LAWN AREAS), USE PAM REXUS MANHOLE COVERS BY CERTAINTEED.

TYPE "A" CAST IRON MANHOLE COVER AND FRAME

N.T.S.

GENERAL NOTES FOR MANHOLES AND CATCH BASINS

1. ALL CONCRETE SHALL BE CLASS "A" AND HAVE A MINIMUM ULTIMATE COMPRESSIVE STRENGTH OF 4000 LBS. PER SQ. INCH AT THE END OF 28 DAYS, UNLESS OTHERWISE NOTED.
2. PRECAST REINFORCED CONE BARREL MANUFACTURED PER ASTM SPEC. C-478.
3. ALL MANHOLES SHALL HAVE A BITUMINOUS WATERPROOFING APPLIED TO THE EXTERIOR SURFACE. IF CONSTRUCTED OF BRICK MASONRY, SURFACE SHALL BE PLASTERED WITH A SMOOTH MORTAR FINISH 3/8" THICK. AFTER THE MORTAR HAS SET, THE SURFACE SHALL BE WATERPROOFED AS REQUIRED BY SUPPLEMENTAL SPECIFICATIONS SECTION 604.
4. CASTINGS SHALL CONFORM TO ASTM DESIGNATION A48-CLASS 35. ALL PARTS OF CASTINGS, EXCEPT FINISHED SURFACE, SHALL RECEIVE A COAT OF COAL TAR PITCH VARNISH OR ASPHALTUM PAINT WHICH SHALL BE SMOOTH AND TOUGH BUT NOT BRITTLE.
5. MANHOLES MAY BE CONSTRUCTED OF MASONRY, PRECAST REINFORCED CONCRETE, OR CAST IN PLACE.
6. CONTRACTOR SHALL SUBMIT ANTIFLOATATION CALCULATIONS FOR ALL MANHOLE AND CATCH BASIN STRUCTURES.
7. ALL PRECAST MANHOLES AND CATCH BASINS SHALL BE IDENTIFIED BY STATION, OFFSET, AND STRUCTURE ID PAINTED ON THE SIDE OF THE STRUCTURE BY THE MANUFACTURER.
8. STORM AND SEWER MANHOLES SHALL HAVE SOLID COVERS WITH ONE DRILLED PICK HOLE.
9. EXISTING MANHOLES, CATCH BASINS, FRAMES, AND COVERS SHALL BE SALVAGED BY THE CONTRACTOR, AND SHALL REMAIN THE PROPERTY OF THE CITY OF PORTLAND.
10. WHEN THE FLOW CHANGES DIRECTION IN A MANHOLE, THE CHANNEL ALIGNMENT SHALL FOLLOW A SMOOTH RADIUS. CHANNELS SHALL BE FORMED TO ACCEPT ALL INLET PIPES.
11. ON STORM AND SEWER MANHOLES, THE SHELF AND CHANNEL SHALL BE FORMED BY BRICK SET IN CEMENT MORTAR OR BY FACTORY PRE-CAST CONCRETE. SUCH PRE-CAST CONCRETE SHALL BE EPOXY COATED AND THE SHELF SHALL HAVE A PERMANENT NON-SKID SURFACE.

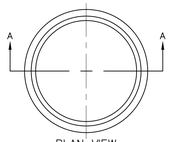

NOTE:

ALL MANHOLE COVERS SHALL BE SOLID AND SHALL HAVE ONE 7/8" DIAMETER DRILLED PICK HOLE, LOCATED 8" FROM THE CENTER OF THE COVER.

ALL SANITARY MANHOLE COVERS SHALL HAVE "SEWER" CAST INTO THE COVER. ALL STORMWATER/DRAIN MANHOLE COVERS SHALL HAVE "DRAIN" CAST INTO THE COVER.

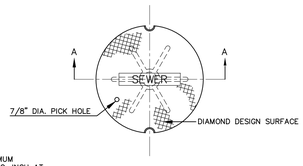

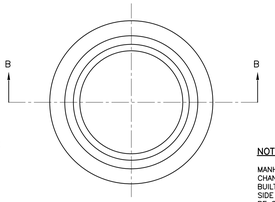

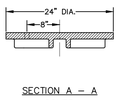

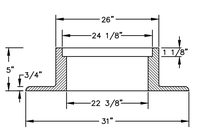

CAST IRON MANHOLE COVER AND FRAME

N.T.S.

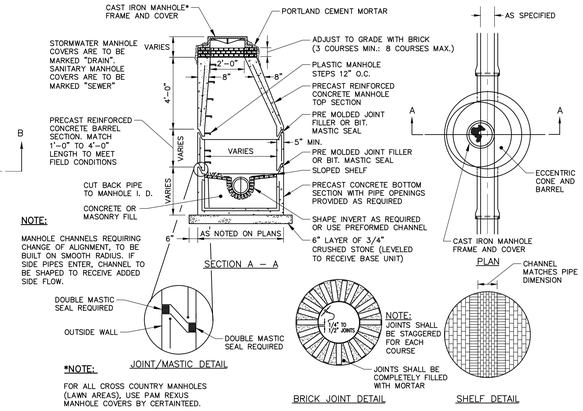

PRECAST CONCRETE MANHOLE

N.T.S.

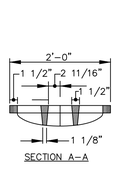

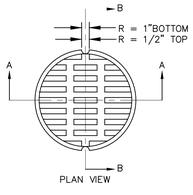

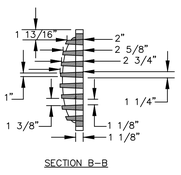

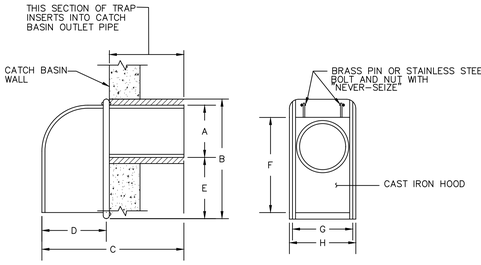

SIZE	A	B	C	D	E	F	G	H
6 in.	5 1/2"	13 3/8"	13 3/4"	5 3/8"	5 7/8"	11 5/8"	6 1/2"	7 1/4"
8 in.	7 1/2"	15"	15 3/8"	5 1/2"	5 3/8"	13 3/4"	8 3/4"	9 3/8"
10 in.	9 1/2"	16"	16 1/4"	6"	4 1/2"	14 1/8"	11 1/2"	12 3/8"
12 in.	11 1/2"	17"	22"	8"	3 1/2"	17"	12 1/2"	13 3/8"

(AS MANUFACTURED BY THE ETHERIDGE FOUNDRY IN PORTLAND, ME.)
NOTE: CONTRACTOR SHALL UTILIZE THE "CASCO TRAP" AS MANUFACTURED BY THE ETHERIDGE FOUNDRY, OR AN APPROVED EQUIVALENT.

CASCO TRAP

N.T.S.

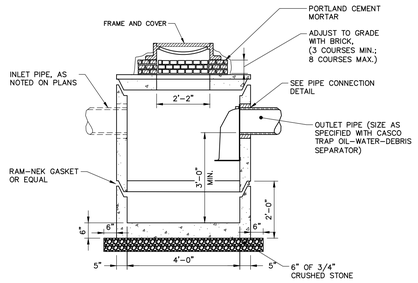

PRECAST CONCRETE CATCH BASIN

N.T.S.

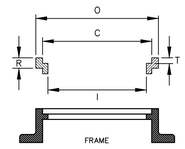

SIZE	C	R	T	O	I	Wt.
R241 1/2	24	1 1/2	1 1/8	26 1/4	22 1/2	60
R242	24	2	1 1/8	26 1/4	22 1/2	80
R242 1/2	24	2 1/2	1 1/8	26 1/4	22	100
R243	24	3	1 1/8	26 1/4	22	120

MANHOLE RISER RING

N.T.S.

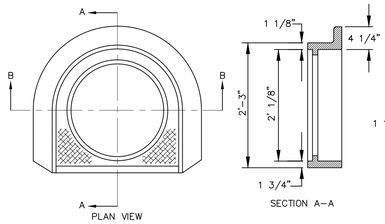

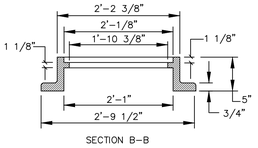

CATCH BASIN FRAME & GRATE

N.T.S.

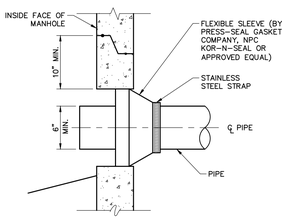

NEW PIPE TO NEW STRUCTURE CONNECTION DETAIL

N.T.S.

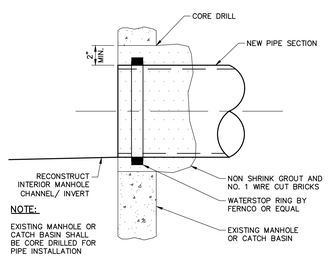

NEW PIPE TO EXISTING STRUCTURE

N.T.S.

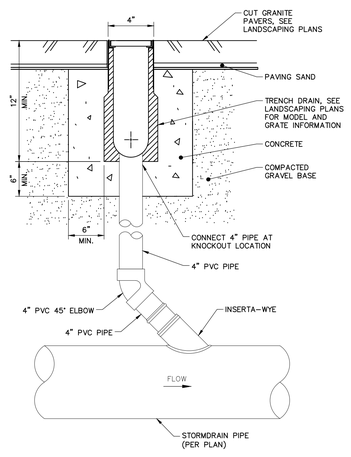

TRENCH DRAIN DETAIL

N.T.S.

41 Hutchins Drive
Portland, Maine 04102
800.426.4262 | www.woodardcurran.com
COMMITMENT & INTEGRITY DRIVE RESULTS

THIS DOCUMENT IS THE PROPERTY OF WOODARD & CURRAN INC., AND ITS CLIENT. DISCLOSURE OR REPRODUCTION WITHOUT WRITTEN CONSENT IS PROHIBITED.

STATE OF MAINE — LAUREN JANET SMETT — No. 12284 — REGISTERED PROFESSIONAL ENGINEER

REV	DESCRIPTION	DATE
	07/07 PMB 1 SUBMITTAL	

DESIGNED BY: LJS | DRAWN BY: BDM | CHECKED BY: DLC

CIVIL DETAILS - 4

PORTLAND FORESIDE DEVELOPMENT CO.
PORTLAND, ME 04102

PHASE 1 SITE PLAN SUBMISSION

JOB NO.: 022700?
DATE: NOVEMBER 2019
SCALE: AS NOTED
SHEET: 16 OF 17

C-203

NOT FOR CONSTRUCTION

\\woodardcurran.net\shares\Projects\022700?.07 PTDC - 58 Fore Block 1\wip\Drawings\Phase 1 - Site Plan Submission\022700? Phase 1 Details.dwg, Nov 08, 2019 - 2:06pm

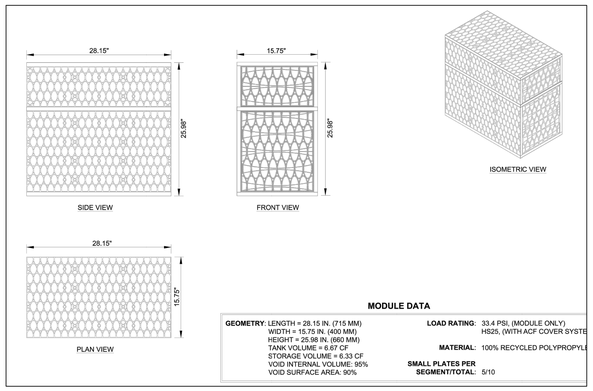

1.5 UNIT HIGH R-TANKHD MODULE DETAIL
N.T.S.

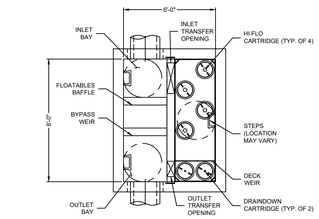

PLAN VIEW
(TOP SLAB NOT SHOWN FOR CLARITY)

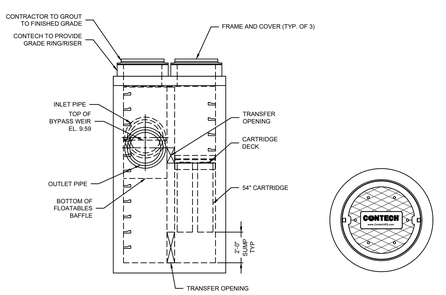

ELEVATION VIEW

FRAME AND COVER
(DIAMETER VARIES)
N.T.S.

GENERAL NOTES:
1. CONTECH TO PROVIDE ALL MATERIALS UNLESS NOTED OTHERWISE.
2. FOR SITE SPECIFIC DRAWINGS WITH DETAILED STRUCTURE DIMENSIONS AND WEIGHT, PLEASE CONTACT YOUR CONTECH ENGINEERED SOLUTIONS REPRESENTATIVE. www.ContechES.com
3. JELLYFISH WATER QUALITY STRUCTURE SHALL BE IN ACCORDANCE WITH ALL DESIGN DATA AND INFORMATION CONTAINED IN THIS DRAWING. CONTRACTOR TO CONFIRM STRUCTURE MEETS REQUIREMENTS OF PROJECT.
4. STRUCTURE SHALL MEET AASHTO HS-20 OR PER APPROVING JURISDICTION REQUIREMENTS, WHICHEVER IS MORE STRINGENT, ASSUMING EARTH COVER OF 2' - 10', AND GROUNDWATER ELEVATION AT, OR BELOW, THE OUTLET PIPE INVERT ELEVATION. CONTRACTOR TO CONFIRM ACTUAL GROUNDWATER ELEVATION. CASTINGS SHALL MEET AASHTO M306 LOAD RATING AND BE CAST WITH THE CONTECH LOGO.
5. STRUCTURE SHALL BE PRECAST CONCRETE CONFORMING TO ASTM C-857, ASTM C-918, AND AASHTO LOAD FACTOR DESIGN METHOD.
6. OUTLET PIPE INVERT IS EQUAL TO THE CARTRIDGE DECK ELEVATION.

INSTALLATION NOTES
A. CONTRACTOR TO PROVIDE EQUIPMENT WITH SUFFICIENT LIFTING AND REACH CAPACITY TO LIFT AND SET THE STRUCTURE.
B. CONTRACTOR WILL INSTALL AND LEVEL THE STRUCTURE, SEALING THE JOINTS, LINE ENTRY AND EXIT POINTS (NON-SHRINK GROUT WITH APPROVED WATERSTOP OR FLEXIBLE BOOT).
C. CARTRIDGE INSTALLATION, BY CONTECH, SHALL OCCUR ONLY AFTER SITE HAS BEEN STABILIZED AND THE JELLYFISH UNIT IS CLEAN AND FREE OF DEBRIS. CONTACT CONTECH TO COORDINATE CARTRIDGE INSTALLATION WITH SITE STABILIZATION.

PEAK DIVERSION JELLYFISH FILTER #1
N.T.S.

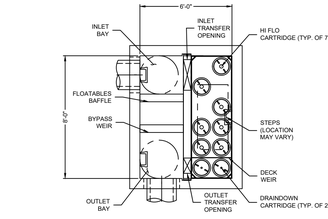

PLAN VIEW
(TOP SLAB NOT SHOWN FOR CLARITY)

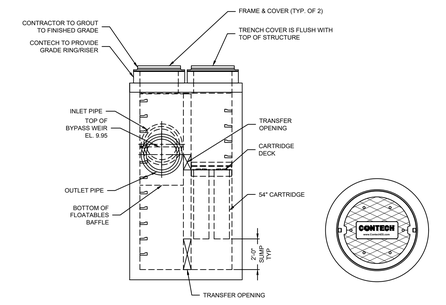

ELEVATION VIEW

FRAME AND COVER
(DIAMETER VARIES)
N.T.S.

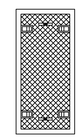

24" TRENCH COVER
(LENGTH VARIES)
N.T.S.

GENERAL NOTES:
1. CONTECH TO PROVIDE ALL MATERIALS UNLESS NOTED OTHERWISE.
2. FOR SITE SPECIFIC DRAWINGS WITH DETAILED STRUCTURE DIMENSIONS AND WEIGHT, PLEASE CONTACT YOUR CONTECH ENGINEERED SOLUTIONS REPRESENTATIVE. www.ContechES.com
3. JELLYFISH WATER QUALITY STRUCTURE SHALL BE IN ACCORDANCE WITH ALL DESIGN DATA AND INFORMATION CONTAINED IN THIS DRAWING. CONTRACTOR TO CONFIRM STRUCTURE MEETS REQUIREMENTS OF PROJECT.
4. STRUCTURE SHALL MEET AASHTO HS-20 OR PER APPROVING JURISDICTION REQUIREMENTS, WHICHEVER IS MORE STRINGENT, ASSUMING EARTH COVER OF 2' - 10', AND GROUNDWATER ELEVATION AT, OR BELOW, THE OUTLET PIPE INVERT ELEVATION. CONTRACTOR TO CONFIRM ACTUAL GROUNDWATER ELEVATION. CASTINGS SHALL MEET AASHTO M306 LOAD RATING AND BE CAST WITH THE CONTECH LOGO.
5. STRUCTURE SHALL BE PRECAST CONCRETE CONFORMING TO ASTM C-857, ASTM C-918, AND AASHTO LOAD FACTOR DESIGN METHOD.
6. OUTLET PIPE INVERT IS EQUAL TO THE CARTRIDGE DECK ELEVATION.

INSTALLATION NOTES
A. CONTRACTOR TO PROVIDE EQUIPMENT WITH SUFFICIENT LIFTING AND REACH CAPACITY TO LIFT AND SET THE STRUCTURE.
B. CONTRACTOR WILL INSTALL AND LEVEL THE STRUCTURE, SEALING THE JOINTS, LINE ENTRY AND EXIT POINTS (NON-SHRINK GROUT WITH APPROVED WATERSTOP OR FLEXIBLE BOOT).
C. CARTRIDGE INSTALLATION, BY CONTECH, SHALL OCCUR ONLY AFTER SITE HAS BEEN STABILIZED AND THE JELLYFISH UNIT IS CLEAN AND FREE OF DEBRIS. CONTACT CONTECH TO COORDINATE CARTRIDGE INSTALLATION WITH SITE STABILIZATION.

PEAK DIVERSION JELLYFISH FILTER #2
N.T.S.

NOTES
1. THIS PORT IS USED TO PUMP WATER INTO THE SYSTEM AND RE-SUSPEND ACCUMULATED SEDIMENT SO THAT IT MAY BE PUMPED OUT.
2. MINIMUM REQUIRED MAINTENANCE INCLUDES A QUARTERLY INSPECTION DURING THE FIRST YEAR OF OPERATION AND A YEARLY INSPECTION THEREAFTER. FLUSH AS NEEDED.
3. ONLY R-TANK® AND R-TANKHD MAY BE USED IN TRAFFIC APPLICATIONS.
4. SEE TRAFFIC LOADING DETAIL FOR MINIMUM & MAXIMUM COVER REQUIREMENTS.

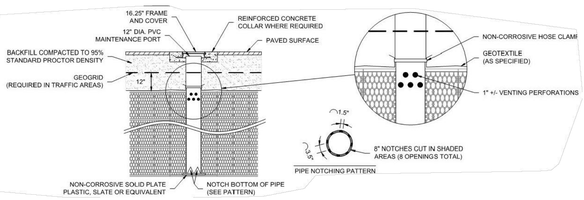

R-TANKHD TYPICAL MAINTENANCE PORT
N.T.S.

NOT FOR CONSTRUCTION

41 Hutchins Drive
Portland, Maine 04102
800.426.4262 | www.woodardcurran.com
COMMITMENT & INTEGRITY DRIVE RESULTS

THIS DOCUMENT IS THE PROPERTY OF WOODARD & CURRAN INC., AND ITS CLIENT. DISCLAIMER OF WARRANTIES AND LIMITATION OF LIABILITY APPLIES.

STATE OF MAINE
LAUREN MARIE SMETT
No. 12284
REGISTERED PROFESSIONAL ENGINEER

REV	DESCRIPTION	DATE
	07/07 PMB 1 TO 1.5 Fig	

DESIGNED BY: LJS | DRAWN BY: BDM | CHECKED BY: DLC

CIVIL DETAILS - 5

PORTLAND FORESIDE DEVELOPMENT CO.
PORTLAND, ME 04102

PHASE 1 SITE PLAN SUBMISSION

JOB NO.: 022700?
DATE: NOVEMBER 2019
SCALE: AS NOTED
SHEET: 17 OF 17

C-204

\\woodardcurran.net\shares\Projects\022700?.07 PFDC - 58 Fore Block 1\wip\Drawings\Phase 1 - Site Plan Submission\022700? Phase 1 Details.dwg, Nov 08, 2019 - 2:06pm

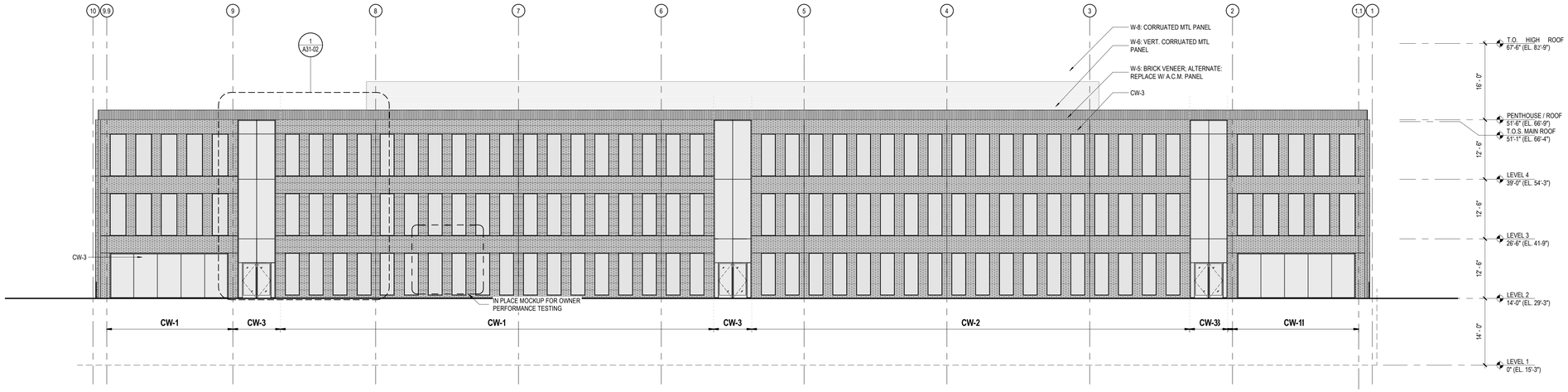

2 NORTH ELEVATION
3/32" = 1'-0"

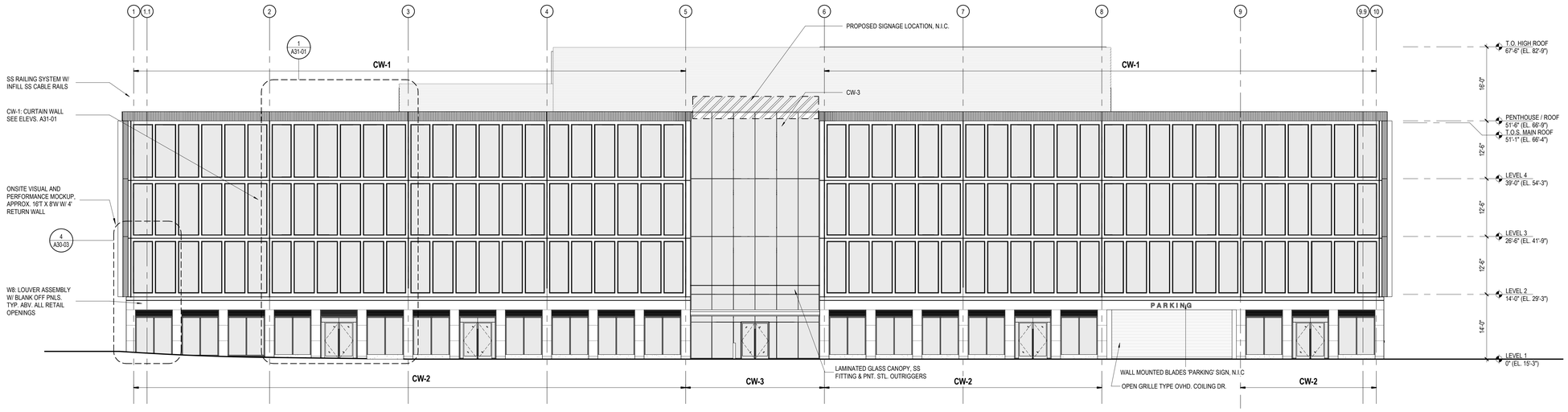

1 SOUTH ELEVATION
3/32" = 1'-0"

EXTERIOR CURTAINWALL BoD LEGEND:

CW-1 : KAWNEER 1600 UT W/ PROJECTED, PRESSURE CAP. BLACK ANNODIZED FINISH, SOLARBAN 60 GLAZING, 1" IGU

CW-2 : KANEER 1600 UT W/ PROJECTED, PRESSURE CAP & EXTERIOR APPLIED MUNTIN GRID. BLACK ANNODIZED FINISH. SOLAR BAN 60 GLAZING, 1" IGU

CW-3: 4 SIDED SSG TOGGLE SYSTEM. SOLARBAN 60 GLAZING, 1" IGU

Perkins&Will

225 Franklin Street, Suite 1100
Boston, MA 02110
t 617.478.0300
www.perkinswill.com

CONSULTANTS

CIVIL ENGINEER
Woodard & Curran
41 Hutchins Dr
Portland, ME 04102
t 207.774.2112

STRUCTURAL + MEP ENGINEER
Rist-Frost-Shumway Engineering
50 Milk Street, 16th Floor
Boston, MA 02109
t 617.494.1464

OWNER'S CONSULTANT

LANDSCAPE ARCHITECT
Michael Boucher
457 US Route 1 Suite 2
Freeport, Maine
t 207.865.1080

PROJECT

BUILDING 1A
58 FORE ST
PORTLAND, ME 04101

FORESIDE
PORTLAND, MAINE
254 COMMERCIAL ST
SUITE 118
PORTLAND, ME 04101

KEYPLAN

NOT FOR CONSTRUCTION

ISSUE CHART

MARK	ISSUE	DATE

DESIGN DEVELOPMENT
JULY 26, 2019

Job Number	157087.000
Drawn	Author
Checked	Checker
Approved	Approver

TITLE

BUILDING ELEVATIONS

SHEET NUMBER

A20-01

Copyright © 2019 Perkins+Will

11/4/2019 10:17:43 PM C:\Temp\58 Fore St_Building 1A_v2019_5orr5.rvt

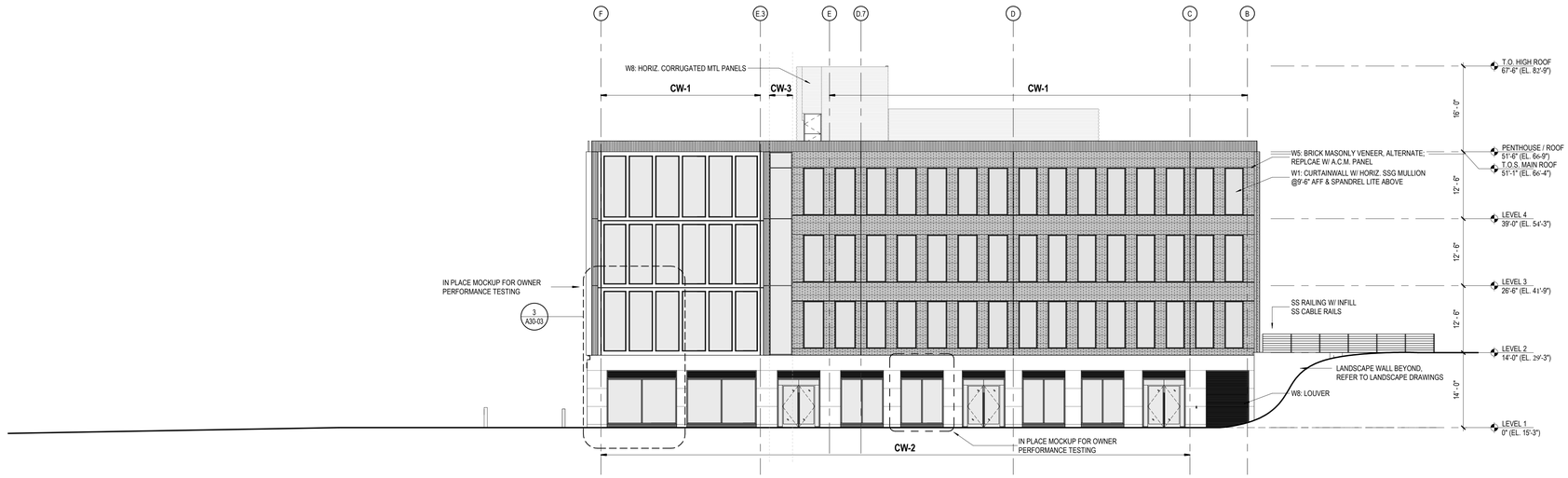

2 EAST ELEVATION
3/32" = 1'-0"

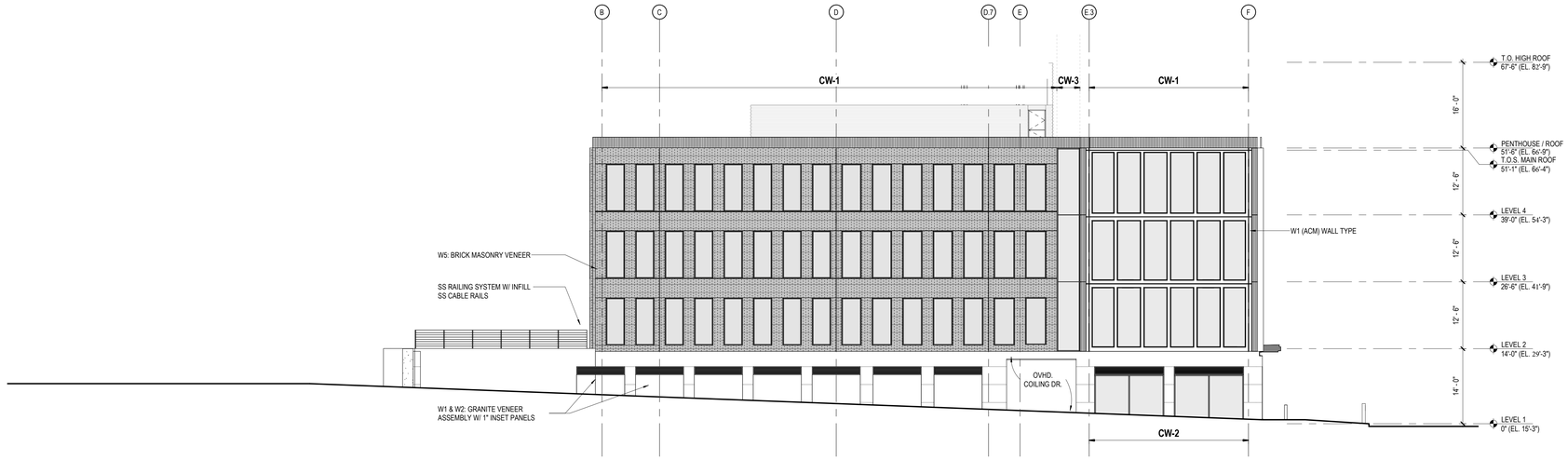

1 WEST ELEVATION
3/32" = 1'-0"

EXTERIOR CURTAINWALL BoD LEGEND:

CW-1 : KAWNEER 1600 UT W/ PROJECTED, PRESSURE CAP.
BLACK ANNODIZED FINISH, SOLARBAN 60 GLAZING, 1" IGU

CW-2 : KANEER 1600 UT W/ PROJECTED, PRESSURE CAP &
EXTERIOR APPLIED MUNTIN GRID. BLACK ANNODIZED
FINISH. SOLAR BAN 60 GLAZING, 1" IGU

CW-3: KANEER 'CLEAR WALL', 4 SIDED TOGGLE SYSTEM.
SOLARBAN 60 GLAZING, 1" IGU

Perkins&Will

225 Franklin Street, Suite 1100
Boston, MA 02110
t 617.478.0300
www.perkinswill.com

CONSULTANTS

CIVIL ENGINEER
Woodard & Curran
41 Hutchins Dr
Portland, ME 04102
t 207.774.2112

STRUCTURAL + MEP ENGINEER
Rist-Frost-Shumway Engineering
50 Milk Street, 16th Floor
Boston, MA 02109
t 617.494.1464

OWNER'S CONSULTANT

LANDSCAPE ARCHITECT
Michael Boucher
457 US Route 1 Suite 2
Freeport, Maine
t 207.865.1080

PROJECT

BUILDING 1A
58 FORE ST
PORTLAND, ME 04101

FORESIDE
PORTLAND, MAINE
254 COMMERCIAL ST
SUITE 118
PORTLAND, ME 04101

KEYPLAN

NOT FOR CONSTRUCTION

ISSUE CHART

MARK	ISSUE	DATE

DESIGN DEVELOPMENT
JULY 26, 2019

Job Number	157087.000
Drawn	Author
Checked	Checker
Approved	Approver

TITLE

BUILDING ELEVATIONS

SHEET NUMBER

A20-02

Copyright © 2019 Perkins+Will

11/4/2019 10:10:56 PM C:\Temp\58 Fore St_Building 1A_v2019_SonS.rvt



2 BUILDING 12 - NORTHWEST ELEVATION
SCALE: 1/4" = 1'-0"

Bruner/Cott
ARCHITECTS
225 Friend St., Suite 701
Boston, MA 02114
617.492.8400
www.brunercott.com

Rev.	Date	Remarks

PORTLAND FORESIDE - BUILDING 12

Date	OCTOBER 25, 2019
Scale	1/4" = 1'-0"
Project Number	19.007
Drawn By	Author

BUILDING 12 - EXTERIOR ELEVATIONS

A-301

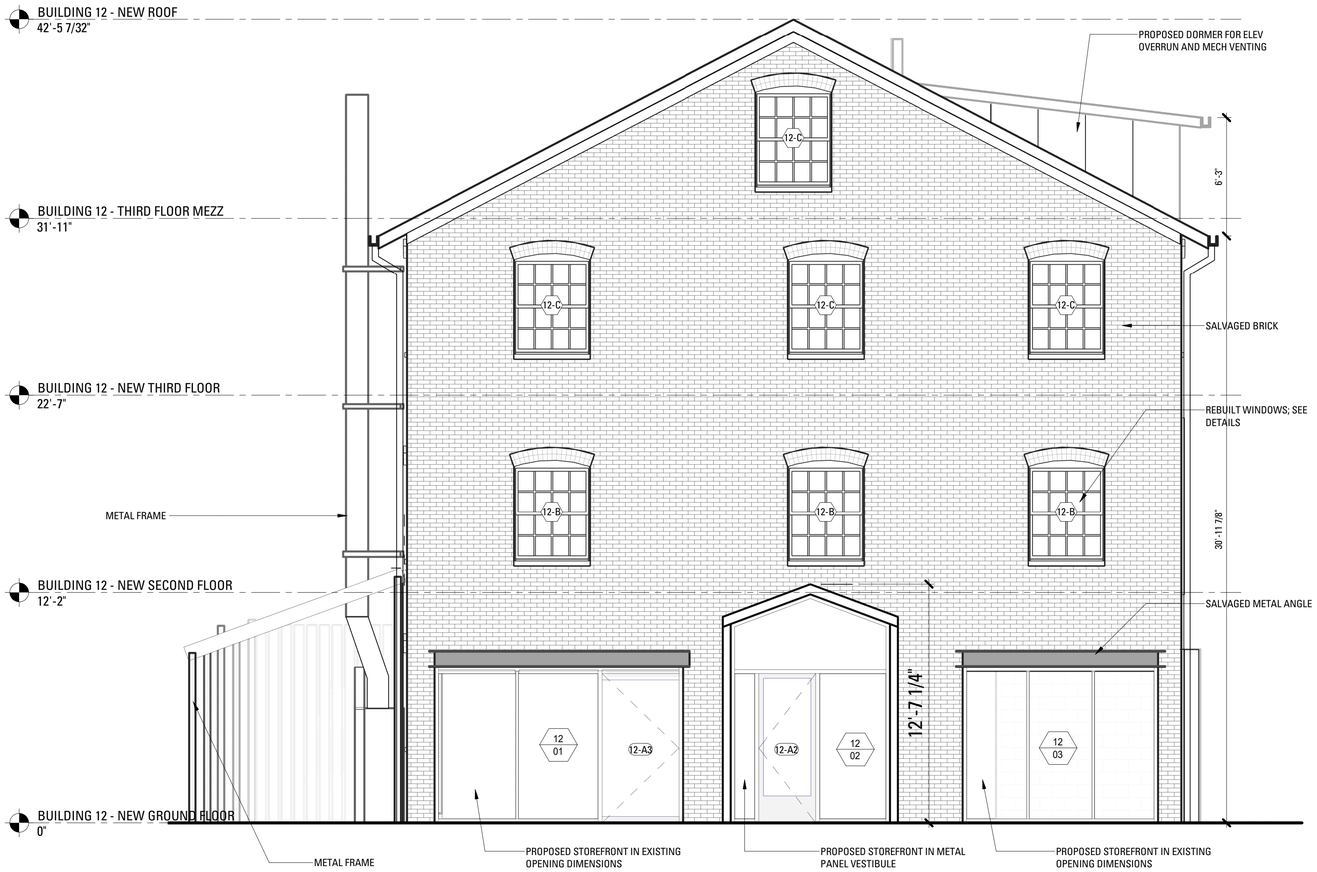

1 BUILDING 12 - NORTHEAST ELEVATION
SCALE: 1/4" = 1'-0"

Bruner/Cott
ARCHITECTS
225 Friend St., Suite 701
Boston, MA 02114
617.492.8400
www.brunercott.com

Rev.	Date	Remarks

PORTLAND FORESIDE - BUILDING 12

Date	OCTOBER 25, 2019
Scale	1/4" = 1'-0"
Project Number	19.007
Drawn By	Author

EXTERIOR ELEVATIONS

A-302



1 BUILDING 12 - SOUTHEAST ELEVATION
SCALE: 1/4" = 1'-0"

Bruner/Cott
ARCHITECTS
225 Friend St., Suite 701
Boston, MA 02114
617.492.8400
www.brunercott.com

Rev.	Date	Remarks

PORTLAND FORESIDE - BUILDING 12

EXTERIOR ELEVATIONS

Date	OCTOBER 25, 2019
Scale	1/4" = 1'-0"
Project Number	19.007
Drawn By	Author

A-303

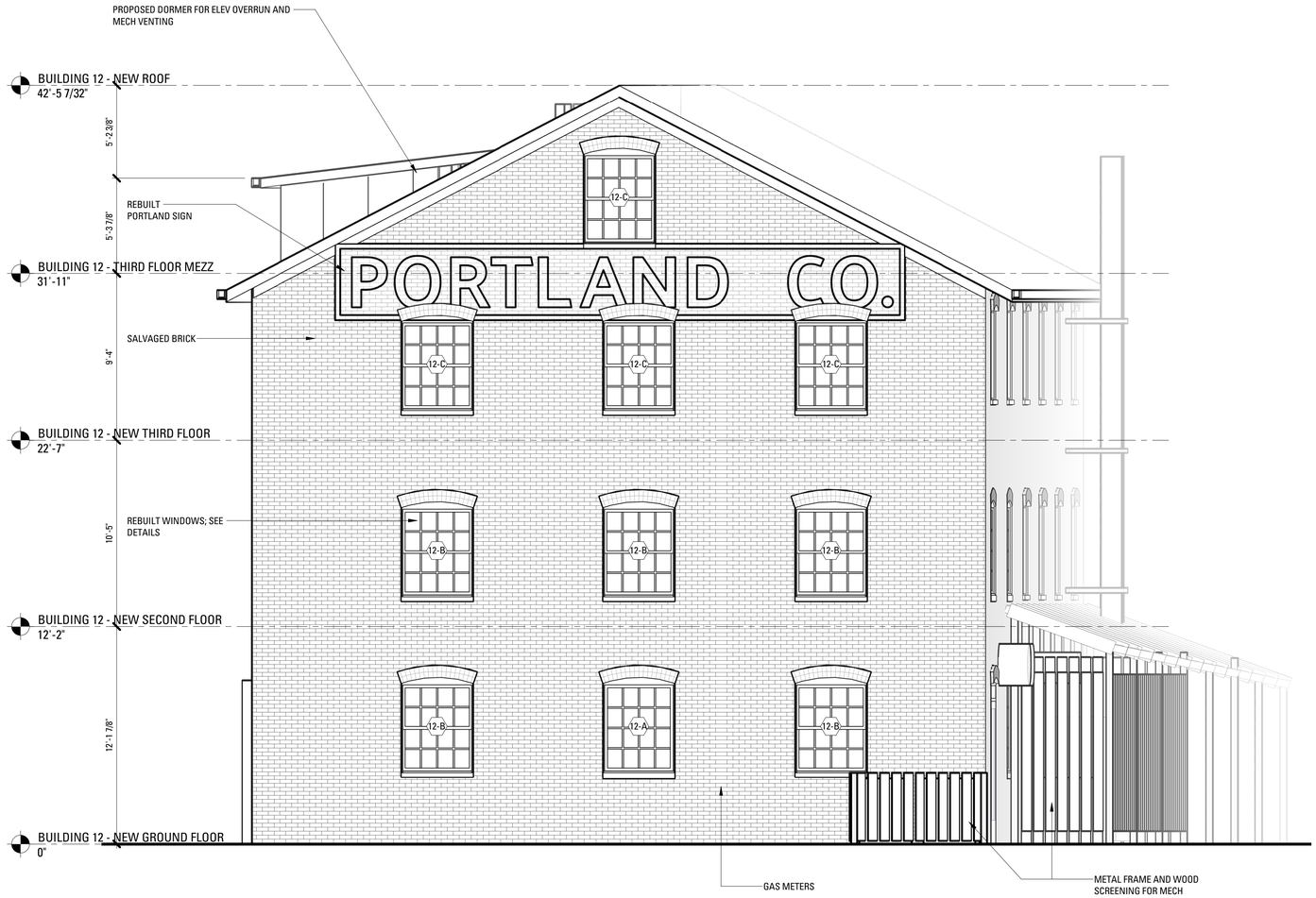

1 BUILDING 12 - SOUTHWEST ELEVATION
SCALE: 1/4" = 1'-0"

Bruner/Cott
ARCHITECTS
225 Friend St., Suite 701
Boston, MA 02114
617.492.8400
www.brunercott.com

Rev.	Date	Remarks

PORTLAND FORESIDE - BUILDING 12

Date	OCTOBER 25, 2019
Scale	1/4" = 1'-0"
Project Number	19.007
Drawn By	Author

EXTERIOR ELEVATION

A-304

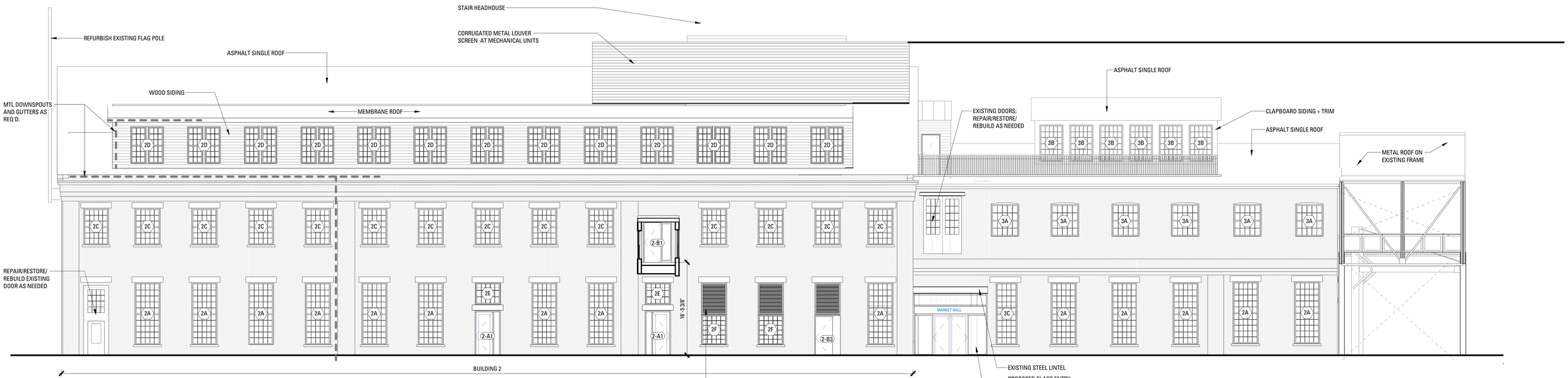

1 BUILDING 2/3 -PROPOSED SOUTH ELEVATION
SCALE: 1/8" = 1'-0"

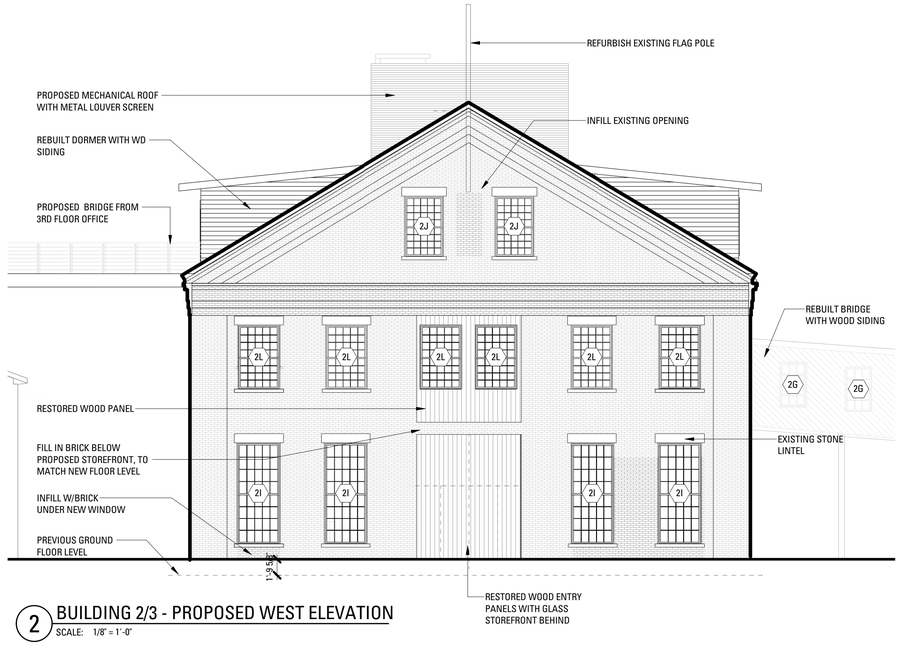

2 BUILDING 2/3 - PROPOSED WEST ELEVATION
SCALE: 1/8" = 1'-0"

Bruner/Cott
ARCHITECTS
225 Friend St., Suite 701
Boston, MA 02114
617.492.8400
www.brunercott.com

Rev.	Date	Remarks

PORTLAND FORESIDE BLOCK 2

Date	OCTOBER 25, 2019
Scale	1/8" = 1'-0"
Project Number	
Drawn By	Author

BUILDING 2/3- PROPOSED FACADE

A-300P



1 Building 2/3 - PROPOSED NORTH ELEVATION
SCALE: 1/8" = 1'-0"

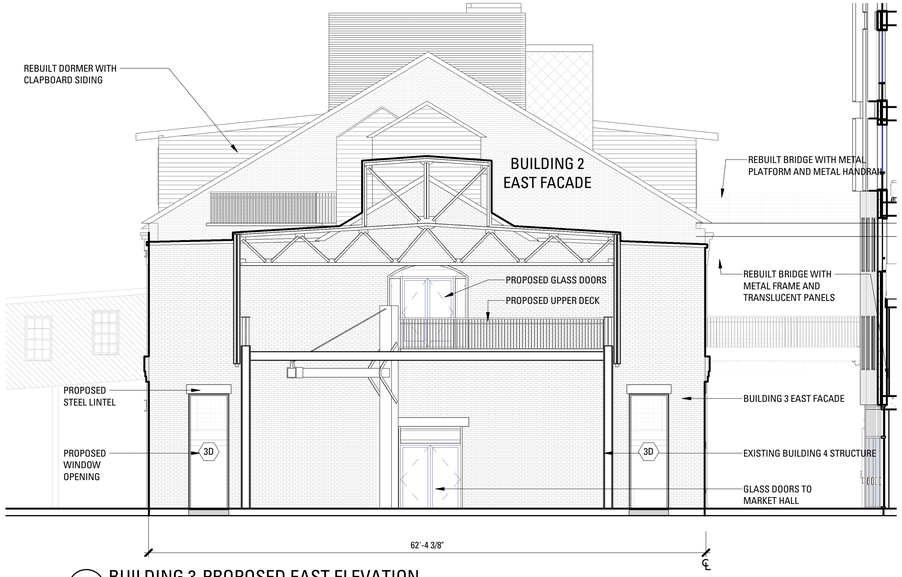

2 BUILDING 3-PROPOSED EAST ELEVATION
SCALE: 1/8" = 1'-0"

Bruner/Cott
ARCHITECTS
225 Friend St., Suite 701
Boston, MA 02114
617.492.8400
www.brunercott.com

Rev.	Date	Remarks

PORTLAND FORESIDE BLOCK 2

Date	OCTOBER 25, 2019
Scale	1/8" = 1'-0"
Project Number	
Drawn By	Author

BUILDING 2/3- PROPOSED FACADE

A-301P

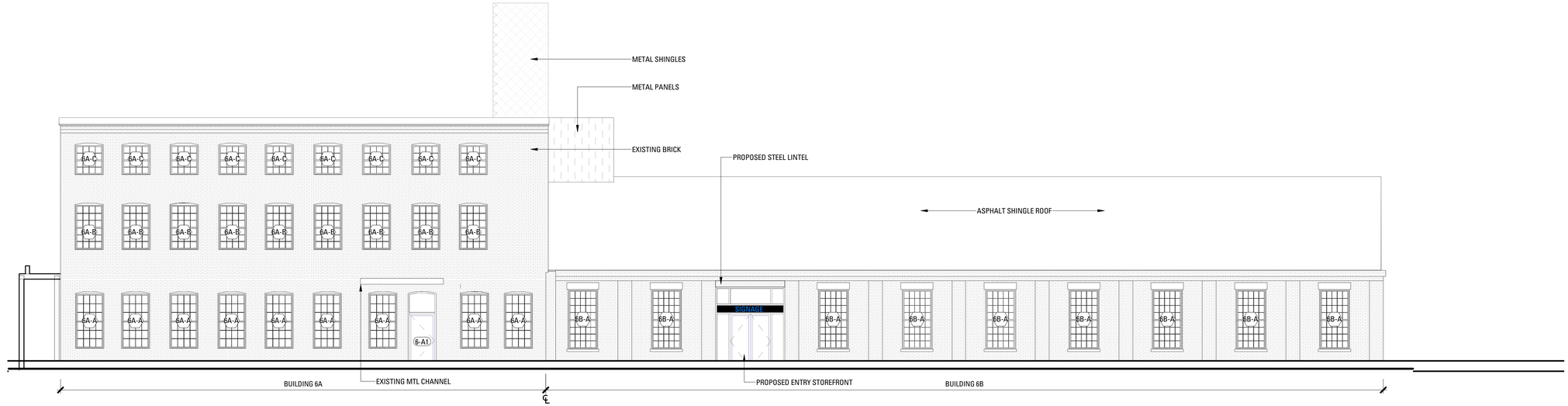

2 BUILDING 6- SOUTH ELEVATION Copy 1
SCALE: 1/8" = 1'-0"

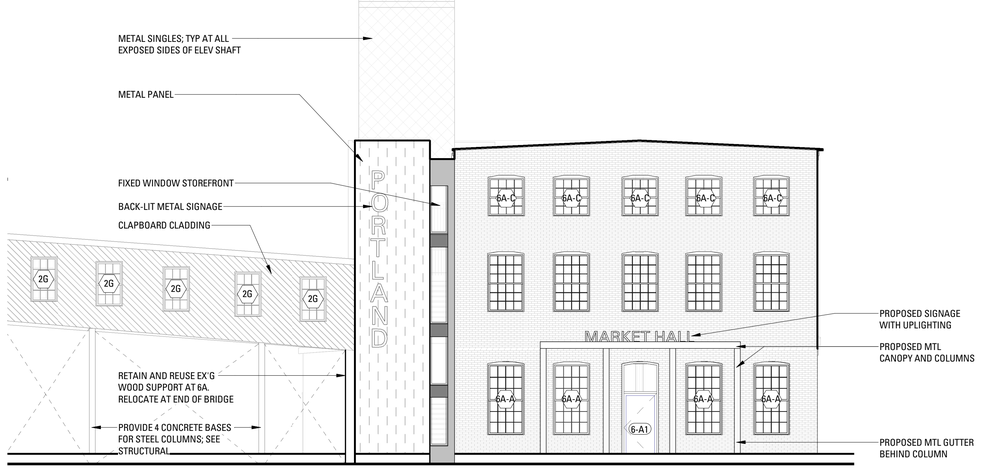

1 BUILDING 6 - WEST ELEVATION Copy 1
SCALE: 1/8" = 1'-0"

Bruner/Cott
ARCHITECTS
225 Friend St., Suite 701
Boston, MA 02114
617.492.8400
www.brunercott.com

Rev.	Date	Remarks

PORTLAND FORESIDE BLOCK 2

Date	OCTOBER 25, 2019
Scale	1/8" = 1'-0"
Project Number	
Drawn By	Author

BUILDING 6A/6B- PROPOSED FACADE

A-312P

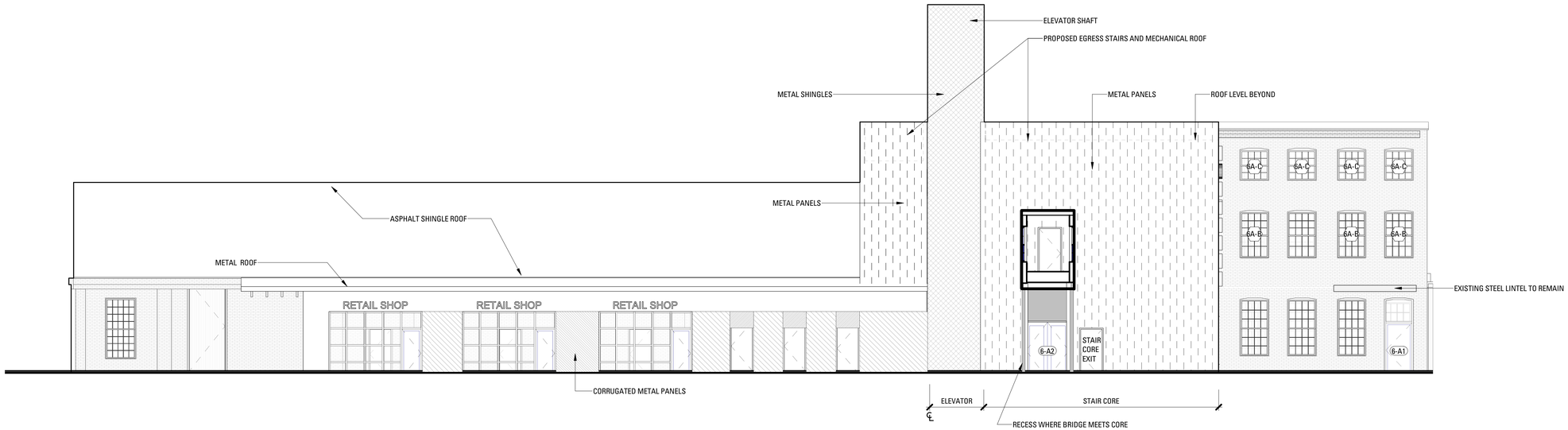

1 BLDG 6 - NORTH ELEVATION
SCALE: 1/8" = 1'-0"

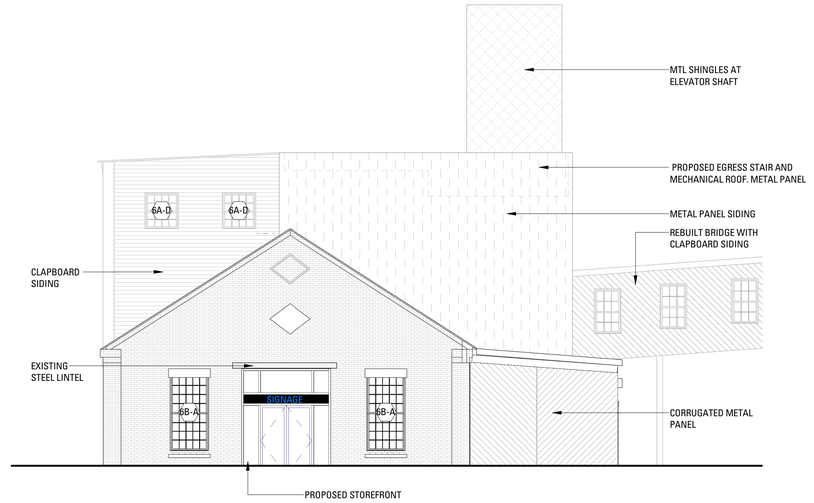

2 BLDG 6 - EAST ELEVATION
SCALE: 1/8" = 1'-0"

Bruner/Cott
ARCHITECTS
225 Friend St., Suite 701
Boston, MA 02114
617.492.8400
www.brunercott.com

Rev.	Date	Remarks

PORTLAND FORESIDE BLOCK 2

Date	OCTOBER 25, 2019
Scale	1/8" = 1'-0"
Project Number	
Drawn By	Author

BUILDING 6A/6B- PROPOSED FACADE

A-313P

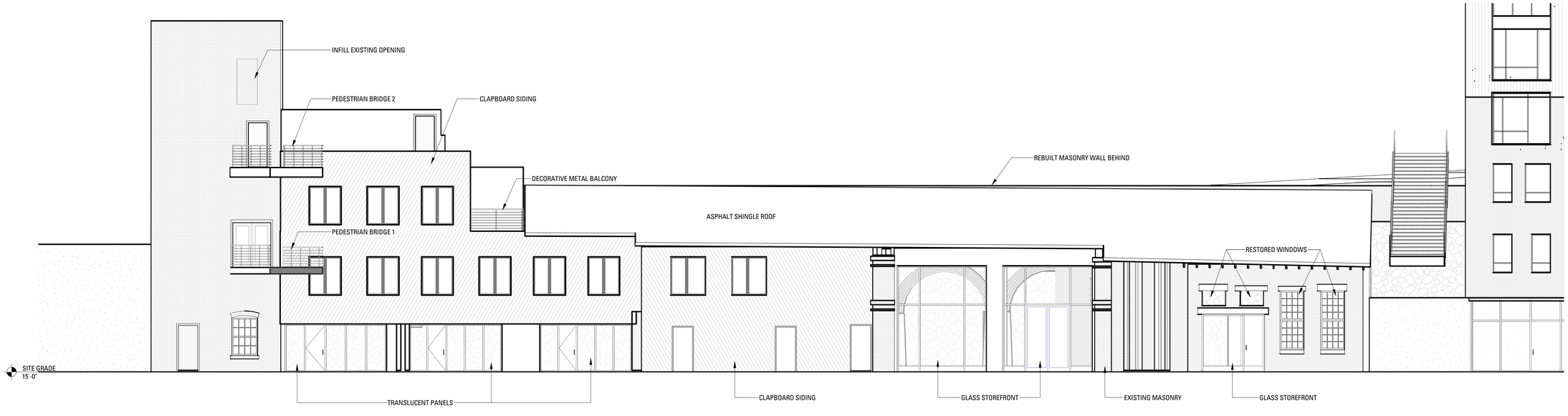

1 EMBANKMENT - PROPOSED SOUTH ELEVATION - NARROW ALLEY

SCALE: 1/8" = 1'-0"

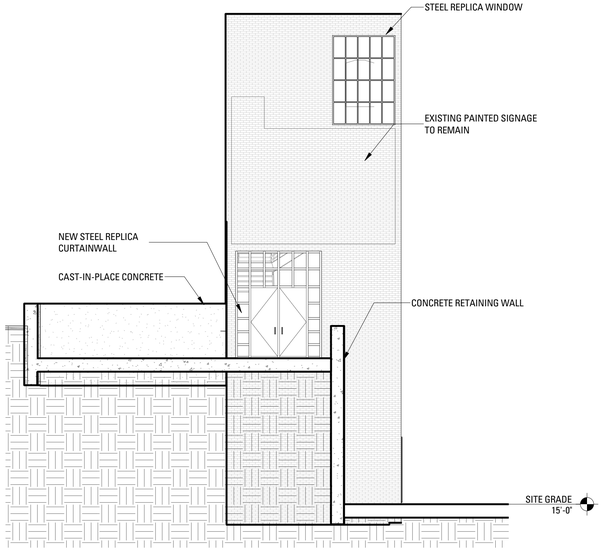

3 EMBANKMENT - PROPOSED WEST ELEVATION

SCALE: 1/8" = 1'-0"

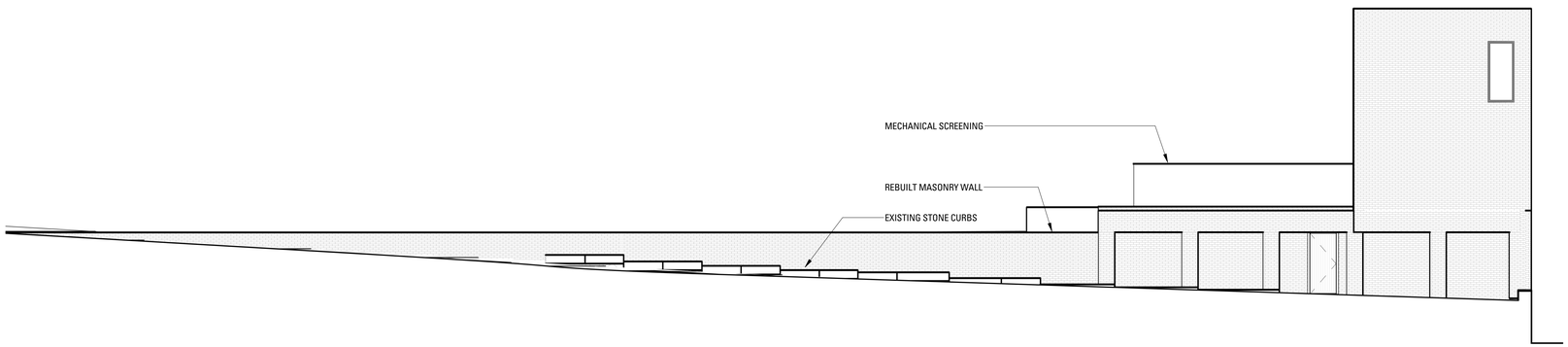

2 EMBANKMENT - PROPOSED NORTH ELEVATION - FORE STREET

SCALE: 1/8" = 1'-0"

Bruner/Cott
ARCHITECTS
225 Friend St., Suite 701
Boston, MA 02114
617.492.8400
www.brunercott.com

Rev.	Date	Remarks

PORTLAND FORESIDE BLOCK 2

Date	OCTOBER 25, 2019
Scale	1/8" = 1'-0"
Project Number	
Drawn By	Author

EMBANKMENT - PROPOSED ELEVATIONS

A-331P

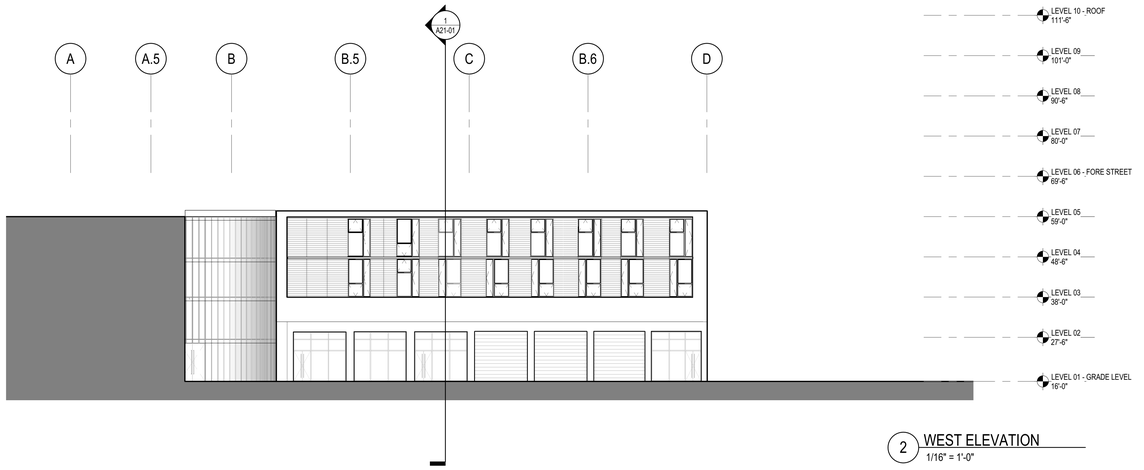

2 WEST ELEVATION
1/16" = 1'-0"

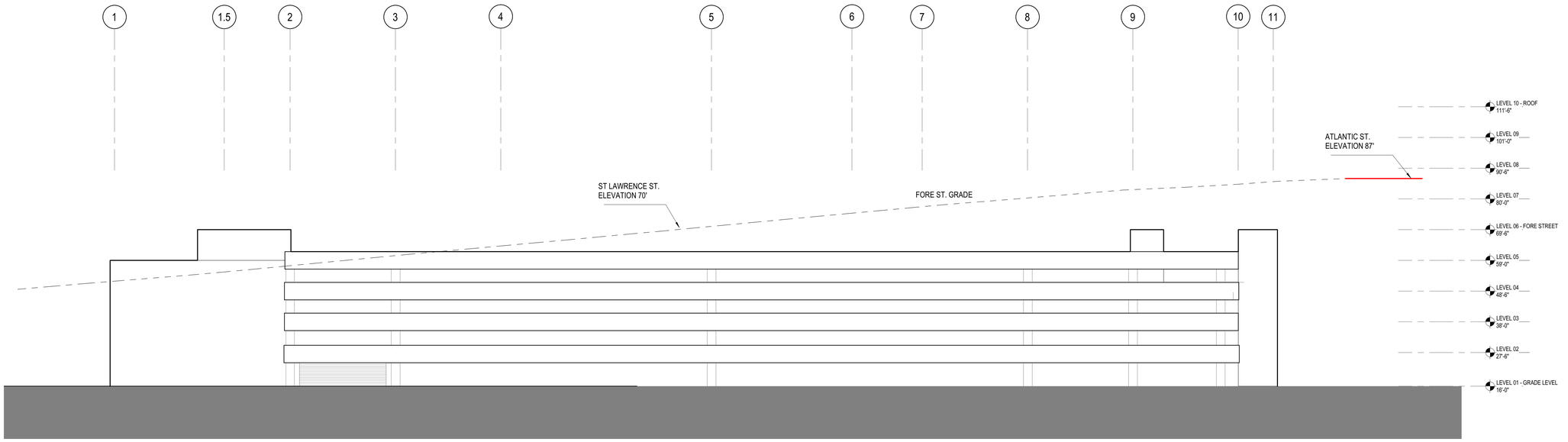

1 SOUTH ELEVATION
1/16" = 1'-0"

11/8/2019 2:18:25 PM C:\Temp\58 FORE ST MASTERPLAN_Block Four_v2019_SiempatoubaA.rvt

Perkins&Will

225 Franklin Street, Suite 1100
Boston, MA 02110
t 617.478.0300
f 617.478.0321
www.perkinswill.com

CONSULTANTS

STRUCTURAL ENGINEER
Thorton Tomasetti / Becker Structural Engineers
75 York St
Portland, ME 04101
t 207.879.1838
f 207.879.1822

MEP ENGINEER
Rist-Frost-Shumway Engineering
50 Milk St
Boston, MA 02110
t 617.494.1464

OWNER'S CONSULTANTS

CIVIL ENGINEER
51 Hutchins Dr
Portland, ME 04102
t 207.774.2112

LANDSCAPE ARCHITECT
Michael Boucher Landscape Architecture
457 US Route 1, Suite 2
Freeport, ME 04032
t 207.865.1080
f 207.865.1455

GENERAL CONTRACTOR
Consigli
15 Franklin St
Portlan, ME 04101
t 207.773.3000

PROJECT

BLOCK FOUR

FORESIDE
PORTLAND, MAINE

PORTLAND FORESIDE DEVELOPMENT COMPANY
254 COMMERCIAL ST SUITE 118
PORTLAND, ME 04101

KEYPLAN

ISSUE CHART

MARK	ISSUE	DATE

100% SCHEMATIC DESIGN 11/08/2019

Job Number	157031.001
Drawn	Author
Checked	Checker
Approved	Approver

TITLE

EXTERIOR ELEVATIONS - PHASE I

SHEET NUMBER

A20-01

Copyright © 2016 Perkins+Will



1 TOWNHOUSE SOUTH ELEVATION
SCALE: 1/8" = 1'-0"

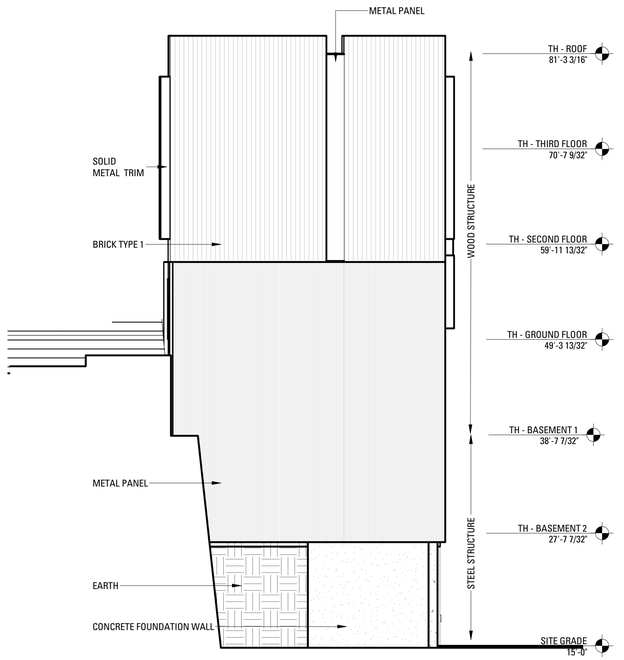

4 TOWNHOUSE WEST ELEVATION
SCALE: 1/8" = 1'-0"

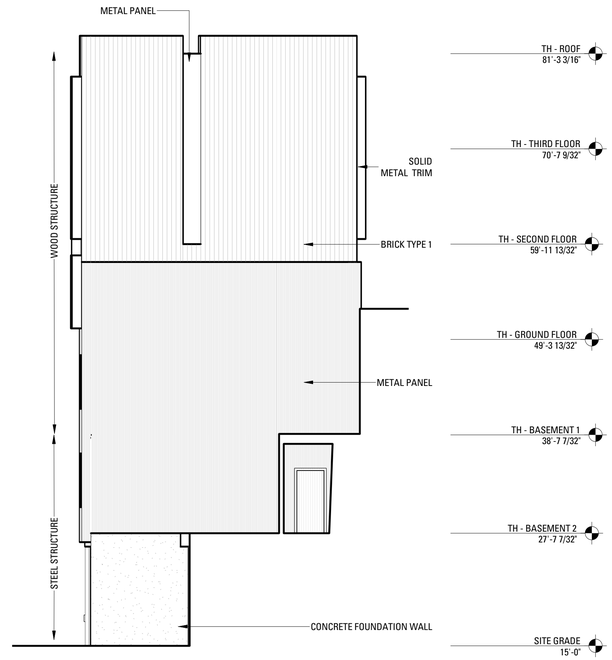

3 TOWNHOUSE EAST ELEVATION
SCALE: 1/8" = 1'-0"



2 TOWNHOUSE NORTH ELEVATION
SCALE: 1/8" = 1'-0"

Bruner/Cott
ARCHITECTS
225 Friend St., Suite 701
Boston, MA 02114
617.492.8400
www.brunercott.com

Rev.	Date	Remarks

PORTLAND FORESIDE BLOCK 2

Date	OCTOBER 25, 2019
Scale	1/8" = 1'-0"
Project Number	
Drawn By	Author

TOWNHOUSE - PROPOSED FACADE

A-321P

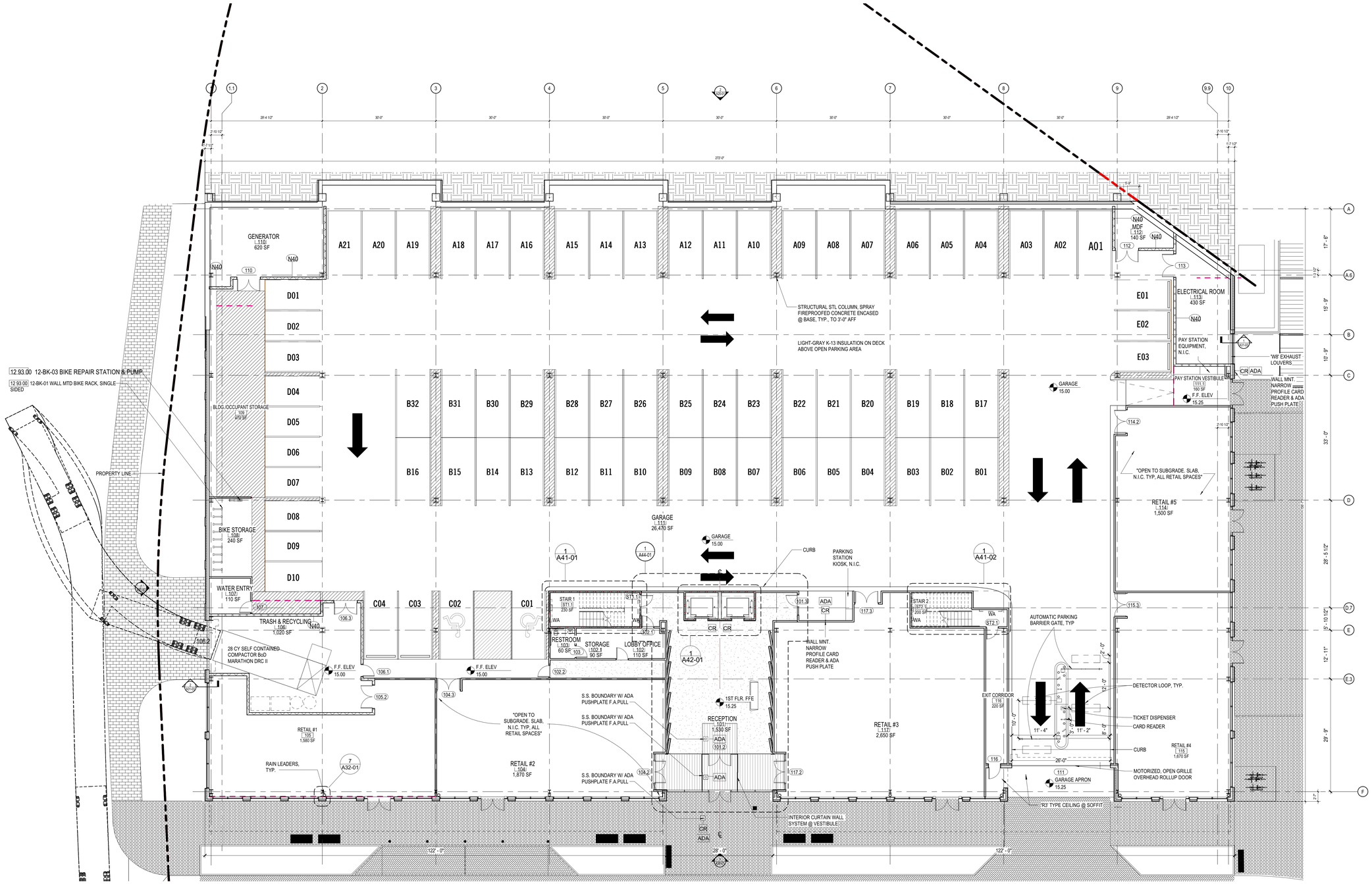

PARTITION & DOOR NOTES

1. PARTITIONS LOCATED BY DIMENSION STRING ARE DIMENSIONED TO THE UNFINISHED FACE OF THE WALL UNLESS NOTED OTHERWISE.

2. PARTITIONS NOT DIMENSIONED ARE GENERALLY LOCATED BY ONE OF THE FOLLOWING CRITERIA:

   2.1 CENTERLINE - CENTER OF PARTITION ALIGNS WITH THE CENTER OF GRIDLINE OR OBJECT CENTERLINE (SUCH AS A COLUMN OR WINDOW MULLION).
   CENTER THE OVERALL PARTITION WIDTH, RATHER THAN STUD WIDTH ON THE RELATED CENTERLINE.

   2.2 ALIGN - LOCATE PARTITION FLUSH WITH FACE OF ANOTHER PARTITION OR ANOTHER SURFACE AS INDICATED.

   2.3 SPECIFICALLY MAINTAIN DIMENSIONS NOTED AS "MINIMUM" OR "CLEAR".

3. DOOR OPENINGS ARE DIMENSIONED TO CENTERLINE OF OPENING. IF NOT DIMENSIONED, THE HINGE SIDE OF DOOR SHALL BE SPACED 4" (INCLUDING THE JAMB) FROM THE ADJACENT WALL.

4. ALL INTERIOR PARTITIONS TO BE TYPE 'A41' U.N.O.

1 LEVEL 1 PLAN
3/32" = 1'-0"

PARKING SCHEDULE	CURRENT - 07.08.2019	SD - 10.31.2018
ELEVATOR	2	3
COMPACT (8'x15')	13	4
REGULAR (9' x 18')	55	53
Grand total: 70	70	60

397 SF/SPACE

Perkins&Will

225 Franklin Street, Suite 1100
Boston, MA 02110
t 617.478.0000
www.perkinswill.com

CONSULTANTS

CIVIL ENGINEER
Woodard & Curran
41 Hutchins Dr
Portland, ME 04102
t 207.774.2112

STRUCTURAL + MEP ENGINEER
Rist-Frost-Shumway Engineering
50 Milk Street, 16th Floor
Boston, MA 02109
t 617.494.1464

OWNER'S CONSULTANT

LANDSCAPE ARCHITECT
Michael Boucher
457 US Route 1 Suite 2
Freeport, Maine
t 207.865.1080

PROJECT

BUILDING 1A
58 FORE ST
PORTLAND, ME 04101

FORESIDE
254 COMMERCIAL ST
SUITE 118
PORTLAND, ME 04101

KEYPLAN

NOT FOR CONSTRUCTION

ISSUE CHART

MARK	ISSUE	DATE

DESIGN DEVELOPMENT
JULY 26, 2019

Job Number	157087.000
Drawn	Author
Checked	Checker
Approved	Approver

TITLE

LEVEL 1 PLAN

SHEET NUMBER

A10-01

Copyright © 2019 Perkins+Will

10/29/2019 5:31:26 PM C:\Temp\58 Fore St_Building 1A_v2019_SlampakoulisA.rvt

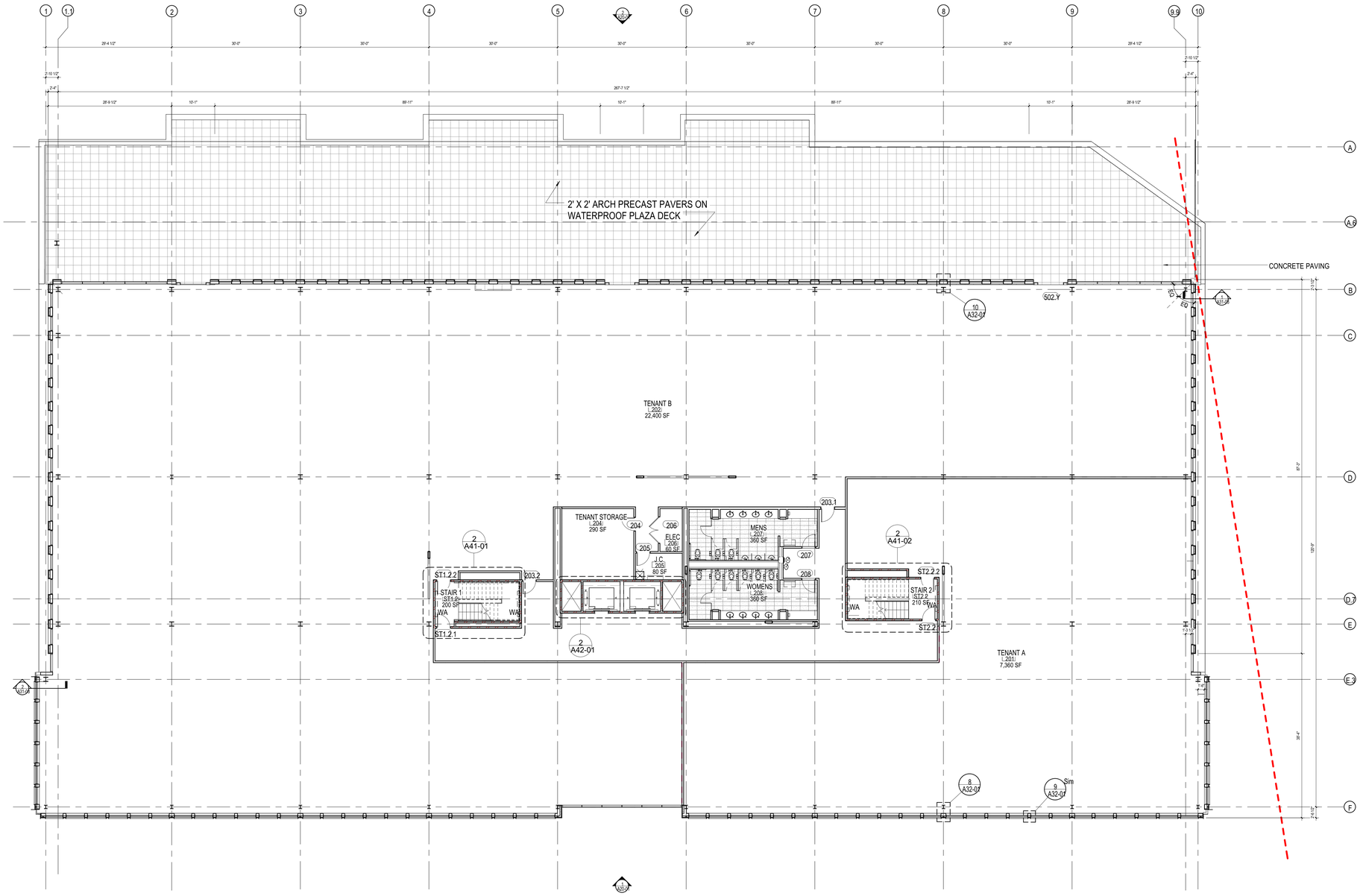

PARTITION & DOOR NOTES

1. PARTITIONS LOCATED BY DIMENSION STRING ARE DIMENSIONED TO THE UNFINISHED FACE OF THE WALL UNLESS NOTED OTHERWISE.

2. PARTITIONS NOT DIMENSIONED ARE GENERALLY LOCATED BY ONE OF THE FOLLOWING CRITERIA:

   2.1 CENTERLINE - CENTER OF PARTITION ALIGNS WITH THE CENTER OF GRIDLINE OR OBJECT CENTERLINE (SUCH AS A COLUMN OR WINDOW MULLION).
   CENTER THE OVERALL PARTITION WIDTH, RATHER THAN STUD WIDTH ON THE RELATED CENTERLINE.

   2.2 ALIGN - LOCATE PARTITION FLUSH WITH FACE OF ANOTHER PARTITION OR ANOTHER SURFACE AS INDICATED.

   2.3 SPECIFICALLY MAINTAIN DIMENSIONS NOTED AS "MINIMUM" OR "CLEAR".

3. DOOR OPENINGS ARE DIMENSIONED TO CENTERLINE OF OPENING. IF NOT DIMENSIONED, THE HINGE SIDE OF DOOR SHALL BE SPACED 4" (INCLUDING THE JAMB) FROM THE ADJACENT WALL.

4. ALL INTERIOR PARTITIONS TO BE TYPE 'A41' U.N.O.

1 LEVEL 2 PLAN
3/32" = 1'-0"

Perkins&Will

225 Franklin Street, Suite 1100
Boston, MA 02110
t 617.478.0300
www.perkinswill.com

CONSULTANTS

CIVIL ENGINEER
Woodard & Curran
41 Hutchins Dr
Portland, ME 04102
t 207.774.2112

STRUCTURAL + MEP ENGINEER
Rist-Frost-Shumway Engineering
50 Milk Street, 16th Floor
Boston, MA 02109
t 617.494.1464

OWNER'S CONSULTANT

LANDSCAPE ARCHITECT
Michael Boucher
457 US Route 1 Suite 2
Freeport, Maine
t 207.865.1080

PROJECT

BUILDING 1A
58 FORE ST
PORTLAND, ME 04101

FORESIDE
254 COMMERCIAL ST
SUITE 118
PORTLAND, ME 04101

KEYPLAN

NOT FOR CONSTRUCTION

ISSUE CHART

MARK	ISSUE	DATE

DESIGN DEVELOPMENT
JULY 26, 2019

Job Number	157087.000
Drawn	Author
Checked	Checker
Approved	Approver

TITLE

LEVEL 2 PLAN

SHEET NUMBER

A10-02

Copyright © 2019 Perkins+Will

10/29/2019 5:31:30 PM C:\Temp\58 Fore St_Building 1A_v2019_Stamjakoulis4.rvt

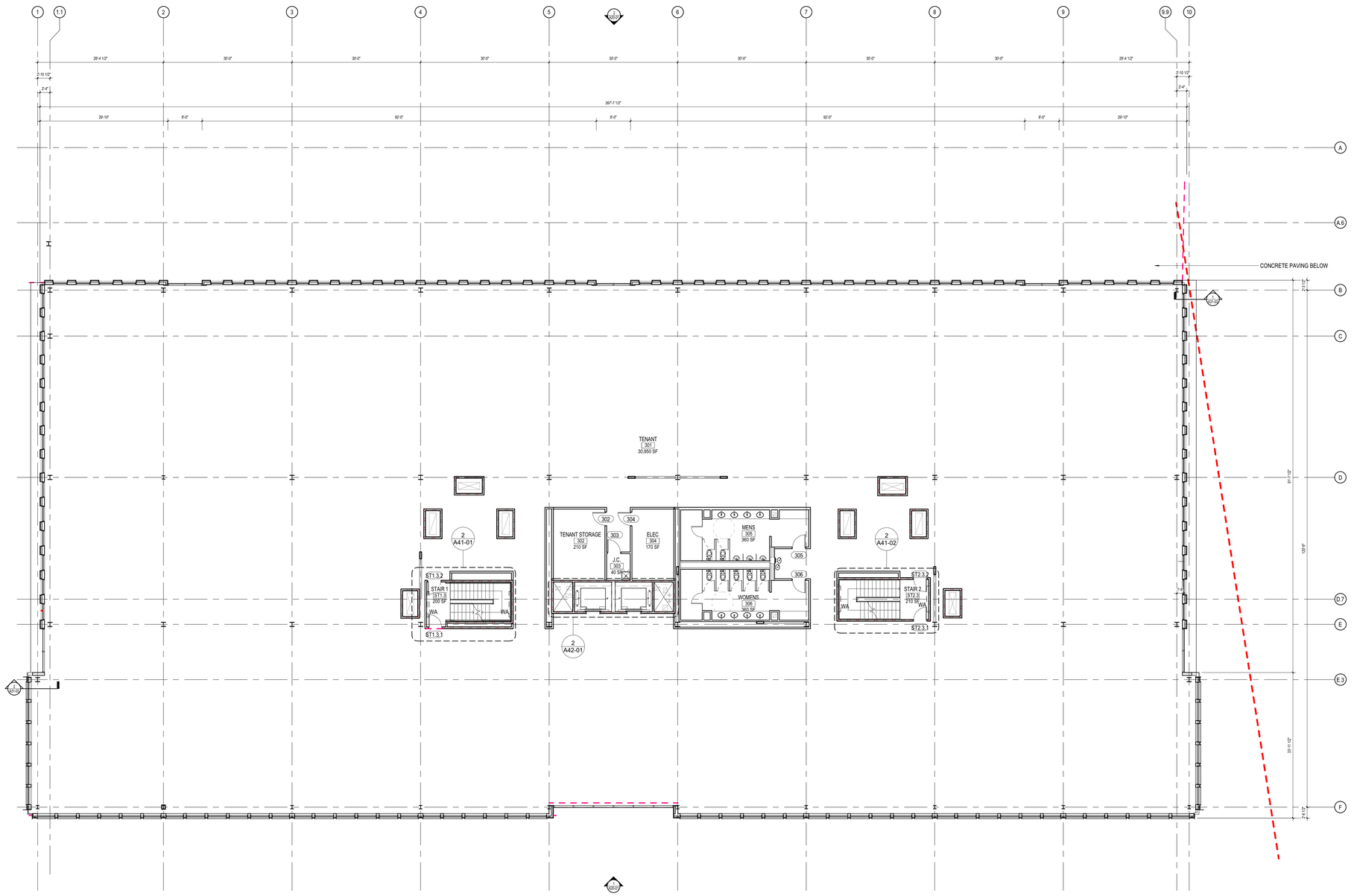
1
1.1
2
3
4
5
6
7
8
9
9.8
10
29'-4 1/2"
30'-0"
2'-10 1/2"
2'-4"
267'-7 1/2"
28'-10"
8'-0"
92'-0"
A
A.6
B
C
D
D.7
E
E.3
F
CONCRETE PAVING BELOW
TENANT
301
30,950 SF
TENANT STORAGE
302
210 SF
302
303
304
ELEC
304
170 SF
J.C.
305
40 SF
MENS
305
360 SF
305
306
WOMENS
306
360 SF
2
A41-01
2
A42-01
2
A41-02
ST1.3.2
STAIR 1
ST1.3
200 SF
WA
ST1.3.1
ST2.3.2
STAIR 2
ST2.3
210 SF
ST2.3.1
2'-3 1/2"
4'-0"
4'-0"
4'-0

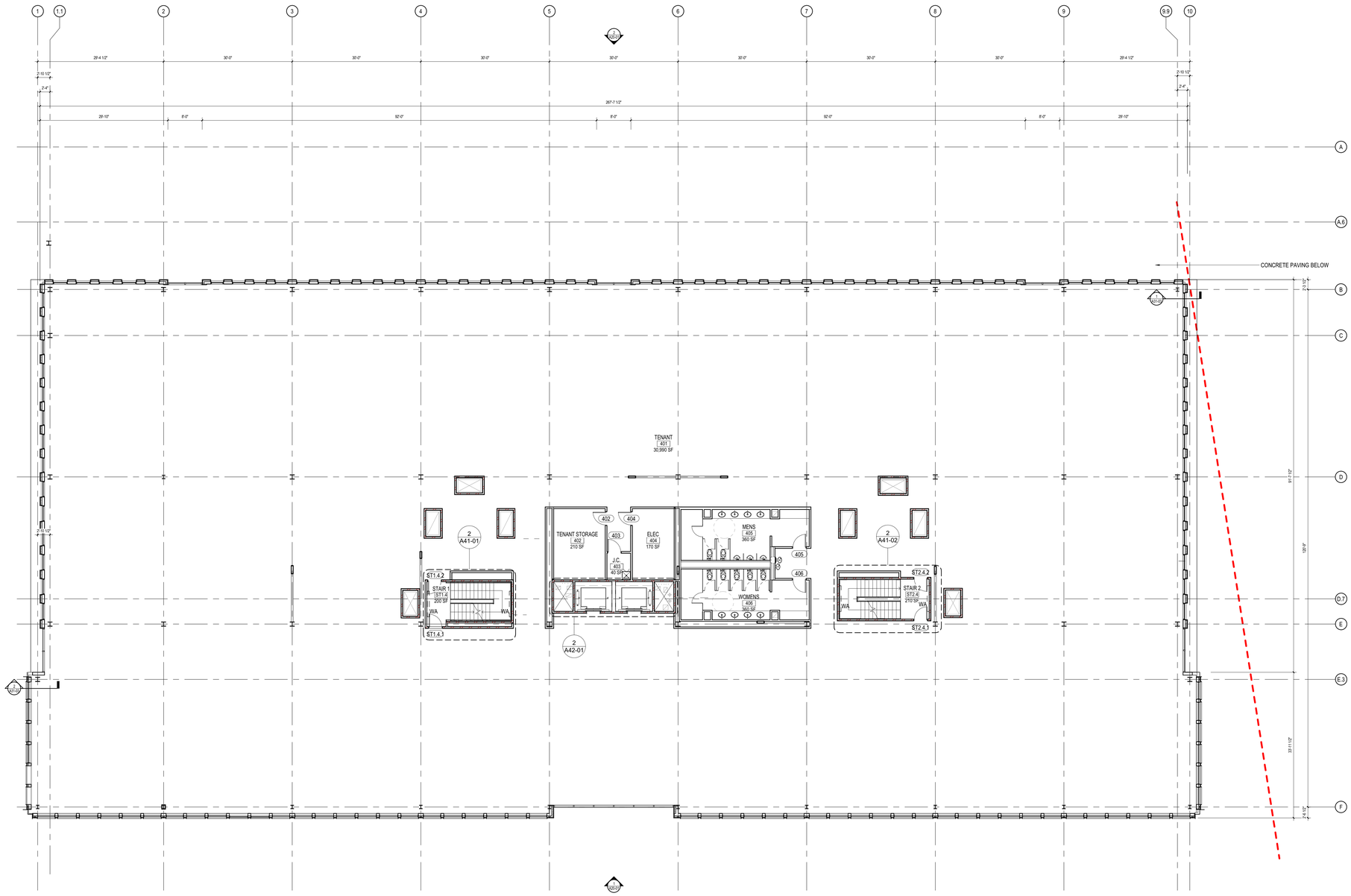

PARTITION & DOOR NOTES

1. PARTITIONS LOCATED BY DIMENSION STRING ARE DIMENSIONED TO THE UNFINISHED FACE OF THE WALL UNLESS NOTED OTHERWISE.

2. PARTITIONS NOT DIMENSIONED ARE GENERALLY LOCATED BY ONE OF THE FOLLOWING CRITERIA:

2.1 CENTERLINE - CENTER OF PARTITION ALIGNS WITH THE CENTER OF GRIDLINE OR OBJECT CENTERLINE (SUCH AS A COLUMN OR WINDOW MULLION).
CENTER THE OVERALL PARTITION WIDTH, RATHER THAN STUD WIDTH ON THE RELATED CENTERLINE.

2.2 ALIGN - LOCATE PARTITION FLUSH WITH FACE OF ANOTHER PARTITION OR ANOTHER SURFACE AS INDICATED.

2.3 SPECIFICALLY MAINTAIN DIMENSIONS NOTED AS "MINIMUM" OR "CLEAR".

3. DOOR OPENINGS ARE DIMENSIONED TO CENTERLINE OF OPENING. IF NOT DIMENSIONED, THE HINGE SIDE OF DOOR SHALL BE SPACED 4" (INCLUDING THE JAMB) FROM THE ADJACENT WALL.

4. ALL INTERIOR PARTITIONS TO BE TYPE 'A41' U.N.O.

1 LEVEL 4 PLAN

3/32" = 1'-0"

Perkins&Will

225 Franklin Street, Suite 1100
Boston, MA 02110
t 617.478.0300
www.perkinswill.com

CONSULTANTS

CIVIL ENGINEER
Woodard & Curran
41 Hutchins Dr
Portland, ME 04102
t 207.774.2112

STRUCTURAL + MEP ENGINEER
Rist-Frost-Shumway Engineering
50 Milk Street, 16th Floor
Boston, MA 02109
t 617.494.1464

OWNER'S CONSULTANT

LANDSCAPE ARCHITECT
Michael Boucher
457 US Route 1 Suite 2
Freeport, Maine
t 207.865.1080

PROJECT

BUILDING 1A
58 FORE ST
PORTLAND, ME 04101

FORESIDE
254 COMMERCIAL ST
SUITE 118
PORTLAND, ME 04101

KEYPLAN

NOT FOR CONSTRUCTION

ISSUE CHART

MARK	ISSUE	DATE

DESIGN DEVELOPMENT
JULY 26, 2019

Job Number	157087.000
Drawn	Author
Checked	Checker
Approved	Approver

TITLE

LEVEL 4 PLAN

SHEET NUMBER

A10-04

Copyright © 2019 Perkins+Will

7/26/2019 6:14:07 PM C:\Users\Siampakoulis\Documents\58 Fore St_Building 1A_v2019_Siampakoulis.rvt

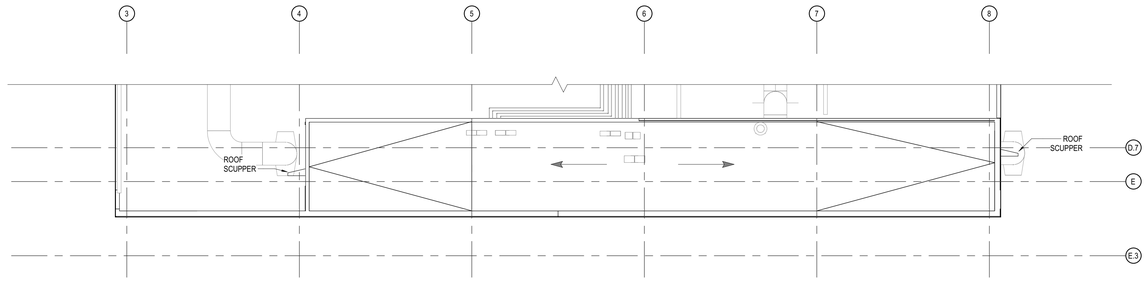

2 HIGH ROOF PLAN
3/32" = 1'-0"

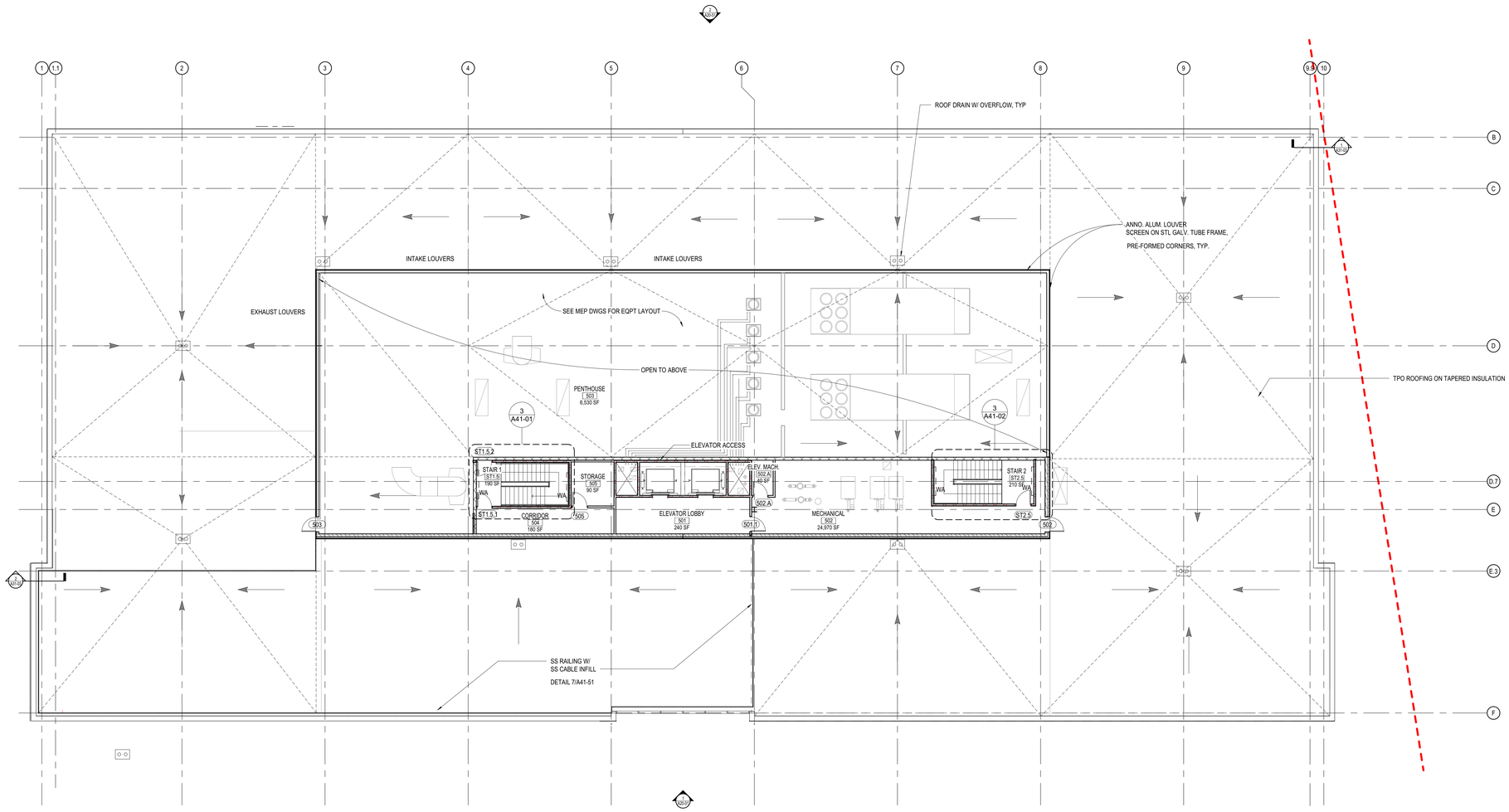

PARTITION & DOOR NOTES

1. PARTITIONS LOCATED BY DIMENSION STRING ARE DIMENSIONED TO THE UNFINISHED FACE OF THE WALL UNLESS NOTED OTHERWISE.

2. PARTITIONS NOT DIMENSIONED ARE GENERALLY LOCATED BY ONE OF THE FOLLOWING CRITERIA:

2.1 CENTERLINE - CENTER OF PARTITION ALIGNS WITH THE CENTER OF GRIDLINE OR OBJECT CENTERLINE (SUCH AS A COLUMN OR WINDOW MULLION).
CENTER THE OVERALL PARTITION WIDTH, RATHER THAN STUD WIDTH ON THE RELATED CENTERLINE.

2.2 ALIGN - LOCATE PARTITION FLUSH WITH FACE OF ANOTHER PARTITION OR ANOTHER SURFACE AS INDICATED.

2.3 SPECIFICALLY MAINTAIN DIMENSIONS NOTED AS "MINIMUM" OR "CLEAR".

3. DOOR OPENINGS ARE DIMENSIONED TO CENTERLINE OF OPENING. IF NOT DIMENSIONED, THE HINGE SIDE OF DOOR SHALL BE SPACED 4" (INCLUDING THE JAMB) FROM THE ADJACENT WALL.

4. ALL INTERIOR PARTITIONS TO BE TYPE 'A41' U.N.O.

1 PENTHOUSE & ROOF PLAN
3/32" = 1'-0"

Perkins&Will

225 Franklin Street, Suite 1100
Boston, MA 02110
t 617.478.0300
www.perkinswill.com

CONSULTANTS

CIVIL ENGINEER
Woodard & Curran
41 Hutchins Dr
Portland, ME 04102
t 207.774.2112

STRUCTURAL + MEP ENGINEER
Rist-Frost-Shumway Engineering
50 Milk Street, 16th Floor
Boston, MA 02109
t 617.494.1464

OWNER'S CONSULTANT

LANDSCAPE ARCHITECT
Michael Boucher
457 US Route 1 Suite 2
Freeport, Maine
t 207.865.1080

PROJECT

BUILDING 1A
58 FORE ST
PORTLAND, ME 04101

FORESIDE
254 COMMERCIAL ST
SUITE 118
PORTLAND, ME 04101

KEYPLAN

NOT FOR CONSTRUCTION

ISSUE CHART

MARK	ISSUE	DATE

DESIGN DEVELOPMENT
JULY 26, 2019

Job Number	157087.000
Drawn	Author
Checked	Checker
Approved	Approver

TITLE

PENTHOUSE & HIGH ROOF PLAN

SHEET NUMBER

A10-05

Copyright © 2019 Perkins+Will

7/26/2019 6:14:11 PM C:\Users\Siampakoulis\Documents\58 Fore St_Building 1A_v2019_SiampakoulisA.rvt

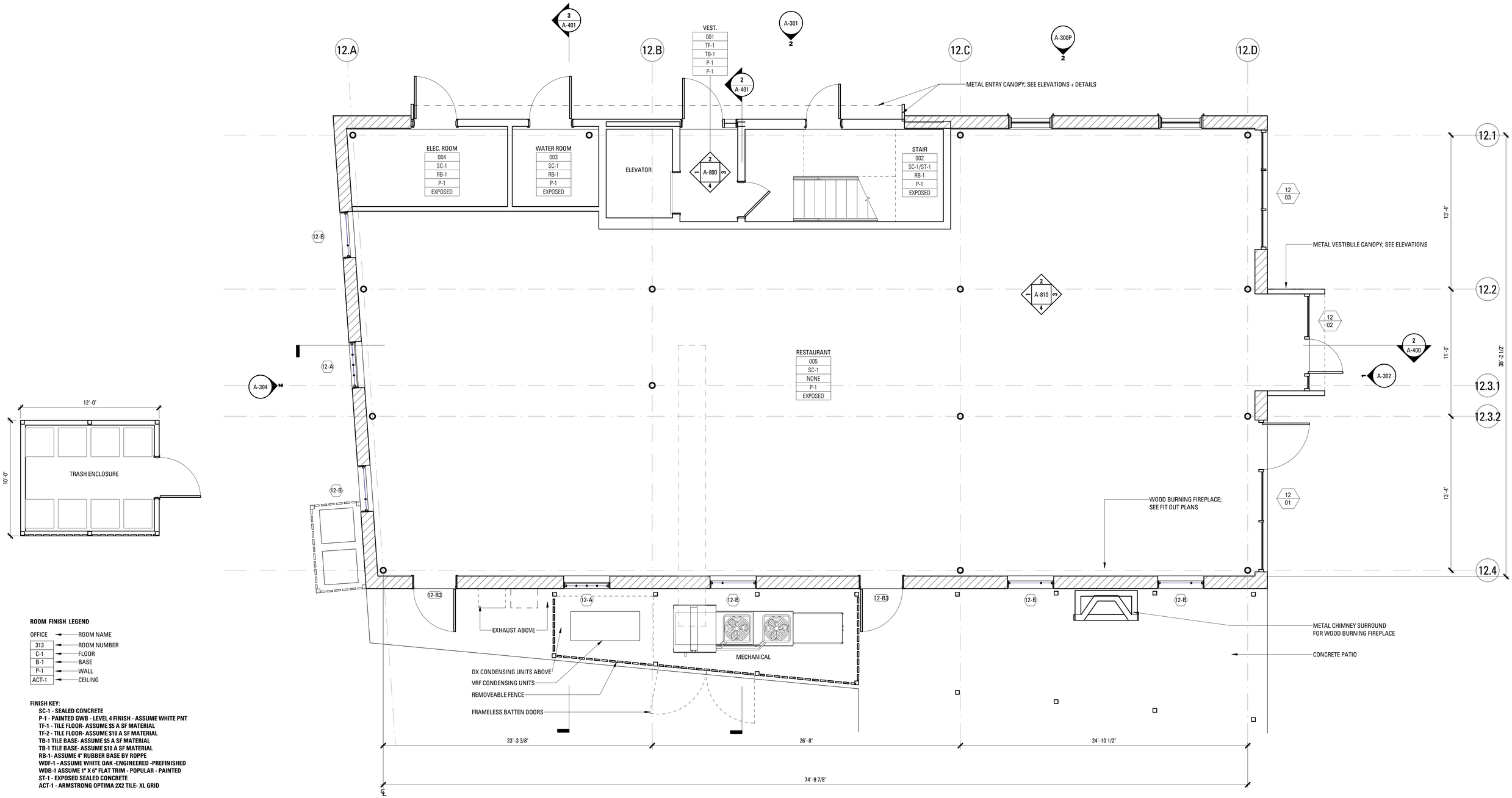

ROOM FINISH LEGEND

OFFICE	ROOM NAME
313	ROOM NUMBER
C-1	FLOOR
B-1	BASE
P-1	WALL
ACT-1	CEILING

FINISH KEY:

- **SC-1 - SEALED CONCRETE**
- **P-1 - PAINTED GWB - LEVEL 4 FINISH - ASSUME WHITE PNT**
- **TF-1 - TILE FLOOR- ASSUME $5 A SF MATERIAL**
- **TF-2 - TILE FLOOR- ASSUME $10 A SF MATERIAL**
- **TB-1 TILE BASE- ASSUME $5 A SF MATERIAL**
- **TB-1 TILE BASE- ASSUME $10 A SF MATERIAL**
- **RB-1- ASSUME 4" RUBBER BASE BY ROPPE**
- **WDF-1 - ASSUME WHITE OAK -ENGINEERED -PREFINISHED**
- **WDB-1 ASSUME 1" X 6" FLAT TRIM - POPULAR - PAINTED**
- **ST-1 - EXPOSED SEALED CONCRETE**
- **ACT-1 - ARMSTRONG OPTIMA 2X2 TILE- XL GRID**

FUTURE NOTE:

REFER TO REFLECTED CEILING PLANS FOR EXTENT OF GWB SOFFITS, OR SPECIAL CEILING MATERIAL LOCATIONS

1 BUILDING 12 - GROUND FLOOR PLAN
SCALE: 1/4" = 1'-0"

Bruner/Cott
ARCHITECTS
225 Friend St., Suite 701
Boston, MA 02114
617.492.8400
www.brunercott.com

Rev.	Date	Remarks

PORTLAND FORESIDE - BUILDING 12

Date	OCTOBER 25, 2019
Scale	As indicated
Project Number	19.007
Drawn By	KPB

BUILDING 12 - GROUND FLOOR PLAN

A-101

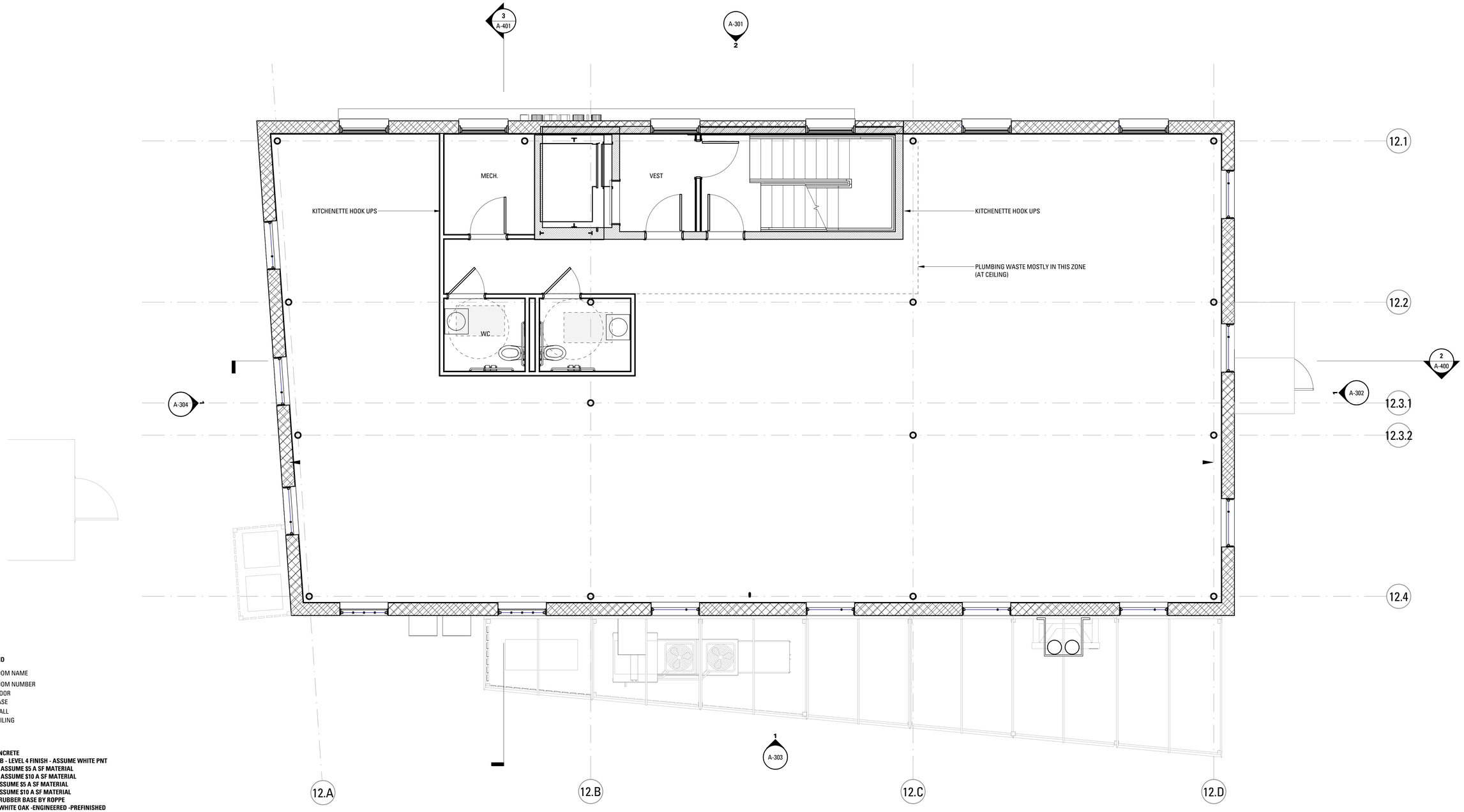

ROOM FINISH LEGEND

OFFICE	ROOM NAME
313	ROOM NUMBER
C-1	FLOOR
B-1	BASE
P-1	WALL
ACT-1	CEILING

FINISH KEY:

- SC-1 - SEALED CONCRETE
- P-1 - PAINTED GWB - LEVEL 4 FINISH - ASSUME WHITE PNT
- TF-1 - TILE FLOOR- ASSUME $5 A SF MATERIAL
- TF-2 - TILE FLOOR- ASSUME $10 A SF MATERIAL
- TB-1 TILE BASE- ASSUME $5 A SF MATERIAL
- TB-1 TILE BASE- ASSUME $10 A SF MATERIAL
- RB-1- ASSUME 4" RUBBER BASE BY ROPPE
- WDF-1 - ASSUME WHITE OAK -ENGINEERED -PREFINISHED
- WDB-1 ASSUME 1" X 6" FLAT TRIM - POPULAR - PAINTED
- ST-1 - EXPOSED SEALED CONCRETE
- ACT-1 - ARMSTRONG OPTIMA 2X2 TILE- XL GRID

FUTURE NOTE:

REFER TO REFLECTED CEILING PLANS
FOR EXTENT OF GWB SOFFITS, OR
SPECIAL CEILING MATERIAL LOCATIONS

Bruner/Cott
ARCHITECTS
225 Friend St., Suite 701
Boston, MA 02114
617.492.8400
www.brunercott.com

Rev.	Date	Remarks

PORTLAND FORESIDE - BUILDING 12

Date	OCTOBER 25, 2019
Scale	As indicated
Project Number	19.007
Drawn By	KPB

BUILDING 12- SECOND FLOOR PLAN

A-102

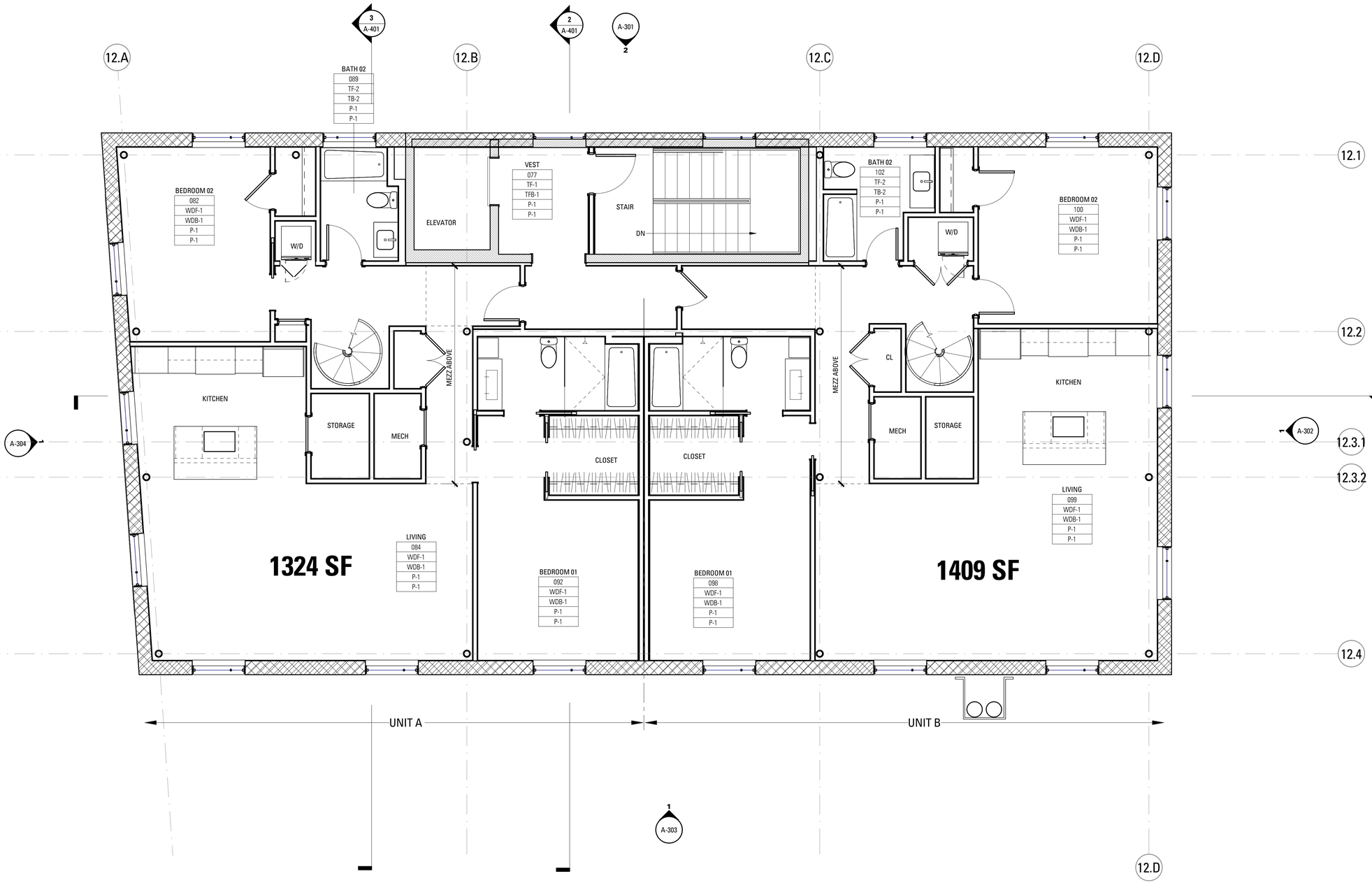

ROOM FINISH LEGEND

OFFICE	ROOM NAME
313	ROOM NUMBER
C-1	FLOOR
B-1	BASE
P-1	WALL
ACT-1	CEILING

FINISH KEY:

- **SC-1 - SEALED CONCRETE**
- **P-1 - PAINTED GWB - LEVEL 4 FINISH - ASSUME WHITE PNT**
- **TF-1 - TILE FLOOR- ASSUME $5 A SF MATERIAL**
- **TF-2 - TILE FLOOR- ASSUME $10 A SF MATERIAL**
- **TB-1 TILE BASE- ASSUME $5 A SF MATERIAL**
- **TB-1 TILE BASE- ASSUME $10 A SF MATERIAL**
- **RB-1- ASSUME 4" RUBBER BASE BY ROPPE**
- **WDF-1 - ASSUME WHITE OAK -ENGINEERED -PREFINISHED**
- **WDB-1 ASSUME 1" X 6" FLAT TRIM - POPULAR - PAINTED**
- **ST-1 - EXPOSED SEALED CONCRETE**
- **ACT-1 - ARMSTRONG OPTIMA 2X2 TILE- XL GRID**

FUTURE NOTE:

REFER TO REFLECTED CEILING PLANS FOR EXTENT OF GWB SOFFITS, OR SPECIAL CEILING MATERIAL LOCATIONS

Bruner/Cott
ARCHITECTS
225 Friend St., Suite 701
Boston, MA 02114
617.492.8400
www.brunercott.com

Rev.	Date	Remarks

PORTLAND FORESIDE - BUILDING 12

Date	OCTOBER 25, 2019
Scale	As indicated
Project Number	19.007
Drawn By	KPB

BUILDING 12 - THIRD FLOOR PLAN

A-103

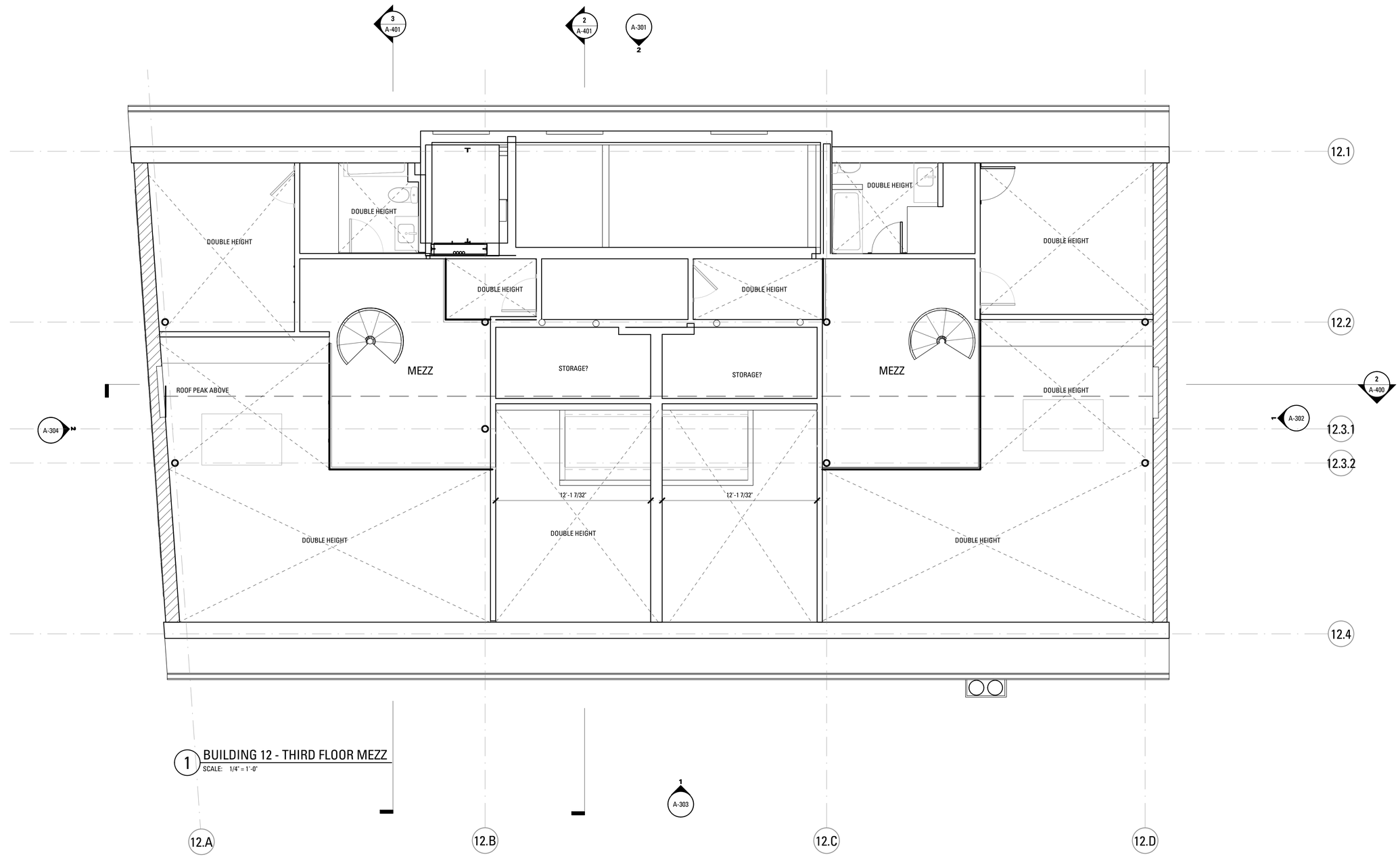

1 BUILDING 12 - THIRD FLOOR MEZZ
SCALE: 1/4" = 1'-0"

Bruner/Cott
ARCHITECTS
225 Friend St., Suite 701
Boston, MA 02114
617.492.8400
www.brunercott.com

Rev.	Date	Remarks

PORTLAND FORESIDE - BUILDING 12

Date	OCTOBER 25, 2019
Scale	1/4" = 1'-0"
Project Number	19.007
Drawn By	KPB

BUILDING 12- 3RD FLOOR MEZZ

A-104

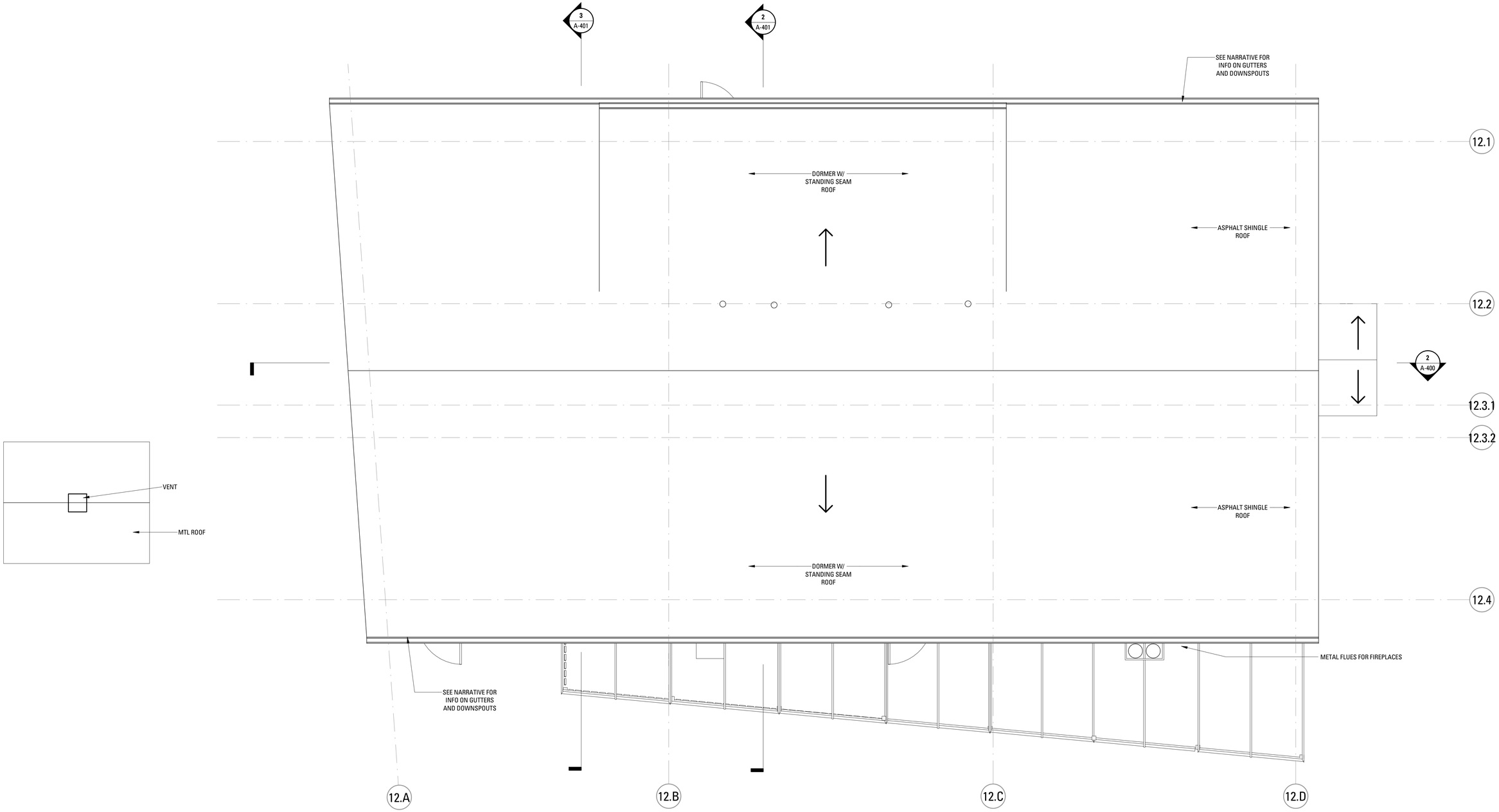

Bruner/Cott
ARCHITECTS
225 Friend St., Suite 701
Boston, MA 02114
617.492.8400
www.brunercott.com

Rev.	Date	Remarks

PORTLAND FORESIDE - BUILDING 12

Date	OCTOBER 25, 2019
Scale	1/4" = 1'-0"
Project Number	19.007
Drawn By	Author

BUILDING 12- ROOF PLAN

A-105

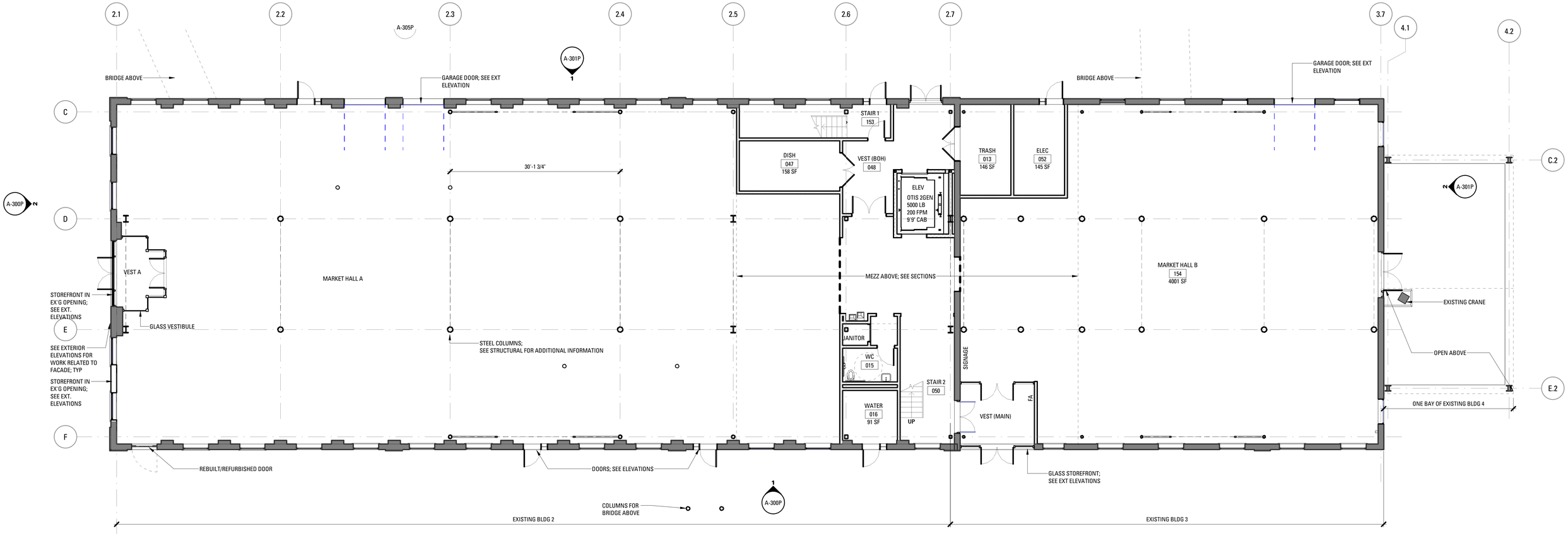

Bruner/Cott
ARCHITECTS
225 Friend St., Suite 701
Boston, MA 02114
617.492.8400
www.brunercott.com

Rev.	Date	Remarks

PORTLAND FORESIDE BLOCK 2

Date	OCTOBER 25, 2019
Scale	1/8" = 1'-0"
Project Number	
Drawn By	Author

BUILDING 2/3- PROPOSED GROUND FLOOR PLAN

A-101P

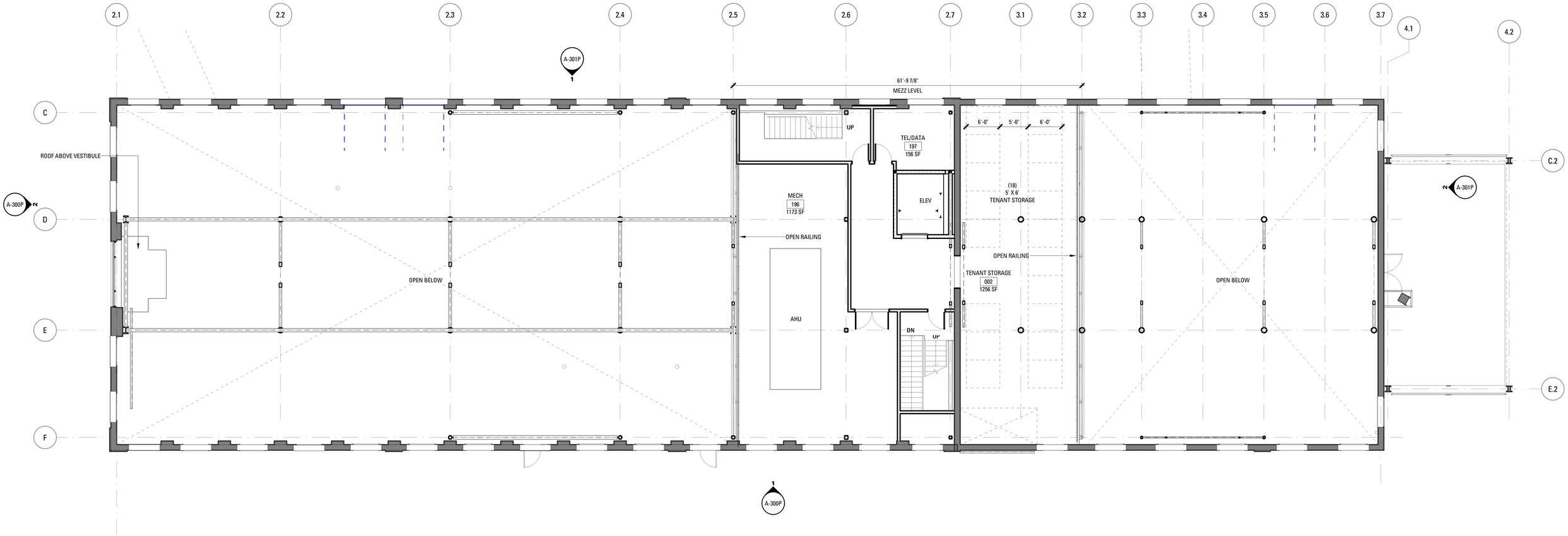

Bruner/Cott
ARCHITECTS
225 Friend St., Suite 701
Boston, MA 02114
617.492.8400
www.brunercott.com

Rev.	Date	Remarks

PORTLAND FORESIDE BLOCK 2

Date	OCTOBER 25, 2019
Scale	1/8" = 1'-0"
Project Number	
Drawn By	Author

BUILDING 2/3 - PROPOSED MEZZ LEVEL

A-102P

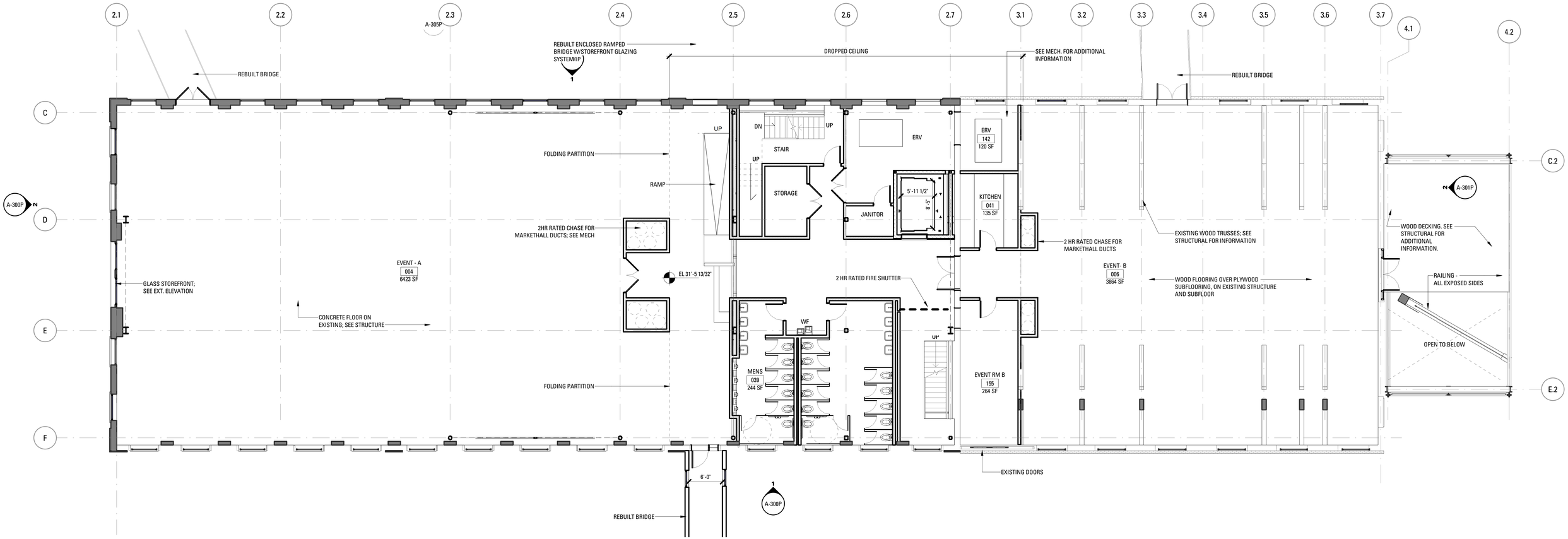

Bruner/Cott
ARCHITECTS
225 Friend St., Suite 701
Boston, MA 02114
617.492.8400
www.brunercott.com

Rev.	Date	Remarks

PORTLAND FORESIDE BLOCK 2

Date	OCTOBER 25, 2019
Scale	1/8" = 1'-0"
Project Number	
Drawn By	Author

BUILDING 2/3 - PROPOSED SECOND FLOOR

A-103P

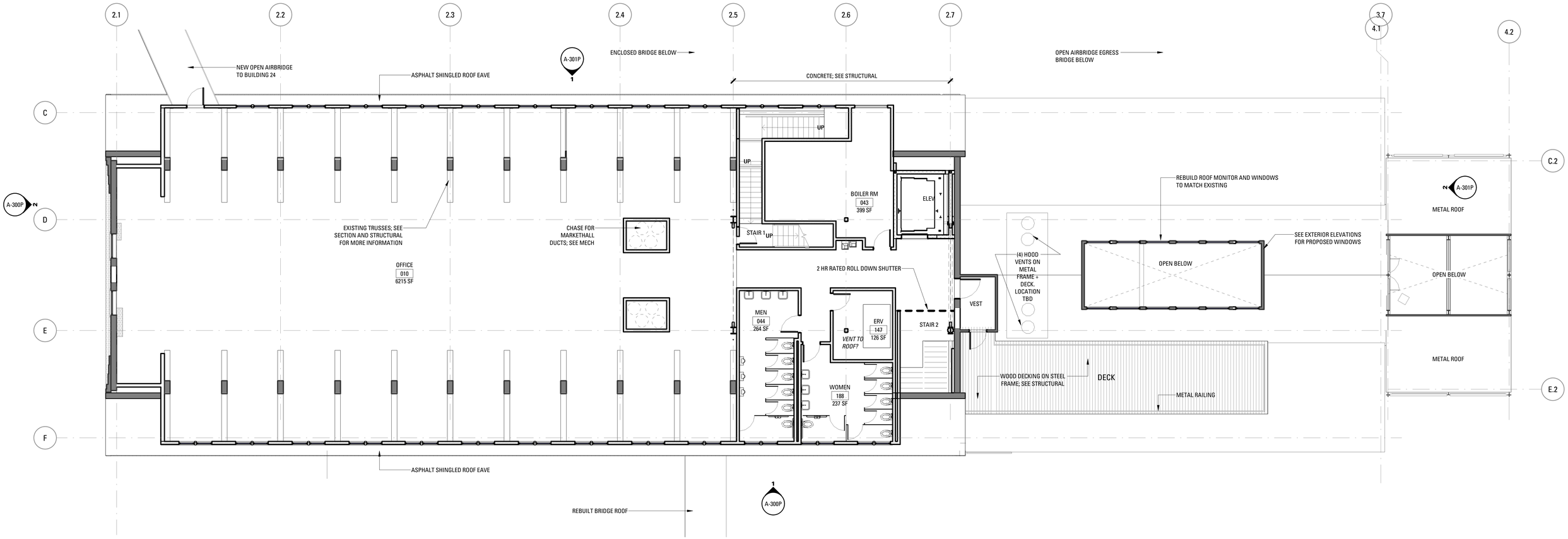

Bruner/Cott
ARCHITECTS
225 Friend St., Suite 701
Boston, MA 02114
617.492.8400
www.brunercott.com

Rev.	Date	Remarks

PORTLAND FORESIDE BLOCK 2

Date	OCTOBER 25, 2019
Scale	1/8" = 1'-0"
Project Number	
Drawn By	Author

BUILDING 2/3 - PROPOSED THIRD FLOOR PLAN

A-104P

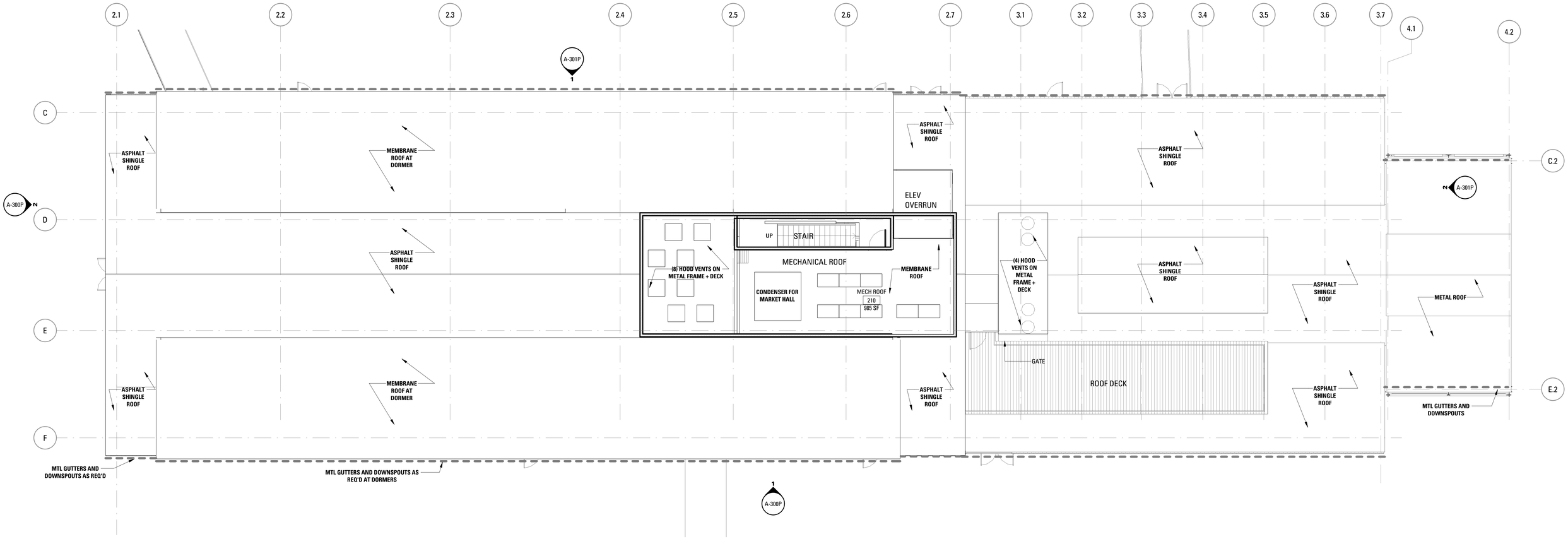

Bruner/Cott
ARCHITECTS
225 Friend St., Suite 701
Boston, MA 02114
617.492.8400
www.brunercott.com

Rev.	Date	Remarks

PORTLAND FORESIDE BLOCK 2

Date	OCTOBER 25, 2019
Scale	1/8" = 1'-0"
Project Number	
Drawn By	Author

BUILDING 2/3 ROOF PLAN

A-105P

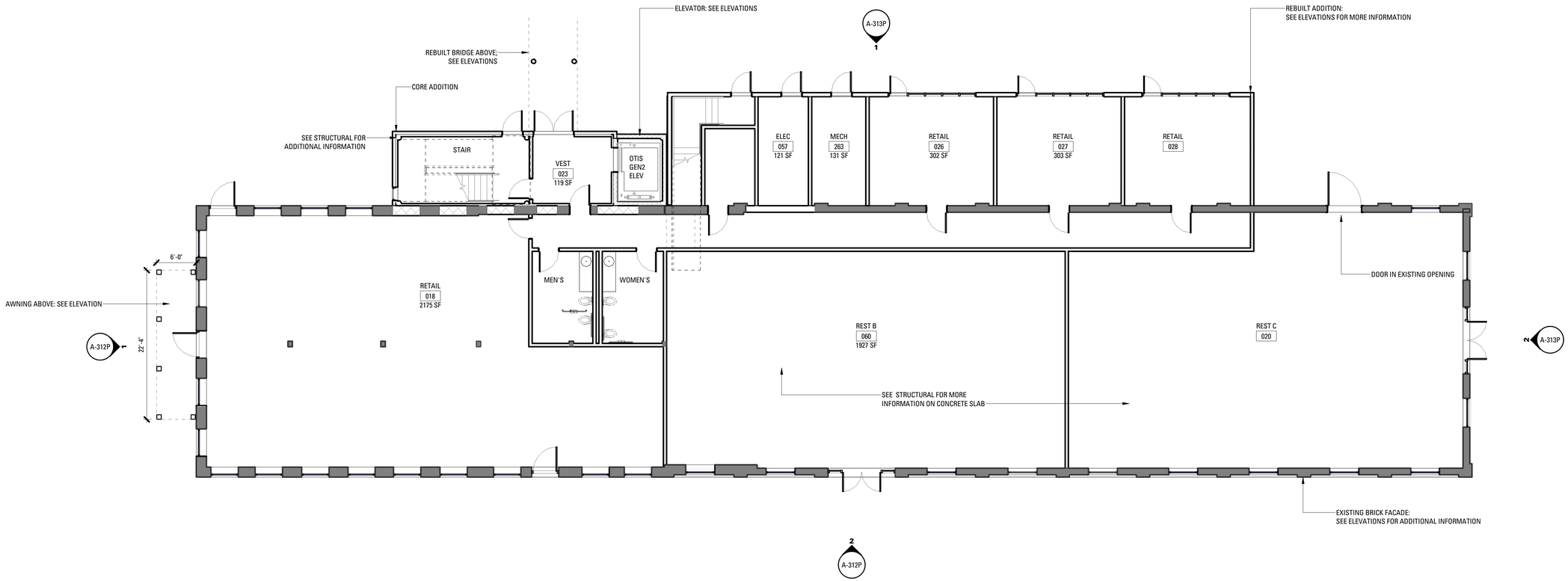

Bruner/Cott
ARCHITECTS

225 Friend St., Suite 701
Boston, MA 02114
617.492.8400
www.brunercott.com

Rev.	Date	Remarks

PORTLAND FORESIDE BLOCK 2

Date	OCTOBER 25, 2019
Scale	1/8" = 1'-0"
Project Number	
Drawn By	Author

BUILDING 6A/6B - PROPOSED GROUND FLOOR

A-110P

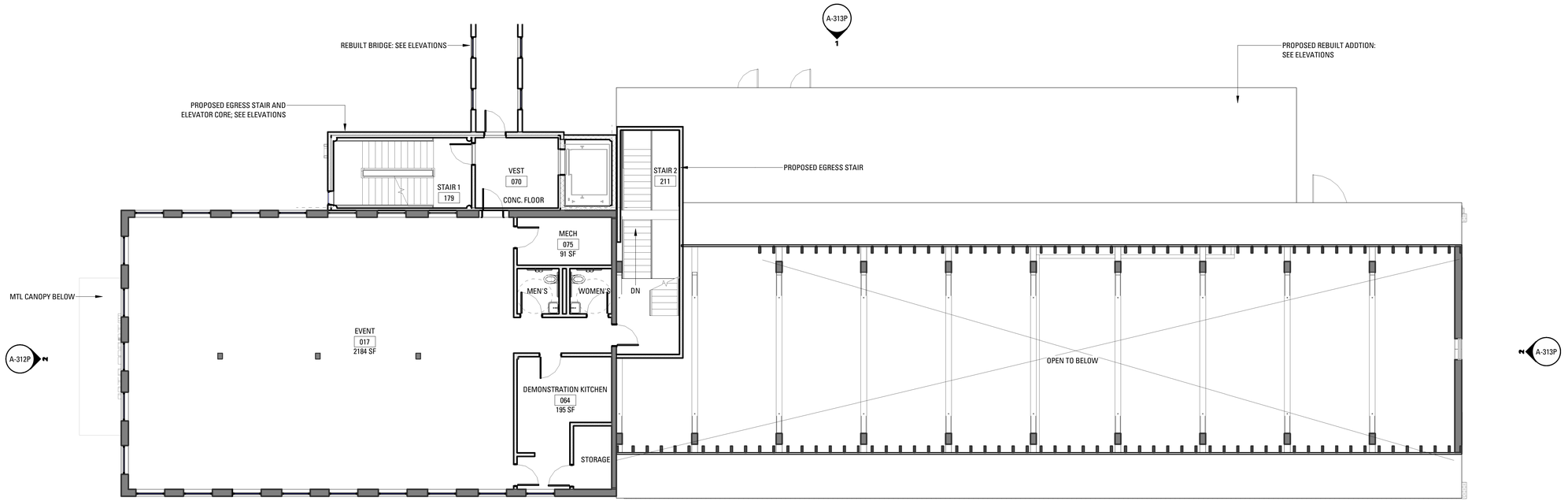

Bruner/Cott
ARCHITECTS

225 Friend St., Suite 701
Boston, MA 02114
617.492.8400
www.brunercott.com

Rev.	Date	Remarks

PORTLAND FORESIDE BLOCK 2

Date	OCTOBER 25, 2019
Scale	1/8" = 1'-0"
Project Number	
Drawn By	Author

BUILDING 6A/6B - PROPOSED SECOND FLOOR

A-111P

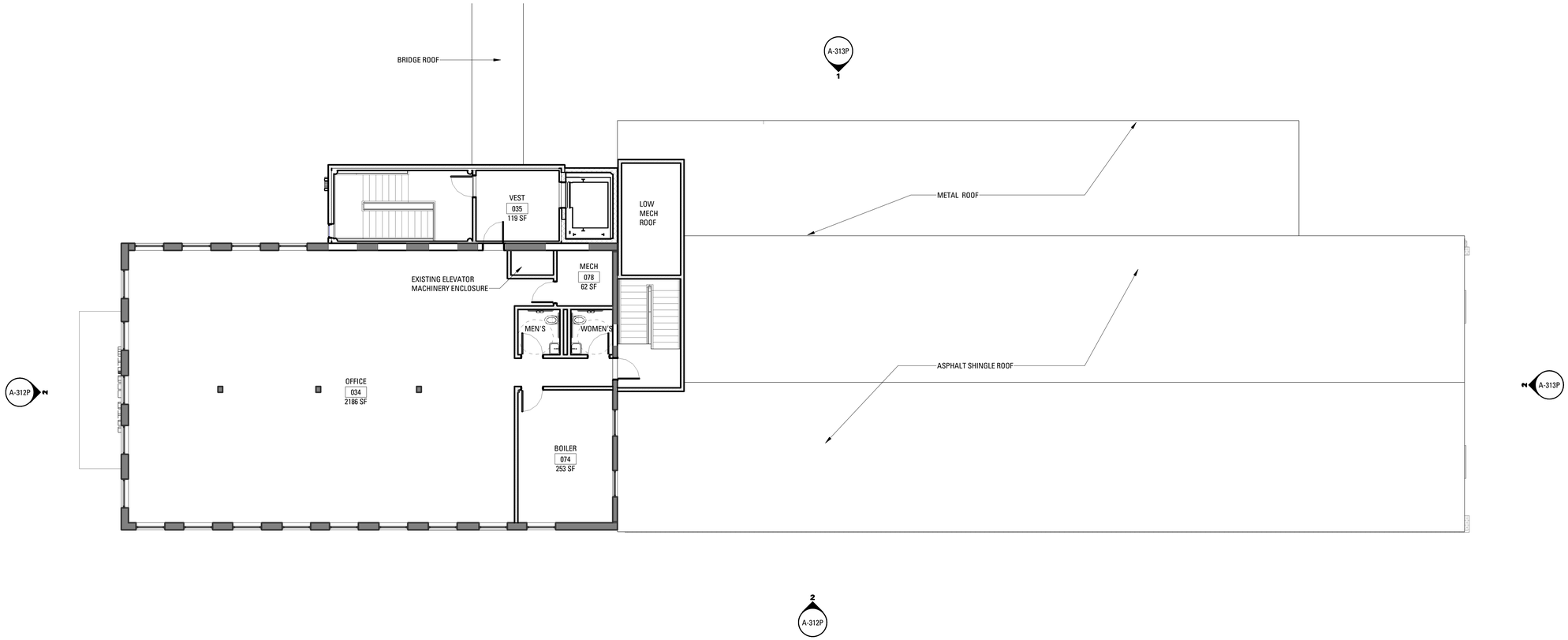

Bruner/Cott
ARCHITECTS
225 Friend St., Suite 701
Boston, MA 02114
617.492.8400
www.brunercott.com

Rev.	Date	Remarks

PORTLAND FORESIDE BLOCK 2

Date	OCTOBER 25, 2019
Scale	1/8" = 1'-0"
Project Number	
Drawn By	Author

BUILDING 6A/6B - PROPOSED THIRD FLOOR

A-112P

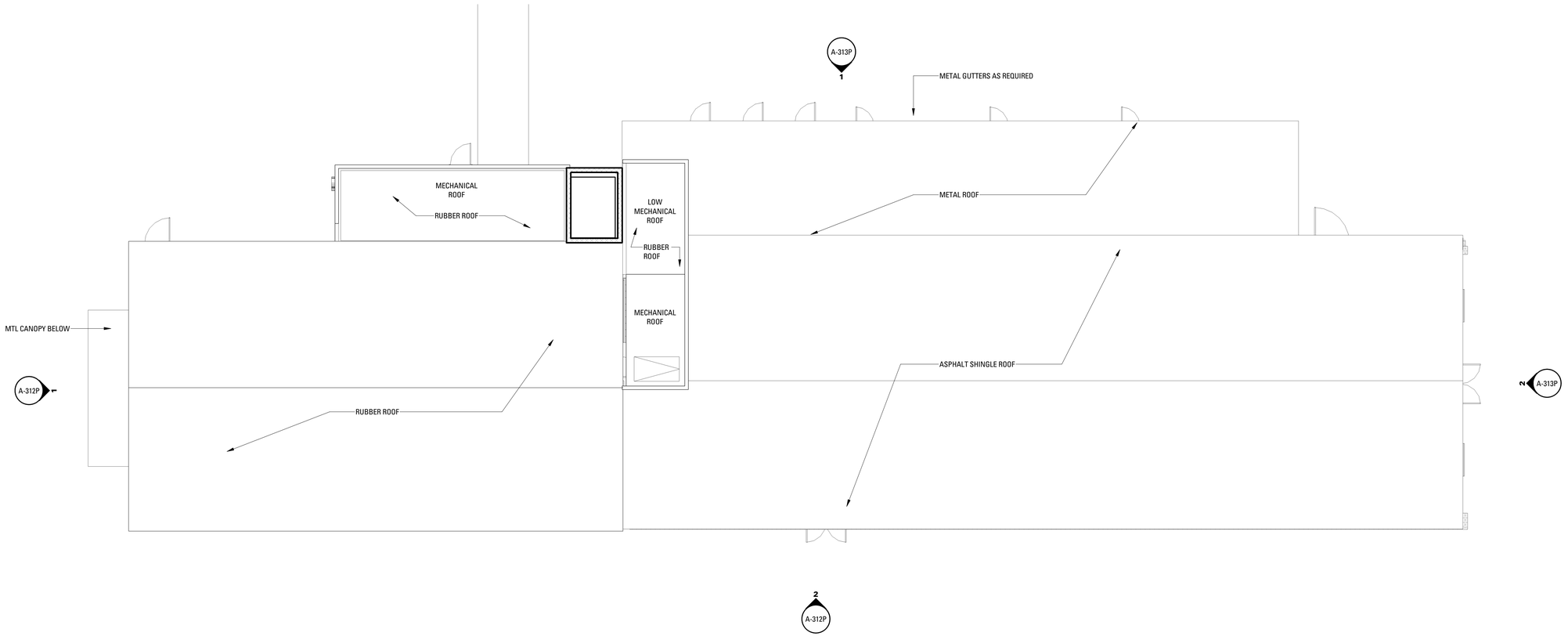

1 BUILDING 6A/6B - PROPOSED ROOF PLAN
SCALE: 1/8" = 1'-0"

Bruner/Cott
ARCHITECTS
225 Friend St., Suite 701
Boston, MA 02114
617.492.8400
www.brunercott.com

Rev.	Date	Remarks

PORTLAND FORESIDE BLOCK 2

Date	OCTOBER 25, 2019
Scale	1/8" = 1'-0"
Project Number	
Drawn By	Author

BUILDING 6A/6B - PROPOSED ROOF PLAN

A-113P

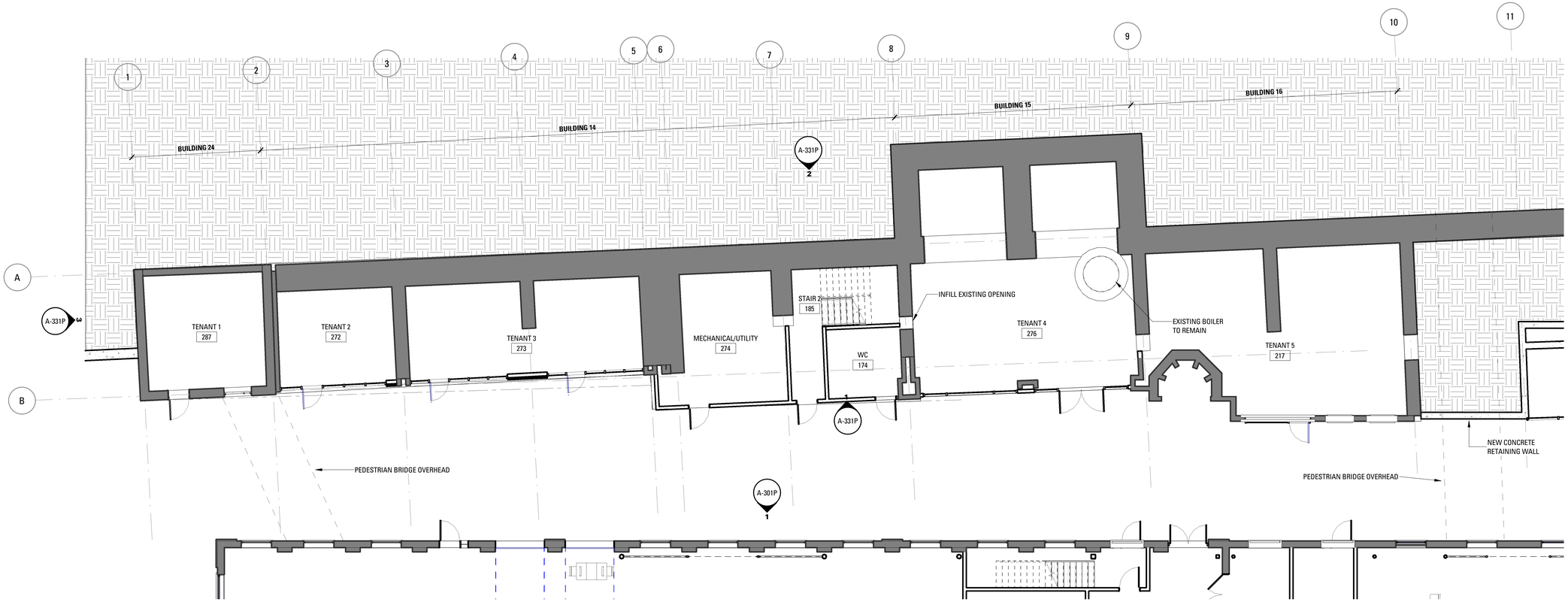

Bruner/Cott
ARCHITECTS
225 Friend St., Suite 701
Boston, MA 02114
617.492.8400
www.brunercott.com

Rev.	Date	Remarks

PORTLAND FORESIDE BLOCK 2

Date	OCTOBER 25, 2019
Scale	1/8" = 1'-0"
Project Number	
Drawn By	Author

EMBANKMENT - PROPOSED GROUND FLOOR

A-131P

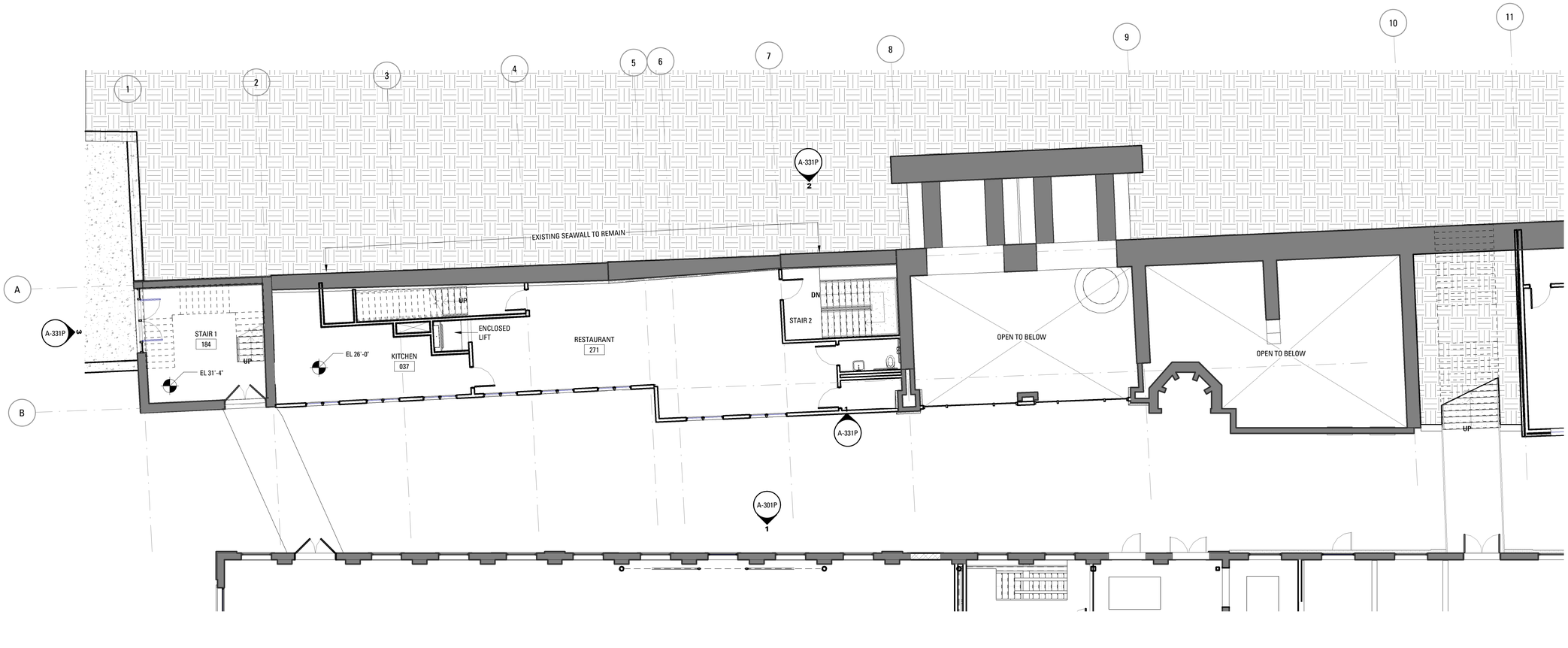

Bruner/Cott
ARCHITECTS
225 Friend St., Suite 701
Boston, MA 02114
617.492.8400
www.brunercott.com

Rev.	Date	Remarks

PORTLAND FORESIDE BLOCK 2

Date	OCTOBER 25, 2019
Scale	1/8" = 1'-0"
Project Number	
Drawn By	Author

EMBANKMENT - PROPOSED SECOND FLOOR

A-132P

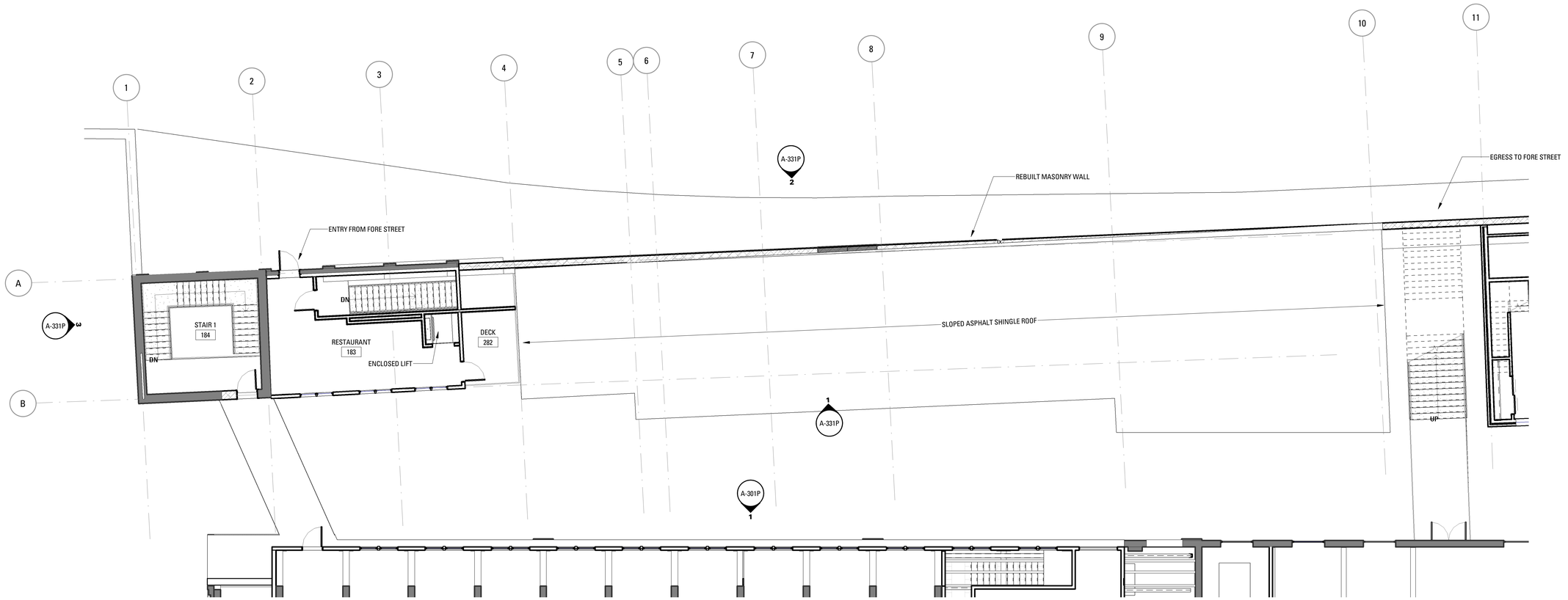

Bruner/Cott
ARCHITECTS
225 Friend St., Suite 701
Boston, MA 02114
617.492.8400
www.brunercott.com

Rev.	Date	Remarks

PORTLAND FORESIDE BLOCK 2

Date	OCTOBER 25, 2019
Scale	1/8" = 1'-0"
Project Number	
Drawn By	Author

EMBANKMENT - PROPOSED THIRD FLOOR

A-133P

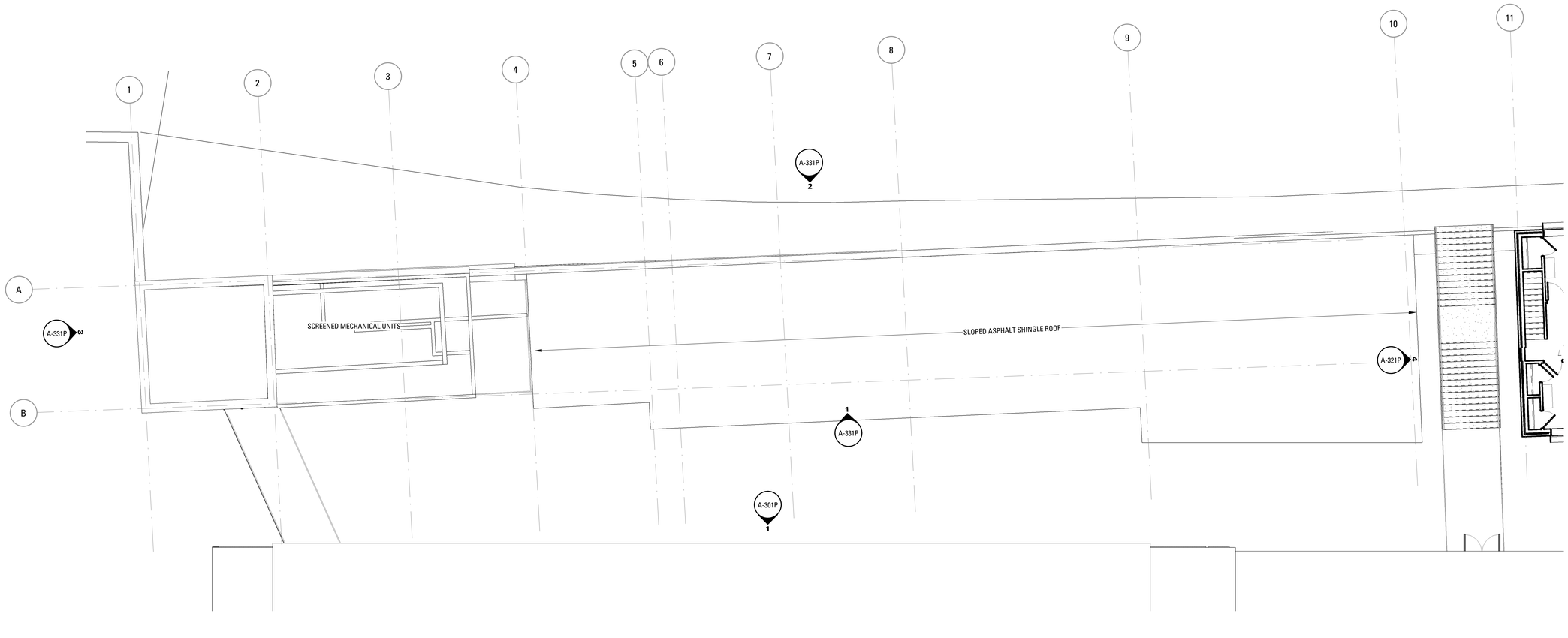

Bruner/Cott
ARCHITECTS
225 Friend St., Suite 701
Boston, MA 02114
617.492.8400
www.brunercott.com

Rev.	Date	Remarks

PORTLAND FORESIDE BLOCK 2

Date	OCTOBER 25, 2019
Scale	1/8" = 1'-0"
Project Number	
Drawn By	Author

EMBANKMENT - PROPOSED ROOF

A-134P

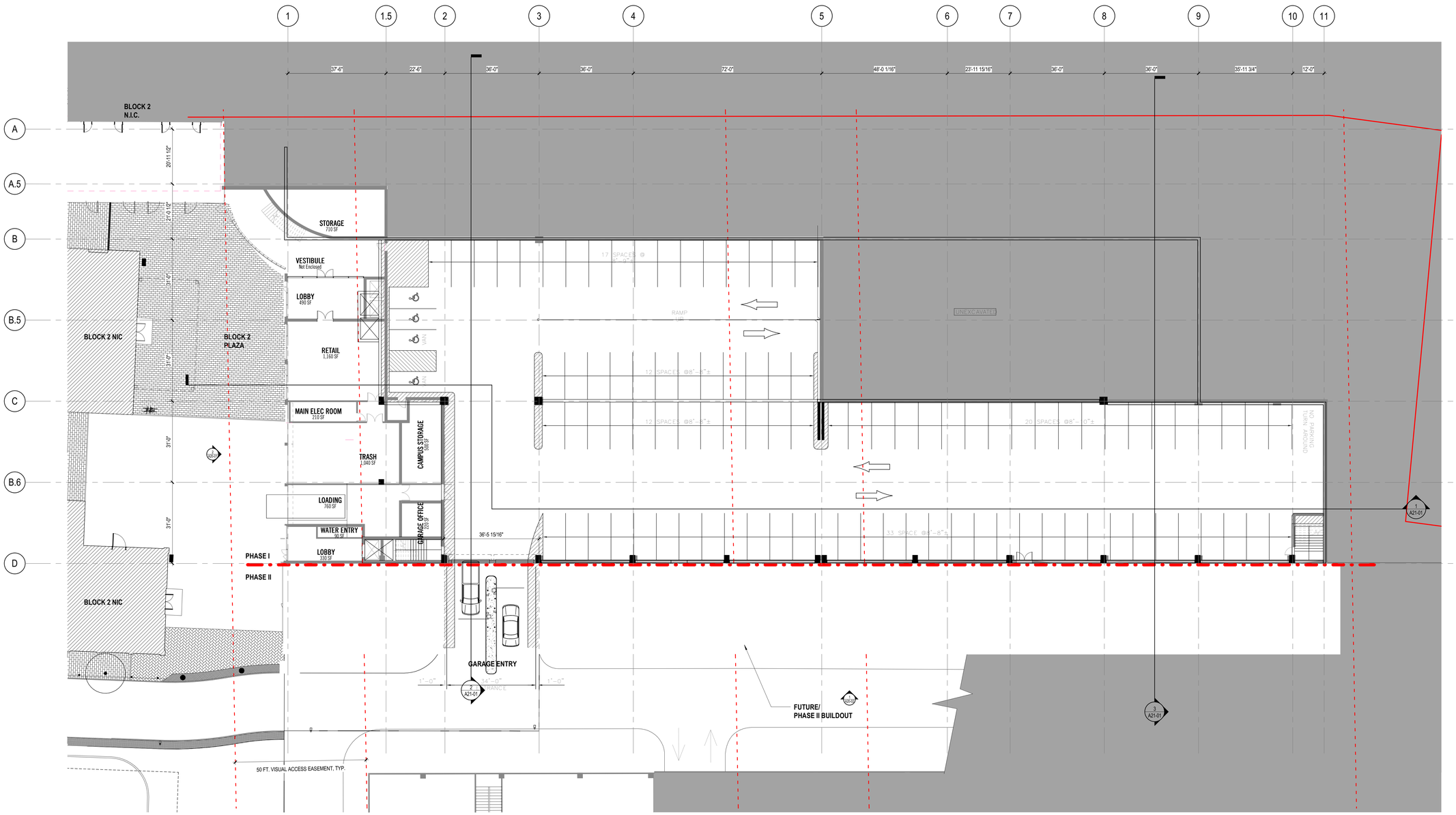

1 LEVEL 01 - ELEV. 16'-0": PHASE TWO
1/16" = 1'-0"

Perkins&Will

225 Franklin Street, Suite 1100
Boston, MA 02110
t 617.478.0300
f 617.478.0321
www.perkinswill.com

CONSULTANTS

STRUCTURAL ENGINEER
Thornton Tomasetti / Becker Structural Engineers
75 YORK ST
PORTLAND, ME 04101
t 207.879.1838
f 207.879.1822

MEP ENGINEER
Rist-Frost-Shumway Engineering
75 YORK ST
PORTLAND, ME 04101
t 207.879.1838

OWNER'S CONSULTANTS

CIVIL ENGINEER
Woodard & Curran
75 YORK ST
PORTLAND, ME 04101
t 207.879.1838

LANDSCAPE ARCHITECT
Michael Boucher Landscape Architecture
75 YORK ST
PORTLAND, ME 04101
t 207.879.1838 f207.879.1822

GENERAL CONSTRACTOR
Consigli
75 YORK ST
PORTLAND, ME 04101
t 207.879.1838

PROJECT

BLOCK FOUR

PORTLAND FORESIDE DEVELOPMENT COMPANY

254 COMMERCIAL ST SUITE 118
PORTLAND, ME 04101

KEYPLAN

ISSUE CHART

MARK	ISSUE	DATE

SCHEMATIC DESIGN
11/08/2019

Job Number	157031.001
Drawn	Author
Checked	Checker
Approved	Approver

TITLE

LEVEL 01 PLAN
ELEV. 16'-0"

SHEET NUMBER

A10-01

Copyright © 2016 Perkins+Will

11/8/2019 1:39:03 PM C:\Temp\58 FORE ST MASTERPLAN_Block Four_v2019_Siampakoulis#A.rvt

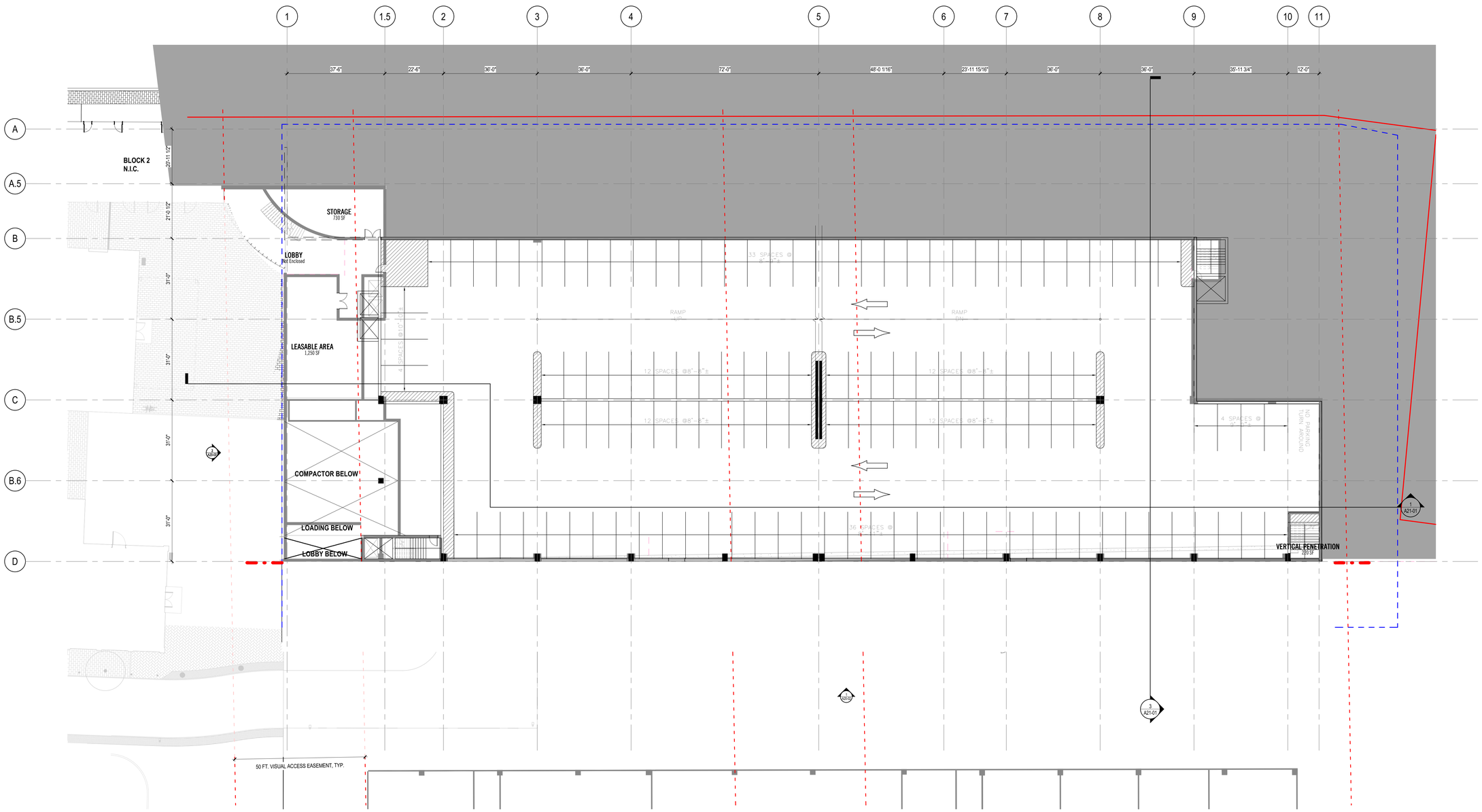

1 LEVEL 02 - ELEV. 27'-6": PHASE TWO
1/16" = 1'-0"

Perkins&Will

225 Franklin Street, Suite 1100
Boston, MA 02110
t 617.478.0300
f 617.478.0321
www.perkinswill.com

CONSULTANTS

STRUCTURAL ENGINEER
Thornton Tomasetti / Becker Structural Engineers
75 YORK ST
PORTLAND, ME 04101
t 207.879.1838
f 207.879.1822

MEP ENGINEER
Rist-Frost-Shumway Engineering
75 YORK ST
PORTLAND, ME 04101
t 207.879.1838

OWNER'S CONSULTANTS

CIVIL ENGINEER
WOODARD &CURRAN
75 YORK ST
PORTLAND, ME 04101
t 207.879.1838

LANDSCAPE ARCHITECT
Michael Boucher Landscape Architecture
75 YORK ST
PORTLAND, ME 04101
t 207.879.1838 f207.879.1822

GENERAL CONSTRACTOR
Consigli
75 YORK ST
PORTLAND, ME 04101
t 207.879.1838

PROJECT

BLOCK FOUR

FORESIDE
PORTLAND, MAINE

PORTLAND FORESIDE DEVELOPMENT COMPANY

254 COMMERCIAL ST SUITE 118
PORTLAND, ME 04101

KEYPLAN

ISSUE CHART

MARK	ISSUE	DATE

SCHEMATIC DESIGN
11/08/2019

Job Number	157031.001
Drawn	Author
Checked	Checker
Approved	Approver

TITLE

LEVEL 02 PLAN ELEV. 27'-6"

SHEET NUMBER

A10-02

Copyright © 2016 Perkins+Will

11/8/2019 1:39:05 PM C:\Temp\58 FORE ST MASTERPLAN_Block Four_v2019_SampakoskiaA.rvt

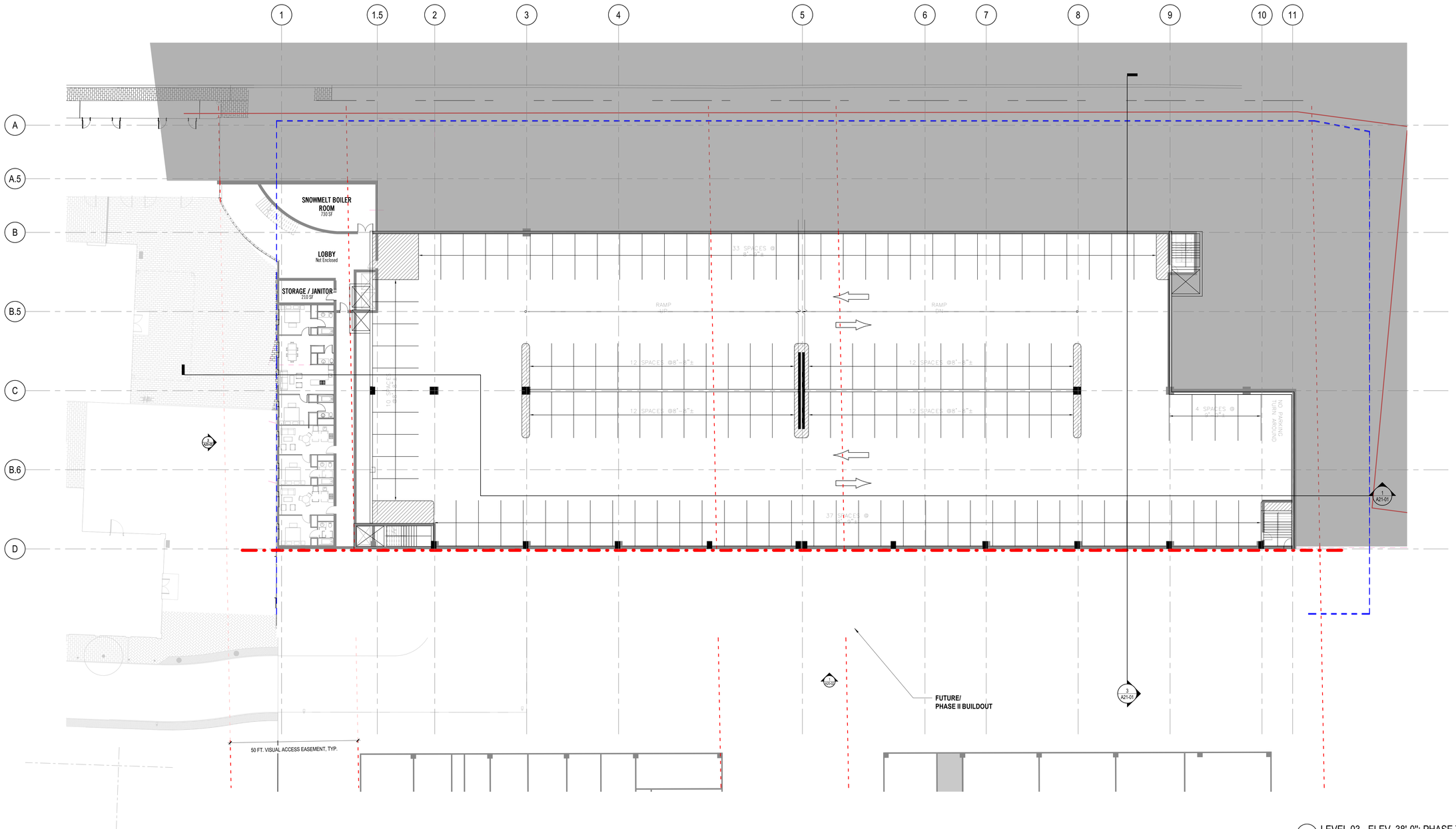

1 LEVEL 03 - ELEV. 38'-0": PHASE TWO
1/16" = 1'-0"

Perkins&Will

225 Franklin Street, Suite 1100
Boston, MA 02110
t 617.478.0300
f 617.478.0321
www.perkinswill.com

CONSULTANTS

STRUCTURAL ENGINEER
Thornton Tomasetti / Becker Structural Engineers
75 YORK ST
PORTLAND, ME 04101
t 207.879.1838
f 207.879.1822

MEP ENGINEER
Rist-Frost-Shumway Engineering
75 YORK ST
PORTLAND, ME 04101
t 207.879.1838

OWNER'S CONSULTANTS

CIVIL ENGINEER
WOODARD &CURRAN
75 YORK ST
PORTLAND, ME 04101
t 207.879.1838

LANDSCAPE ARCHITECT
Michael Boucher Landscape Architecture
75 YORK ST
PORTLAND, ME 04101
t 207.879.1838 f207.879.1822

GENERAL CONSTRACTOR
Consigli
75 YORK ST
PORTLAND, ME 04101
t 207.879.1838

PROJECT

BLOCK FOUR

FORESIDE
PORTLAND, MAINE

PORTLAND FORESIDE DEVELOPMENT COMPANY

254 COMMERCIAL ST SUITE 118
PORTLAND, ME 04101

KEYPLAN

ISSUE CHART

MARK	ISSUE	DATE

SCHEMATIC DESIGN
11/08/2019

Job Number	157031.001
Drawn	Author
Checked	Checker
Approved	Approver

TITLE

LEVEL 03 PLAN ELEV.38'-0"

SHEET NUMBER

A10-03

Copyright © 2016 Perkins+Will

11/8/2019 1:39:13 PM C:\Temp\58 FORE ST MASTERPLAN_Block Four_v2019_Sampakoudas4.rvt

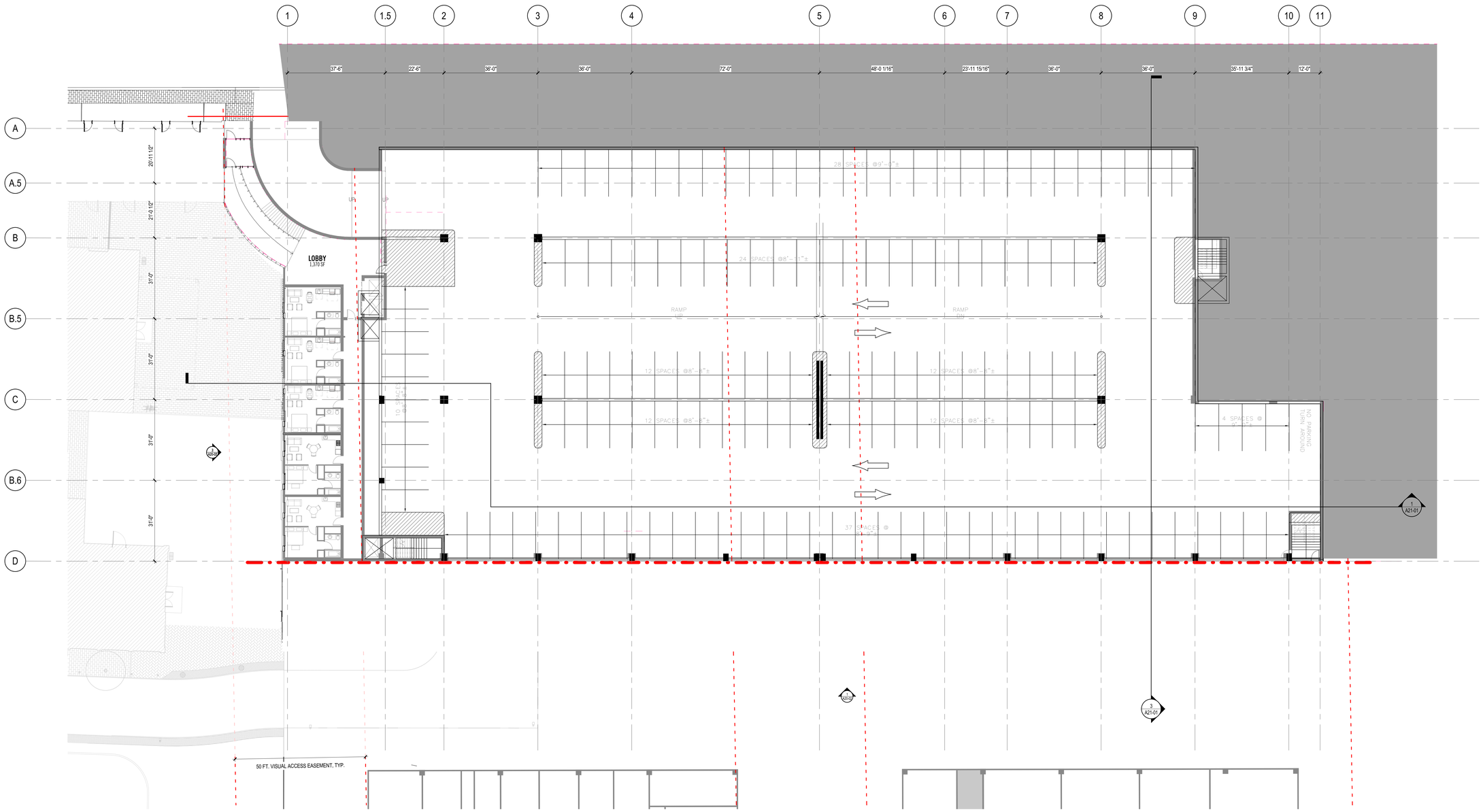

1 LEVEL 04 - ELEV. 48'-6": PHASE TWO
1/16" = 1'-0"

Perkins&Will

225 Franklin Street, Suite 1100
Boston, MA 02110
t 617.478.0300
f 617.478.0321
www.perkinswill.com

CONSULTANTS

STRUCTURAL ENGINEER
Thornton Tomasetti / Becker Structural Engineers
75 YORK ST
PORTLAND, ME 04101
t 207.879.1838
f 207.879.1822

MEP ENGINEER
Rist-Frost-Shumway Engineering
75 YORK ST
PORTLAND, ME 04101
t 207.879.1838

OWNER'S CONSULTANTS

CIVIL ENGINEER
Woodard & Curran
75 YORK ST
PORTLAND, ME 04101
t 207.879.1838

LANDSCAPE ARCHITECT
Michael Boucher Landscape Architecture
75 YORK ST
PORTLAND, ME 04101
t 207.879.1838 f207.879.1822

GENERAL CONSTRACTOR
Consigli
75 YORK ST
PORTLAND, ME 04101
t 207.879.1838

PROJECT

BLOCK FOUR

FORESIDE
PORTLAND, MAINE

PORTLAND FORESIDE DEVELOPMENT COMPANY

254 COMMERCIAL ST SUITE 118
PORTLAND, ME 04101

KEYPLAN

ISSUE CHART

MARK	ISSUE	DATE

SCHEMATIC DESIGN
11/08/2019

Job Number	157031.001
Drawn	Author
Checked	Checker
Approved	Approver

TITLE

LEVEL 04 PLAN ELEV. 48'-6"

SHEET NUMBER

A10-04

Copyright © 2016 Perkins+Will

11/8/2019 1:39:25 PM C:\Temp\58 FORE ST MASTERPLAN_Block Four_v2019_SampakoskiaA.rvt

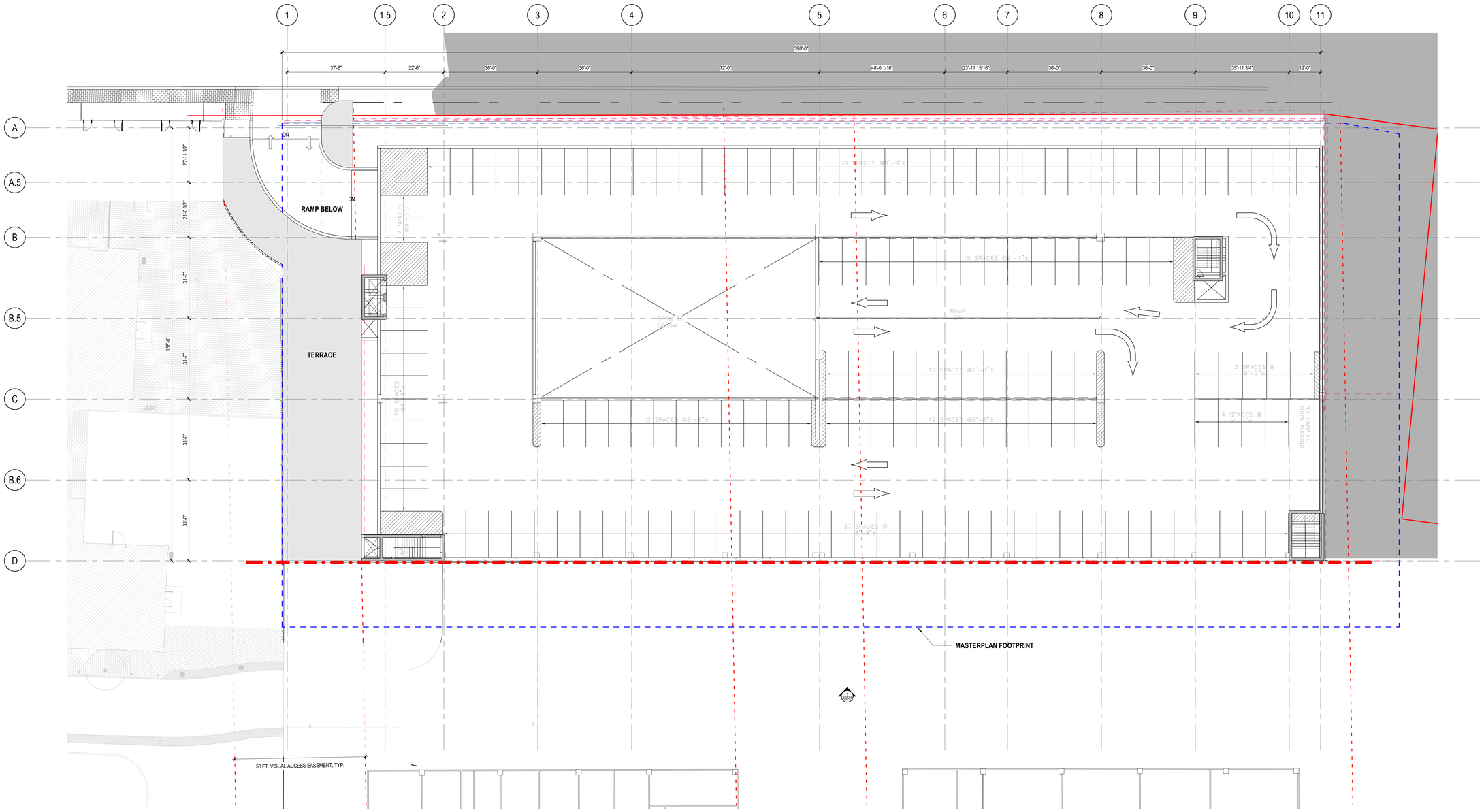

1 ROOF - ELEV. 59'-0": PHASE ONE
1/16" = 1'-0"

Perkins&Will

225 Franklin Street, Suite 1100
Boston, MA 02110
t 617.478.0300
f 617.478.0321
www.perkinswill.com

CONSULTANTS

STRUCTURAL ENGINEER
Thornton Tomasetti / Becker Structural Engineers
75 YORK ST
PORTLAND, ME 04101
t 207.879.1838
f 207.879.1822

MEP ENGINEER
Rist-Frost-Shumway Engineering
75 YORK ST
PORTLAND, ME 04101
t 207.879.1838

OWNER'S CONSULTANTS

CIVIL ENGINEER
Woodard & Curran
75 YORK ST
PORTLAND, ME 04101
t 207.879.1838

LANDSCAPE ARCHITECT
Michael Boucher Landscape Architecture
75 YORK ST
PORTLAND, ME 04101
t 207.879.1838 f207.879.1822

GENERAL CONSTRACTOR
Consigli
75 YORK ST
PORTLAND, ME 04101
t 207.879.1838

PROJECT

BLOCK FOUR

FORESIDE
PORTLAND, MAINE

PORTLAND FORESIDE DEVELOPMENT COMPANY
254 COMMERCIAL ST SUITE 118
PORTLAND, ME 04101

KEYPLAN

ISSUE CHART

MARK	ISSUE	DATE

SCHEMATIC DESIGN
11/08/2019

Job Number	157031.001
Drawn	Author
Checked	Checker
Approved	Approver

TITLE

ROOF PLAN ELEV. 59'-0"

SHEET NUMBER

A10-05

Copyright © 2016 Perkins+Will

11/8/2019 1:39:26 PM C:\Temp\58 FORE ST MASTERPLAN_Block Four_v2019_SlampakoudisA.rvt

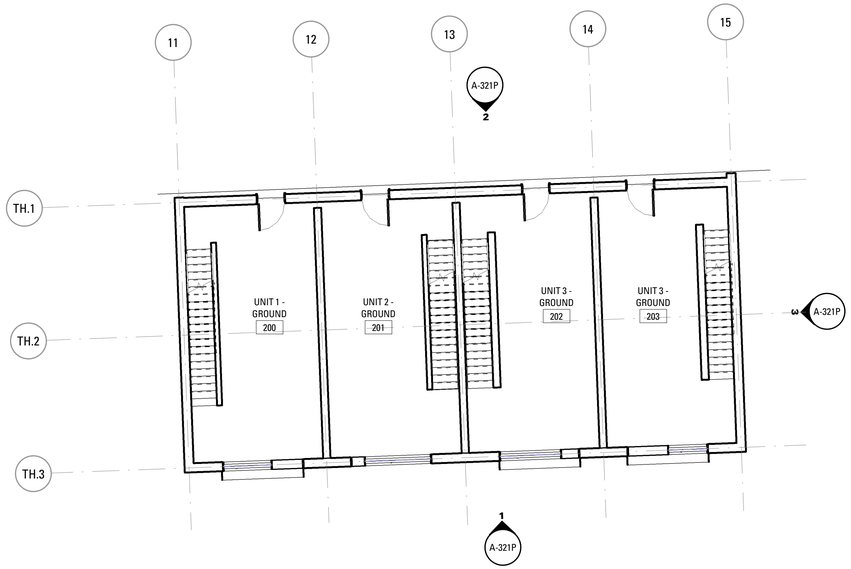

4 TOWNHOUSE - GROUND FLOOR

SCALE: 1/8" = 1'-0"

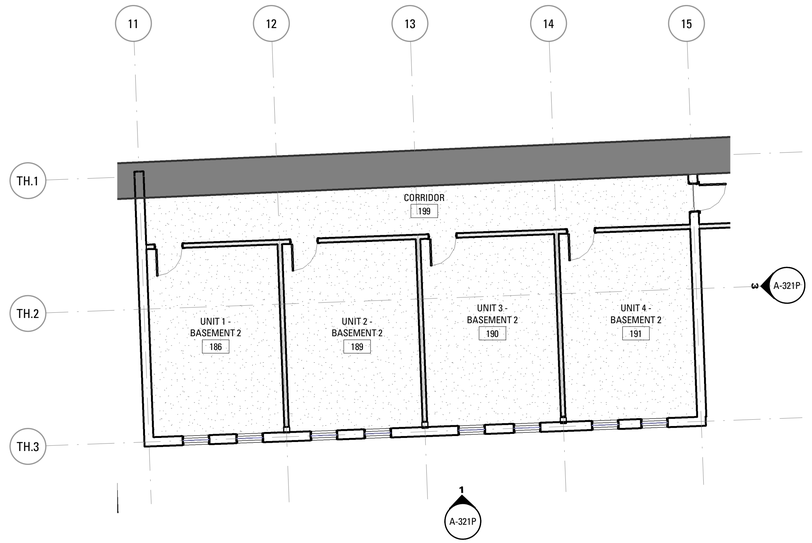

2 TOWNHOUSE- BASEMENT 2

SCALE: 1/8" = 1'-0"

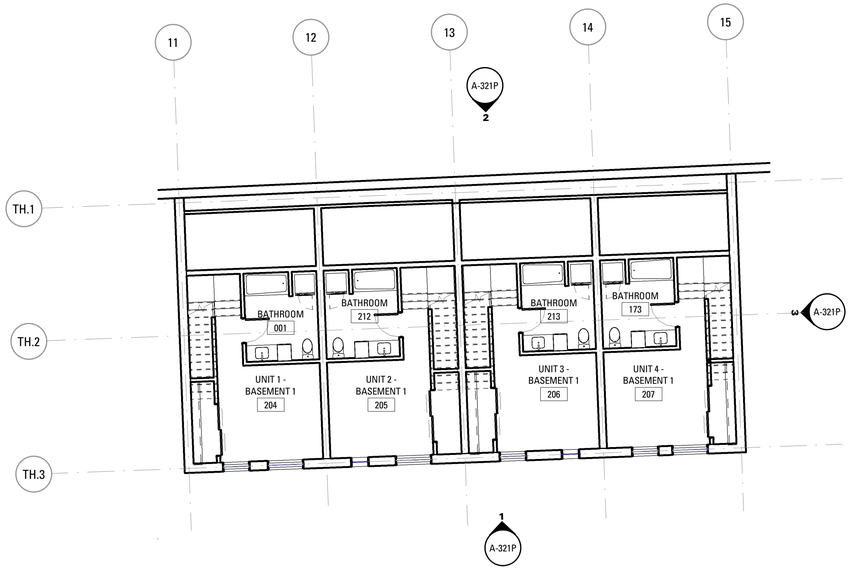

3 TOWNHOUSE - BASEMENT 1

SCALE: 1/8" = 1'-0"

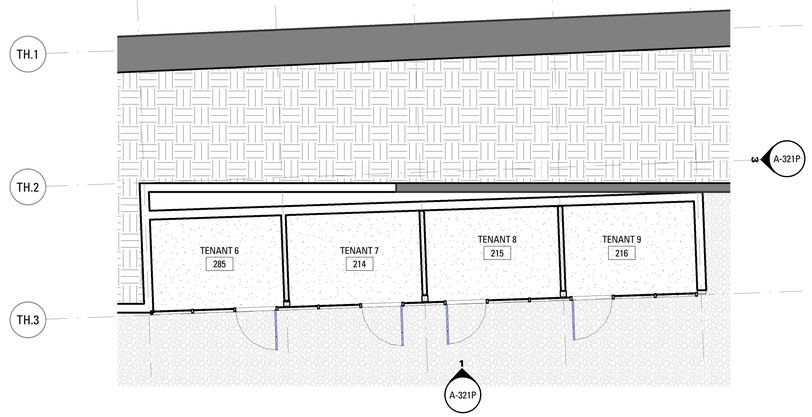

1 TOWNHOUSE - SITE GRADE

SCALE: 1/8" = 1'-0"

Bruner/Cott
ARCHITECTS
225 Friend St., Suite 701
Boston, MA 02114
617.492.8400
www.brunercott.com

Rev.	Date	Remarks

PORTLAND FORESIDE BLOCK 2

Date	OCTOBER 25, 2019
Scale	1/8" = 1'-0"
Project Number	
Drawn By	Author

TOWNHOUSE - FLOOR PLANS - SITE GRADE, BASEMENT 2, BASEMENT 1, GROUND FLOOR

A-121P

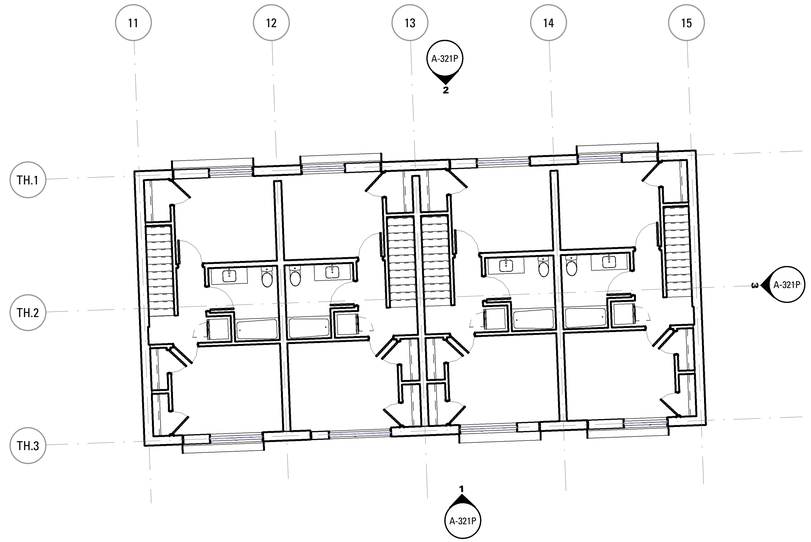

2 TOWNHOUSE - THIRD FLOOR
SCALE: 1/8" = 1'-0"

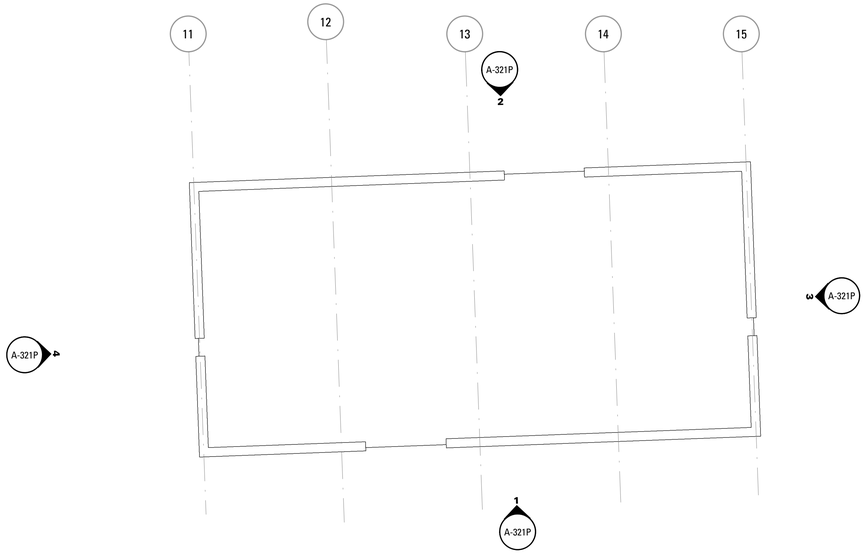

3 TOWNHOUSE - ROOF
SCALE: 1/8" = 1'-0"

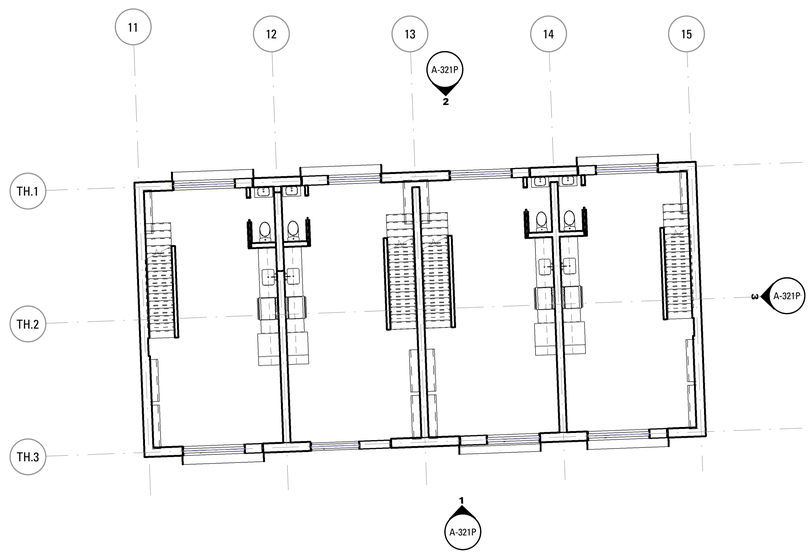

1 TOWNHOUSE - SECOND FLOOR
SCALE: 1/8" = 1'-0"

Bruner/Cott
ARCHITECTS
225 Friend St., Suite 701
Boston, MA 02114
617.492.8400
www.brunercott.com

Rev.	Date	Remarks

PORTLAND FORESIDE BLOCK 2

Date	OCTOBER 25, 2019
Scale	1/8" = 1'-0"
Project Number	
Drawn By	Author

TOWNHOUSE - FLOOR PLANS - SECOND, THIRD, ROOF

A-122P





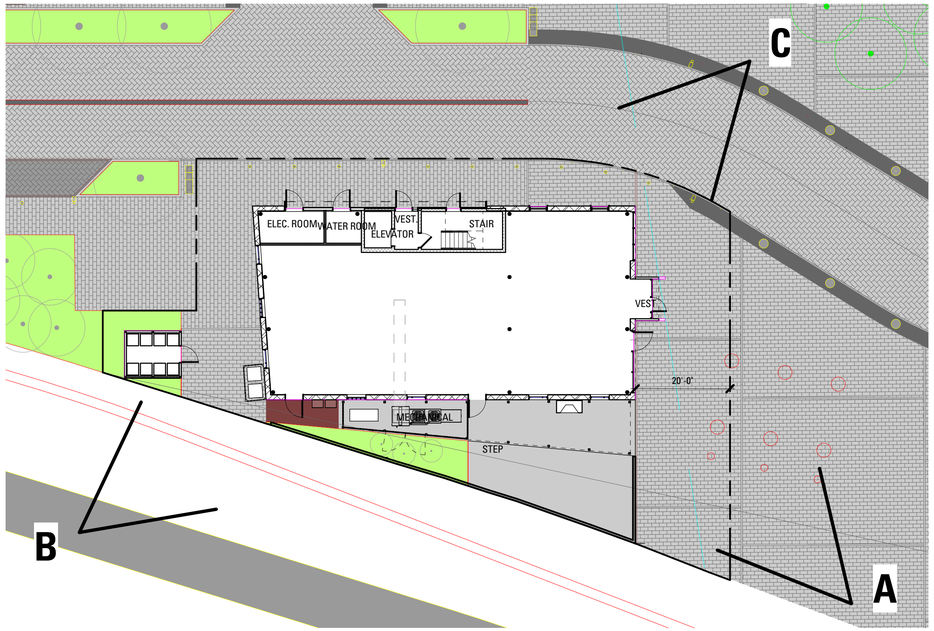



Bruner/Cott
ARCHITECTS
225 Friend St., Suite 701
Boston, MA 02114
617.492.8400
www.brunercott.com

Rev.	Date	Remarks

PORTLAND FORESIDE - BUILDING 12

RENDERINGS

Date	OCTOBER 25, 2019
Scale	1/16" = 1'-0"
Project Number	19.007
Drawn By	Author

G-000



A - 24 (FAR LEFT) 2/3 MARKETHALL (CENTER) AND 6A (RIGHT)



B - 2/3 MARKETHALL (LEFT) AND 6A (RIGHT)



C - 24 + ALLEY BUILDINGS (LEFT/CENTER) AND 2/3 MARKETHALL (RIGHT)



D - BUILDING 6B (LEFT) AND 3/2 MARKETHALL (RIGHT)



E - BUILDING 4 AND 3/2 MARKETHALL

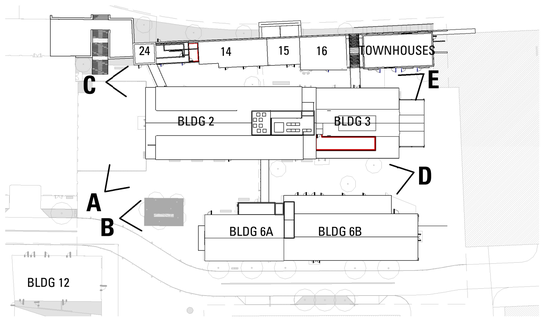

KEY PLAN

Bruner/Cott
ARCHITECTS
225 Friend St., Suite 701
Boston, MA 02114
617.492.8400
www.brunercott.com

Rev.	Date	Remarks

PORTLAND FORESIDE BLOCK 2

Date	OCTOBER 25, 2019
Scale	1/64" = 1'-0"
Project Number	
Drawn By	Author

RENDERINGS

G-000P

PORTLAND HISTORIC PRESERVATION BOARD

DECEMBER 4, 2019

Portland Foreside Development Company **Block 2**

CURRENT SITE PLAN

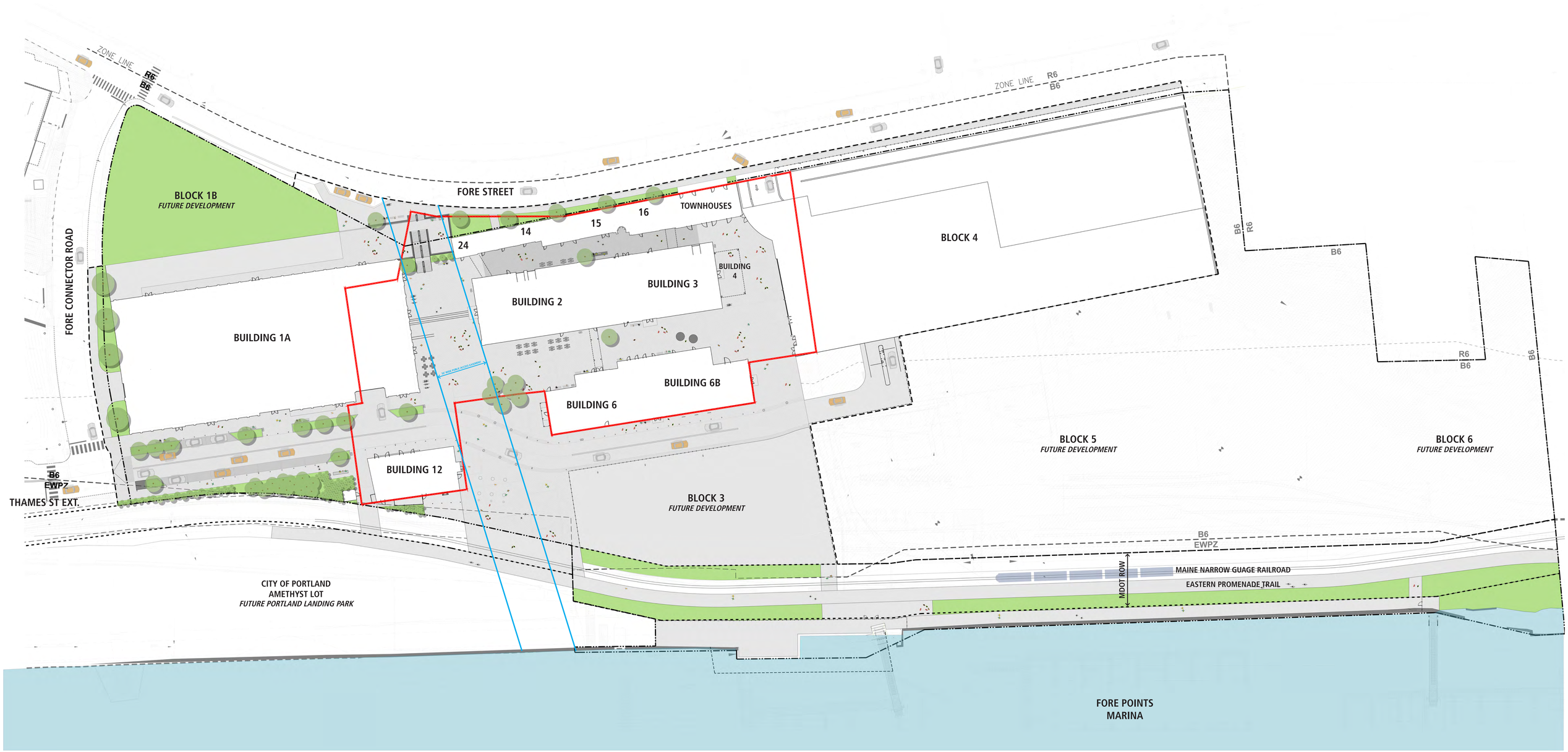

Portland Foreside Development
Portland, Maine

mbla | inc

PORTLAND COMPANY HISTORIC SITE ELEMENTS - THE STORY OF THE PORTLAND COMPANY

MEMORY OF NARROW GUAGE AND STANDARD TRACKS
representative tracks inlay in pavers



MEMORY OF BUILDING 1
brick inlay in pavers, actual width of walls



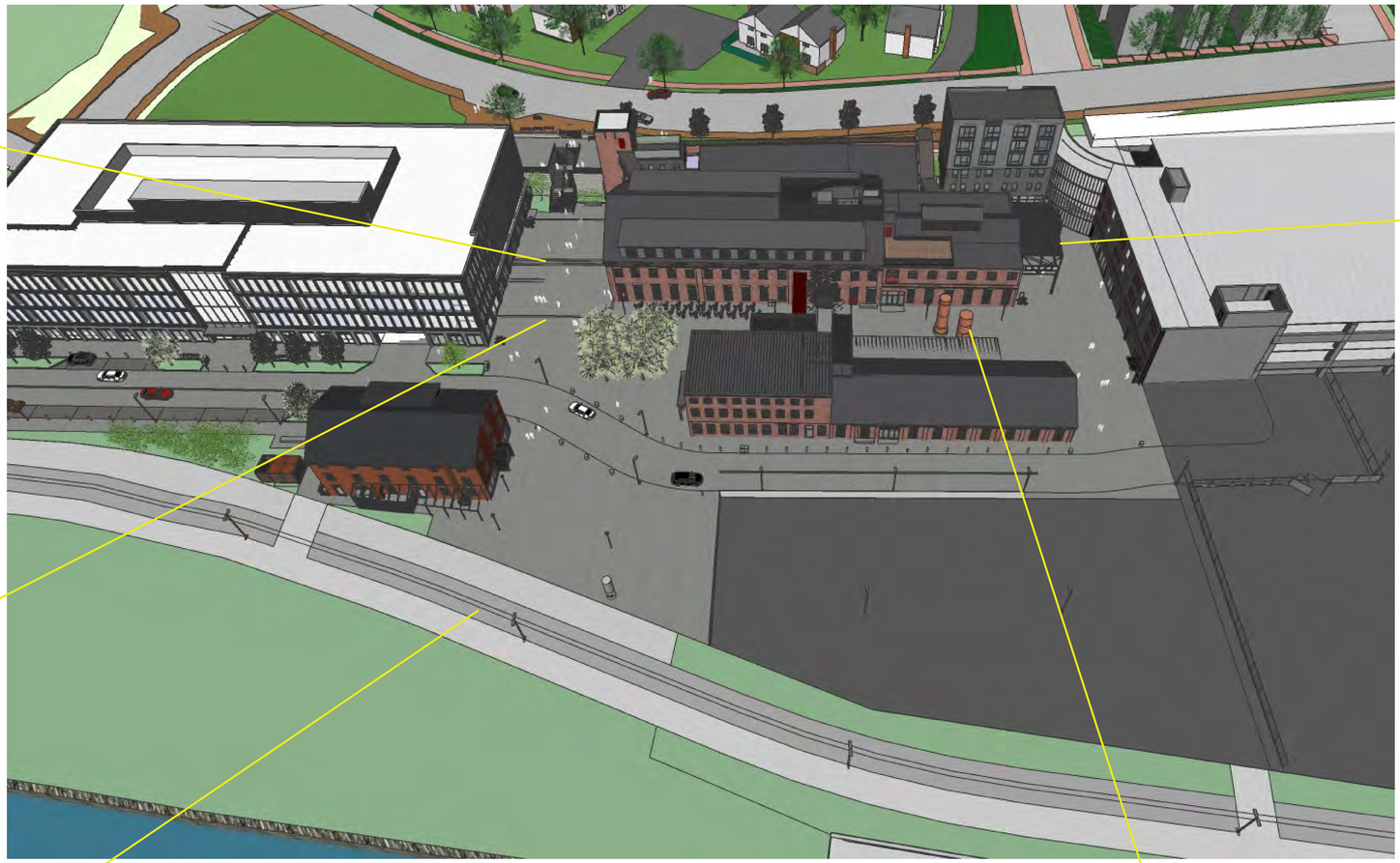

MEMORY OF BUILDING 4
steel framing







RAILWAY CONNECTION
continued operation of the Maine Narrow Guage Railroad

HISTORIC ARTIFACTS WATER TANK AND BOILERS
one to remain in existing location, two to be relocated





Portland Foreside Development
Portland, Maine

PEDESTRIAN SITE ACCESS

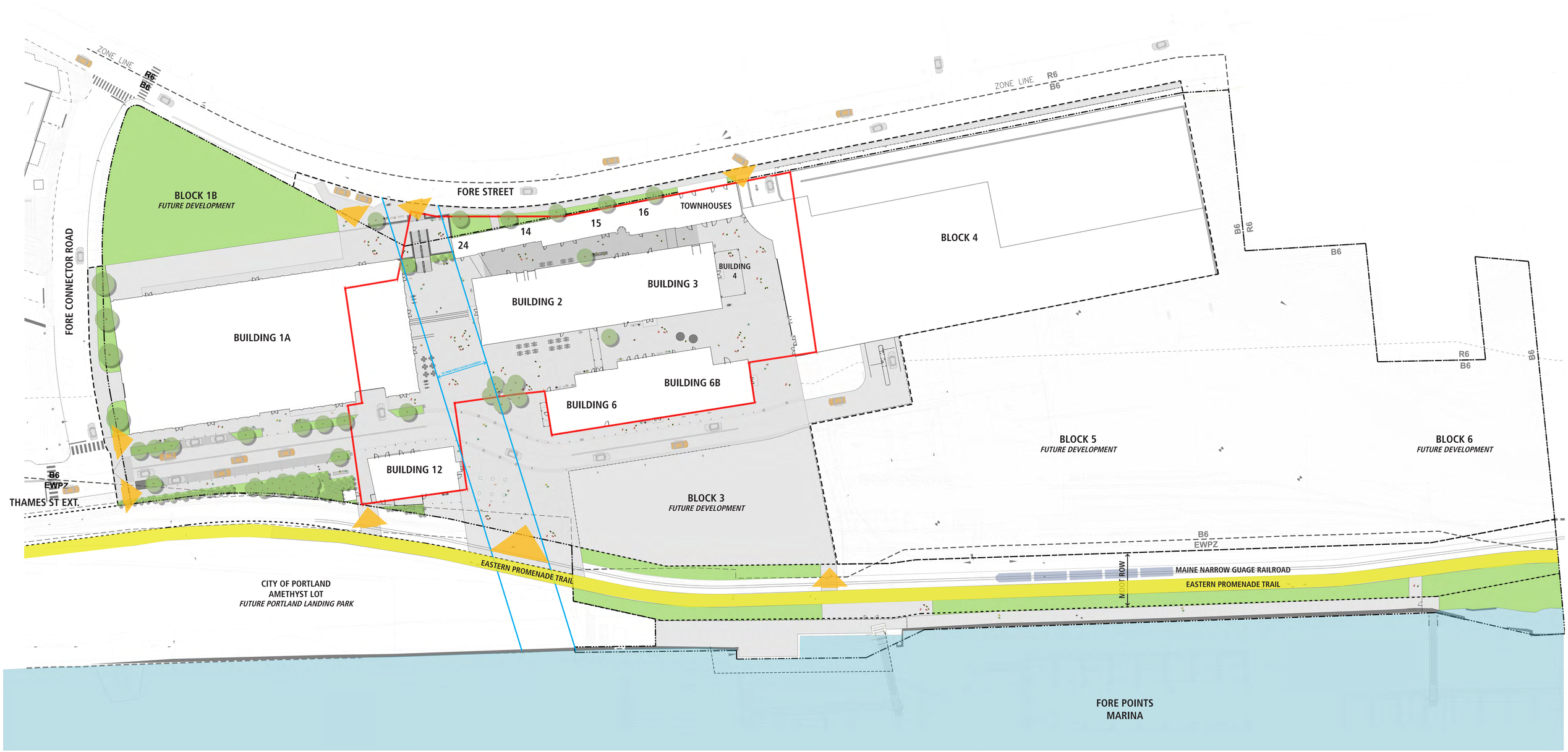

Portland Foreside Development
Portland, Maine

mbla | inc

STAIR DESIGN

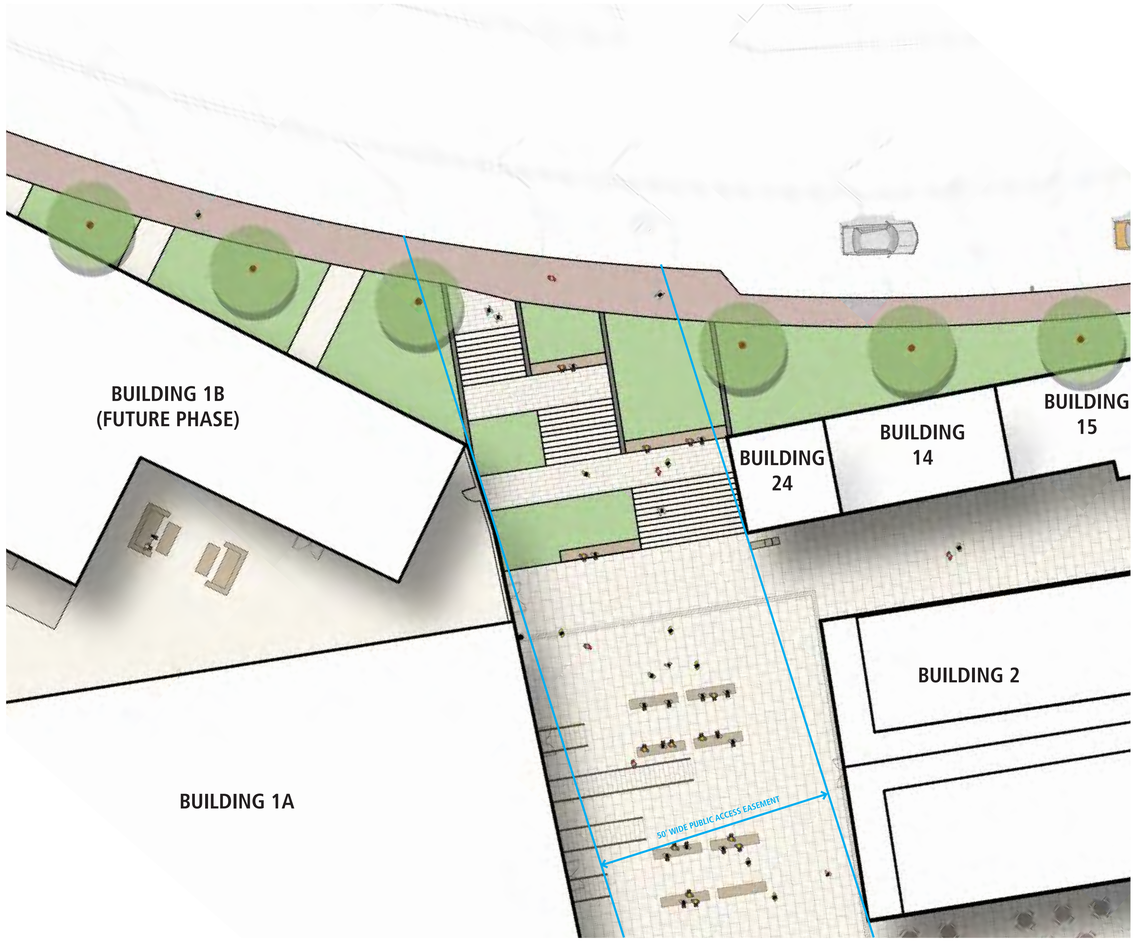

MASTER DEVELOPMENT PLAN, 2016



CURRENT DESIGN, 2019





Portland Foreside Development
Portland, Maine

STAIR PRECEDENT



SPANISH STEPS
ROME, ITALY
16’ WIDE (SIDES)



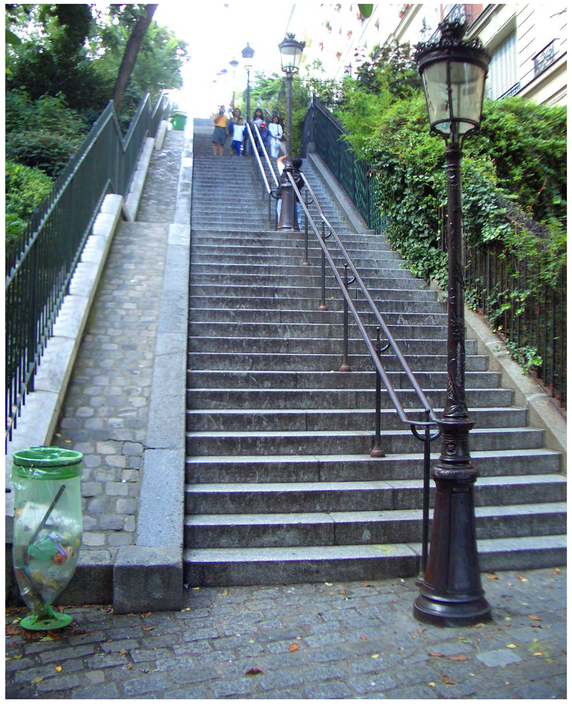



RUE DU MONT CENIS STAIRS
MONTMARTE, PARIS, FRANCE
10’ WIDE

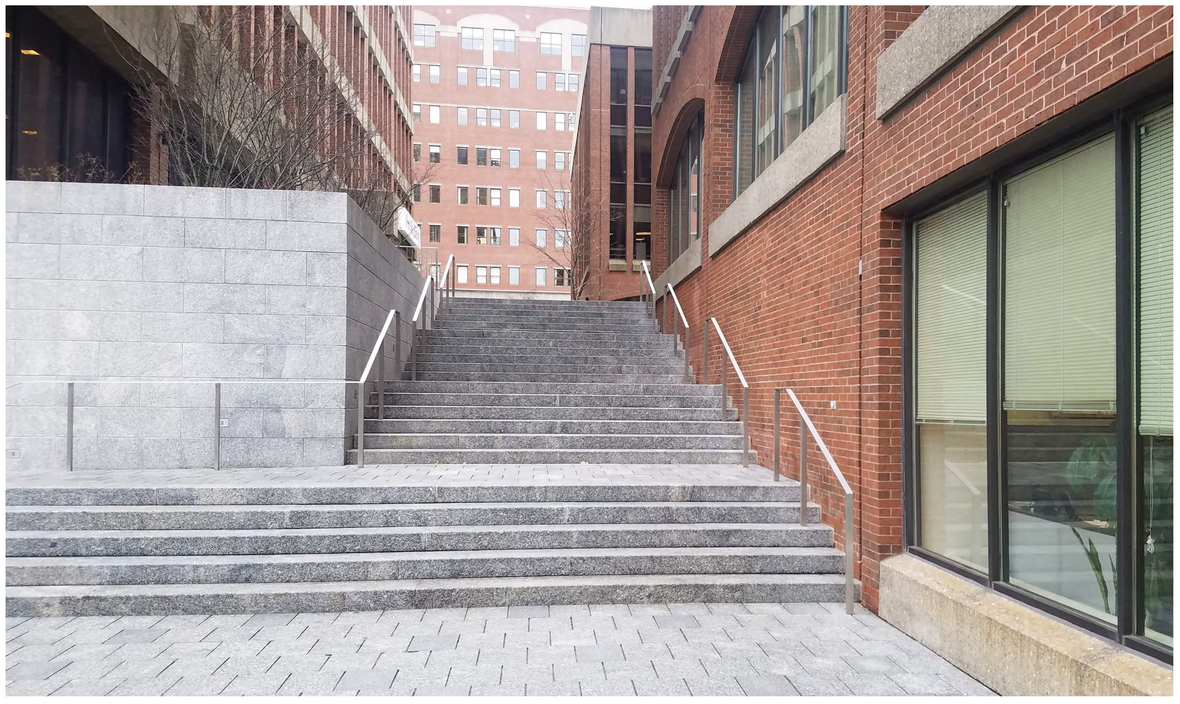

CANAL PLAZA STAIR
PORTLAND, MAINE
14’ WIDE

STAIR MATERIAL





Portland Foreside Development
Portland, Maine

FORE STREET PLAZA

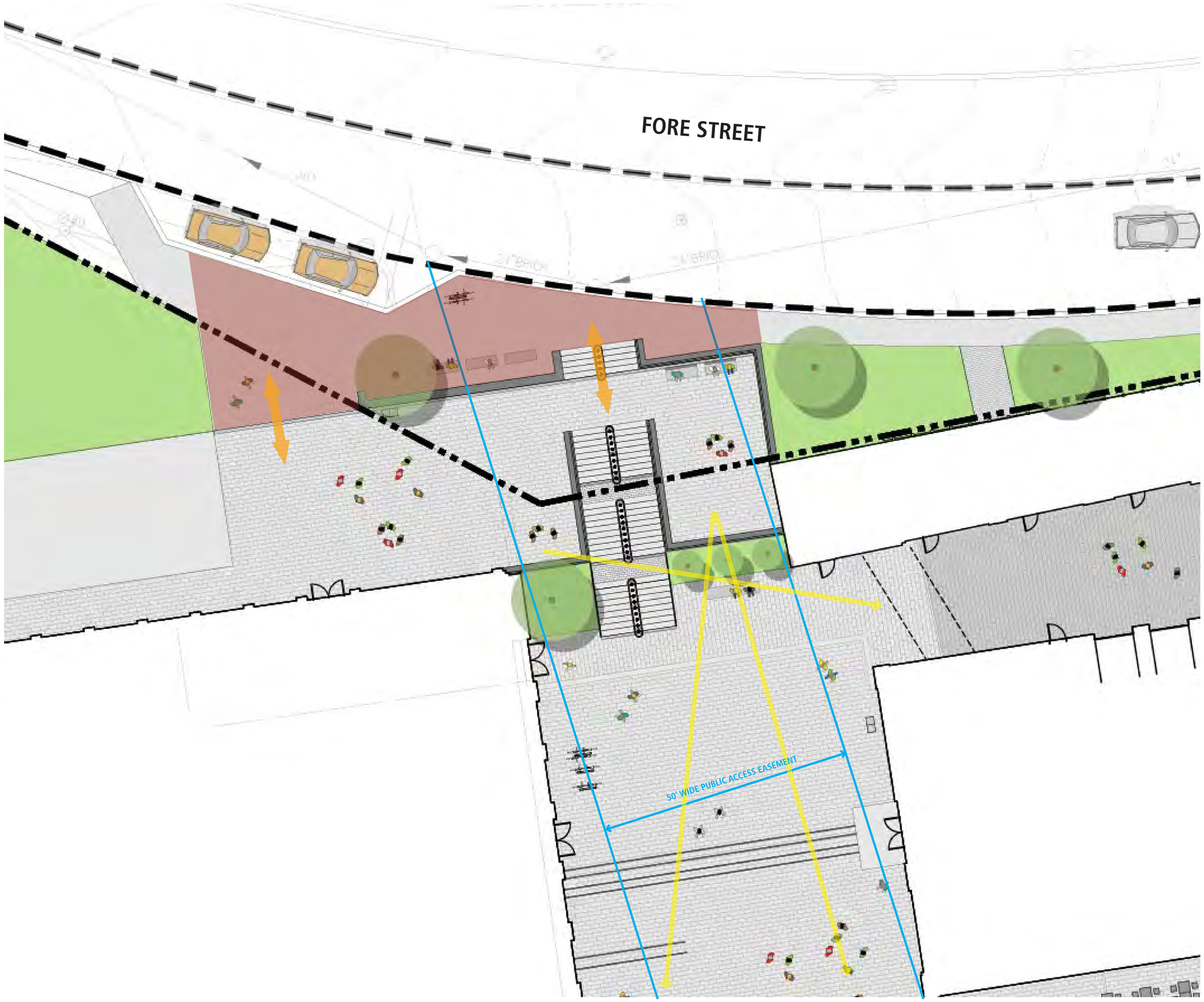

Portland Foreside Development
Portland, Maine

VIEW COMING DOWN FORE STREET



Portland Foreside Development
Portland, Maine

VIEW LOOKING UP FORE STREET



Portland Foreside Development
Portland, Maine

VIEW OF FORE STREET PLAZA



Portland Foreside Development
Portland, Maine



VIEW FROM BUILDING 2 PLAZA



Portland Foreside Development
Portland, Maine

VIEW FROM BUILDING 12 PLAZA



Portland Foreside Development
Portland, Maine

ARCHITECTURAL DESIGN: BUILDING 1 & RETAIL FRONTAGE







1. BUILDING WILL BE LARGE BY PORTLAND STANDARDS, USE MULTIPLE FACADE MATERIALS TO PROVIDE SCALE WHILE MAINTAINING A COHESIVE DESIGN IDEA.

2. DIFFERENTIATION OF GROUND FLOOR IS IMPORTANT, DISTINCT EXPRESSION FROM FLOORS ABOVE WITH MATERIALITY AND POTENTIALLY CANOPY TO CREATE A HORIZONTAL .

3. OPENING GROUND FLOOR SPACES TO THE OUTSIDE WITH LARGE DOORS TO ENGAGE RETAIL ACTIVITY.

4. INTEGRATION OF OFFICE TENANT SIGNAGE IS IMPORTANT IN CREATING A SINGULAR, SYNTHETIC ARCHITECTURE.

5. APPRECIATE THE FACTORY WINDOW AESTHETIC, MOST APPROPRIATE AT SCALE OF PEDESTRIAN VISITOR.

6. CONSIDER BUILDING IMAGE FROM THE WATER, WILL BE IMPORTANT FOR TENANT PRESENCE AND IMAGE.

7. ROOF IS VERY VISIBLE, CONSIDER OCCUPIABLE ROOF, TRELLIS, AND/OR SOLAR, RELOCATING SERVICES, MECHANICAL TO GARAGE WHERE POSSIBLE.

8. WOOD ELEMENTS ARE APPEALING FOR AESTHETICS & SUSTAINABILITY, CHARACTER TO BE REFINED RATHER THAN RUSTIC.

9. TALL, VERTICAL EXPRESSION OF UPPER FLOOR WINDOWS CONSISTENT WITH PORTLAND FABRIC

ARCHITECTURAL DESIGN: BUILDING 1 & RETAIL FRONTAGE









ARCHITECTURAL DESIGN: BUILDING 4 & RETAIL FRONTAGE









ARCHITECTURAL DESIGN: BUILDING 1 & ARTICULATION





PORTLAND EXAMPLES:

1. BUILDING WILL BE LARGE BY PORTLAND STANDARDS, USE MULTIPLE FACADE MATERIALS TO PROVIDE SCALE WHILE MAINTAINING A COHESIVE DESIGN IDEA.

2. DIFFERENTIATION OF GROUND FLOOR IS IMPORTANT, DISTINCT EXPRESSION FROM FLOORS ABOVE WITH MATERIALITY AND POTENTIALLY CANOPY TO CREATE A HORIZONTAL .

3. OPENING GROUND FLOOR SPACES TO THE OUTSIDE WITH LARGE DOORS TO ENGAGE RETAIL ACTIVITY.

4. INTEGRATION OF OFFICE TENANT SIGNAGE IS IMPORTANT IN CREATING A SINGULAR, SYNTHETIC ARCHITECTURE.

5. APPRECIATE THE FACTORY WINDOW AESTHETIC, MOST APPROPRIATE AT SCALE OF PEDESTRIAN VISITOR.

6. CONSIDER BUILDING IMAGE FROM THE WATER, WILL BE IMPORTANT FOR TENANT PRESENCE AND IMAGE.

7. ROOF IS VERY VISIBLE, CONSIDER OCCUPIABLE ROOF, TRELLIS, AND/OR SOLAR, RELOCATING SERVICES, MECHANICAL TO GARAGE WHERE POSSIBLE.

8. WOOD ELEMENTS ARE APPEALING FOR AESTHETICS & SUSTAINABILITY, CHARACTER TO BE REFINED RATHER THAN RUSTIC.

9. TALL, VERTICAL EXPRESSION OF UPPER FLOOR WINDOWS CONSISTENT WITH PORTLAND FABRIC

ARCHITECTURAL DESIGN: BUILDING 1 & ARTICULATION





PORTLAND EXAMPLES:



ARCHITECTURAL DESIGN: BUILDING 4 & ARTICULATION









CAMPUS ENTRANCE LOOKING EAST



BUILDING ONE SOUTHEAST CORNER



EXISTING CONTEXT: LOOKING TOWARD BUILDING ONE



BUILDING FOUR STAIR ENTRANCE



NORTH VIEW TOWARD BLOCK TWO AND BLOCK FOUR



BUILDING 12, FACING SOUTH



BUILDING 6 AND WIDE ALLEY



BUILDING 2 AND NARROW ALLEY

Interpretive Elements

Physical Elements- visual & direct contact

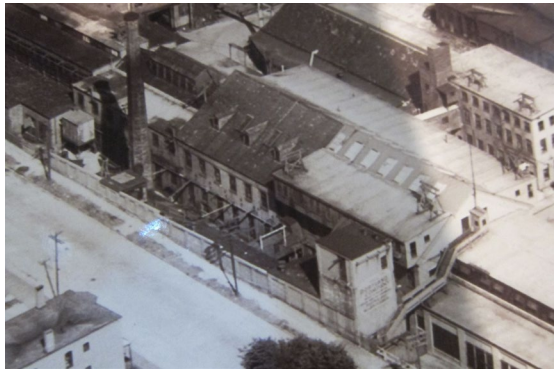

1. Retain with public access: Buildings 2, 3, 6A, 6B, 24, 16
2. Restore Building 2 original west elevation
3. Retain portions of Buildings 15 and 4 with vaults and wooden jib crane
4. Direct attention to Seawall and buttress walls at Embankment buildings
5. Reconstruct bridge between Buildings 2 and 6A
6. Reconstruct Building 12, Pattern Storehouse
7. Restore/reconstruct Fore Street paneled brick wall
8. Salvage and display two boilers and a cast iron tank to convey scale of Portland Company products
9. Reuse salvaged cast iron columns at Building 6A entrance



Interpretive Elements

Portland Company Story Elements

1. Scale of site operations and railways through Old Port
   - Very large aerial photos on glazed entrances
   - Website connect to Morrow-Spitzer history of Portland Company
2. Scale of fabricated products: trains, marine equipment, boilers, elevators
   - Prominent locations for boilers and tank
   - Large photos of objects in their fabrication spaces
3. Factory workers and industrial workspaces
   - Large photos in spaces where they were taken (Building 2)
4. Ghost presence of Building 1, Erecting Shed
   - Pavement inserts to locate footprint
   - Pavement inserts for narrow gauge and standard rails at central door to Building 2



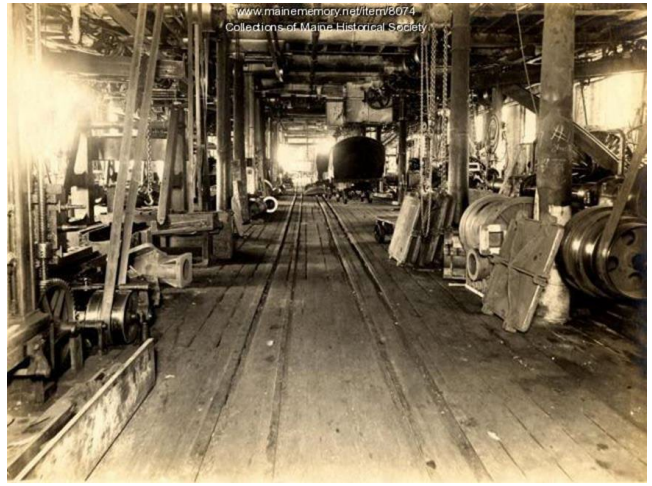

Building 6 Ground Floor Plan

The proposed addition will leave exposed one door and one window. The addition would need to be pulled back further to expose another window with adequate space.

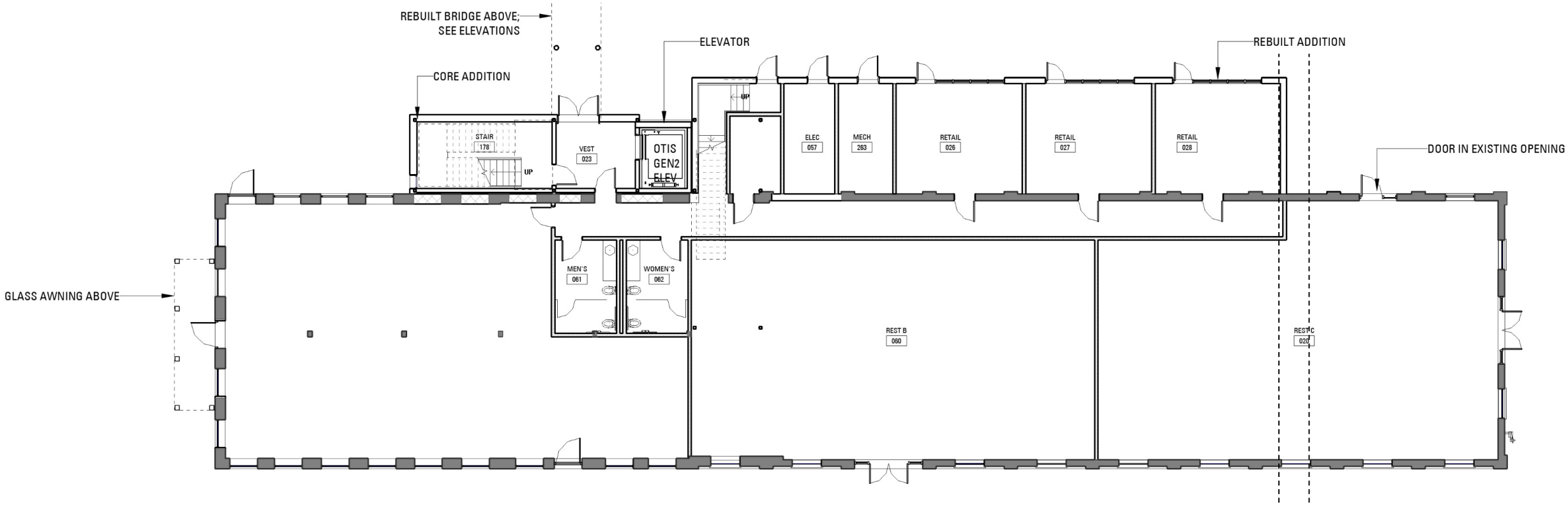

Building 6 Elevation




THE
PORTLAND
COMPANY
MARINE COMPLEX




PORTLAND
COMPANY


BIK 04

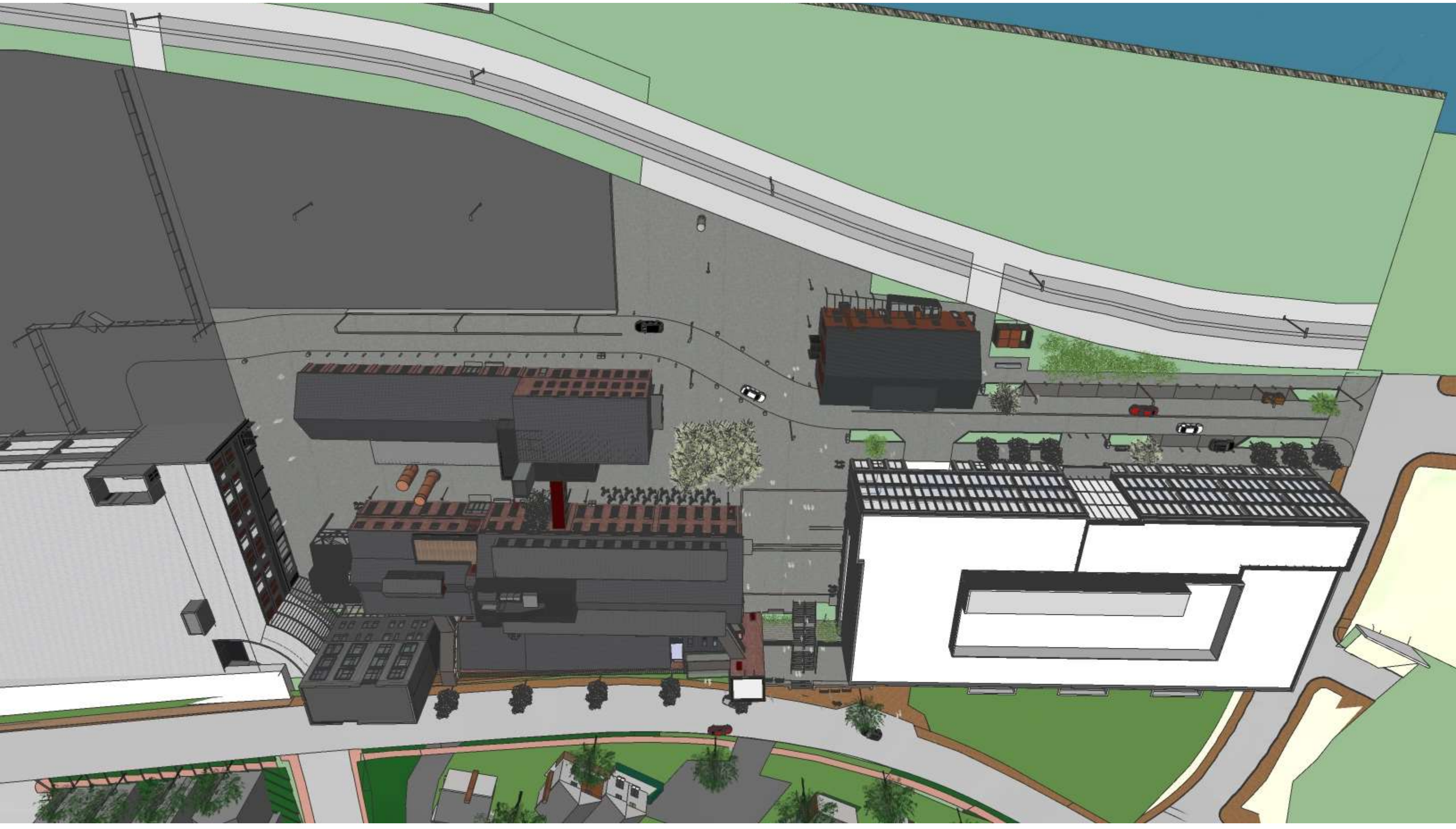

12. CONSTRUCTION MANAGEMENT PLAN

A Construction Management Plan has been prepared by Consigli Construction for the proposed development. The Contractor will be required to provide adequate safety fencing and signage directing pedestrians safely around the construction area. The Construction Management Plan is attached to this Section for your reference.

It should be noted that the constructability of future phases of development has been considered. The proposed development has been designed such that it will not prevent the construction of future phases of the 58 Fore Street Master Plan.

12.1 Attachments

- Construction Management Plan prepared by Consigli Construction (Uploaded to the Construction Management Plan folder on Eplan)

November 6, 2019

CONSIGLI
Est. 1905

58 Fore Street Phase 1 Summary
Construction Management Plan

Prepared For: Portland Department of Planning & Urban Development Department

Project Proponent: Portland Foreside Development Company LLC

Construction Manager: Consigli Construction Company Inc

Portland Foreside

Master Planning | April 2020 - April 2022

Phase 1 - Overall Project Scope & Timing

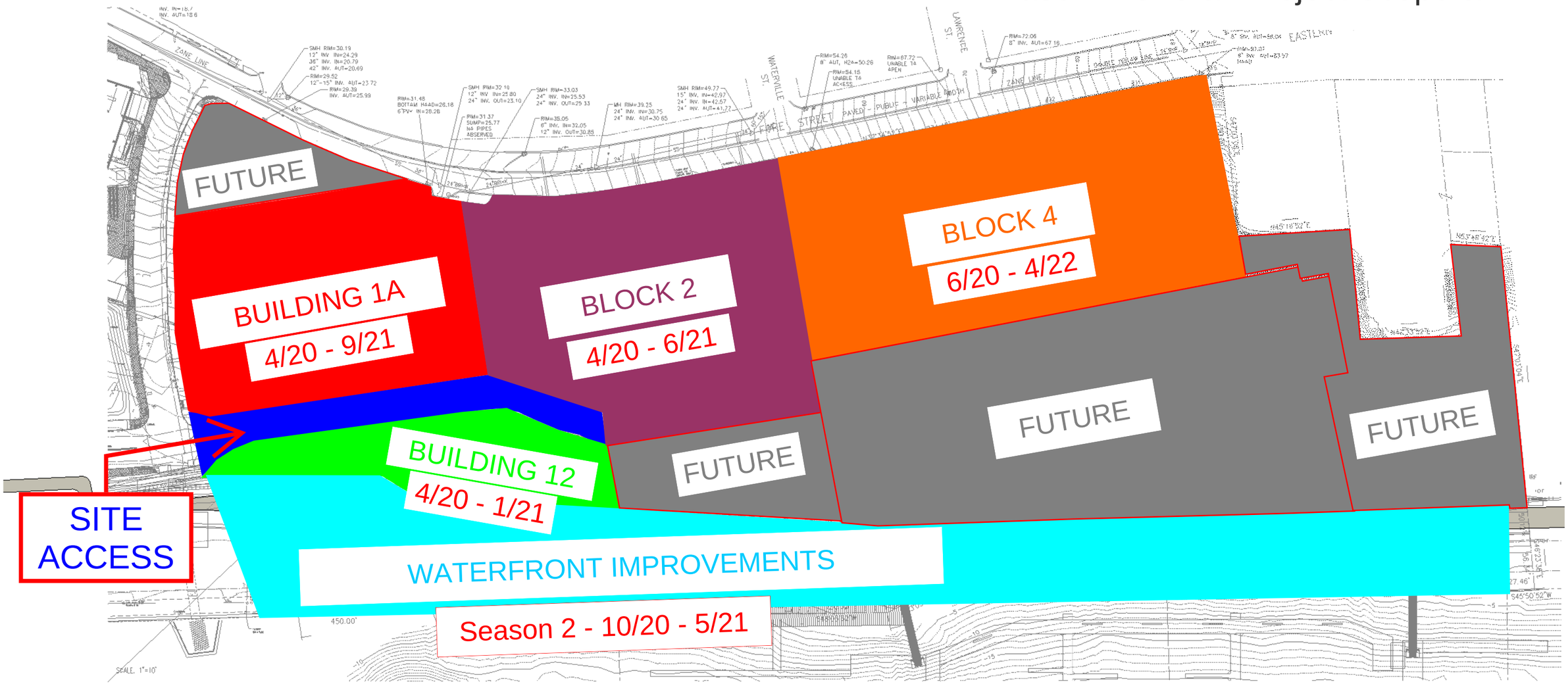

CONSIGLI
Est. 1905

November 6, 2019

CONSIGLI
Est. 1905

58 Fore Street – Building 1A
Construction Management Plan

Prepared For: Portland Department of Planning & Urban Development Department

Project Proponent: Portland Foreside Development Company LLC

Construction Manager: Consigli Construction Company Inc

Table of Contents

1. Construction Principles 2
2. Construction Administration and Communication 3
3. Construction Schedule 4
    a. Project Work Hours 4
    b. Project Schedule/Logistics 4
    c. Material Deliveries 4
    d. Material Storage and Laydown Areas 5
    e. Contractor Parking 5
4. Fire Protection for Construction Activities 6
5. Public Safety 8
    a. Noise 8
    b. Dust Control/Air Quality 8
    c. Vibration Monitoring 9
    d. Traffic Control 9
6. Traffic Management Plans 10
    a. Building Construction 10
    b. Utility Work at Fore Street 11
    c. Utility Work at New Connector Road 11
    d. Construction Traffic Routing 12

CONSIGLI
Est. 1905

Construction Principles

The purpose of this Construction Management plan is to identify, mitigate and plan for all potential impacts throughout the duration of building the Mixed-Use Development known as Building 1A, at 58 Fore Street. Portland Foreside Development Co and Consigli Construction are committed to a seamless, incident free project by means of typical practices used to ensure that public safety and community are at the forefront of priorities.

Throughout this CM plan we will refer to specific examples of potential construction practices, traffic control scenarios, neighboring building considerations and public safety; as well as measures in which these items will be managed throughout the project to accommodate the community as much as possible. While we will take the necessary precautions to meet City and State requirements for traffic, noise, dust, vibration, etc., this project will be disruptive to adjacent properties compared to the current condition. Along with our subcontractor team members, it is imperative that we have complete participation from all parties affiliated with the project to maintain our strict safety requirements and ensure a quality building for PFDC.

The Mixed-Use Development at 58 Fore Street known as Building 1A includes the construction of a new 4 story building consisting of 94,000 SF of Occupant Office Space, 5 Retail Shell spaces, 68 structured parking spaces, and 6 surface parking spaces. The building totals approximately 157,000 SF that will be primarily built out of steel and concrete. The completion of the project is anticipated for September 2021.

Consigli has extensively planned the project's schedule, site logistics and safety protocols that will be thoroughly covered in this report with graphics and narratives. This CM plan will continually be updated to meet the needs of the project, community and the city as the project progresses. We aim to deliver a safe and quality project to PFDC, their employees and the City of Portland by means of communication, teamwork and stewardship.

Construction Administration and Communication

Consigli Construction will be the Construction Manager on site throughout the duration of the project. As such, there will be a dedicated team of individuals tasked with managing quality, schedule, site logistics and safety. These personnel will manage and enforce the proposed CMP with all associated subcontractors and material vendors.

Larry Osmer – Senior Project Manager
617.719.9835, losmer@consigli.com

Site Communication

With the proximity to occupied buildings, community outreach and communication will be imperative throughout construction to keep the public informed of the expected turbulence caused by the project. Site signage will be prominently displayed to show pedestrian access around the site and any updates to the proposed CMP.

Quarterly reporting and updating of the CMP will be required to update the City and community of the following activities:

1) Construction schedule updates
2) Material deliveries, including notice of any oversized loads that may impact public traffic
3) Requests for upcoming off-hours work including weekends and holidays
4) Notice of any upcoming activities that may produce strong noise, vibration or dust that could adversely affect the neighboring communities.
5) Requests for any street openings or public sidewalk work to be completed as part of the construction contract

Construction Schedule

Project Work Hours

Construction work hours will be in accordance with Section 17-18 of the City of Portland Code of Ordinances.

The project site is located within zoning group B6 – Eastern Waterfront Mixed Zone but is within 500 feet of buildings used for residential purposes. As such, work hours will be limited to Monday – Friday 7:00 am – 7:00 pm. Should work extend into Weekends or Holidays, the use of heavy equipment will be kept within the time constraints of 8:00 am – 4:00 pm.

Project Schedule/Logistics

The project is anticipated to be approximately 10 months in duration. Beginning in April 2020 the project will be turned over to PFDC in September 2021.

Regarding scheduled work to take place within public streets and sidewalks, this work will comply with Section 25-129 – Noise, dust and debris of the City of Portland Code of Ordinances. The connection to public utilities and sidewalk construction will require work to be executed within Fore Street and the new connector road between Fore Street and the Thames Street Extension. This work will be scheduled and planned with the City of Portland prior to the execution, and all logistical concerns will be addressed prior to starting the work. The connection to public utilities is tentatively scheduled to happen in the Spring of 2020, with sidewalk construction tentatively scheduled to occur during the Fall of 2020. Temporary barricades, fencing and signage will be required during the installation to control pedestrian and vehicular movements around the work.

Material Deliveries

The construction will require coordination of material deliveries throughout the duration of the project. The following logistical plans show the planned lay-down areas, truck routes and safety protocols that will be in place throughout the duration of construction.

1. All construction traffic will enter site through the Thames Street extension, allowing construction vehicles to pull straight onto site without impacting the public right of way. Area will be provided within the limits of disturbance for construction vehicles to off load and turn around. The same route will be used for vehicles leaving the site. A flagger will be employed if needed during utility tie in work at Fore Street and the Connector Road, however these details will require additional coordination at a later date.

Construction activities, whether it be work going in place or material and equipment deliveries, will create additional traffic along Thames Street. Impacts beyond the increased vehicle traffic

will be mitigated through the simplified path of travel to site, and ability to offload all material deliveries within the project limits of disturbance.

Material Storage and Laydown Areas

The construction will require careful planning and management of the daily occurrences within the site limits. The logistical plans currently outlined intend to keep all construction staging, lay down area and temporary storage within the project limits and secured by temporary fencing. Specified areas will be granted to on-site subcontractors for staging materials to assist in managing their installation. With designated areas delegated to subcontractors, the site will remain accessible by incoming trucks without causing a queuing effect outside of the fence.

Contractor Parking

At the peak of construction, Consigli anticipates that up to 40 people will be on site working various trades associated with the building. All contractors, subcontractors and their employees will be prohibited from parking in on-street City spaces in the vicinity of the site. To account for the anticipated parking demand, we have allowed space for 40 designated parking spaces for the personal vehicles of construction personnel. All subcontractors will be educated during the bidding process of this requirement, language regarding off-street parking will be incorporated into each subcontract agreement, and individual employees will be informed of this requirement their first day on-site during the site safety orientation.

Fire Protection for Construction Activities

The 2013 Standard for Safeguarding Construction, Alteration and Demolition Operations will be enforced on this project by utilizing best management practices to mitigate the fire risks associated with construction. Consigli and its subcontractors will execute the following measures to provide a safe and secure work place:

1) PFD Fire Command Center: This centralized location will hold all current project information and will act as the first responders meeting point to obtain the most up to date information of construction. The following documents will be found at this location:
    a. Hot Work Permits: To be filled out daily by any person performing work that will generate a spark or create a potential fire risk on the job site. The permits are to be completed and approved by Consigli prior to work starting.
    b. Current Construction Schedule
    c. Current Construction Logistics Plan
    d. Pre-Incident Fire Plan

2) On-Site Fuel Storage: The use of different flammable liquids will be required throughout construction. A free-standing, 30-minute fire-rated enclosure will be built to safely and securely store all flammable liquids and gases. Fueling trucks will be used as needed, but will not be allowed to stage or park on site for any extended period.

3) Means of Egress: The building will be permanently equipped with (2) 2-way stair assemblies for means of egress. The East stair will be installed first, and will provide emergency egress throughout construction. This stair will be identified with temporary signage throughout construction indicating the floor level and exit path direction.

4) Good Housekeeping: Consigli Construction will provide necessary dumpsters for the removal of debris from the site. All subcontractors are responsible for the daily clean-up of their work areas to ensure no materials or tools which could pose a hazard to the building are left out over night. Daily safety walks by the Construction Superintendent will be utilized to ensure that all working floors are equipped with an inspected fire extinguisher and clear means of egress in the event of an emergency. Trash chutes and/or material hoists may be utilized to safely and efficiently remove all debris from the project.

5) On-site Security: The project site will be secured everyday by means of a temporary post driven construction fence and scrim. Lockable gates will be located at (3) locations for site access.

6) Rapid Communication: Evacuation notification will be provided by means of 2-way radios/cellular devices as well as strategically positioned air horns. Upon evacuation of the building all project personnel will report to the muster point location where the Construction Manager and all subcontractor foremen will perform accountability checks. The General Contractor field staff will then be dispatched to all project entry points and the PFD Command Center. Upon arrival of the first responders to the PFD Command Center, the General Contractor will provide an accountability and incident briefing.

Public Safety

The construction will be near pedestrian right of ways and will interact with public traffic throughout the duration of the project. Material deliveries, the use of cranes, lifts, and other heavy machinery all have the potential to impact typical public activity. As a member of the Portland community, Consigli will strive to limit, mitigate and avoid these potential impacts as much as possible by means of controlling noise, on-site dust, vibrations and traffic. By educating and informing the neighborhoods to the construction activities taking place we will aim to build a project that produces minimal impacts to the Thames Street and Fore Street communities.

Noise

Construction activities throughout the project will create noise that leaves the project site. It is the intent of the project team to limit the exposure to the noise by following Section 17-18 of the City of Portland Code of Ordinances. This project site is located within 500 feet of buildings classified as residential. As such, the project hours will be limited the 7:00 am – 7:00 pm, Monday – Friday. Should any weekend or holiday work be required the use of heavy machinery will not commence before 8:00 am. When this work is required, no less than 2-week advanced notice will be provided to PFDC and the neighboring communities.

Work related to the ground improvements, foundations, and structural steel will likely be the loudest activity experienced during construction. This work will take place from February 2020 – September 2020. Recently, many local projects have utilized similar means of construction to much success around Portland.

Dust Control/Air Quality

Maintaining an environmentally conscious project site will be a major priority for the project team to ensure safety not only for the neighboring communities, but also for the construction workers on site day after day. All soils and debris will be kept within the project limits following the State of Maine Department of Environmental Protection erosion control Best Management Practices:

1) Erosion controlled construction entrances
2) Tarped dump trucks leaving the site with soil/debris
3) On-going sidewalk and street cleaning activities
4) The installation of temporary, compacted staging areas within the job site
5) Using wetting agents to control dust
6) Covering stock piles when material is to be piled for long periods of time
7) Smoking will not be allowed on the job site

Vibration Monitoring

Some construction practices required for this project will result in ground vibration waves that may transmit to nearby buildings. Prior to any potential vibration causing activities taking place a pre-construction survey will be conducted to review and document existing conditions of all adjacent structures. The survey will encompass all properties abutting the proposed project site to include the following addresses:

- 100 Fore Street (Currently Under Construction)
- 58 Fore Street (remaining buildings owned by PFDC)
- Residences Abutting Fore Street adjacent to the Project Site (private residences)
- 58 Fore Street (Fore Points Marina)

Site removals, vibratory compaction, and ground improvements will be employed on this project and will be monitored by a third-party monitoring company. A pre-construction meeting will be planned with abutting property owners to discuss geological conditions, construction specifications and methods of installation that create vibration.

As an added measure of control, vibration monitoring may be performed at stone or masonry structures within 100' of the site compaction and ground improvements scope performed.

Traffic Control

Throughout the construction process Franklin Street and Thames Street will experience increased traffic due to construction activities. Material deliveries, contractor access and public utility integration will be encountered and mitigated through coordinated logistics plans (provided within this CM Plan), on-site safety personnel, way-finding signage and well-organized traffic control devices. PFDC & Consigli will strive to inform and direct the neighborhood of the activities taking place in public areas as construction progresses through completion. During the Spring of 2020 public utility connections will be made at Fore Street and the Connector Road. During the late Summer or Fall 2020, sidewalk improvements will be made adjacent to the Connector Road.

The main access point to the construction project will be through the private road accessed at the easternmost point of Thames Street. In order to maintain access for tenants of 58 Fore Street and two-way traffic on the private road, site flaggers will be utilized as needed to direct both construction and marina traffic.

CONSIGLI

Est. 1905

Traffic Management Diagrams

58 FORE ST - BLOCK 1A

CONSTRUCTION MANAGEMENT PLAN

06.19.2019

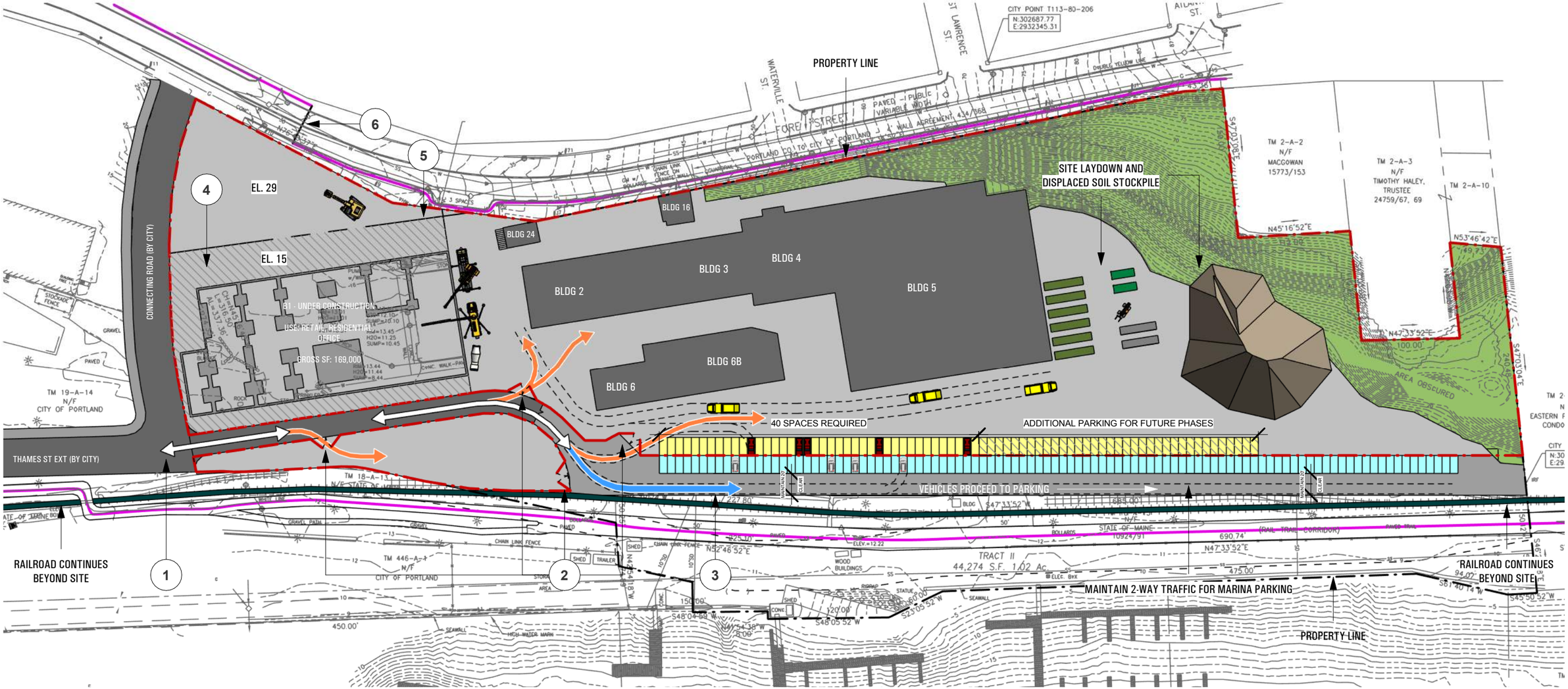

PLAN LEGEND

1. MARINA AND CONSTRUCTION ACCESS VIA THAMES ST EXT
2. MAINTAIN SEPARATE, SECURE ACCESS TO SITE(S)
3. ACCESS TO MARINA PARKING; NO CONSTRUCTION PARKING
4. CONSTRUCTION UNDERWAY AT BLOCK 1A SITE
5. EDGE OF BUILDING FOOTPRINT; NO THRU ACCESS ON SITE
6. PEDESTRIANS TO UTILIZE EXISTING CROSSWALK ON FORE ST

PARKING LEGEND

PARKING: MARINA - 100 SPACES

PARKING: CONSTRUCTION - 40 SPACES

GRAPHIC KEY

MARINA TRAFFIC

CONSTRUCTION TRAFFIC

SHARED TRAFFIC

CONSTRUCTION FENCING

PEDESTRIAN ACCESS

CONSIGLI
Est. 1905

58 FORE ST - BLOCK 1A

CONSTRUCTION MANAGEMENT PLAN

Utility Tie-ins

06.19.2019

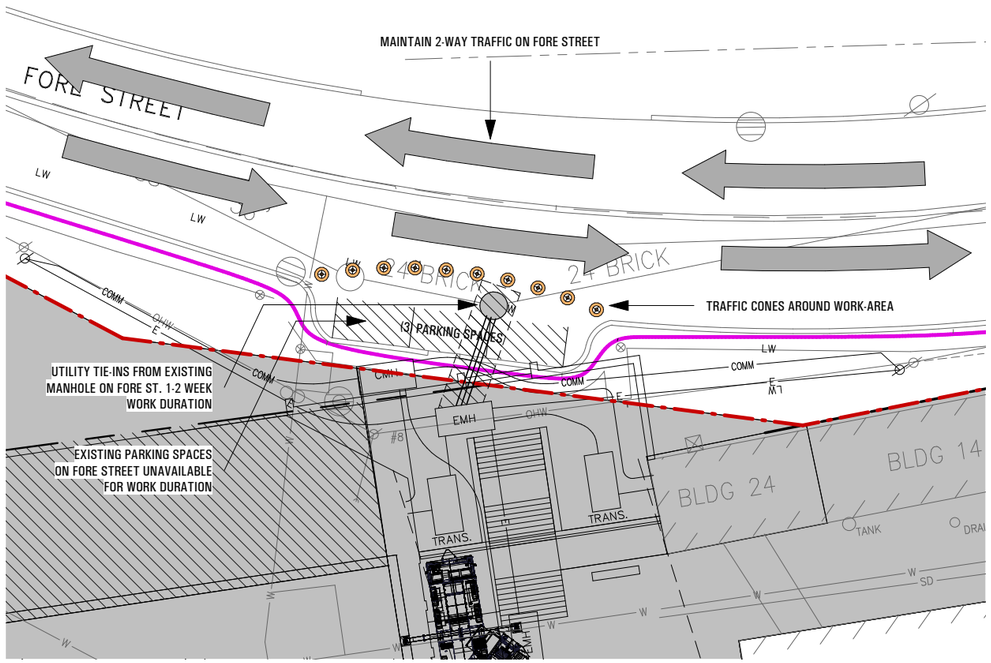

1 CMP - Utility Work on Fore St.
1/32" = 1'-0"

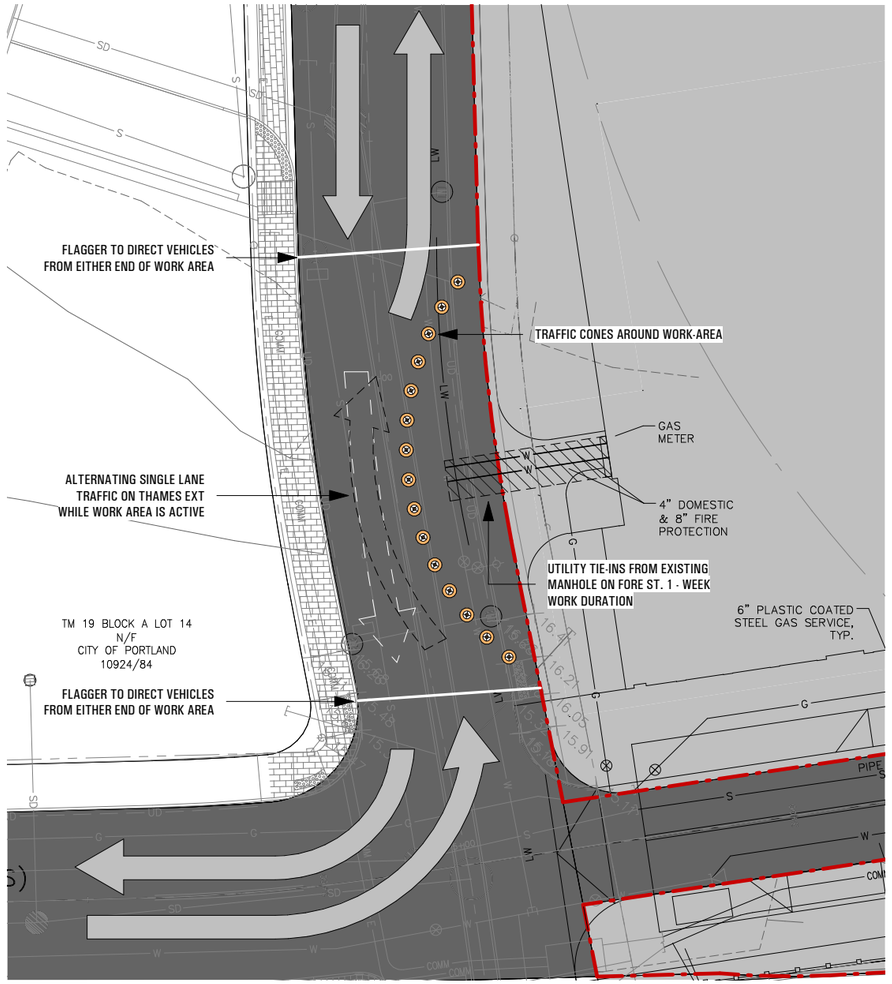

2 Utility Work on Thames St. Extension
1/32" = 1'-0"

CONSIGLI
Est. 1905

58 FORE ST - BLOCK 1A

CONSTRUCTION MANAGEMENT PLAN

Traffic Control Plan

06.19.2019

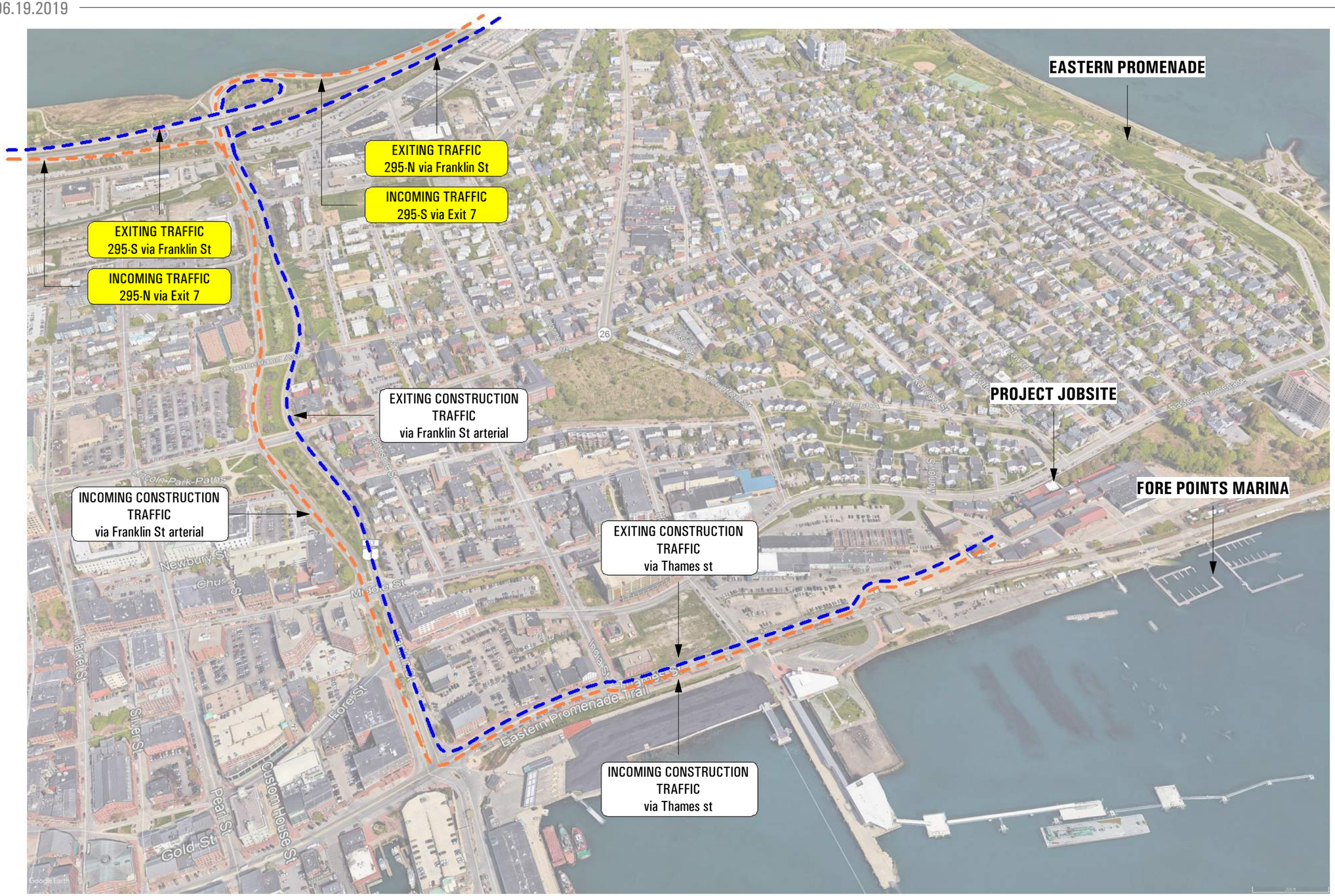

CONSIGLI
Est. 1905

November 6, 2019

CONSIGLI
Est. 1905

58 Fore Street – Building 12
Construction Management Plan

Prepared For: Portland Department of Planning & Urban Development Department

Project Proponent: Portland Foreside Development Company LLC

Construction Manager: Consigli Construction Company Inc

Table of Contents

1. Construction Principles 2
2. Construction Administration and Communication 3
3. Construction Schedule 4
    a. Project Work Hours 4
    b. Project Schedule/Logistics 4
    c. Material Deliveries 4
    d. Material Storage and Laydown Areas 4
    e. Contractor Parking 5
4. Fire Protection for Construction Activities 6
5. Public Safety 8
    a. Noise 8
    b. Dust Control/Air Quality 8
    c. Vibration Monitoring 9
    d. Traffic Control 9
6. Historical Preservation 10
7. Traffic Management Plans 11
    a. Building Construction 11
    b. Construction Traffic Routing 12

CONSIGLI
Est. 1905

Construction Principles

The purpose of this Construction Management plan is to identify, mitigate and plan for all potential impacts throughout the duration of building the Mixed-Use Development known as Building 12, at 58 Fore Street. Portland Foreside Development Co and Consigli Construction are committed to a seamless, incident free project by means of typical practices used to ensure that public safety and community are at the forefront of priorities.

Throughout this CM plan we will refer to specific examples of potential construction practices, traffic control scenarios, neighboring building considerations and public safety; as well as measures in which these items will be managed throughout the project to accommodate the community as much as possible. While we will take the necessary precautions to meet City and State requirements for traffic, noise, dust, vibration, etc., this project will be disruptive to adjacent properties compared to the current condition. Along with our subcontractor team members, it is imperative that we have complete participation from all parties affiliated with the project to maintain our strict safety requirements and ensure a quality building for PFDC.

The Mixed-Use Development at 58 Fore Street known as Building 12 includes the construction of a new 3 story building consisting of 6,400 SF of Occupant Office Space and 1 Retail Shell space. The building totals approximately 9,700 SF that will be primarily built out of steel and concrete. The completion of the project is anticipated for December 2020.

Consigli has extensively planned the project's schedule, site logistics and safety protocols that will be thoroughly covered in this report with graphics and narratives. This CM plan will continually be updated to meet the needs of the project, community and the city as the project progresses. We aim to deliver a safe and quality project to PFDC, their employees and the City of Portland by means of communication, teamwork and stewardship.

Construction Administration and Communication

Consigli Construction will be the Construction Manager on site throughout the duration of the project. As such, there will be a dedicated team of individuals tasked with managing quality, schedule, site logistics and safety. These personnel will manage and enforce the proposed CMP with all associated subcontractors and material vendors.

Larry Osmer – Senior Project Manager
617.719.9835, losmer@consigli.com

Site Communication

With the proximity to occupied buildings, community outreach and communication will be imperative throughout construction to keep the public informed of the expected turbulence caused by the project. Site signage will be prominently displayed to show pedestrian access around the site and any updates to the proposed CMP.

Quarterly reporting and updating of the CMP will be required to update the City and community of the following activities:

1) Construction schedule updates
2) Material deliveries, including notice of any oversized loads that may impact public traffic
3) Requests for upcoming off-hours work including weekends and holidays
4) Notice of any upcoming activities that may produce strong noise, vibration or dust that could adversely affect the neighboring communities.
5) Requests for any street openings or public sidewalk work to be completed as part of the construction contract

Construction Schedule

Project Work Hours

Construction work hours will be in accordance with Section 17-18 of the City of Portland Code of Ordinances.

The project site is located within zoning group B6 – Eastern Waterfront Mixed Zone but is within 500 feet of buildings used for residential purposes. As such, work hours will be limited to Monday – Friday 7:00 am – 7:00 pm. Should work extend into Weekends or Holidays, the use of heavy equipment will be kept within the time constraints of 8:00 am – 4:00 pm.

Project Schedule/Logistics

The project is anticipated to be approximately 9 months in duration. Beginning in April 2020 the project will be turned over to PFDC in December 2020.

All utility connections are planned to be made at the Properties private entrance road, so no work will take place within public streets and sidewalks.

Material Deliveries

The construction will require coordination of material deliveries throughout the duration of the project. The following logistical plans show the planned lay-down areas, truck routes and safety protocols that will be in place throughout the duration of construction.

1. All construction traffic will enter site through the Thames Street extension, allowing construction vehicles to pull straight onto site without impacting the public right of way. Area will be provided within the limits of disturbance for construction vehicles to off load and turn around. The same route will be used for vehicles leaving the site.

Construction activities, whether it be work going in place or material and equipment deliveries, will create additional traffic along Thames Street. Impacts beyond the increased vehicle traffic will be mitigated through the simplified path of travel to site, and ability to offload all material deliveries within the project limits of disturbance.

Material Storage and Laydown Areas

The construction will require careful planning and management of the daily occurrences within the site limits. The logistical plans currently outlined intend to keep all construction staging, lay down area and temporary storage within the project limits and secured by temporary fencing. Specified areas will be granted to on-site subcontractors for staging materials to assist in managing their installation. With designated areas delegated to subcontractors, the site will remain accessible by incoming trucks without causing a queuing effect outside of the fence.

Contractor Parking

At the peak of construction, Consigli anticipates that up to 15 people will be on site working various trades associated with the building. All contractors, subcontractors and their employees will be prohibited from parking in on-street City spaces in the vicinity of the site. To account for the anticipated parking demand, we have allowed space for 5 designated parking spaces for the personal vehicles of construction personnel, as well as additional overflow spaces to be utilized as necessary. All subcontractors will be educated during the bidding process of this requirement, language regarding off-street parking will be incorporated into each subcontract agreement, and individual employees will be informed of this requirement their first day on-site during the site safety orientation.

Fire Protection for Construction Activities

The 2013 Standard for Safeguarding Construction, Alteration and Demolition Operations will be enforced on this project by utilizing best management practices to mitigate the fire risks associated with construction. Consigli and its subcontractors will execute the following measures to provide a safe and secure work place:

1) PFD Fire Command Center: This centralized location will hold all current project information and will act as the first responders meeting point to obtain the most up to date information of construction. The following documents will be found at this location:
    a. Hot Work Permits: To be filled out daily by any person performing work that will generate a spark or create a potential fire risk on the job site. The permits are to be completed and approved by Consigli prior to work starting.
    b. Current Construction Schedule
    c. Current Construction Logistics Plan
    d. Pre-Incident Fire Plan

2) On-Site Fuel Storage: The use of different flammable liquids will be required throughout construction. A free-standing, 30-minute fire-rated enclosure will be built to safely and securely store all flammable liquids and gases. Fueling trucks will be used as needed but will not be allowed to stage or park on site for any extended period.

3) Means of Egress: The building will be permanently equipped with a 2-way stair assembly for means of egress. This stair will provide emergency egress throughout construction and will be identified with temporary signage throughout construction indicating the floor level and exit path direction.

4) Good Housekeeping: Consigli Construction will provide necessary dumpsters for the removal of debris from the site. All subcontractors are responsible for the daily clean-up of their work areas to ensure no materials or tools which could pose a hazard to the building are left out over night. Daily safety walks by the Construction Superintendent will be utilized to ensure that all working floors are equipped with an inspected fire extinguisher and clear means of egress in the event of an emergency. Trash chutes and/or material hoists may be utilized to safely and efficiently remove all debris from the project.

5) On-site Security: The project site will be secured everyday by means of a temporary post driven construction fence and scrim. Lockable gates will be located at (2) locations for site access.

6) Rapid Communication: Evacuation notification will be provided by means of 2-way radios/cellular devices as well as strategically positioned air horns. Upon evacuation of the building all project personnel will report to the muster point location where the Construction Manager and all subcontractor foremen will perform accountability checks. The General Contractor field staff will then be dispatched to all project entry points and the PFD Command Center. Upon arrival of the first responders to the PFD Command Center, the General Contractor will provide an accountability and incident briefing.

Public Safety

The construction will be near pedestrian right of ways and will interact with public traffic throughout the duration of the project. Material deliveries, the use of cranes, lifts, and other heavy machinery all have the potential to impact typical public activity. As a member of the Portland community, Consigli will strive to limit, mitigate and avoid these potential impacts as much as possible by means of controlling noise, on-site dust, vibrations and traffic. By educating and informing the neighborhoods to the construction activities taking place we will aim to build a project that produces minimal impacts to the Thames Street and Fore Street communities.

Noise

Construction activities throughout the project will create noise that leaves the project site. It is the intent of the project team to limit the exposure to the noise by following Section 17-18 of the City of Portland Code of Ordinances. This project site is located within 500 feet of buildings classified as residential. As such, the project hours will be limited the 7:00 am – 7:00 pm, Monday – Friday. Should any weekend or holiday work be required the use of heavy machinery will not commence before 8:00 am. When this work is required, no less than 2-week advanced notice will be provided to PFDC and the neighboring communities.

Work related to site preparation, foundations, and structural steel will likely be the loudest activity experienced during construction. This work will take place from April 2020 – August 2020. Recently, many local projects have utilized similar means of construction to much success around Portland.

Dust Control/Air Quality

Maintaining an environmentally conscious project site will be a major priority for the project team to ensure safety not only for the neighboring communities, but also for the construction workers on site day after day. All soils and debris will be kept within the project limits following the State of Maine Department of Environmental Protection erosion control Best Management Practices:

1) Erosion controlled construction entrances
2) Tarped dump trucks leaving the site with soil/debris
3) On-going sidewalk and street cleaning activities as necessary
4) The installation of temporary, compacted staging areas within the job site
5) Using wetting agents to control dust
6) Covering stock piles when material is to be piled for long periods of time
7) Smoking will not be allowed on the job site

Vibration Monitoring

Some construction practices required for this project will result in ground vibration waves that may transmit to nearby buildings. Prior to any potential vibration causing activities taking place a pre-construction survey will be conducted to review and document existing conditions of all adjacent structures. The survey will encompass all properties abutting the proposed project site to include the following addresses:

- 100 Fore Street (Currently Under Construction)
- 58 Fore Street (Fore Points Marina)
- 58 Fore Street (remaining buildings owned by PFDC)

Site fill and vibratory compaction will be employed on this project and will be monitored by a third-party monitoring company. A pre-construction meeting will be planned with abutting property owners to discuss geological conditions, construction specifications and methods of installation that create vibration.

Traffic Control

Throughout the construction process Franklin Street and Thames Street will experience increased traffic due to construction activities. Material deliveries, contractor access and public utility integration will be encountered and mitigated through coordinated logistics plans (provided within this CM Plan), on-site safety personnel, way-finding signage and well-organized traffic control devices. PFDC & Consigli will strive to inform and direct the neighborhood of the activities taking place in public areas as construction progresses through completion.

The main access point to the construction project will be through the private road accessed at the easternmost point of Thames Street. To maintain access for tenants of 58 Fore Street and two-way traffic on the private road, site flaggers will be utilized as needed to direct both construction and marina traffic.

Historical Preservation

Historic reconstruction of the masonry façade of Building 12 is a critical aspect to the development at 58 Fore Street. A detailed scope will be developed and submitted for approval by the City's Historic Preservation Program Manager before work commences. As the scope includes the reconstruction of a brick masonry façade utilizing current construction technologies to replicate the appearance of the original Portland Company Building 12, scans, photos and other spatial documentation have been taken and will be shared during the planning of this scope to inform the design development.

CONSIGLI

Est. 1905

Traffic Management Diagrams

58 FORE ST - BUILDING 12

CONSTRUCTION MANAGEMENT PLAN

07.15.2019

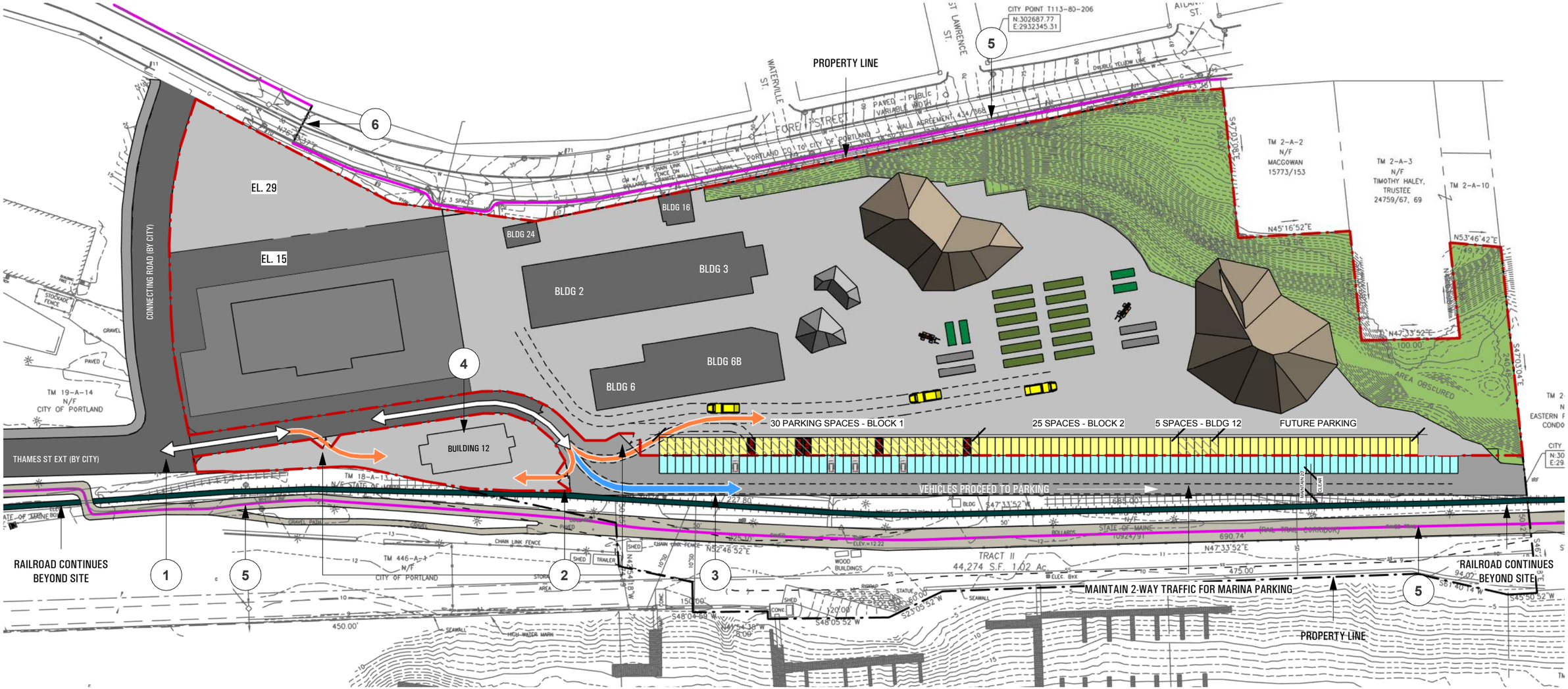

PLAN LEGEND

1. MARINA AND CONSTRUCTION ACCESS VIA THAMES ST EXT
2. MAINTAIN SEPARATE, SECURE ACCESS TO SITE(S)
3. ACCESS TO MARINA PARKING; NO CONSTRUCTION PARKING
4. BUILDING 12 - UNDER CONSTRUCTION
5. MAINTAIN PEDESTRIAN ACCESS THROUGHOUT PHASE
6. PEDESTRIANS TO UTILIZE EXISTING CROSSWALK ON FORE ST

PARKING LEGEND

PARKING: MARINA - 100 SPACES

PARKING: CONSTRUCTION - 30 SPACES

GRAPHIC KEY

MARINA TRAFFIC

CONSTRUCTION TRAFFIC

SHARED TRAFFIC

CONSTRUCTION FENCING

PEDESTRIAN ACCESS

CONSIGLI Est. 1905

58 FORE ST - BUILDING 12

CONSTRUCTION MANAGEMENT PLAN

Traffic Control Plan

06.19.2019

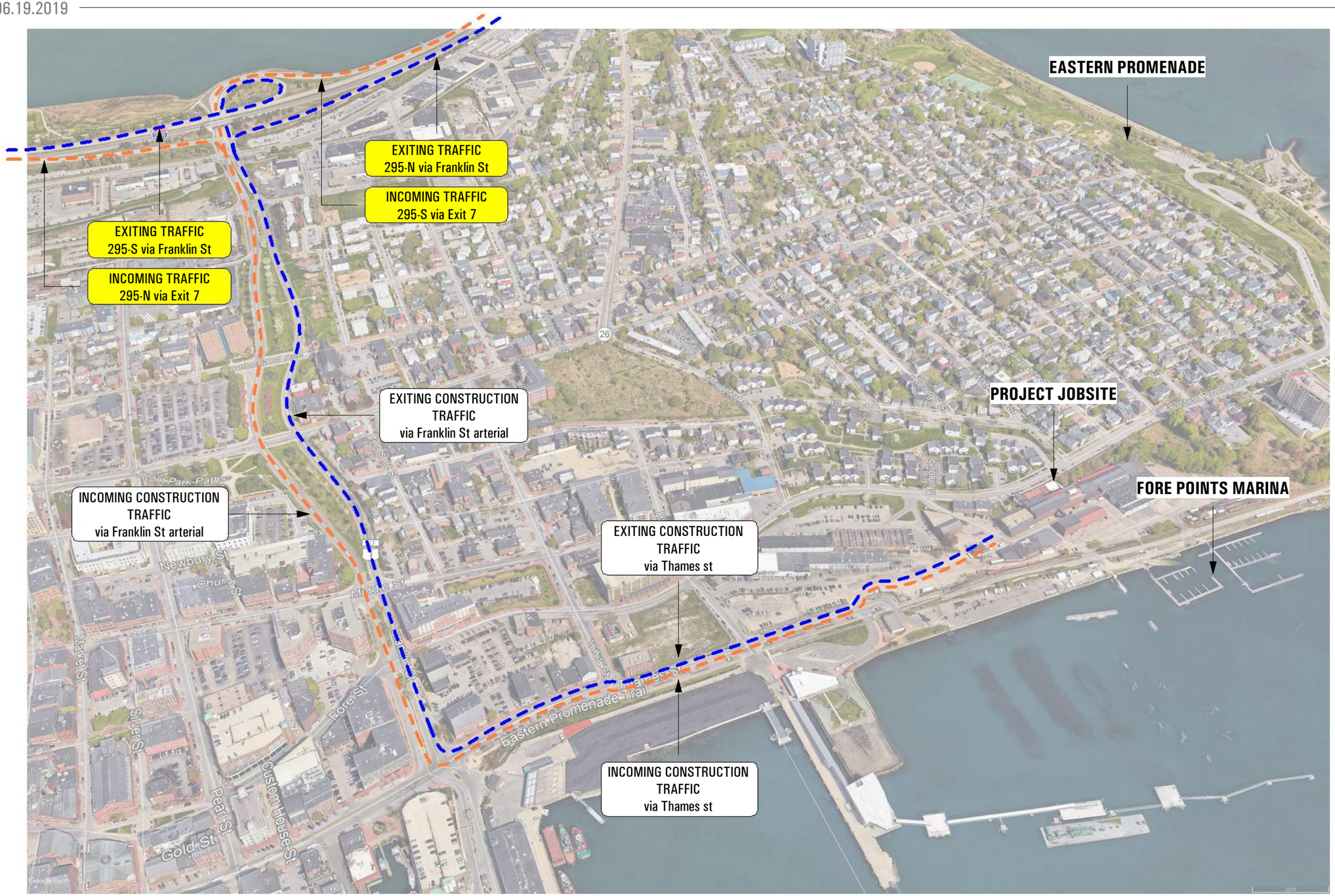

CONSIGLI
Est. 1905

November 6, 2019

CONSIGLI
Est. 1905

58 Fore Street – BLOCK 2
Construction Management Plan

Prepared For: Portland Department of Planning & Urban Development Department

Project Proponent: Portland Foreside Development Company LLC

Construction Manager: Consigli Construction Company Inc

Table of Contents

1. Construction Principles 2
2. Construction Administration and Communication 3
    a. Site Communication 3
3. Construction Schedule 4
    a. Project Work Hours 4
    b. Project Schedule/Logistics 4
    c. Material Deliveries 4
    d. Material Storage and Laydown Areas 5
    e. Contractor Parking 5
4. Fire Protection for Construction Activities 6
5. Public Safety 8
    a. Noise 8
    b. Dust Control/Air Quality 8
    c. Vibration Monitoring 9
    d. Traffic Control 9
6. Historical Preservation 10
7. Traffic Management Plans 11
    a. Building Construction 11
    b. Utility Work at Fore Street 12
    c. Construction Traffic Routing 13

CONSIGLI
Est. 1905

Construction Principles

The purpose of this Construction Management plan is to identify, mitigate and plan for all potential impacts throughout the duration of building the Mixed-Use Development known as Block 2, at 58 Fore Street. Portland Foreside Development Co and Consigli Construction are committed to a seamless, incident free project by means of typical practices used to ensure that public safety and community are at the forefront of priorities.

Throughout this CM plan we will refer to specific examples of potential construction practices, traffic control scenarios, neighboring building considerations and public safety; as well as measures in which these items will be managed throughout the project to accommodate the community as much as possible. While we will take the necessary precautions to meet City and State requirements for traffic, noise, dust, vibration, etc., this project will be disruptive to adjacent properties compared to the current condition. Along with our subcontractor team members, it is imperative that we have complete participation from all parties affiliated with the project to maintain our strict safety requirements and ensure a quality building for PFDC.

The Mixed-Use Development at 58 Fore Street known as Block 2 includes renovation of the Portland Company Historic District, reconstruction of several Portland Company Buildings, and construction of 8 new Townhomes in a 4 story configuration. In aggregate, the buildings represent 17,000 SF Public Marketplace space, 12,000 SF of Occupant Office Space, 17,500 SF leasable event space, 7,600 SF Residential space, and 13 Retail Shell spaces. The buildings total approximately 70,350 SF that will be primarily built out of steel and concrete supporting wood frame construction. The completion of the project is anticipated for June 2021.

Consigli has extensively planned the project's schedule, site logistics and safety protocols that will be thoroughly covered in this report with graphics and narratives. This CM plan will continually be updated to meet the needs of the project, community and the city as the project progresses. We aim to deliver a safe and quality project to PFDC, their employees and the City of Portland by means of communication, teamwork and stewardship.

Construction Administration and Communication

Consigli Construction will be the Construction Manager on site throughout the duration of the project. As such, there will be a dedicated team of individuals tasked with managing quality, schedule, site logistics and safety. These personnel will manage and enforce the proposed CMP with all associated subcontractors and material vendors.

Larry Osmer – Senior Project Manager
617.719.9835, losmer@consigli.com

Site Communication

With the proximity to occupied buildings, community outreach and communication will be imperative throughout construction to keep the public informed of the expected turbulence caused by the project. Site signage will be prominently displayed to show pedestrian access around the site and any updates to the proposed CMP.

Quarterly reporting and updating of the CMP will be required to update the City and community of the following activities:

1) Construction schedule updates
2) Material deliveries, including notice of any oversized loads that may impact public traffic
3) Requests for upcoming off-hours work including weekends and holidays
4) Notice of any upcoming activities that may produce strong noise, vibration or dust that could adversely affect the neighboring communities.
5) Requests for any street openings or public sidewalk work to be completed as part of the construction contract

Construction Schedule

Project Work Hours

Construction work hours will be in accordance with Section 17-18 of the City of Portland Code of Ordinances.

The project site is located within zoning group B6 – Eastern Waterfront Mixed Zone but is within 500 feet of buildings used for residential purposes. As such, work hours will be limited to Monday – Friday 7:00 am – 7:00 pm. Should work extend into Weekends or Holidays, the use of heavy equipment will be kept within the time constraints of 8:00 am – 4:00 pm.

Project Schedule/Logistics

The project is anticipated to be approximately 15 months in duration. Beginning in April 2020 the project will be turned over to PFDC in July 2021.

Regarding scheduled work to take place within public streets and sidewalks, this work will comply with Section 25-129 – Noise, dust and debris of the City of Portland Code of Ordinances. The connection to public utilities and sidewalk construction will require work to be executed within Fore Street. This work will be scheduled and planned with the City of Portland prior to the execution, and all logistical concerns will be addressed prior to starting the work. The connection to public utilities is tentatively scheduled to happen in the Spring of 2020, with sidewalk construction tentatively scheduled to occur during the Fall of 2020. Temporary barricades, fencing and signage will be required during the installation to control pedestrian and vehicle movements around the work.

Material Deliveries

The construction will require coordination of material deliveries throughout the duration of the project. The following logistical plans show the planned lay-down areas, truck routes and safety protocols that will be in place throughout the duration of construction.

1. All construction traffic will enter site through the Thames Street extension, allowing construction vehicles to pull straight onto site without impacting the public right of way. Area will be provided within the limits of disturbance for construction vehicles to off load and turn around. The same route will be used for vehicles leaving the site.

Construction activities, whether it be work going in place or material and equipment deliveries, will create additional traffic along Thames Street. Impacts beyond the increased vehicle traffic will be mitigated through the simplified path of travel to site, and ability to offload all material deliveries within the project limits of disturbance.

Material Storage and Laydown Areas

The construction will require careful planning and management of the daily occurrences within the site limits. The logistical plans currently outlined intend to keep all construction staging, lay down area and temporary storage within the project limits and secured by temporary fencing. Specified areas will be granted to on-site subcontractors for staging materials to assist in managing their installation. With designated areas delegated to subcontractors, the site will remain accessible by incoming trucks without causing a queuing effect outside of the fence.

Contractor Parking

At the peak of construction, Consigli anticipates that up to 30 people will be on site working various trades associated with the building. All contractors, subcontractors and their employees will be prohibited from parking in on-street City spaces in the vicinity of the site. To account for the anticipated parking demand, we have allowed space for 30 designated parking spaces for the personal vehicles of construction personnel, as well as additional overflow spaces to be utilized as necessary. All subcontractors will be educated during the bidding process of this requirement, language regarding off-street parking will be incorporated into each subcontract agreement, and individual employees will be informed of this requirement their first day on-site during the site safety orientation.

Fire Protection for Construction Activities

The 2013 Standard for Safeguarding Construction, Alteration and Demolition Operations will be enforced on this project by utilizing best management practices to mitigate the fire risks associated with construction. Consigli and its subcontractors will execute the following measures to provide a safe and secure work place:

1) PFD Fire Command Center: This centralized location will hold all current project information and will act as the first responders meeting point to obtain the most up to date information of construction. The following documents will be found at this location:
    a. Hot Work Permits: To be filled out daily by any person performing work that will generate a spark or create a potential fire risk on the job site. The permits are to be completed and approved by Consigli prior to work starting.
    b. Current Construction Schedule
    c. Current Construction Logistics Plan
    d. Pre-Incident Fire Plan

2) On-Site Fuel Storage: The use of different flammable liquids will be required throughout construction. A free-standing, 30-minute fire-rated enclosure will be built to safely and securely store all flammable liquids and gases. Fueling trucks will be used as needed but will not be allowed to stage or park on site for any extended period.

3) Means of Egress: The buildings will each be permanently equipped with 2-way stair assemblies for means of egress. These stairs will be utilized to provide emergency egress throughout construction and will be identified with temporary signage indicating the floor level and exit path direction.

4) Good Housekeeping: Consigli Construction will provide necessary dumpsters for the removal of debris from the site. All subcontractors are responsible for the daily clean-up of their work areas to ensure no materials or tools which could pose a hazard to the building are left out over night. Daily safety walks by the Construction Superintendent will be utilized to ensure that all working floors are equipped with an inspected fire extinguisher and clear means of egress in the event of an emergency. Trash chutes and/or material hoists may be utilized to safely and efficiently remove all debris from the project.

5) On-site Security: The project site will be secured everyday by means of a temporary post driven construction fence and scrim. Lockable gates will be located at (2) locations for site access.

6) Rapid Communication: Evacuation notification will be provided by means of 2-way radios/cellular devices as well as strategically positioned air horns. Upon evacuation of the building all project personnel will report to the muster point location where the Construction Manager and all subcontractor foremen will perform accountability checks. The General Contractor field staff will then be dispatched to all project entry points and the PFD Command Center. Upon arrival of the first responders to the PFD Command Center, the General Contractor will provide an accountability and incident briefing.

Public Safety

The construction will be near pedestrian right of ways and will interact with public traffic throughout the duration of the project. Material deliveries, the use of cranes, lifts, and other heavy machinery all have the potential to impact typical public activity. As a member of the Portland community, Consigli will strive to limit, mitigate and avoid these potential impacts as much as possible by means of controlling noise, on-site dust, vibrations and traffic. By educating and informing the neighborhoods to the construction activities taking place we will aim to build a project that produces minimal impacts to the Thames Street and Fore Street communities.

Noise

Construction activities throughout the project will create noise that leaves the project site. It is the intent of the project team to limit the exposure to the noise by following Section 17-18 of the City of Portland Code of Ordinances. This project site is located within 500 feet of buildings classified as residential. As such, the project hours will be limited the 7:00 am – 7:00 pm, Monday – Friday. Should any weekend or holiday work be required the use of heavy machinery will not commence before 8:00 am. When this work is required, no less than 2-week advanced notice will be provided to PFDC and the neighboring communities.

Work related to site preparation, foundations, and structural steel will likely be the loudest activity experienced during construction. This work will take place from April 2020 – December 2020. Recently, many local projects have utilized similar means of construction to much success around Portland.

Dust Control/Air Quality

Maintaining an environmentally conscious project site will be a major priority for the project team to ensure safety not only for the neighboring communities, but also for the construction workers on site day after day. All soils and debris will be kept within the project limits following the State of Maine Department of Environmental Protection erosion control Best Management Practices:

1) Erosion controlled construction entrances
2) Tarped dump trucks leaving the site with soil/debris
3) On-going sidewalk and street cleaning activities as necessary
4) The installation of temporary, compacted staging areas within the job site
5) Using wetting agents to control dust
6) Covering stock piles when material is to be piled for long periods of time
7) Smoking will not be allowed on the job site

Vibration Monitoring

Some construction practices required for this project will result in ground vibration waves that may transmit to nearby buildings. Prior to any potential vibration causing activities taking place a pre-construction survey will be conducted to review and document existing conditions of all adjacent structures. The survey will encompass all properties abutting the proposed project site to include the following addresses:

- 100 Fore Street (Currently Under Construction)
- 58 Fore Street (Fore Points Marina)
- 58 Fore Street (remaining buildings owned by PFDC)
- Adjacent Properties across Fore Street

Deep foundations and vibratory compaction will be employed on this project and will be monitored by a third-party monitoring company. A pre-construction meeting will be planned with abutting property owners to discuss geological conditions, construction specifications and methods of installation that create vibration.

Traffic Control

Throughout the construction process Franklin Street and Thames Street will experience increased traffic due to construction activities. Material deliveries, contractor access and public utility integration will be encountered and mitigated through coordinated logistics plans (provided within this CM Plan), on-site safety personnel, way-finding signage and well-organized traffic control devices. PFDC & Consigli will strive to inform and direct the neighborhood of the activities taking place in public areas as construction progresses through completion.

The main access point to the construction project will be through the private road accessed at the easternmost point of Thames Street. To maintain access for tenants of 58 Fore Street and two-way traffic on the private road, site flaggers will be utilized as needed to direct both construction and marina traffic.

Historical Preservation

Restoration and renovation of the Portland Company Historic District is a critical aspect to the development at 58 Fore Street. Detailed scopes of work will be developed and submitted for approval by the City's Historic Preservation Program Manager before work commences. These will include restoration of the original masonry facades, new windows to match the aesthetic of the originals, and supplementation of existing structure to preserve the original timber framing while bringing the buildings into compliance with current building code. Consigli will work closely with the design firms and PFDC to ensure existing site conditions are utilized during the planning of this work, and proper coordination is implemented during the construction phase to execute the design team's vision.

CONSIGLI

Est. 1905

Traffic Management Diagrams

58 FORE ST - BLOCK 2

CONSTRUCTION MANAGEMENT PLAN

07.15.2019

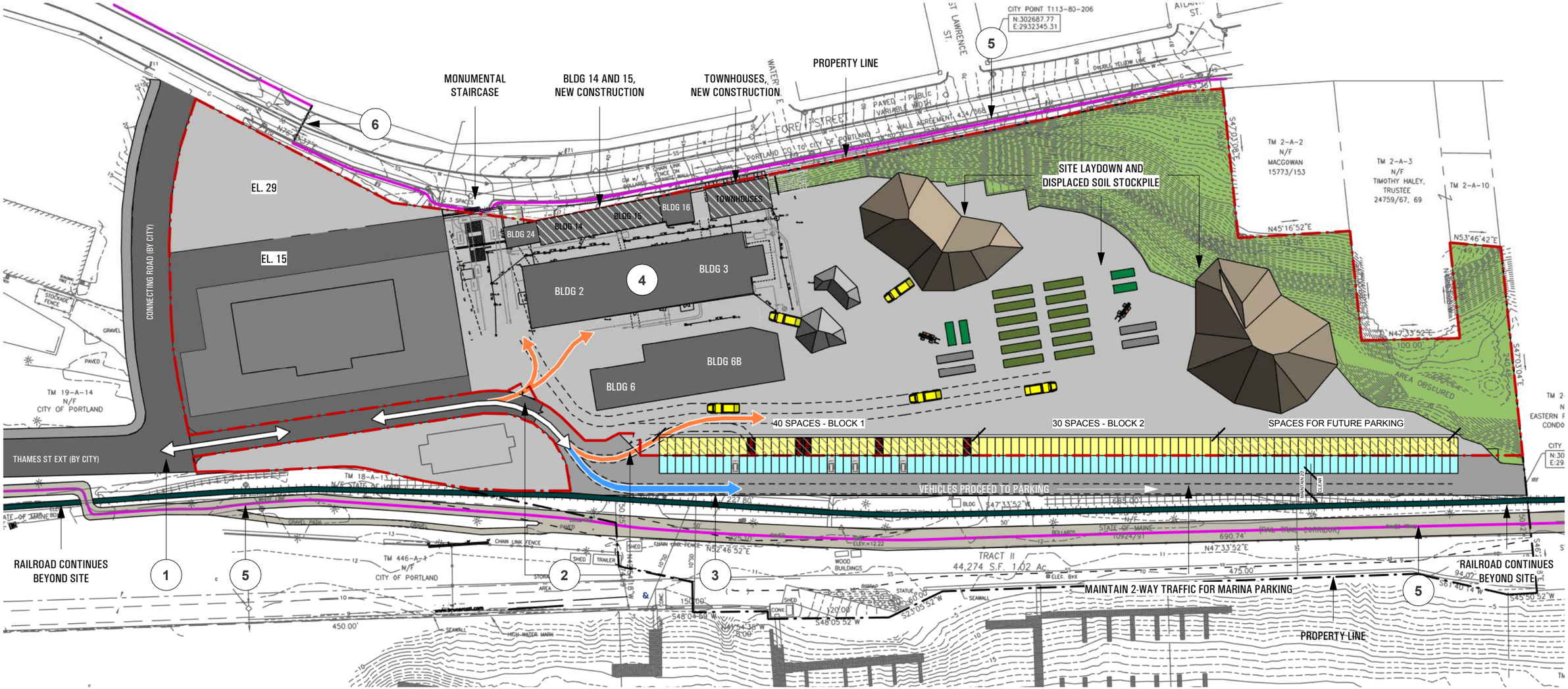

PLAN LEGEND

1. MARINA AND CONSTRUCTION ACCESS VIA THAMES ST EXT
2. MAINTAIN SEPARATE, SECURE ACCESS TO SITE(S)
3. ACCESS TO MARINA PARKING; NO CONSTRUCTION PARKING
4. CONSTRUCTION UNDERWAY AT BLOCK 2 SITE
5. MAINTAIN PEDESTRIAN ACCESS THROUGHOUT PHASE
6. PEDESTRIANS TO UTILIZE EXISTING CROSSWALK ON FORE ST

PARKING LEGEND

PARKING: MARINA - 100 SPACES

PARKING: CONSTRUCTION - 30 SPACES

GRAPHIC KEY

MARINA TRAFFIC

CONSTRUCTION TRAFFIC

SHARED TRAFFIC

CONSTRUCTION FENCING

PEDESTRIAN ACCESS

CONSIGLI Est. 1905

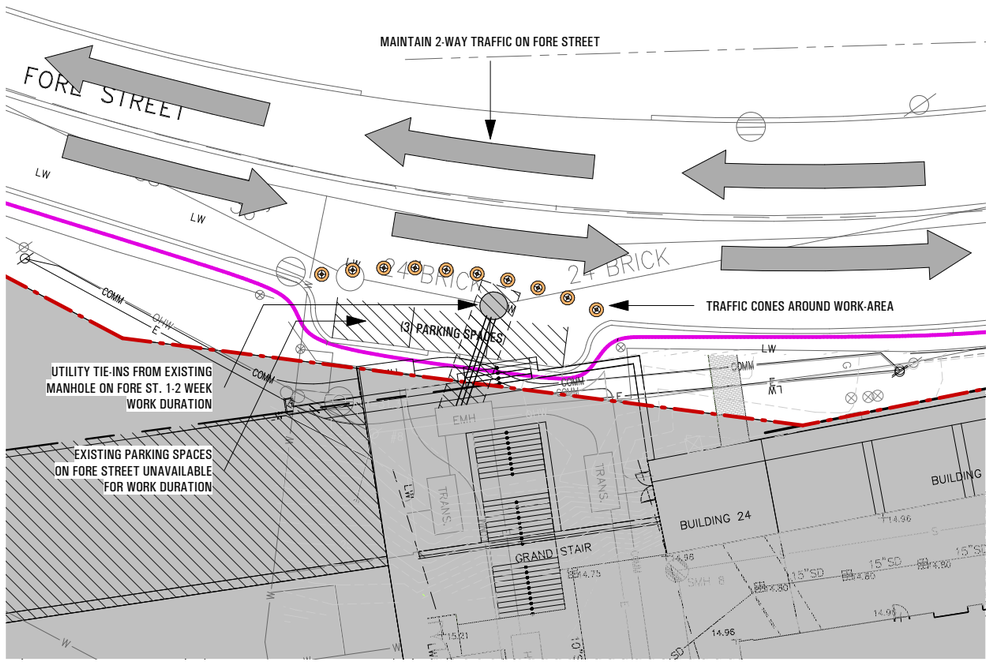

1 Utility Work on Fore St.
1/32" = 1'-0"

CONSIGLI Est. 1905

58 FORE ST -

CONSTRUCTION MANAGEMENT PLAN

Traffic Control Plan

06.19.2019

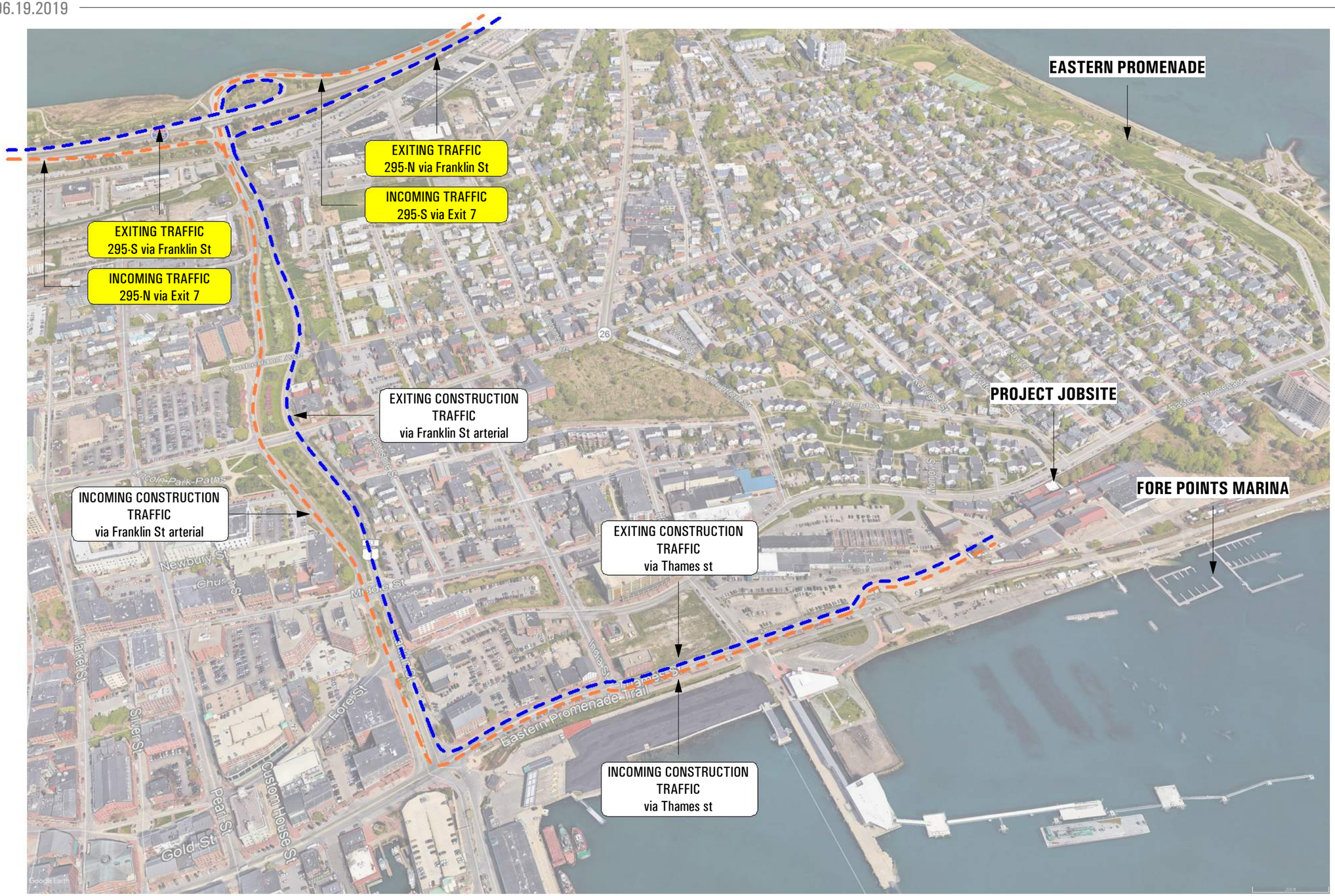

CONSIGLI
Est. 1905

November 6, 2019

CONSIGLI
Est. 1905

58 Fore Street – Waterfront Season 2

Construction Management Plan

Prepared For: Portland Department of Planning & Urban Development Department

Project Proponent: Portland Foreside Development Company LLC

Construction Manager: Consigli Construction Company Inc

Table of Contents

1. Construction Principles 2
2. Construction Administration and Communication 3
3. Construction Schedule 4
    a. Project Work Hours 4
    b. Project Schedule/Logistics 4
    c. Material Deliveries 4
    d. Material Storage and Laydown Areas 5
    e. Contractor Parking 5
4. Fire Protection for Construction Activities 6
5. Public Safety 8
    a. Noise 8
    b. Dust Control/Air Quality 8
    c. Vibration Monitoring 9
    d. Traffic Control 9
6. Traffic Management Plans 10
    a. Existing Conditions 11
    b. Construction Traffic Routing 12

CONSIGLI
Est. 1905

Construction Principles

The purpose of this Construction Management plan is to identify, mitigate and plan for all potential impacts throughout the duration of rebuilding the Waterfront at 58 Fore Street. Portland Foreside Development Co and Consigli Construction are committed to a seamless, incident free project by means of typical practices used to ensure that public safety and community are at the forefront of priorities.

Throughout this CM plan we will refer to specific examples of potential construction practices, traffic control scenarios, neighboring building considerations and public safety; as well as measures in which these items will be managed throughout the project to accommodate the community as much as possible. While we will take the necessary precautions to meet City and State requirements for traffic, noise, dust, vibration, etc., this project will be disruptive to adjacent properties compared to the current condition. Along with our subcontractor team members, it is imperative that we have complete participation from all parties affiliated with the project to maintain our strict safety requirements and ensure a quality building for PFDC.

The project at 58 Fore Street known as Waterfront Season 2 includes the re-construction and repairs to approximately 900 linear feet of relocation of the Maine Gauge Railroad and Eastern Promenade Trail. The completion of the project is anticipated for May 2021.

Consigli has extensively planned the project's schedule, site logistics and safety protocols that will be thoroughly covered in this report with graphics and narratives. This CM plan will continually be updated to meet the needs of the project, community and the city as the project progresses. We aim to deliver a safe and quality project to PFDC, their employees and the City of Portland by means of communication, teamwork and stewardship.

Construction Administration and Communication

Consigli Construction will be the Construction Manager on site throughout the duration of the project. As such, there will be a dedicated team of individuals tasked with managing quality, schedule, site logistics and safety. These personnel will manage and enforce the proposed CMP with all associated subcontractors and material vendors.

Larry Osmer – Senior Project Manager
617.719.9835, losmer@consigli.com

TBD – Project Manager

TBD – Project Superintendent

Site Communication

With the proximity to occupied buildings and pedestrian trails, community outreach and communication will be imperative throughout construction to keep the public informed of the expected turbulence caused by the project. Site signage will be prominently displayed to show pedestrian access around the site and any updates to the proposed CMP.

Quarterly reporting and updating of the CMP will be required to update the City and community of the following activities:

1) Construction schedule updates
2) Material deliveries, including notice of any oversized loads that may impact public traffic
3) Requests for upcoming off-hours work including weekends and holidays
4) Notice of any upcoming activities that may produce strong noise, vibration or dust that could adversely affect the neighboring communities.
5) Requests for any street openings or public sidewalk work to be completed as part of the construction contract

Construction Schedule

Project Work Hours

Construction work hours will be in accordance with Section 17-18 of the City of Portland Code of Ordinances.

The project site is located within zoning group B6 – Eastern Waterfront Mixed Zone but is within 500 feet of buildings used for residential purposes. As such, work hours will be limited to Monday – Friday 7:00 am – 7:00 pm. Should work extend into Weekends or Holidays, the use of heavy equipment will be kept within the time constraints of 8:00 am – 4:00 pm.

Project Schedule/Logistics

The project is anticipated to be approximately 5 months in duration. Beginning in October 2021 the project will be turned over to PFDC in May 2021.

Regarding scheduled work to take place within public streets and sidewalks, this work will comply with Section 25-129 – Noise, dust and debris of the City of Portland Code of Ordinances. This work will abut the Eastern Promenade Trail and Maine Gauge Railroad. Temporary barricades, fencing and signage will be required during the installation to control pedestrian and vehicular movements around the work.

Material Deliveries

The construction will require coordination of material deliveries throughout the duration of the project. The following logistical plans show the planned lay-down areas, truck routes and safety protocols that will be in place throughout the duration of construction.

1. All construction traffic will enter site through the Thames Street extension as the Fore Street Entry will be permanently closed, allowing construction vehicles to pull straight onto site without impacting the public right of way. Area will be provided within the limits of disturbance for construction vehicles to off load and turn around. The same route will be used for vehicles leaving the site.

Construction activities, whether it be work going in place or material and equipment deliveries, will create additional traffic along Thames Street. Impacts beyond the increased vehicle traffic will be mitigated through the simplified path of travel to site, and ability to offload all material deliveries within the project limits of disturbance.

Material Storage and Laydown Areas

The construction will require careful planning and management of the daily occurrences within the site limits. The logistical plans currently outlined intend to keep all construction staging, lay down area and temporary storage within the project limits and secured by temporary fencing. Specified areas will be granted to on-site subcontractors for staging materials to assist in managing their installation. With designated areas delegated to subcontractors, the site will remain accessible by incoming trucks without causing a queuing effect outside of the fence.

Contractor Parking

At the peak of construction, Consigli anticipates that up to 15 people will be on site working various trades associated with the project. All contractors, subcontractors and their employees will be prohibited from parking in on-street City spaces in the vicinity of the site. To account for the anticipated parking demand, we have allowed space for 25 designated parking spaces for the personal vehicles of construction personnel. All subcontractors will be educated during the bidding process of this requirement, language regarding off-street parking will be incorporated into each subcontract agreement, and individual employees will be informed of this requirement their first day on-site during the site safety orientation.

Fire Protection for Construction Activities

The 2013 Standard for Safeguarding Construction, Alteration and Demolition Operations will be enforced on this project by utilizing best management practices to mitigate the fire risks associated with construction. Consigli and its subcontractors will execute the following measures to provide a safe and secure work place:

1) PFD Fire Command Center within Consigli's Field Office: This centralized location will hold all current project information and will act as the first responders meeting point to obtain the most up to date information of construction. The following documents will be found at this location:
    a. Hot Work Permits: To be filled out daily by any person performing work that will generate a spark or create a potential fire risk on the job site. The permits are to be completed and approved by Consigli prior to work starting.
    b. Current Construction Schedule
    c. Current Construction Logistics Plan
    d. Pre-Incident Fire Plan

2) On-Site Fuel Storage: The use of different flammable liquids will be required throughout construction. A free-standing, 30-minute fire-rated enclosure will be built to safely and securely store all flammable liquids and gases. Fueling trucks will be used as needed, but will not be allowed to stage or park on site for any extended period.

3) Means of Egress: The project will be equipped with means of egress through the construction fencing. This work is open sitework and not within any buildings.

4) Good Housekeeping: Consigli Construction will provide necessary dumpsters for the removal of debris from the site. All subcontractors are responsible for the daily clean-up of their work areas to ensure no materials or tools which could pose a hazard to the building are left out over night. Daily safety walks by the Construction Superintendent will be utilized to ensure that the site is equipped with an inspected fire extinguisher and clear means of egress in the event of an emergency.

5) On-site Security: The project site will be secured everyday by means of a temporary post driven construction fence and scrim. Lockable gates will be located at (3) locations for site access.

6) Rapid Communication: Evacuation notification will be provided by means of 2-way radios/cellular devices as well as strategically positioned air horns. Upon evacuation of the project all project personnel will report to the muster point location where the

Construction Manager and all subcontractor foremen will perform accountability checks. The General Contractor field staff will then be dispatched to all project entry points and the PFD Command Center. Upon arrival of the first responders to the PFD Command Center, the General Contractor will provide an accountability and incident briefing.

Public Safety

The construction will be near pedestrian right of ways and will interact with public traffic throughout the duration of the project. Material deliveries, the use of cranes, lifts, and other heavy machinery all have the potential to impact typical public activity. As a member of the Portland community, Consigli will strive to limit, mitigate and avoid these potential impacts as much as possible by means of controlling noise, on-site dust, vibrations and traffic. By educating and informing the neighborhoods to the construction activities taking place we will aim to build a project that produces minimal impacts to the Thames Street and Fore Street communities.

Noise

Construction activities throughout the project will create noise that leaves the project site. It is the intent of the project team to limit the exposure to the noise by following Section 17-18 of the City of Portland Code of Ordinances. This project site is located within 500 feet of buildings classified as residential. As such, the project hours will be limited the 7:00 am – 7:00 pm, Monday – Friday. Should any weekend or holiday work be required the use of heavy machinery will not commence before 8:00 am. When this work is required, no less than 2-week advanced notice will be provided to PFDC and the neighboring communities.

Work related to the seawall improvements, foundations, and excavation activities will likely be the loudest activity experienced during construction. This work will take place from October 2021 – May 2021. Recently, many local projects have utilized similar means of construction to much success around Portland.

Dust Control/Air Quality

Maintaining an environmentally conscious project site will be a major priority for the project team to ensure safety not only for the neighboring communities, but also for the construction workers on site day after day. All soils and debris will be kept within the project limits following the State of Maine Department of Environmental Protection erosion control Best Management Practices:

1) Erosion controlled construction entrances
2) Tarped dump trucks leaving the site with soil/debris

3) On-going sidewalk and street cleaning activities
4) The installation of temporary, compacted staging areas within the job site
5) Using wetting agents to control dust
6) Covering stock piles when material is to be piled for long periods of time
7) Smoking will not be allowed on the job site

Vibration Monitoring

Some construction practices required for this project will result in ground vibration waves that may transmit to nearby buildings. Prior to any potential vibration causing activities taking place a third-party engineer will advise if this type of work is cause for concern to any nearby structures.

Site removals, vibratory compaction, and excavation improvements will be employed on this project and will be monitored by a third-party monitoring company. A pre-construction meeting will be planned with abutting property owners to discuss geological conditions, construction specifications and methods of installation that create vibration.

As an added measure of control, vibration monitoring may be performed at stone or masonry structures within 100' of the site compaction and ground improvements scope performed.

Traffic Control

Throughout the construction process Franklin Street and Thames Street will experience increased traffic due to construction activities. Material deliveries, contractor access and public utility integration will be encountered and mitigated through coordinated logistics plans (provided within this CM Plan), on-site safety personnel, way-finding signage and well-organized traffic control devices. PFDC & Consigli will strive to inform and direct the neighborhood of the activities taking place in public areas as construction progresses through completion.

The main access point to the construction project will be through the private road accessed at the easternmost point of Thames Street. In order to maintain access for tenants of 58 Fore Street and two-way traffic on the private road, site flaggers will be utilized as needed to direct both construction and marina traffic.

CONSIGLI

Est. 1905

Traffic Management Diagrams

58 FORE STREET - Waterfront Season 2

CMP

Current Conditions

07.31.2019

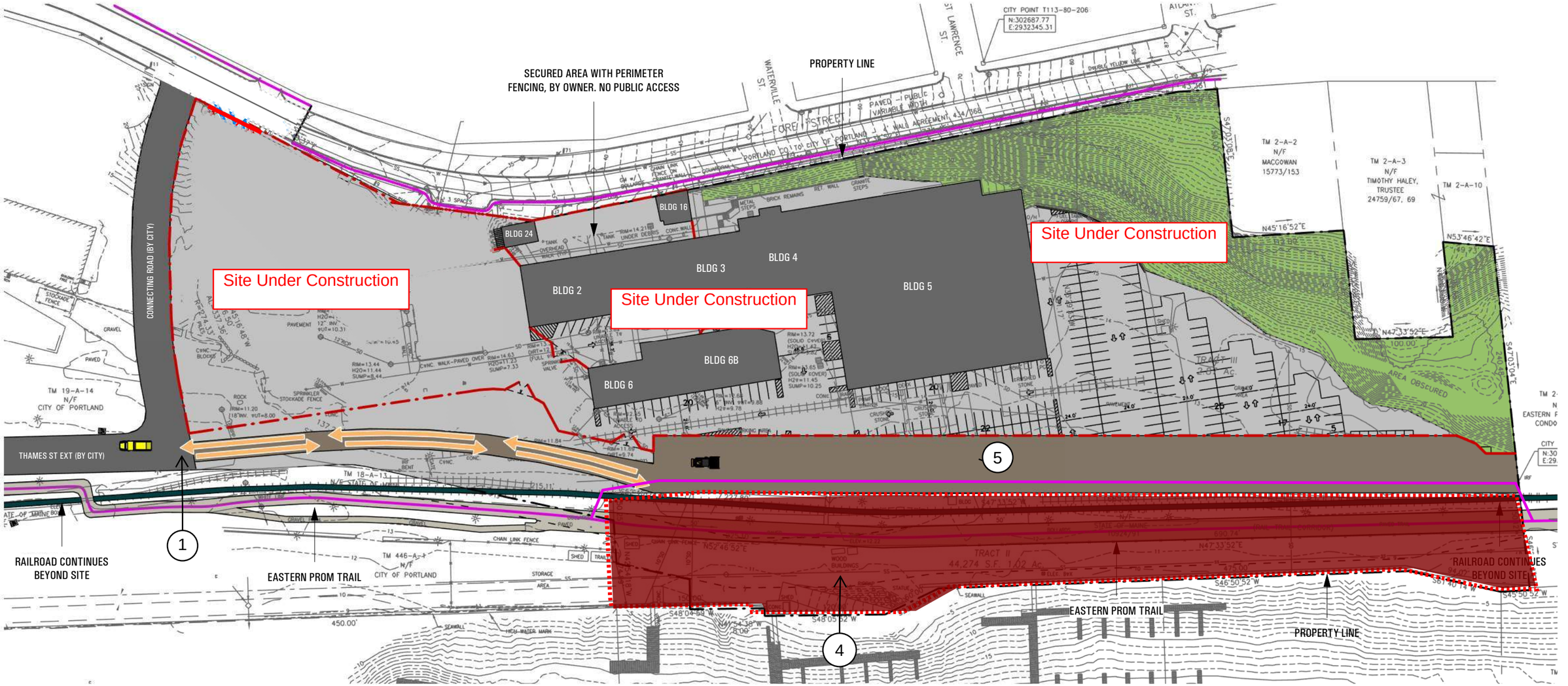

PLAN LEGEND

1. MARINA AND CONSTRUCTION ACCESS VIA THAMES ST EXT
2. MAINTAIN SEPARATE, SECURE ACCESS TO SITE(S)
3. ACCESS TO MARINA PARKING; & Construction Parking
4. Construction Work Zone
5. Construction Staging
6. Shared Parking

PARKING LEGEND

GRAPHIC KEY

MARINA TRAFFIC

CONSTRUCTION TRAFFIC

CONSTRUCTION FENCING

PEDESTRIAN ACCESS

CONSIGLI Est. 1905

58 FORE STREET - Waterfront Season 2

CMP

07.31.2019

Site Access & Work Zone

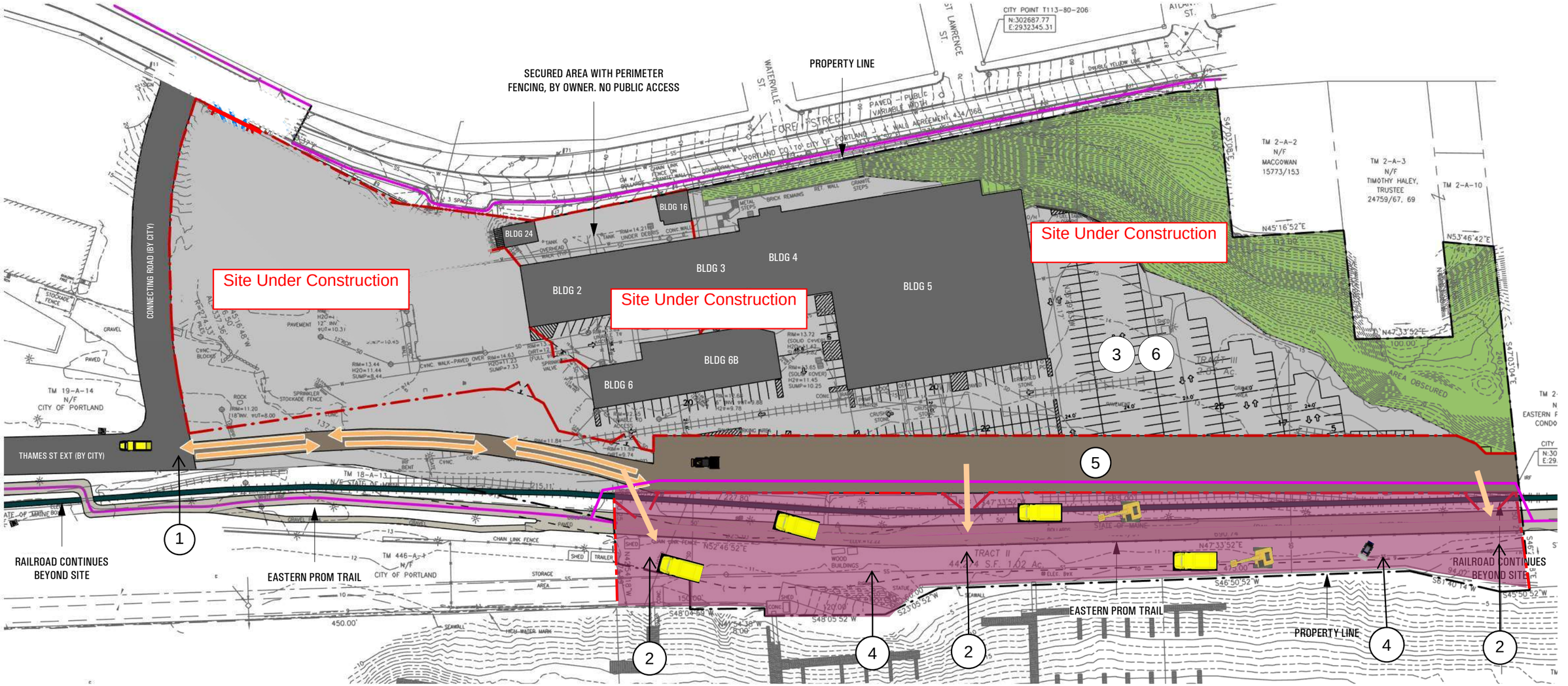

PLAN LEGEND

1. MARINA AND CONSTRUCTION ACCESS VIA THAMES ST EXT
2. MAINTAIN SEPARATE, SECURE ACCESS TO SITE(S)
3. ACCESS TO MARINA PARKING; & Construction Parking
4. Construction Work Zone
5. Construction Staging
6. Shared Parking

PARKING LEGEND

GRAPHIC KEY

MARINA TRAFFIC

CONSTRUCTION TRAFFIC

CONSTRUCTION FENCING

PEDESTRIAN ACCESS

CONSIGLI Est. 1905

November 6, 2019

CONSIGLI
Est. 1905

58 Fore Street – BLOCK 4
Construction Management Plan

Prepared For: Portland Department of Planning & Urban Development Department

Project Proponent: Portland Foreside Development Company LLC

Construction Manager: Consigli Construction Company Inc

Table of Contents

1. Construction Principles 2
2. Construction Administration and Communication 3
3. Construction Schedule 4
    a. Project Work Hours 4
    b. Project Schedule/Logistics 4
    c. Material Deliveries 4
    d. Material Storage and Laydown Areas 5
    e. Contractor Parking 5
4. Fire Protection for Construction Activities 6
5. Public Safety 8
    a. Noise 8
    b. Dust Control/Air Quality 8
    c. Vibration Monitoring 9
    d. Traffic Control 9
6. Traffic Management Plans 10
    a. Building Construction 10
    b. Utility Work at Fore Street 11
    c. Utility Work at New Connector Road 11
    d. Construction Traffic Routing 12

CONSIGLI
Est. 1905

Construction Principles

The purpose of this Construction Management plan is to identify, mitigate and plan for all potential impacts throughout the duration of building the Mixed-Use Development known as Block 4, at 58 Fore Street. Portland Foreside Development Co and Consigli Construction are committed to a seamless, incident free project by means of typical practices used to ensure that public safety and community are at the forefront of priorities.

Throughout this CM plan we will refer to specific examples of potential construction practices, traffic control scenarios, neighboring building considerations and public safety; as well as measures in which these items will be managed throughout the project to accommodate the community as much as possible. While we will take the necessary precautions to meet City and State requirements for traffic, noise, dust, vibration, etc., this project will be disruptive to adjacent properties compared to the current condition. Along with our subcontractor team members, it is imperative that we have complete participation from all parties affiliated with the project to maintain our strict safety requirements and ensure a quality building for PFDC.

The Mixed-Use Development at 58 Fore Street known as Building 1A includes the construction of a new 4 story building consisting of 218,000 SF of parking. The building will be primarily built out of precast concrete. The completion of the project is anticipated for August 2022.

Consigli has extensively planned the project's schedule, site logistics and safety protocols that will be thoroughly covered in this report with graphics and narratives. This CM plan will continually be updated to meet the needs of the project, community and the city as the project progresses. We aim to deliver a safe and quality project to PFDC, their employees and the City of Portland by means of communication, teamwork and stewardship.

Construction Administration and Communication

Consigli Construction will be the Construction Manager on site throughout the duration of the project. As such, there will be a dedicated team of individuals tasked with managing quality, schedule, site logistics and safety. These personnel will manage and enforce the proposed CMP with all associated subcontractors and material vendors.

Larry Osmer – Senior Project Manager
617.719.9835, losmer@consigli.com

Andy Miller – Project Manager
207.405.1288, amiller@consigli.com

Lee Follett – Project Superintendent
207.232.8919, lfollett@consigli.com

Site Communication

With the proximity to occupied buildings, community outreach and communication will be imperative throughout construction to keep the public informed of the expected turbulence caused by the project. Site signage will be prominently displayed to show pedestrian access around the site and any updates to the proposed CMP.

Quarterly reporting and updating of the CMP will be required to update the City and community of the following activities:

1) Construction schedule updates
2) Material deliveries, including notice of any oversized loads that may impact public traffic
3) Requests for upcoming off-hours work including weekends and holidays
4) Notice of any upcoming activities that may produce strong noise, vibration or dust that could adversely affect the neighboring communities.
5) Requests for any street openings or public sidewalk work to be completed as part of the construction contract

Construction Schedule

Project Work Hours

Construction work hours will be in accordance with Section 17-18 of the City of Portland Code of Ordinances.

The project site is located within zoning group B6 – Eastern Waterfront Mixed Zone but is within 500 feet of buildings used for residential purposes. As such, work hours will be limited to Monday – Friday 7:00 am – 7:00 pm. Should work extend into Weekends or Holidays, the use of heavy equipment will be kept within the time constraints of 8:00 am – 4:00 pm.

Project Schedule/Logistics

The project is anticipated to be approximately 10 months in duration. Beginning in June 2020 the project will be turned over to PFDC in August 2022.

Regarding scheduled work to take place within public streets and sidewalks, this work will comply with Section 25-129 – Noise, dust and debris of the City of Portland Code of Ordinances. The connection to public utilities and sidewalk construction will require work to be executed within Fore Street and the new connector road between Fore Street and the Thames Street Extension. This work will be scheduled and planned with the City of Portland prior to the execution, and all logistical concerns will be addressed prior to starting the work. The connection to public utilities is tentatively scheduled to happen in the Spring of 2020, with sidewalk construction tentatively scheduled to occur during the Fall of 2020. Temporary barricades, fencing and signage will be required during the installation to control pedestrian and vehicular movements around the work.

Material Deliveries

The construction will require coordination of material deliveries throughout the duration of the project. The following logistical plans show the planned lay-down areas, truck routes and safety protocols that will be in place throughout the duration of construction.

1. All construction traffic will enter site through the Thames Street extension, allowing construction vehicles to pull straight onto site without impacting the public right of way. Area will be provided within the limits of disturbance for construction vehicles to off load and turn around. The same route will be used for vehicles leaving the site. A flagger will be employed if needed during utility tie in work at Fore Street and the Connector Road, however these details will require additional coordination at a later date.

Construction activities, whether it be work going in place or material and equipment deliveries, will create additional traffic along Thames Street. Impacts beyond the increased vehicle traffic

will be mitigated through the simplified path of travel to site, and ability to offload all material deliveries within the project limits of disturbance.

Material Storage and Laydown Areas

The construction will require careful planning and management of the daily occurrences within the site limits. The logistical plans currently outlined intend to keep all construction staging, lay down area and temporary storage within the project limits and secured by temporary fencing. Specified areas will be granted to on-site subcontractors for staging materials to assist in managing their installation. With designated areas delegated to subcontractors, the site will remain accessible by incoming trucks without causing a queuing effect outside of the fence.

Contractor Parking

At the peak of construction, Consigli anticipates that up to 40 people will be on site working various trades associated with the building. All contractors, subcontractors and their employees will be prohibited from parking in on-street City spaces in the vicinity of the site. To account for the anticipated parking demand, we have allowed space for 40 designated parking spaces for the personal vehicles of construction personnel. All subcontractors will be educated during the bidding process of this requirement, language regarding off-street parking will be incorporated into each subcontract agreement, and individual employees will be informed of this requirement their first day on-site during the site safety orientation.

Fire Protection for Construction Activities

The 2013 Standard for Safeguarding Construction, Alteration and Demolition Operations will be enforced on this project by utilizing best management practices to mitigate the fire risks associated with construction. Consigli and its subcontractors will execute the following measures to provide a safe and secure work place:

1) PFD Fire Command Center: This centralized location will hold all current project information and will act as the first responders meeting point to obtain the most up to date information of construction. The following documents will be found at this location:
    a. Hot Work Permits: To be filled out daily by any person performing work that will generate a spark or create a potential fire risk on the job site. The permits are to be completed and approved by Consigli prior to work starting.
    b. Current Construction Schedule
    c. Current Construction Logistics Plan
    d. Pre-Incident Fire Plan

2) On-Site Fuel Storage: The use of different flammable liquids will be required throughout construction. A free-standing, 30-minute fire-rated enclosure will be built to safely and securely store all flammable liquids and gases. Fueling trucks will be used as needed, but will not be allowed to stage or park on site for any extended period.

3) Means of Egress: The building will be permanently equipped with (2) 2-way stair assemblies for means of egress. Permanent or temporary stairs will provide emergency egress throughout construction. This stair will be identified with temporary signage throughout construction indicating the floor level and exit path direction.

4) Good Housekeeping: Consigli Construction will provide necessary dumpsters for the removal of debris from the site. All subcontractors are responsible for the daily clean-up of their work areas to ensure no materials or tools which could pose a hazard to the building are left out over night. Daily safety walks by the Construction Superintendent will be utilized to ensure that all working floors are equipped with an inspected fire extinguisher and clear means of egress in the event of an emergency. Trash chutes and/or material hoists may be utilized to safely and efficiently remove all debris from the project.

5) On-site Security: The project site will be secured everyday by means of a temporary post driven construction fence and scrim. Lockable gates will be located at (3) locations for site access.

6) Rapid Communication: Evacuation notification will be provided by means of 2-way radios/cellular devices as well as strategically positioned air horns. Upon evacuation of the building all project personnel will report to the muster point location where the Construction Manager and all subcontractor foremen will perform accountability checks. The General Contractor field staff will then be dispatched to all project entry points and the PFD Command Center. Upon arrival of the first responders to the PFD Command Center, the General Contractor will provide an accountability and incident briefing.

Public Safety

The construction will be near pedestrian right of ways and will interact with public traffic throughout the duration of the project. Material deliveries, the use of cranes, lifts, and other heavy machinery all have the potential to impact typical public activity. As a member of the Portland community, Consigli will strive to limit, mitigate and avoid these potential impacts as much as possible by means of controlling noise, on-site dust, vibrations and traffic. By educating and informing the neighborhoods to the construction activities taking place we will aim to build a project that produces minimal impacts to the Thames Street and Fore Street communities.

Noise

Construction activities throughout the project will create noise that leaves the project site. It is the intent of the project team to limit the exposure to the noise by following Section 17-18 of the City of Portland Code of Ordinances. This project site is located within 500 feet of buildings classified as residential. As such, the project hours will be limited the 7:00 am – 7:00 pm, Monday – Friday. Should any weekend or holiday work be required the use of heavy machinery will not commence before 8:00 am. When this work is required, no less than 2-week advanced notice will be provided to PFDC and the neighboring communities.

Work related to the ground improvements, foundations, and precast will likely be the loudest activity experienced during construction. This work will take place from June 2020 – September 2022. Recently, many local projects have utilized similar means of construction to much success around Portland.

Dust Control/Air Quality

Maintaining an environmentally conscious project site will be a major priority for the project team to ensure safety not only for the neighboring communities, but also for the construction workers on site day after day. All soils and debris will be kept within the project limits following the State of Maine Department of Environmental Protection erosion control Best Management Practices:

1) Erosion controlled construction entrances
2) Tarped dump trucks leaving the site with soil/debris
3) On-going sidewalk and street cleaning activities
4) The installation of temporary, compacted staging areas within the job site
5) Using wetting agents to control dust
6) Covering stock piles when material is to be piled for long periods of time
7) Smoking will not be allowed on the job site

Vibration Monitoring

Some construction practices required for this project will result in ground vibration waves that may transmit to nearby buildings. Prior to any potential vibration causing activities taking place a pre-construction survey will be conducted to review and document existing conditions of all adjacent structures.

Site removals, vibratory compaction, and ground improvements will be employed on this project and will be monitored by a third-party monitoring company. A pre-construction meeting will be planned with abutting property owners to discuss geological conditions, construction specifications and methods of installation that create vibration.

As an added measure of control, vibration monitoring may be performed at stone or masonry structures within 100' of the site compaction and ground improvements scope performed.

Traffic Control

Throughout the construction process Franklin Street and Thames Street will experience increased traffic due to construction activities. Material deliveries, contractor access and public utility integration will be encountered and mitigated through coordinated logistics plans (provided within this CM Plan), on-site safety personnel, way-finding signage and well-organized traffic control devices. PFDC & Consigli will strive to inform and direct the neighborhood of the activities taking place in public areas as construction progresses through completion. There is planned work along the Fore Street retaining wall that is still in the design phase. Pedestrian access and traffic control will be evaluated upn completion of the design.

The main access point to the construction project will be through the private road accessed at the easternmost point of Thames Street. In order to maintain access for tenants of 58 Fore Street and two-way traffic on the private road, site flaggers will be utilized as needed to direct both construction and marina traffic.

CONSIGLI

Est. 1905

Traffic Management Diagrams

58 FORE ST - BLOCK 4

CMP | Site Access & Work Zone

07.15.2019

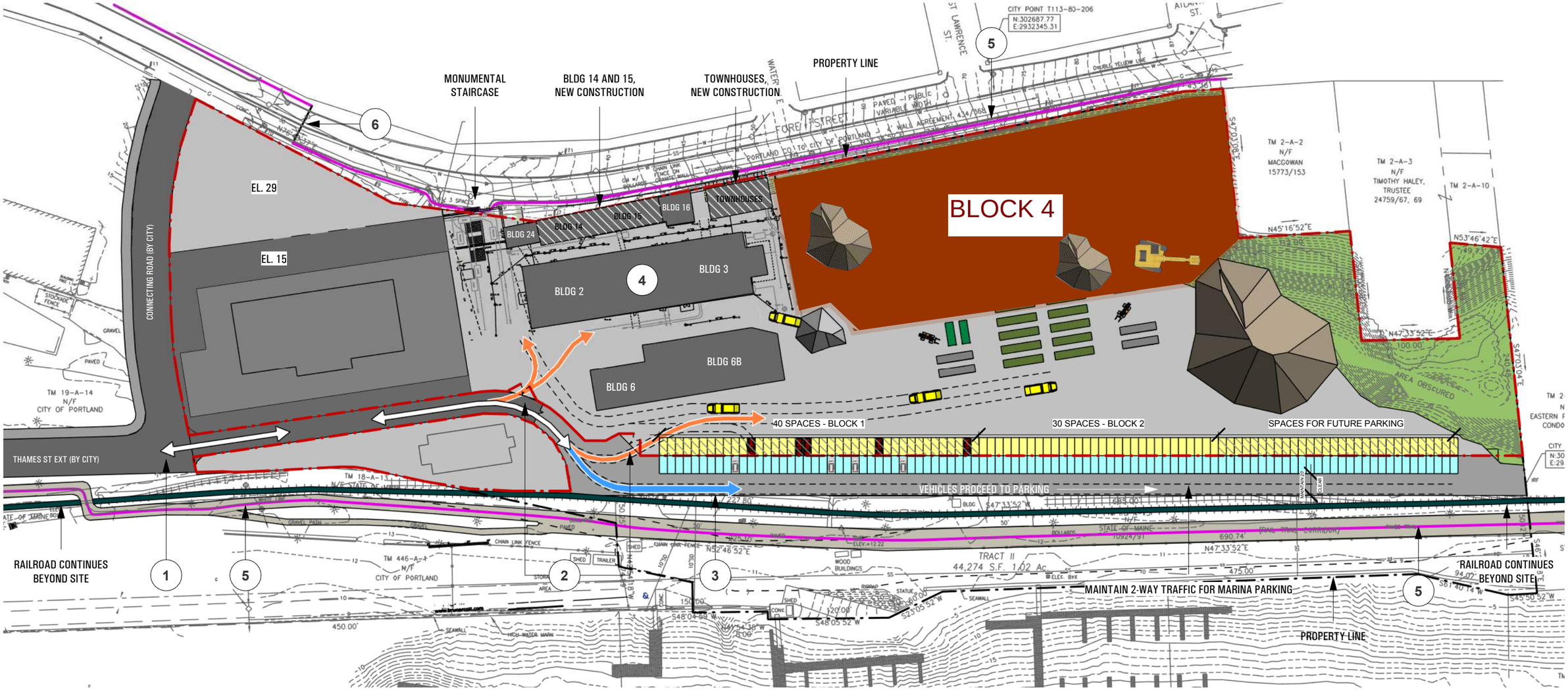

PLAN LEGEND

1. MARINA AND CONSTRUCTION ACCESS VIA THAMES ST EXT
2. MAINTAIN SEPARATE, SECURE ACCESS TO SITE(S)
3. ACCESS TO MARINA PARKING; NO CONSTRUCTION PARKING
4. CONSTRUCTION UNDERWAY AT BLOCK 2 SITE
5. MAINTAIN PEDESTRIAN ACCESS THROUGHOUT PHASE
6. PEDESTRIANS TO UTILIZE EXISTING CROSSWALK ON FORE ST

PARKING LEGEND

GRAPHIC KEY

- MARINA TRAFFIC
- CONSTRUCTION TRAFFIC
- SHARED TRAFFIC
- CONSTRUCTION FENCING
- PEDESTRIAN ACCESS

CONSIGLI Est. 1905

CONSIGLI

Est. 1905

End of Construction Management Plan

42x30 SHEET
1:1

R6
B6

ASPHALT PAVING, SEE CIVIL DWGS

FORE CONNECTOR

CONNECT TO EXISTING SIDEWALK

L.O.W.

PLANTING AREA

1 L1.20 STAIR LAYOUT & MATERIALS PLAN

BUILDING 1A ROOF. SEE ARCH DRAWINGS FOR TEMPORARY ROOFTOP FINISH

8 LD1.0 STEEL EDGING PINNED TO CONCRETE

6 LD1.0 LIGHT DUTY STONE PAVING OVER CONCRETE SLAB

CONNECT TO EXISTING SIDEWALK

BUILDING 1A

4 LD2.0 METAL BOLLARD ILLUMINATED, SEE L5.00

4 LD1.0 EDGE – PAVING TO PLANTING TYP.

2 LD2.0 LITTER/RECYCLING RECEPTACLE, TYP.

1 LD2.0 BENCH TYPE B, TYP.

4 LD2.0 METAL BOLLARD, TYP.

L.O.W.

27'-1"

48'-4"

44'

31'

22'

62'-1"

32'-11"

28'

ALIGN

(2) DROP-OFF PARKING SPACES
(7) PARKING SPACES

22' TYP.

20'

STONE INLAY CROSSWALK

CL

B6
EWPZ

4 LD1.0 EDGE, PAVING TO PLANTING, TYP.

EXISTING TRAIL

CONNECT TO EXISTING TRAIL

RELOCATED NARROW GAUGE RAIL

EASTERN PROMENADE TRAIL

5 LD1.0 GRANITE CURB AT PLANTING, TYP.

2 LD2.0 LITTER/RECYCLING RECEPTACLE, TYP.

3 LD2.0 METAL BIKE RACK

TRAIN TRACK INLAY

2 LD1.0 HEAVY-DUTY STONE PAVING

5 LD2.0 MONOLITHIC GRANITE BENCH

HYDRANT, SEE CIVIL

TRASH

BUILDING 12

2 LD1.0 HEAVY DUTY STONE PAVING

ELEVATED TERRACE

FUEL TANK VENT PIPES RELOCATED AND ENCLOSED IN PERFORATED METAL ILLUMINATED SIGN, APPROXIMATE LOCATION SHOWN

5 LD2.0 MONOLITHIC GRANITE BENCH, TYP.

BUILDING 1 MEMORY PAVING INLAY

3 LD2.0 METAL BIKE RACK

RECLAIMED GRANITE SLAB

POLE LIGHT, TYP. SEE L5.00

6 LD2.0 STONE BOLLARD

ASPHALT PAVEMENT, SEE CIVIL

2 LD2.0 LITTER/RECYC. RECEPTACLE, TYP.

1 LD2.0 BENCH TYPE A, TYP.

5 LD2.0 MONOLITHIC GRANITE BENCH

7 LD1.0 BRICK SIDEWALK

1 LD1.0 LIGHT DUTY STONE PAVING

PARKING GARAGE ACCESS, SEE ARCH.

FENCE 3

FORE STREET

FENCE 5

BUILDING 24

BUILDING 14

BUILDING 15

BUILDING 16

TOWNHOUSES

BLOCK 4

BUILDINGS 2 & 3

RECLAIMED GRANITE SLAB

RELOCATED HISTORIC WATER TANK AND BOILER

3 LD2.0 BIKE RACKS

BUILDING 6

BUILDING 6B

2 LD1.0 HEAVY-DUTY STONE PAVING

2 LD2.0 LITTER/RECYC. RECEPTACLE, TYP.

HYDRANT

FENCE 1

2 LD1.0 HEAVY DUTY STONE PAVING

4 LD2.0 METAL BOLLARD, NON-ILLUMINATED, TYP.

POLE LIGHT, TYP. SEE L5.00

ASPHALT PAVEMENT

FENCE 1

NEW SEAWALL, BY OTHERS

15'

MATCHLINE – SEE SHEET L1.10

MATCHLINE – SEE SHEET L1.10

S48°08'59"W

450.00'

20' 0 20' 40'
BAR SCALE
1" = 20'
CHECK PRINT TO SET PROPER VIEW

NOT FOR CONSTRUCTION

PLANSDLV_CAD\Plotsets\19101 SITE PLAN\08 FORE STREET DPS-12.00 LAYOUT MATERIALS PLAN.dwg, Nov 08, 2019 - 4:40pm

WOODARD & CURRAN
41 Hutchins Drive
Portland, Maine 04102
800.426.4262 | www.woodardcurran.com
COMMITMENT & INTEGRITY DRIVE RESULTS

THIS DOCUMENT IS THE PROPERTY OF WOODARD & CURRAN INC. AND ITS CLIENT AND SHALL NOT BE REPRODUCED OR USED FOR ANY PURPOSE WITHOUT THE EXPRESS WRITTEN CONSENT OF WOODARD & CURRAN INC.

mbla inc
michael boucher landscape architecture
457 US Route 1 Suite 2
Freeport, ME 04032
t. 207.865.1080
f. 207.865.1455
www.boucherlandscape.com

©copyright 2019

REV	DESCRIPTION	DATE
1	08 DEC 2019 PC-1 SUBMISSION	

REV	DESCRIPTION	DRAWN BY	CHECKED BY

SITE LAYOUT & MATERIALS PLAN

PORTLAND FORESIDE DEVELOPMENT CO.
PORTLAND, ME 04102

PHASE 1 SITE PLAN SUBMISSION

JOB NO.: 0227007
DATE: NOVEMBER 8, 2019
SCALE: 1"=20'
SHEET: OF

L1.00

SITE FURNISHINGS SCHEDULE

SYM.		QTY.	NAME	COMPANY	SIZE	NOTES
FENCING						
--		491 LF	FENCE 1	--		WOOD FENCE, HORIZ. SLAT, PAINTED WHITE
--		176 LF	FENCE 2	AMERISTAR		IMPASSE II, GAUNTLET STYLE
--		386 LF	FENCE 3	--	6' H	CHAINLINK FENCE
--		293 LF	FENCE 4	--		CHAINLINK CONSTRUCTION FENCE, SEE CONSTRUCTION MANAGEMENT PLAN
--		170 LF	FENCE 5	--		MOUNTED ON MASONRY WALL, SEE BRUNER COTT
RECEPTACLES						
--		10	SELECT RECYCLING SYSTEM	LANDSCAPE FORMS		DOUBLE UNIT (TRASH, RECYCLE)
BIKE RACKS						
--		12	LOTLIMIT, MMCITE.COM	--		GALVANIZED METAL FINISH
BENCHES						
--		7	RECLAIMED MONOLITHIC GRANITE BENCH	--	2' X 6'	
--		5	RECLAIMED MONOLITHIC GRANITE BENCH	--	2' X 10'	
--		1	RECLAIMED MONOLITHIC GRANITE BENCH	--	2.5' X 14'	
--		1	RECLAIMED MONOLITHIC GRANITE BENCH	--	3' X 15'	
--		8	BACKED BENCH	LANDSCAPE FORMS	28" X 70"	FGP BENCH BACKED
--		3	BACKLESS BENCH	LANDSCAPE FORMS	23" X 70"	FGP BENCH BACKLESS

ZONE LINE R6 B6
MATCHLINE – SEE SHEET L1.00
PARKING GARAGE ACCESS SEE ARCH.
FENCE 3
BLOCK 4 PARKING GARAGE
BLOCK 4
B6 R6
B6
R6 B6
L.O.W.
GARAGE ENTRANCE/EXIT
ASPHALT PAVEMENT (SEE CIVIL DWGS.)
FENCE 4
FENCE 4
SEE CIVIL DWGS FOR TRACK CROSSING DETAIL
FENCE 1 GATES
SEE CIVIL DWGS. FOR MNGRR DETAILS
ASPHALT PAVEMENT (SEE CIVIL DWGS.)
FENCE 1
3 LD1.0 STONEDUST
8 LD1.0 STEEL EDGING
3 LD1.0 STONEDUST
FENCE 2
B6 EWPZ
FENCE 1
NEW SEAWALL, BY OTHERS
MATCHLINE – SEE SHEET L1.00
RELOCATED NARROW GAUGE RAIL
RELOCATED EASTERN PROMENADE PATH
PLANTING AREA
BOAT CREW RECREATION AREA
(2)YOT Heads YG7(poles)
MDOT R.O.W. 50'-0"
APPROX LOCATION
UTES
-20' 0 20' 40'
BAR SCALE
1" = 20'
CHECK GRAPHIC SCALE BEFORE USING
NOT FOR CONSTRUCTION

WOODARD & CURRAN
41 Hutchins Drive
Portland, Maine 04102
800.426.4262 | www.woodardcurran.com
COMMITMENT & INTEGRITY DRIVE RESULTS

THIS DOCUMENT IS THE PROPERTY OF WOODARD & CURRAN INC. AND ITS CLIENT AND SHALL NOT BE REPRODUCED OR TRANSFERRED TO ANY PERSON OR ENTITY OTHER THAN THE CLIENT FOR WHOM IT WAS PREPARED, AND FOR THE SPECIFIC PROJECT FOR WHICH IT WAS PREPARED, WITHOUT THE PRIOR WRITTEN CONSENT OF WOODARD & CURRAN INC.

mbla inc
michael boucher landscape architecture
457 US Route 1 Suite 2
Freeport, ME 04032
t. 207.865.1080
f. 207.865.1455
www.boucherlandscape.com
©copyright 2019

REV	DESCRIPTION	DATE
1	08.30.19 PER CITY REVIEW	

DESIGNED BY:
CHECKED BY:

REV	DESCRIPTION	DATE

DRAWN BY:
DESIGNED BY:

SITE LAYOUT & MATERIALS PLAN

PORTLAND FORESIDE
DEVELOPMENT CO.
PORTLAND, ME 04102

PHASE 1 SITE PLAN SUBMISSION

JOB NO.: 0227007
DATE: NOVEMBER 8, 2019
SCALE: 1"=20'
SHEET: OF

L1.10

P:\PDC\1 CAD\Worksheets\19101 SITE PLAN\08 FORE STREET SPS=2.00 LAYOUT MATERIALS PLAN.dwg, Nov 08, 2019 - 4:28pm

41 Hutchins Drive
Portland, Maine 04102
800.426.4262 | www.woodardcurran.com
COMMITMENT & INTEGRITY DRIVE RESULTS

THIS DOCUMENT IS THE PROPERTY OF WOODARD & CURRAN INC. AND ITS CLIENT AND SHALL NOT BE REPRODUCED OR TRANSFERRED TO ANY PERSON OR ENTITY FOR ANY PURPOSE WHATSOEVER WITHOUT THE EXPRESS WRITTEN PERMISSION OF WOODARD & CURRAN INC.

LANDSCAPE ARCHITECT
Michael Boucher
457 US Route 1 Suite 2
Freeport, Maine
t 207.865.1080

REV	DESCRIPTION	DATE
	18 CMC SHEET PKG SUBMITTAL	
	CHECKED BY: DLC	

REV	DESCRIPTION	DATE
	DRAWN BY: BDM	
	DESIGNED BY: BDM	

VEHICLE DROP OFF

FORE STREET

36"

24"BRICK

24"BRICK

PLASTIC

GV

W

35

CH EXISTING SIDEWALK

GRANITE CURB TO MATCH EXISTING

3 LD1.1 BIKE RACK

1 LD3.1 STONE STAIRS

7 LD1.0 BRICK PAVING

6 LD4.0 TREE RING IN STONE PAVEMENT

1 LD1.1 BENCH A, TYP.

L3.0 1

FLUSH

MATCH EXISTING SIDEWALK

EDGE OF BUILDING BELOW

4" WIDE TRENCH DRAIN

2 LD1.1 LITTER/ RECYCLING RECEPATCLE

EDGE OF BUILDING BELOW

6 LD1.0 STONE VENEER RETAINING WALL

6 LD1.0 STONE PAVING

8 LD1.0 STEEL RESTRAINT EDGING

TEMPORARY CONDITION T.B.D.

ELECTRICAL TRANSFORMER BELOW IN VAULT

EDGE OF BUILDING BELOW

1 LD1.1 BENCH B, TYP.

2 LD3.1 CUSTOM STAINLESS STEEL GUARDRAIL

3–4 LD3.1 CUSTOM STAINLESS STEEL HANDRAIL

2 LD3.1 CUSTOM STAINLESS STEEL GUARDRAIL

5–7 LD3.1 RECYCLED CURB VENEER WALL ELEVATION DETAIL

1 LD3.1 STONE STAIRS

SEE STAIR GRADING PLAN L2.2

PLANTING AREA

BLDG. 24

FLUSH

FLUSH

FLUSH

ALIGN

ALIGN

PLANTING AREA

L3.0 2

BUILDING 1A

2 LD3.1 CUSTOM STAINLESS STEEL GUARDRAIL

4 LD1.0 EDGE – PAVING TO PLANTING TYP.

TRANSFORMER VAULT

5 LD2.0 MONOLITHIC GRANITE BENCH

4 LD1.0 EDGE – PAVING TO PLANTING TYP.

L3.0 1

PLANTING AREA

SITE PLAN

PORTLAND FORESIDE
DEVELOPMENT CO.
PORTLAND, ME 04102

BUILDING 1A, BUILDING 12 &
SHARED STREET & BLOCK 2

JOB NO.: 0227007
DATE: NOVEMBER 8, 2019
SCALE: 1/4"=1'-0"
SHEET: OF

L1.20

NOT FOR CONSTRUCTION

P:\PTDC\1_CAD\Plotsheets\19101 SITE PLAN\58 FORE STREET SPS-L2.00 LAYOUT MATERIALS PLAN.dwg, Nov 08, 2019 - 4:38pm

42x30 SHEET
1:1

R6
B6

FORE CONNECTOR

FORE STREET

MATCHLINE – SEE SHEET L4.10

5 LD4.0 PAVEMENT SUPPORT

CT 1

CS 1

LAWN

BUILDING 24

BUILDING 14

BUILDING 15

BUILDING 16

TOWNHOUSES

BLOCK 4

BG 1

5 LD4.0 PAVEMENT SUPPORT APPROX. EXTENTS

6 LD4.0 TREE RING TYP. ALL TREES IN PAVEMENT

BUILDINGS 2 & 3

BUILDING 6

BUILDING 6B

QR 6

NOTE: PLANT SCHEDULE CAN BE FOUND ON SHEET L4.10

BUILDING 1A

2 LD4.0 STREET TREE PLANTING

LT 4

RA 78

LS 1 RA 30

AR 3 RA 68

QP 1 RA 33

GT 1 RA 20

RA 54

QP 1 RA 32

BUILDING 12

B6
EWPZ

MP 10

CA 11

CA 10

FT 1625

RT 31

CA 19

CA 11 IV 3

GRAVEL PATH

GRAVEL

CHAIN LINK FENCE

SHED

TRAILER

STORAGE AREA

SALT TOLERANT GRASS SEED MIX

SALT TOLERANT GRASS SEED MIX

MATCHLINE – SEE SHEET L4.10

8"PVC

GUARDRAIL

450.00'

NOT FOR CONSTRUCTION

20' 0 20' 40'

BAR SCALE

CHECK GRAPHIC SCALE BEFORE USING

P:\PTDCLV_CAD\Plotsheets\101 SITE PLAN\05 FORE STREET-L4.00 PLANTING PLAN.dwg, Nov 08, 2019 - 4:20pm

WOODARD & CURRAN
41 Hutchins Drive
Portland, Maine 04102
800.426.4262 | www.woodardcurran.com

COMMITMENT & INTEGRITY DRIVE RESULTS

THIS DOCUMENT IS THE PROPERTY OF WOODARD & CURRAN INC. AND ITS CLIENT AND SHALL NOT BE REPRODUCED OR USED FOR ANY PURPOSE WITHOUT THE EXPRESS WRITTEN CONSENT OF WOODARD & CURRAN INC.

mbla inc
michael boucher landscape architecture
457 US Route 1 Suite 2
Freeport, ME 04032
t. 207.865.1080
f. 207.865.1455
www.boucherlandscape.com

©copyright 2019

REV	DESCRIPTION	DATE
1	08 SPEC-L4.00 PLANS	

REV	DESCRIPTION	DATE

DESIGNED BY:
DRAWN BY:
CHECKED BY:

SITE PLANTING PLAN

PORTLAND FORESIDE DEVELOPMENT CO.
PORTLAND, ME 04102

PHASE 1 SITE PLAN SUBMISSION

JOB NO.: 0227007
DATE: NOVEMBER 8, 2019
SCALE: 1"=20'
SHEET: OF

L4.00

PLANT LIST

SYM	QTY.	BOTANICAL NAME	COMMON NAME	SIZE	ROOT	SPACING	COMMENTS
TREES – DECIDUOUS							
AR	6	ACER RUBRUM 'KARPICK'	RED SUNSET RED MAPLE	4–5" CAL.	B+B	PER PLAN	
AC	1	AMELANCHIER CANADENSIS	SERVICEBERRY	7–8' HT	B+B	PER PLAN	
BG	1	BETULA POPULIFOLIA	GRAY BIRCH	4–5" CAL.	B+B	PER PLAN	
BP	1	BETULA PAPYRIFERA	PAPER BIRCH	4–5" CAL.	B+B	PER PLAN	
CS	5	CRATAEGUS SP.	HAWTHORN	4–5" CAL.	B+B	PER PLAN	
GT	2	GLEDITSIA TRIACANTHOS VAR. INERMIS	THORNLESS HONEYLOCUST	4–5" CAL.	B+B	PER PLAN	
LS	1	LIQUIDAMBAR STYRACIFLUA	AMERICAN SWEETGUM	4–5" CAL.	B+B	PER PLAN	
LT	4	LIRIODENDRON TULIPIFERA	TULIP POPLAR	4–5" CAL.	B+B	PER PLAN	
QP	2	QUERCUS PALUSTRIS	PIN OAK	4–5" CAL.	B+B	PER PLAN	
QR	6	QUERCUS RUBRA	RED OAK	4–5" CAL.	B+B	PER PLAN	
RT	60	RHUS TYPHINA	STAGHORN SUMAC				
SHRUBS, PERENNIALS, GROUNDCOVERS							
CA	51	CLETHRA ALNIFOLIA	SWEET PEPPERBUSH	3 GAL			
	1625 SF	FESTUCA RUBRA	CREEPING RED FESCUE	SEED			3–4 LBS/1000 SF
	315	RHUS AROMATICA 'GRO–LOW'	GRO–LOW FRAGRANT SUMAC	2 GAL		30" O.C.	
	220	DENNSTAEDTIA PUNCTILOBULA	HAY–SCENTED FERN	1 GAL			
IV	6	ILEX VERTICILLATA	WINTERBERRY	3 GAL			
MP	22	MYRICA PENSYLVANICA	NORTHERN BAYBERRY	3 GAL			
	24,460 SF		LAWN	SOD			
	13,752 SF	SALT TOLERANT GRASS SEED MIX	SALT TOLERANT GRASS SEED MIX	SEED			REPRESENTATIVE SPECIES: ANDROPGON GERARDII, CALAMAGROSTIS CANADENSIS, HORDEUM JUBATUM, PANICUM VIRGATUM, SCHIZACHYRIUM SCOPARIUM, BOUTELOUA CURTIPENDULA

PLANTING NOTES:

1. SEE SHEET LD2.0 FOR PLANTING DETAILS
2. ALL PLANTS TO BE SELECTED AND SEALED IN THE FIELD BY THE LANDSCAPE ARCHITECT.
3. FINAL LOCATION OF ALL PLANTS TO BE DETERMINED IN THE FIELD BY THE LANDSCAPE ARCHITECT.
4. ALL PLANTING AREAS TO RECEIVE 3" LAYER OF DOUBLE SHREDDED HARDWOOD BARK MULCH.
5. PLANTS SHALL BEAR SAME RELATIONSHIP TO FINISHED GRADE AS THEY BORE TO EXISTING GRADE IN THE NURSERY.
6. CUT AND REMOVE BURLAP FROM TOP 1/3 OF ROOT BALL. NYLON ROPE AND/OR NYLON BALLING MATERIAL IS NOT ACCEPTABLE.
7. LOCATE GUY WIRES SO THAT THEY WILL NOT PULL TREE CROTCH APART.
8. UPON COMPLETION OF THE ONE (1) YEAR PLANT GUARANTEE PERIOD THE LANDSCAPE CONTRACTOR IS RESPONSIBLE FOR ADJUSTING OR REMOVING ALL STAKES. THIS SHALL BE DONE IN CONSULTATION WITH THE LANDSCAPE ARCHITECT. ALL STAKES REMAINING SHALL THEN BECOME THE RESPONSIBILITY OF THE OWNER.
9. IF THERE IS A DISCREPANCY BETWEEN THE PLANT COUNT SHOWN IN THE PLANT LIST AND THE PLANTING GRAPHIC, THE GRAPHIC SHALL TAKE PRECEDENCE.
10. IF THE CONTRACTOR DETERMINES THE SUBGRADE SOIL CONDITIONS ARE DELETERIOUS TO PLANT GROWTH OR WILL INHIBIT DRAINAGE, THE LANDSCAPE ARCHITECT SHALL BE NOTIFIED IMMEDIATELY AND PRIOR TO INSTALLATION OF PLANT MATERIAL.
11. ALL TRANSPLANTED SHRUBS SHALL BE 'HEELED IN' OR HEAVILY MULCHED IN A SHADED AREA AND WATERED AS NECESSARY UNTIL THEY CAN BE PLANTED.
12. TOPSOIL AND SEED ALL AREAS DISTURBED AS A RESULT OF ANY AND ALL DISTURBANCES, CONSTRUCTION, OR STORAGE OF EQUIPMENT WHETHER SUCH AREAS ARE SHOWN ON THE PLANS OR NOT. CONTRACTOR TO FIELD VERIFY AREAS OF SEED PRIOR TO SUBMITTING A BID.
13. COMPLY WITH APPLICABLE REQUIREMENTS OF AMERICAN STANDARD FOR NURSERY STOCK, 2014 (ANSI Z60.1, PUBLISHED BY AMERICAN HORTICULTURE INDUSTRY ASSOCIATION D/B/A AMERICANHORT).

IRRIGATION NOTES:

IRRIGATION CONSULTANT TO PROVIDE SKETCH OF AN AUTOMATED, WEATHER–BASED IRRIGATION SYSTEM FOR LANDSCAPE ARCHITECT APPROVAL. THE SYSTEM SHOULD INCLUDE THE FOLLOWING:

1. IRRIGATION TIMING AND DURATION DETERMINED BY MOISTURE SENSORS BASED ON TDR TECHNOLOGY.
2. MOISTURE SENSORS SHALL BE PLACED IN DIFFERENT SOIL TYPES (SAND–BASED STRUCTURAL SOIL AND PLANTING BED).
3. THERE SHALL BE AT LEAST THREE ZONES CONTROLLED BY SENSORS (TREE BALLS IN PAVING, SAND–BASED STRUCTURAL SOIL BACKFILL AND PLANTING BED SOIL).
4. IRRIGATION APPLIED TO TREES BY TREE STAKES FITTED WITH DRIP EMITTERS
5. IRRIGATION UNDER PAVING APPLIED BY DRIP LINES IN PERFORATED, CORREGATED ADS–TYPE PIPING EMBEDDED IN THE CRUSHED STONE LAYER.
6. BACK FLOW PREVENTERS SHALL BE USED ON ALL PIPING ON SLOPES SUBJECT TO BACK FLOW.
7. PROVIDE AS–BUILT DRAWINGS AND INSTRUCTION MANUALS TO OWNER.
8. PROVIDE OPERATIONAL TRAINING AND TROUBLE SHOOTING SERVICES FOR ONE YEAR POST CONSTRUCTION.
9. IRRIGATION SYSTEM TO BE INSTALLED THROUGHOUT ALL NEWLY PLANTED AREAS. AFTER THE PLANT ESTABLISHMENT PERIOD, ALL AREAS NOT LABELED AS "PERMANENT IRRIGATION" ON THE PLANT SCHEDULE TO BE ABANDONED.

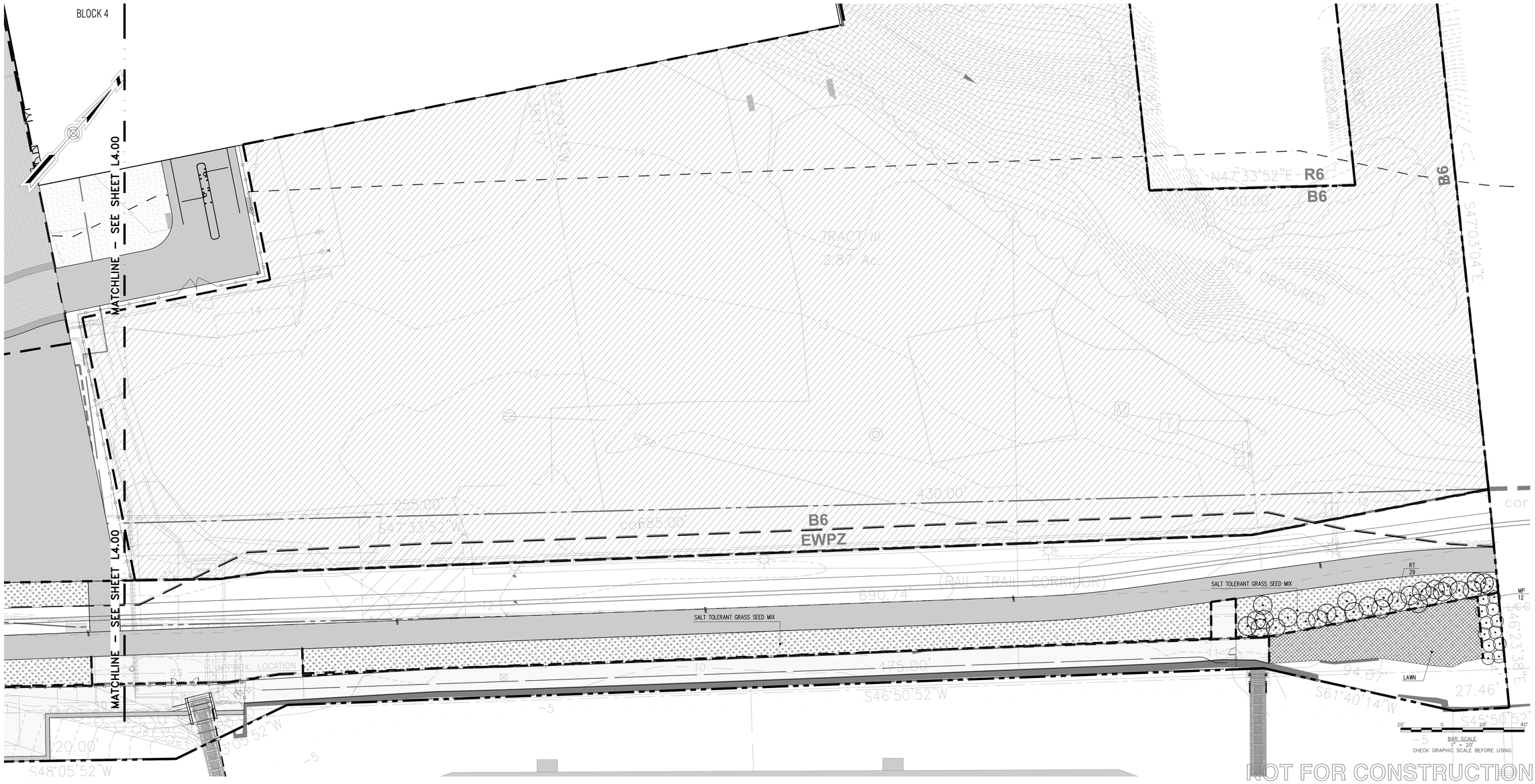

NOT FOR CONSTRUCTION

41 Hutchins Drive
Portland, Maine 04102
800.426.4262 | www.woodardcurran.com

COMMITMENT & INTEGRITY DRIVE RESULTS

THIS DOCUMENT IS THE PROPERTY OF WOODARD & CURRAN INC. AND ITS CLIENT AND SHALL NOT BE REPRODUCED OR TRANSMITTED IN ANY FORM WITHOUT THE EXPRESS WRITTEN PERMISSION OF WOODARD & CURRAN INC.

mbla inc
michael boucher landscape architecture
457 US Route 1 Suite 2
Freeport, ME 04032
t. 207.865.1080
f. 207.865.1455
www.boucherlandscape.com
©copyright 2019

REV	DESCRIPTION	DATE	CHECKED BY:
			19 OCT 2019 L4.00 PLAN

REV	DESCRIPTION	DATE	DRAWN BY:
			DESIGNED BY:

SITE PLANTING PLAN

PORTLAND FORESIDE
DEVELOPMENT CO.
PORTLAND, ME 04102

PHASE 1 SITE PLAN SUBMISSION

JOB NO.: 0227007
DATE: NOVEMBER 8, 2019
SCALE: 1"=20'
SHEET: OF

L4.10

P:\PDX\1_CAD\Plotsheets\19101 SITE PLAN\58 FORE STREET–L4.00 PLANTING PLAN.dwg, Nov 08, 2019 – 4:21pm

42x30 SHEET
1:1

FORE CONNECTOR

FORE STREET

MATCHLINE – SEE SHEET L5.10

REFER TO ARCH. ELEVATIONS FOR OVERALL RUN LENGTHS (TYP.)

REFER TO ARCH. INTERIOR ELEVATIONS FOR QUANTITIES, LENGTHS, AND MOUNTING LOCATIONS

MATCHLINE – SEE SHEET L5.10

NOT FOR CONSTRUCTION

WOODARD & CURRAN
41 Hutchins Drive
Portland, Maine 04102
800.426.4262 | www.woodardcurran.com
COMMITMENT & INTEGRITY DRIVE RESULTS

THIS DOCUMENT IS THE PROPERTY OF WOODARD & CURRAN INC., AND ITS CLIENT AND IS NOT TO BE USED FOR ANY PURPOSE OR PROJECT OTHER THAN THE SPECIFIC PROJECT FOR WHICH IT WAS PREPARED WITHOUT THE EXPRESS WRITTEN CONSENT OF WOODARD & CURRAN INC.

mbla inc
michael boucher landscape architecture
457 US Route 1 Suite 2
Freeport, ME 04032
t 207.865.1080
f 207.865.1455
www.boucherlandscape.com

c copyright 2019

REV	DESCRIPTION	DATE	CHECKED BY:
1	08 SHEET P1 SUBMIT	08	

REV	DESCRIPTION	DATE	DRAWN BY:

DESIGNED BY:

SITE LIGHTING PLAN

PORTLAND FORESIDE
DEVELOPMENT CO.
PORTLAND, ME 04102

PHASE 1 SITE PLAN SUBMISSION

JOB NO.: 0227007
DATE: NOVEMBER 8, 2019
SCALE: 1"=20'
SHEET: OF
L5.00

BAR SCALE
1" = 20'
0 20' 40'

P:\PROJECTS\CAD\Plotsheets\19101 SITE PLAN\08 FORE STREET SPS LIGHTING PLAN_recover.dwg, Nov 08, 2019 - 4:37pm

42x30 SHEET
1:1

LIGHTING SCHEDULE

SYM.	QTY.	NAME
R1	--	USAI Lighting BeveLED2.2 Basic Downlight
S1	--	Lumenwerx Via 2 Symmetric
S2	--	LEDLinear
YG1	--	Bega Head: 77930-3000K-(Finish)
YG2	--	Forms+Surfaces Helio Bollard 41" height Helio Bollard-3000K-MOD Painted "Galvanized Steel" finish
YG3	--	Forms+Surfaces Helio Bollard 41" height Helio Bollard-3000K-MOD Painted "Galvanized Steel" finish
YG3A	--	Erco Tesis spot distribution 35077.023-(3000K)-(Finish)
YG6	-- --	Forms+Surfaces Helio Bollard 41" height Helio Bollard-MOD Security-MOD Painted "Galvanized Steel" finish TBD
YG7	--	Structura BOL round straight solid wood pole BOL-STRAIGHT POLE-20FT-5.5"-5.5"-(Wood Finish TBD)-(Tenon mounting)
YG8	--	Valmont Round Non-Tapered Aluminum Pole-20' Height-(Finish)
YG9	--	Lumenpulse Lumenbeam Medium LBM-277-30K-NS-LSLH-(Finish)-DIM-CRC-UL-(Cable Length) Tenon Mounting: PM4-1 Wide Snoot: LBMSNW-(Finish)-BK-MOD CROSS BAFFLE
YG10	--	Lumenpulse Lumenbeam Medium LBM-277-30K-WFL-(Finish)-CRC-DIM-UL-(Cable Length) Tenon Mounting: PM4-1 Wide Snoot: LBMSNW-(Finish)-BK-MOD CROSS BAFFLE
YG11	--	Bega 77 208-3000K-(Finish)
YG12	--	Lumenpulse Lumen facade – exterior Fixture: LOG ASHRAE-277 (Voltage TBC)-48- 3000K-10x10-SAM-(Finish)-DIM-ETE-CRC Radial Louver: LOGRD-48-BK (Finish TBC)-CRC
YP1	--	Santa and Cole Arne S Domus catenary cable: Tivoli TBD
YR1	--	Lumenpulse Squero SQUR-MRO55-B-LED-80-500-30-UNV-4FT-D1-1-(Mounting)-(Finish)
YS1-4'	--	Lumenpulse Lumen facade – exterior Fixture: LOG ASHRAE-277 (Voltage TBC)-48- 3000K-30x30-SAM-(Finish)-DIM-ETE-CRC Radial Louver: LOGRD-48-BK (Finish TBC)-CRC
YS1-1'	--	Lumenpulse Lumen facade – exterior Fixture: LOG ASHRAE-277 (Voltage TBC)-12- 3000K-30x30-SAM-(Finish)-DIM-ETE-CRC Radial Louver: LOGRD-48-BK (Finish TBC)-CRC
YS3	--	Lumenpulse Lumenbeam Large LBL-277-30K-NF-LSLV-(Finish)-DIM-CRC-(Cable Length)-YK TN4 Tenon Adapter Wide Snoot: LBLSNW-(Finish)-BK-MOD CROSS BAFFLE AND 9" DEEP SNOOT
YR4	--	Valmont Round Non-Tapered Aluminum Pole-10' Height-(Finish)
YS5	--	Acolyte Ribbonlyte Fixture: RB-90-SWS265-2.230-(Finish) Extrusion: AS1 Surface with horizontal mounting clips Frosted Lens Remote Dimmable Driver: 0-10V Dimmable 96W Driver
YS6	--	Wagner Lumenlinear or Lumenpod Lumenlinear TBD-LUIS-30K-20-120-MS-(Length)-(Finish)
YS7	--	Tegan Exton System Configuration TBC with Landscape Architects
YS9	--	Linea Lighting
YS10	--	Ledlinear Xoolum
YS11	--	Lumenpulse lumenbeam small
YS12	--	V2 Core 200 SX Surface
YS13	--	Lucifer Cylinder CY3
YW3	--	Visa Passage OW2480-L30K-L-3000K-MVOLTO-FT-(Finish)-DS
YW5	--	Erco Kona XS 34832.023-3000K-(Finish)
YW6	--	Lumenpulse Lumenbeam Medium LBL-277-30K-NF-LSLH-(Finish)-DIM-CRC-UL-(Cable Length) Wide Snoot: LBLSNW-(Finish)-BK-MOD CROSS BAFFLE
YW8	--	Lumenpulse Lumenbeam Medium LBL-277-30K-F-LSLH-(Finish)-DIM-CRC-UL-(Cable Length) Wide Snoot: LBLSNW-(Finish)-BK-MOD CROSS BAFFLE

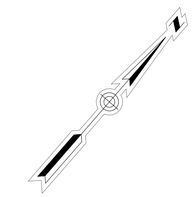

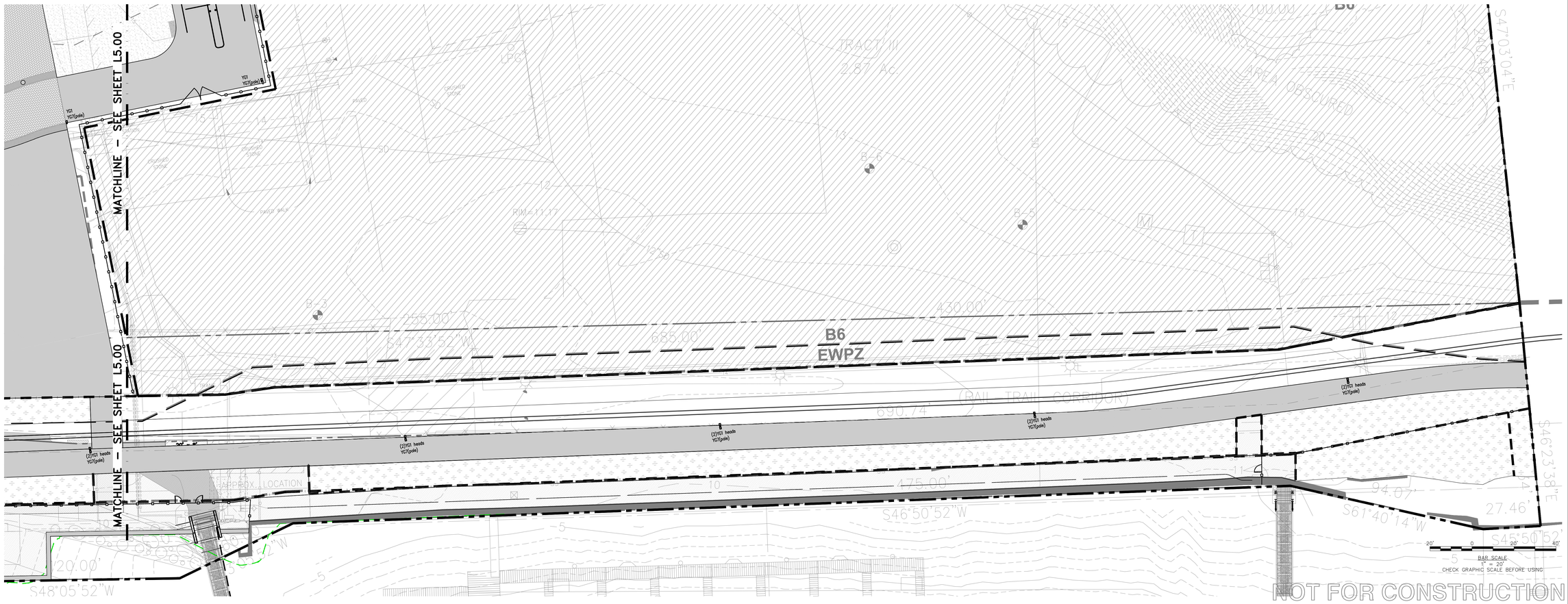

NOT FOR CONSTRUCTION

41 Hutchins Drive
Portland, Maine 04102
800.426.4262 | www.woodardcurran.com

COMMITMENT & INTEGRITY DRIVE RESULTS

THIS DOCUMENT IS THE PROPERTY OF WOODARD & CURRAN INC. AND ITS CLIENT AND SHALL NOT BE REPRODUCED OR TRANSMITTED IN ANY FORM WITHOUT THE EXPRESS WRITTEN CONSENT OF WOODARD & CURRAN INC.

mbla inc
michael boucher landscape architecture
457 US Route 1 Suite 2
Freeport, ME 04032
t 207.865.1080
f 207.865.1455
www.boucherlandscape.com

c copyright 2019

REV	DESCRIPTION	DATE
1	08 JUNE 2020 PLSUP #1	

CHECKED BY:

REV	DESCRIPTION	DATE

DRAWN BY:
DESIGNED BY:

SITE LIGHTING PLAN

PORTLAND FORESIDE
DEVELOPMENT CO.
PORTLAND, ME 04102

PHASE 1 SITE PLAN SUBMISSION

JOB NO.: 0227007
DATE: NOVEMBER 8, 2019
SCALE: 1"=20'
SHEET: OF

L5.10

P:\PROJ\L CAD\Plotsheets\19101 SITE PLAN\08 FORE STREET SPS LIGHTING PLAN_recover_recover.dwg, Nov 08, 2019 - 4:36pm

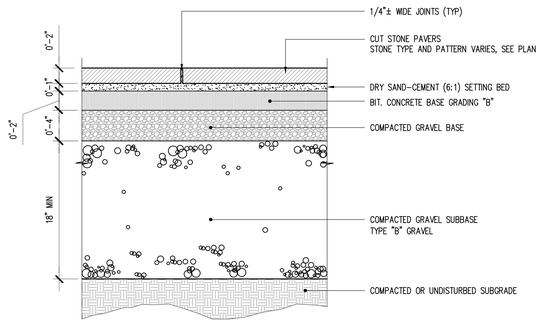

1 LIGHT DUTY STONE PAVING - TO BE COORDINATED
1 1/2" = 1'-0"

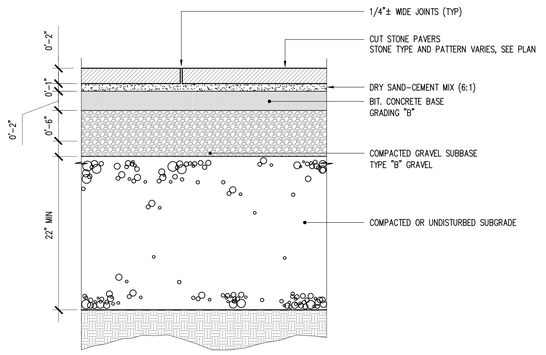

2 HEAVY-DUTY STONE PAVING - TO BE COORDINATED
1 1/2" = 1'-0"

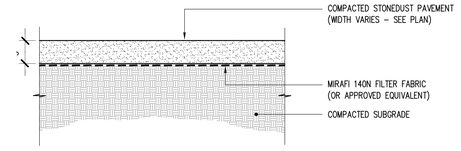

3 STONEDUST - TO BE CONFIRMED
1 1/2" = 1'-0"

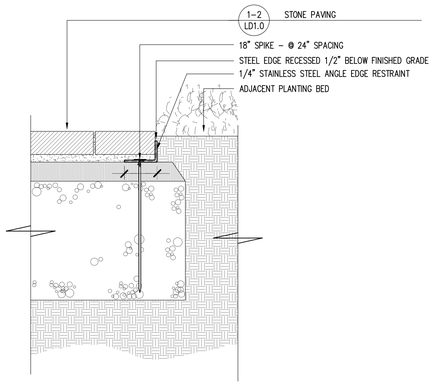

4 EDGE - PAVING TO PLANTING
1 1/2" = 1'-0"

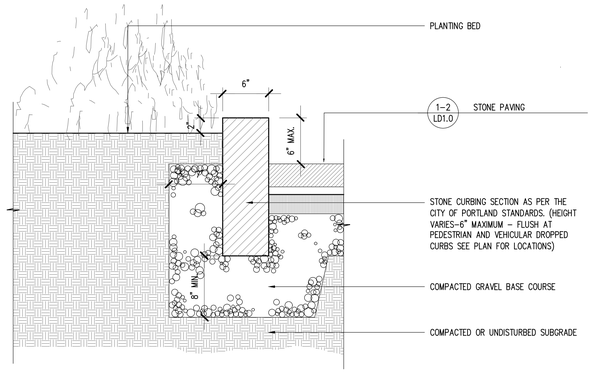

5 GRANITE CURB-PLANTING
1 1/2" = 1'-0"

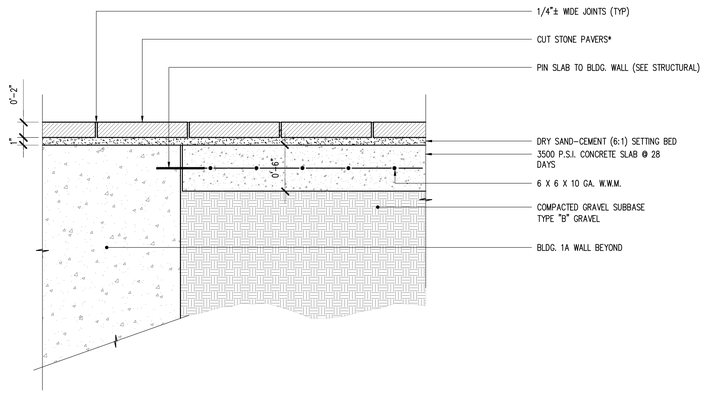

6 LIGHT DUTY STONE PAVING - OVER CONCRETE SLAB
1 1/2" = 1'-0"

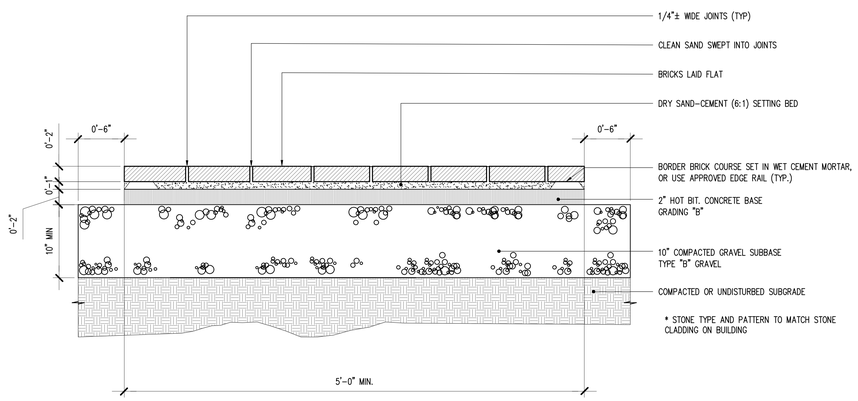

7 BRICK SIDEWALK
1 1/2" = 1'-0"

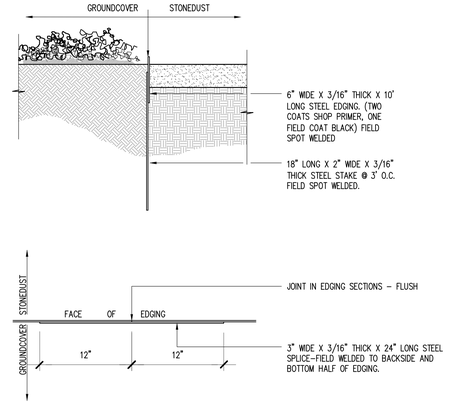

8 STEEL RESTRAINT EDGING
1 1/2" = 1'-0"

NOT FOR CONSTRUCTION

41 Hutchins Drive
Portland, Maine 04102
800.426.4262 | www.woodardcurran.com
COMMITMENT & INTEGRITY DRIVE RESULTS

THIS DOCUMENT IS THE PROPERTY OF WOODARD & CURRAN INC. AND ITS CLIENT AND SHALL NOT BE REPRODUCED OR TRANSFERRED TO ANY PERSON OR ENTITY OTHER THAN THE CLIENT FOR WHOM IT WAS PREPARED, WITHOUT THE PRIOR WRITTEN CONSENT OF WOODARD & CURRAN INC.

mbla inc
michael boucher landscape architecture
457 US Route 1 Suite 2
Freeport, ME 04032
t. 207.865.1080
f. 207.865.1455
www.boucherlandscape.com
©copyright 2019

REV	DESCRIPTION	DATE	CHECKED BY:
1	PB 1 DOR SUBMITTAL	10/15/19	MJB

REV	DESCRIPTION	DATE	DRAWN BY:

DESIGNED BY:

SITE DETAILS

PORTLAND FORESIDE
DEVELOPMENT CO.
PORTLAND, ME 04102

PHASE 1 SITE PLAN SUBMISSION

JOB NO.: 0227007
DATE: NOVEMBER 8, 2019
SCALE: AS NOTED
SHEET: OF

LD1.0

P:\PTDO\1_CAD\Plotsheets\19101 SITE PLAN\08 FORE STREET-LD SITE DETAILS.dwg, Nov 08, 2019 - 4:14pm

42x30 SHEET
1:1

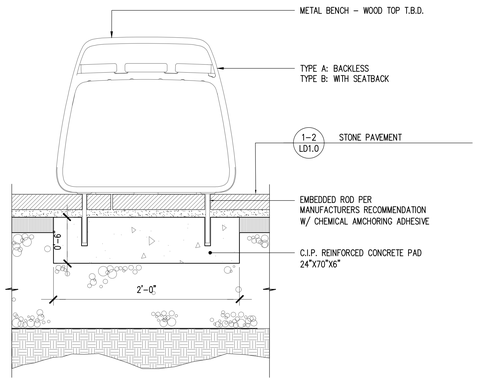

1 BENCH ATTACHMENT
1 1/2" = 1'-0"

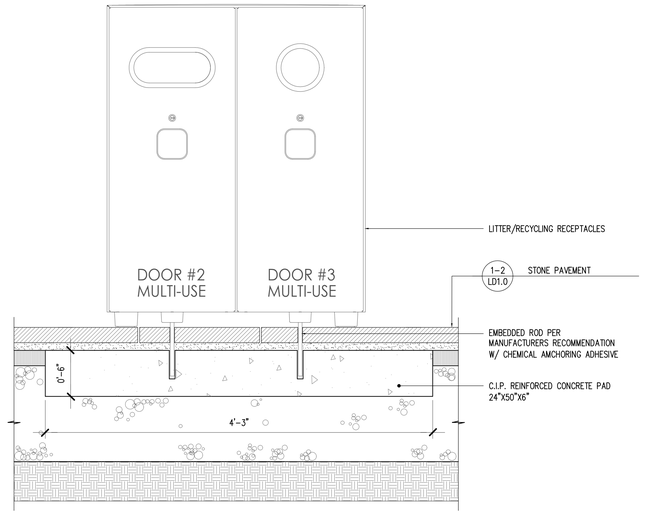

2 LITTER/RECYCLING RECEPTACLE ATTACHMENT
1 1/2" = 1'-0"

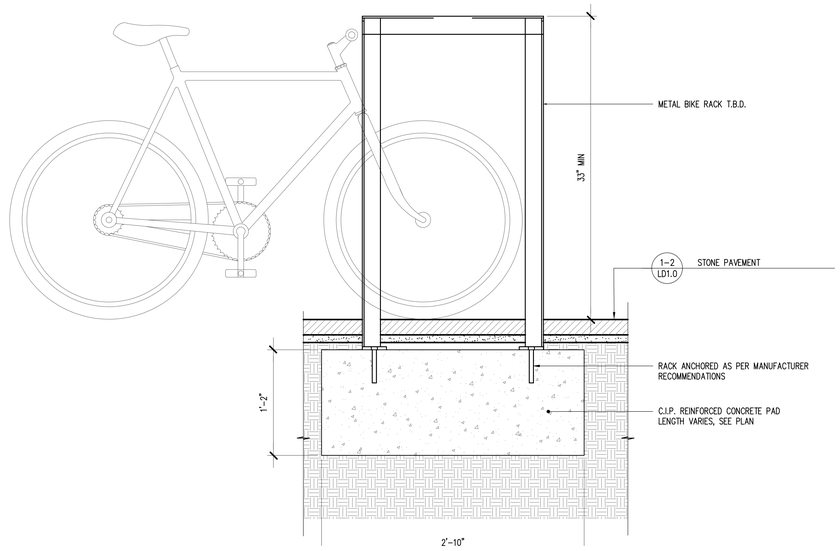

3 BIKE RACK
1 1/2" = 1'-0"

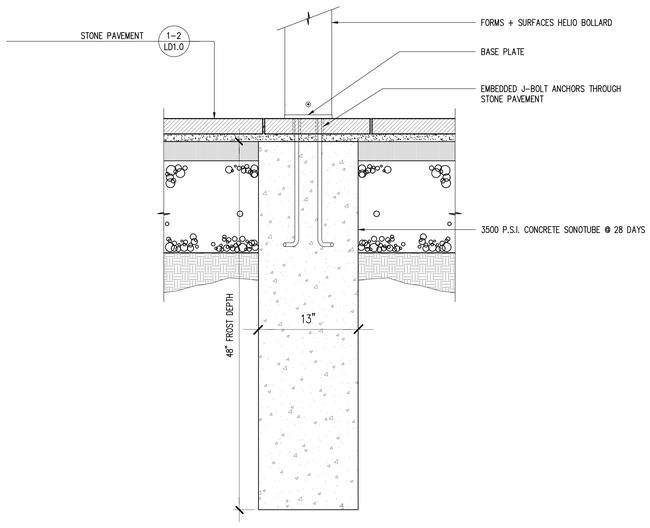

4 STEEL BOLLARD
1-1/2"=1'-0"

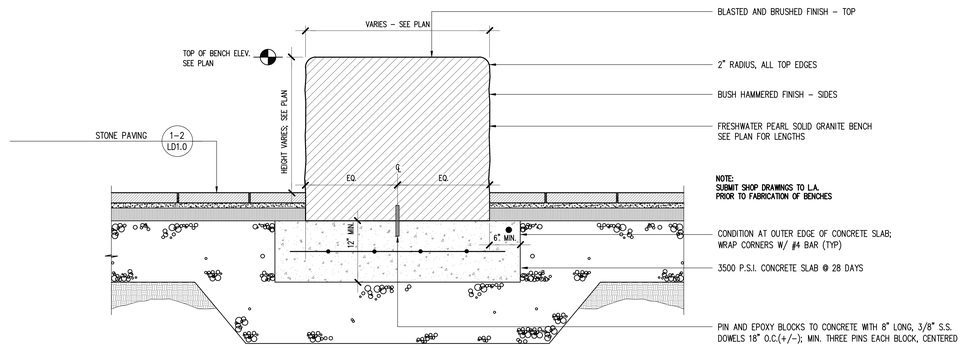

5 MONOLITHIC GRANITE BENCH
1"=1'-0"

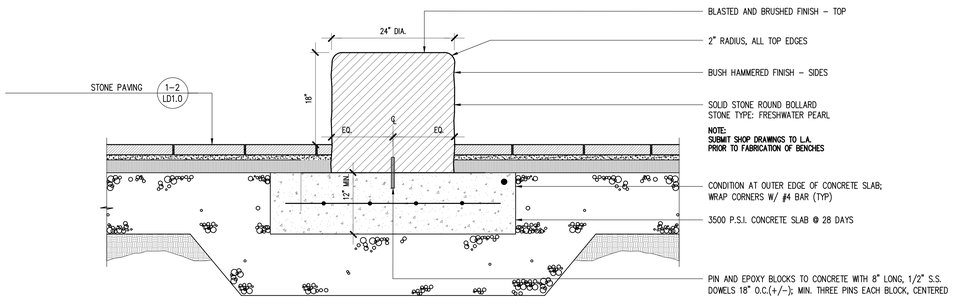

6 STONE BOLLARD
1"=1'-0"

NOT FOR CONSTRUCTION

41 Hutchins Drive
Portland, Maine 04102
800.426.4262 | www.woodardcurran.com

COMMITMENT & INTEGRITY DRIVE RESULTS

THIS DOCUMENT IS THE PROPERTY OF WOODARD & CURRAN INC. AND HIS CLIENT AND IS NOT TO BE USED FOR ANY PURPOSE OR ON ANY PROJECT OTHER THAN THAT SPECIFICALLY PLANNED FOR IN CONNECTION WITH THIS DOCUMENT.

mbla inc
michael boucher landscape architecture
457 US Route 1 Suite 2
Freeport, ME 04032
t. 207.865.1080
f. 207.865.1455
www.boucherlandscape.com

©copyright 2019

REV	DESCRIPTION	DATE
1	08.30.19 PB SUBMITTAL	

CHECKED BY:

REV	DESCRIPTION	DATE

DESIGNED BY:
DRAWN BY:

SITE FURNISHING DETAILS

PORTLAND FORESIDE
DEVELOPMENT CO.
PORTLAND, ME 04102

PHASE 1 SITE PLAN SUBMISSION

JOB NO.: 0227007
DATE: NOVEMBER 8, 2019
SCALE: AS NOTED
SHEET: 4 OF

LD2.0

P:\PTDY\1_CAD\Plotsets\19101 SITE PLAN\08 FORE STREET-LD SITE DETAILS.dwg, Nov 08, 2019 - 4:17pm

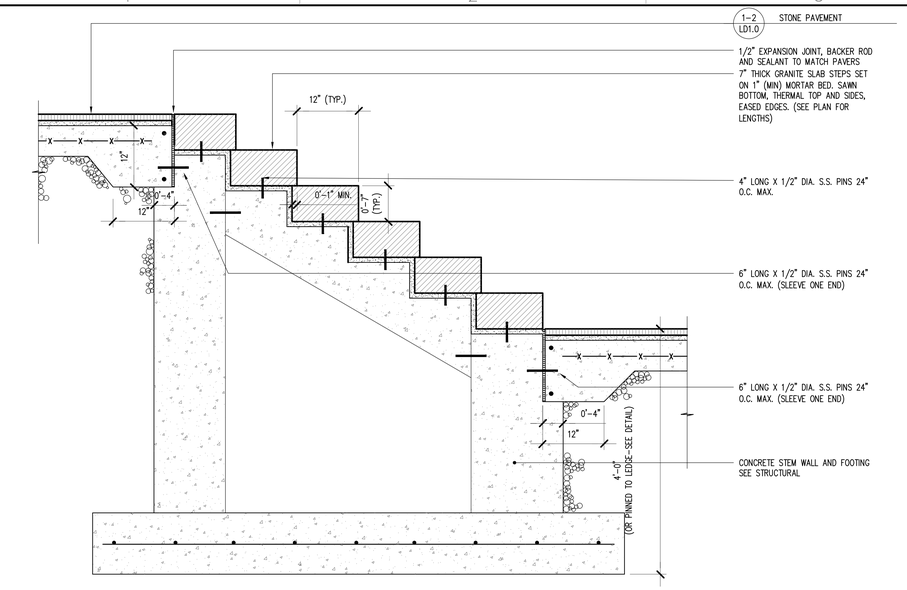

1 STONE STAIRS
1"=1'-0"

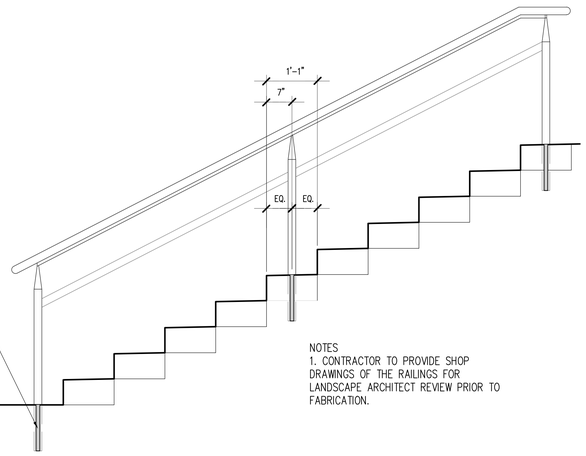

NOTES
1. CONTRACTOR TO PROVIDE SHOP DRAWINGS OF THE RAILINGS FOR LANDSCAPE ARCHITECT REVIEW PRIOR TO FABRICATION.

3 CUSTOM STAINLESS STEEL HANDRAIL ELEVATION
3/4"=1'-0"

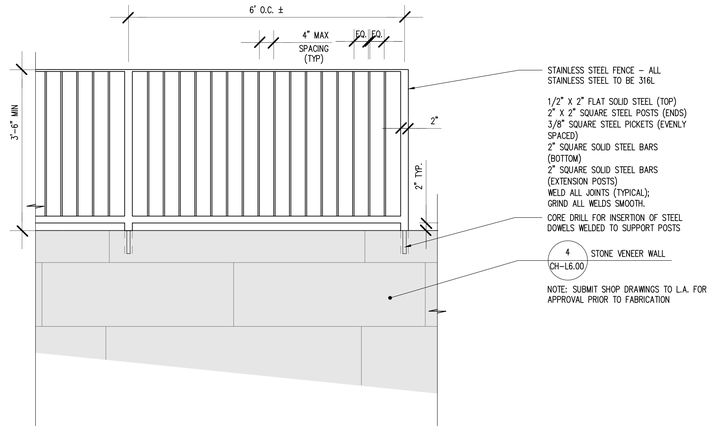

2 CUSTOM STAINLESS STEEL GUARDRAIL
3/4"=1'-0"

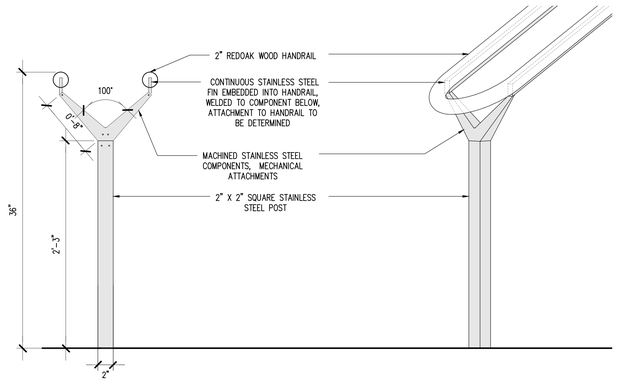

4 CUSTOM STAINLESS STEEL HANDRAIL DETAIL
1 1/2"=1'-0"

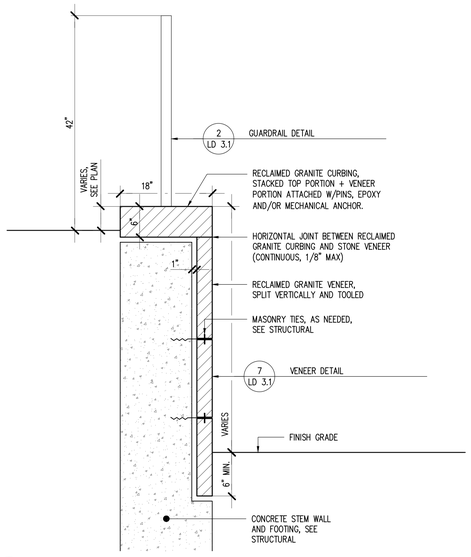

5 RECYCLED GRANITE CURB VENEER RETAINING WALL
1"=1'-0"

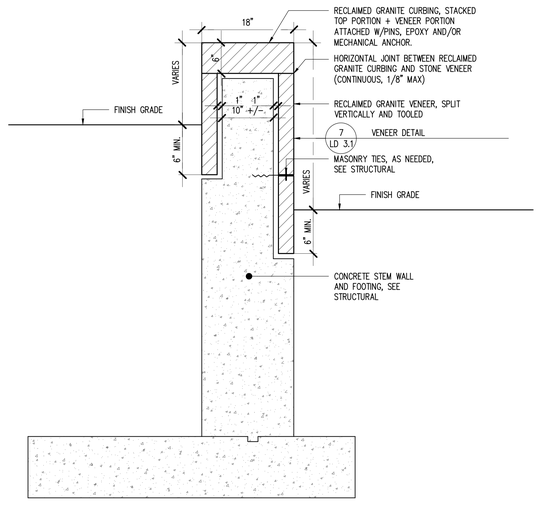

6 RECYCLED GRANITE CURB VENEER WALL - FREESTANDING
1"=1'-0"

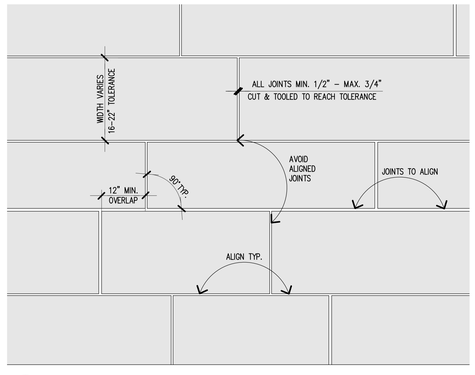

7 RECYCLED GRANITE CURB VENEER WALL ELEVATION DETAIL
3/4"=1'-0"

NOT FOR CONSTRUCTION

WOODARD & CURRAN
41 Hutchins Drive
Portland, Maine 04102
800.426.4262 | www.woodardcurran.com
COMMITMENT & INTEGRITY DRIVE RESULTS
THIS DOCUMENT IS THE PROPERTY OF WOODARD & CURRAN INC. AND ITS CLIENT AND IS NOT TO BE USED FOR ANY PURPOSE OR PROJECT OTHER THAN THE SPECIFIC PROJECT AND PURPOSE FOR WHICH IT WAS PREPARED.

mbla inc
michael boucher landscape architecture
457 US Route 1 Suite 2
Freeport, ME 04032
t. 207.865.1080
f. 207.865.1455
www.boucherlandscape.com
©copyright 2019

REV	DESCRIPTION	DATE
1	08.30.19 SITE PLAN SUBMISSION	

DESIGNED BY: BDM | DRAWN BY: BDM | CHECKED BY: DLC

PORTLAND FORESIDE DEVELOPMENT CO.
PORTLAND, ME 04102

PHASE 1 SITE PLAN SUBMISSION

STAIR DETAILS PLAN

JOB NO.: 0227007
DATE: NOVEMBER 8, 2019
SCALE: AS NOTED
SHEET: 4 OF

LD3.0

P:\PTDO\1 CAD\Worksheets\19101 SITE PLAN\08 FORE STREET-LD SITE DETAILS.dwg, Nov 08, 2019 - 4:20pm

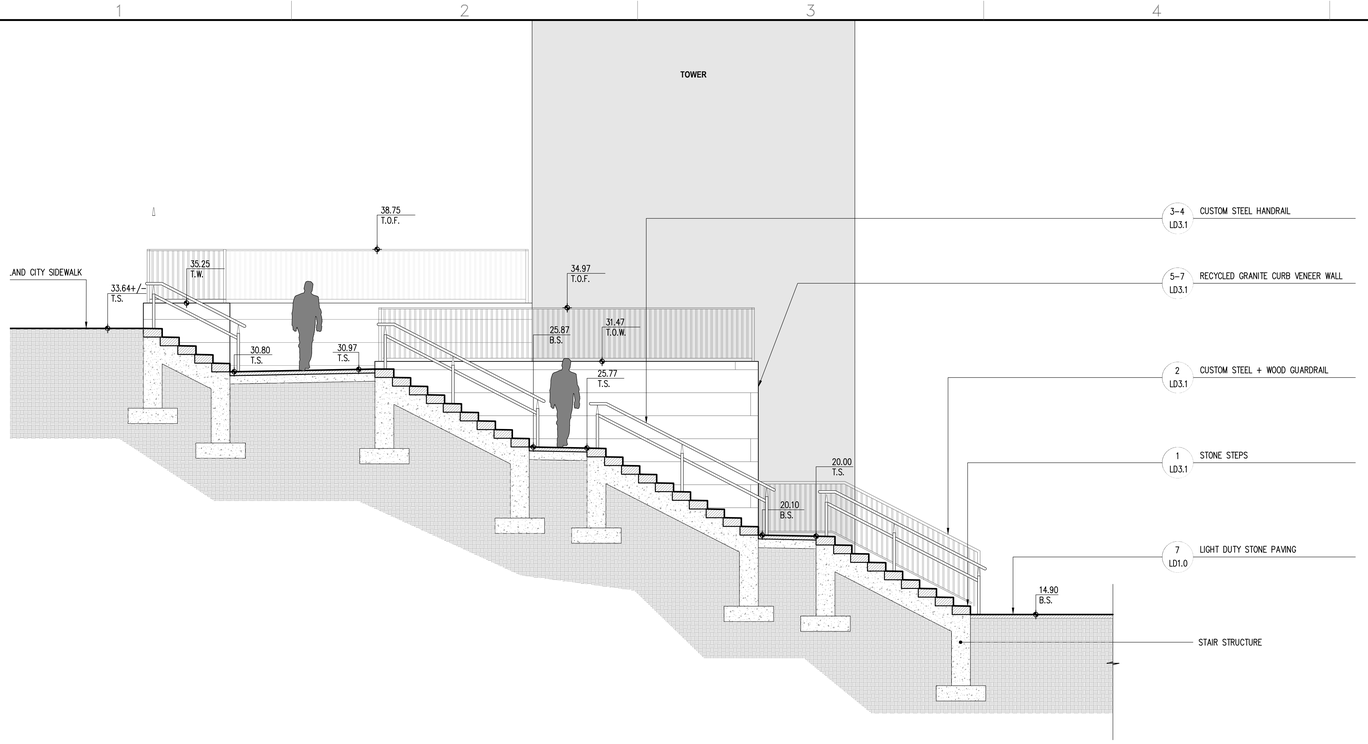

1 NORTH STAIR ELEVATION

1/4" = 1'-0"

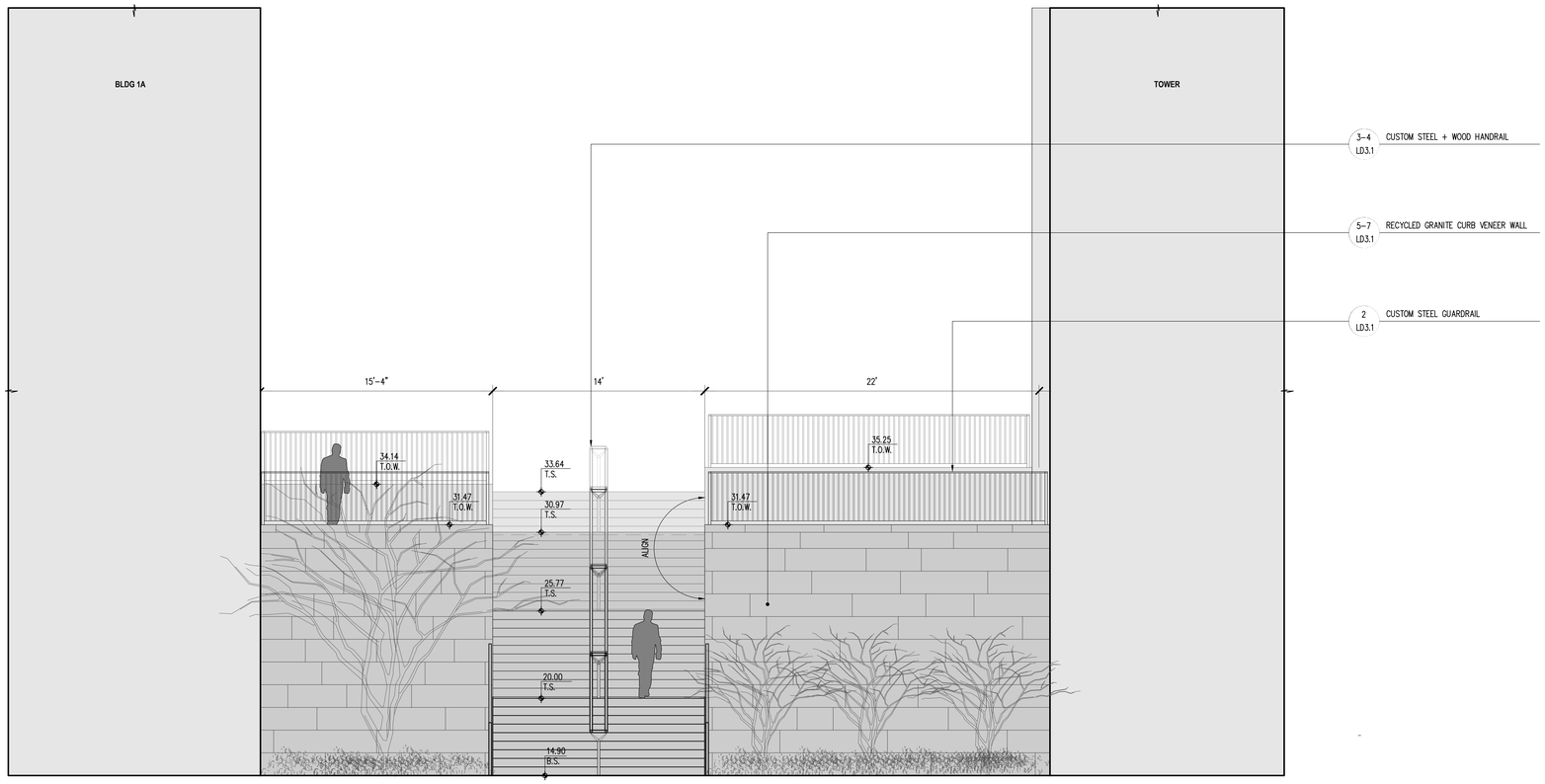

2 WEST STAIR ELEVATION

1/4" = 1'-0"

NOT FOR CONSTRUCTION

41 Hutchins Drive
Portland, Maine 04102
800.426.4262 | www.woodardcurran.com
COMMITMENT & INTEGRITY DRIVE RESULTS

THIS DOCUMENT IS THE PROPERTY OF WOODARD & CURRAN INC. AND ITS CLIENT AND IS NOT TO BE USED FOR ANY PURPOSE OR PROJECT OTHER THAN THE SPECIFIC PROJECT FOR WHICH IT WAS PREPARED.

mbla inc
michael boucher landscape architecture
457 US Route 1 Suite 2
Freeport, ME 04032
t 207.865.1080
f 207.865.1455
www.boucherlandscape.com
©copyright 2019

REV	DESCRIPTION	DATE
1	90% SUBMITTAL	10.15.19

REV	DESCRIPTION	DATE

DESIGNED BY:
DRAWN BY:
CHECKED BY:

STAIR ELEVATIONS

PORTLAND FORESIDE
DEVELOPMENT CO.
PORTLAND, ME 04102

PHASE 1 SITE PLAN SUBMISSION

JOB NO.: 0227007
DATE: NOVEMBER 8, 2019
SCALE: AS NOTED
SHEET: OF

LD3.1

P:\PTDC\1 CAD\Plotsheets\19101 SITE PLAN\SB FORE STREET-LD3.0 STAIR SECTIONS.dwg, Nov 08, 2019 - 4:21pm

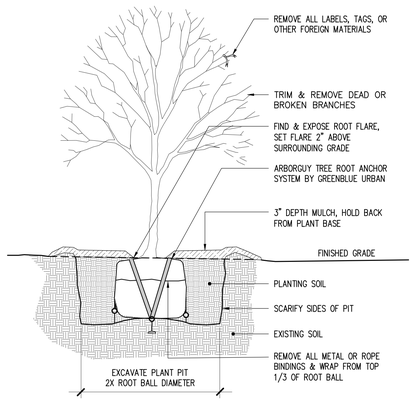

NOTES:

1. SET TREE PLUMB.
2. SECURE TREE AS REQUIRED ACCORDING TO TREE SIZE, LOCATION, & WND/WEATHER CONDITIONS.
3. IF USING ROOTBALL STABILIZATION, FOLLOW MANUFACTURER'S RECOMMENDATIONS.

1 TREE PLANTING & STAKING DETAIL

1/2" = 1'-0"

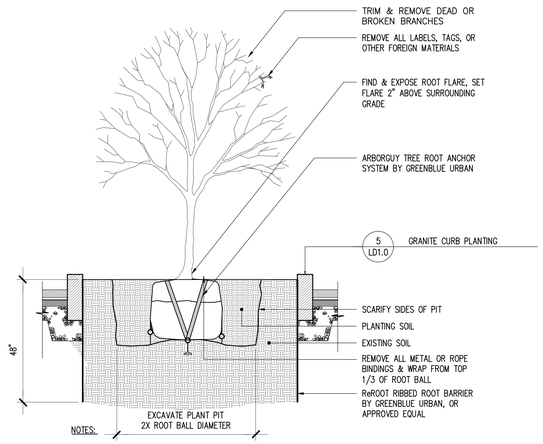

NOTES:

1. SET TREE PLUMB.
2. SECURE TREE AS REQUIRED ACCORDING TO TREE SIZE, LOCATION, & WND/WEATHER CONDITIONS.
3. IF USING ROOTBALL STABILIZATION, FOLLOW MANUFACTURER'S RECOMMENDATIONS.

2 STREET TREE PLANTING

1/2" = 1'-0"

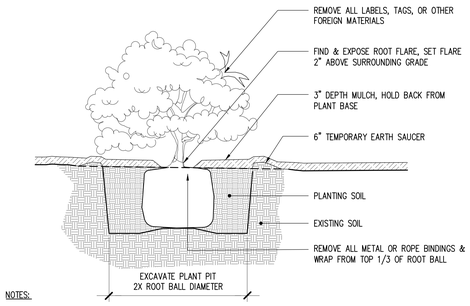

NOTES:

1. SET SHRUB PLUMB.
2. SECURE SHRUB AS MAY BE REQUIRED ACCORDING TO SIZE, LOCATION, & WND/WEATHER CONDITIONS.
3. IF USING ROOTBALL STABILIZATION, FOLLOW MANUFACTURER'S RECOMMENDATIONS.

3 SHRUB PLANTING DETAIL

1/2" = 1'-0"

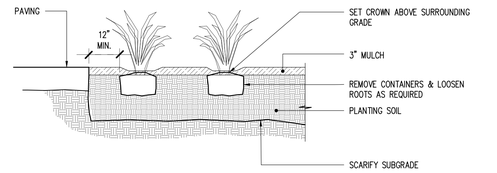

4 GROUNDCOVER PLANTING DETAIL

1/2" = 1'-0"

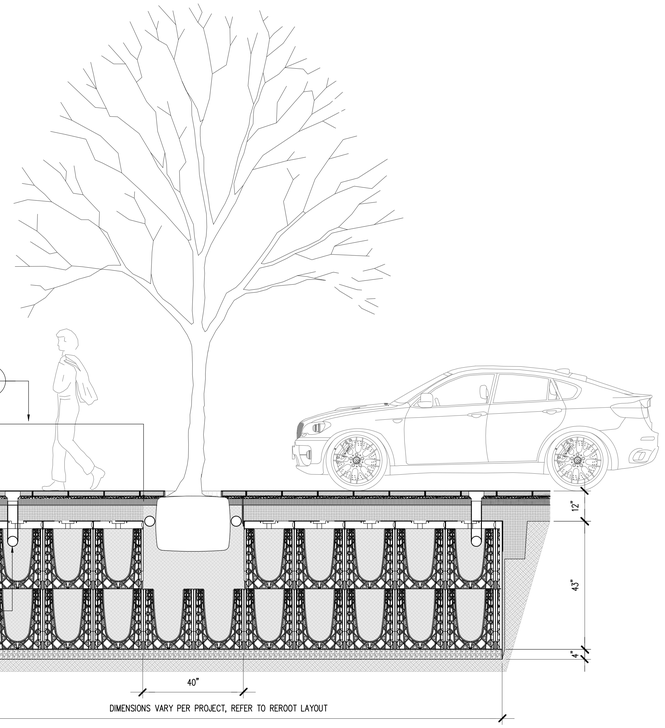

5 ROOTSPACE PLANTING SYSTEM

NOT TO SCALE

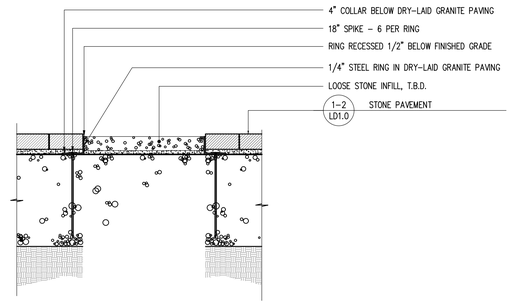

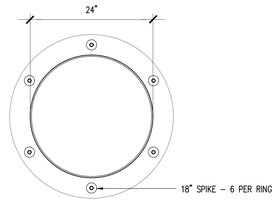

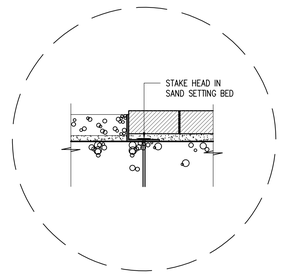

6 TREE RING IN STONE PAVEMENT

NOT TO SCALE

41 Hutchins Drive
Portland, Maine 04102
800.426.4262 | www.woodardcurran.com
COMMITMENT & INTEGRITY DRIVE RESULTS

THIS DOCUMENT IS THE PROPERTY OF WOODARD & CURRAN INC. AND ITS CLIENT AND SHALL NOT BE REPRODUCED OR TRANSMITTED IN ANY FORM WITHOUT THE EXPRESS WRITTEN CONSENT OF WOODARD & CURRAN INC.

mbla inc
michael boucher landscape architecture
457 US Route 1 Suite 2
Freeport, ME 04032
t. 207.865.1080
f. 207.865.1455
www.boucherlandscape.com

©copyright 2019

REV	DESCRIPTION	DATE	CHECKED BY
1	08 SPEC-LD SITE PLAN		

REV	DESCRIPTION	DATE	DRAWN BY	DESIGNED BY

SITE PLANTING DETAILS

PORTLAND FORESIDE
DEVELOPMENT CO.
PORTLAND, ME 04102

PHASE 1 SITE PLAN SUBMISSION

JOB NO.:	0227007
DATE:	NOVEMBER 8, 2019
SCALE:	AS NOTED
SHEET:	OF

LD4.0

NOT FOR CONSTRUCTION

P:\PTDC\1_CAD\Plotsheets\19101 SITE PLAN\08 FORE STREET-LD SITE DETAILS.dwg, Nov 08, 2019 - 4:25pm

Memorandum
Planning and Urban Development Department
Planning Division

To: Sean Dundon, Chair and Members of the Portland Planning Board
From: Andrew Tufts, Planner
Date: December 6, 2019
Re: Hotel Development, 754 Congress St, CenterWest, LLC
Project #: PL-000846-2019 CBL: 054 G001
Meeting: December 10, 2019

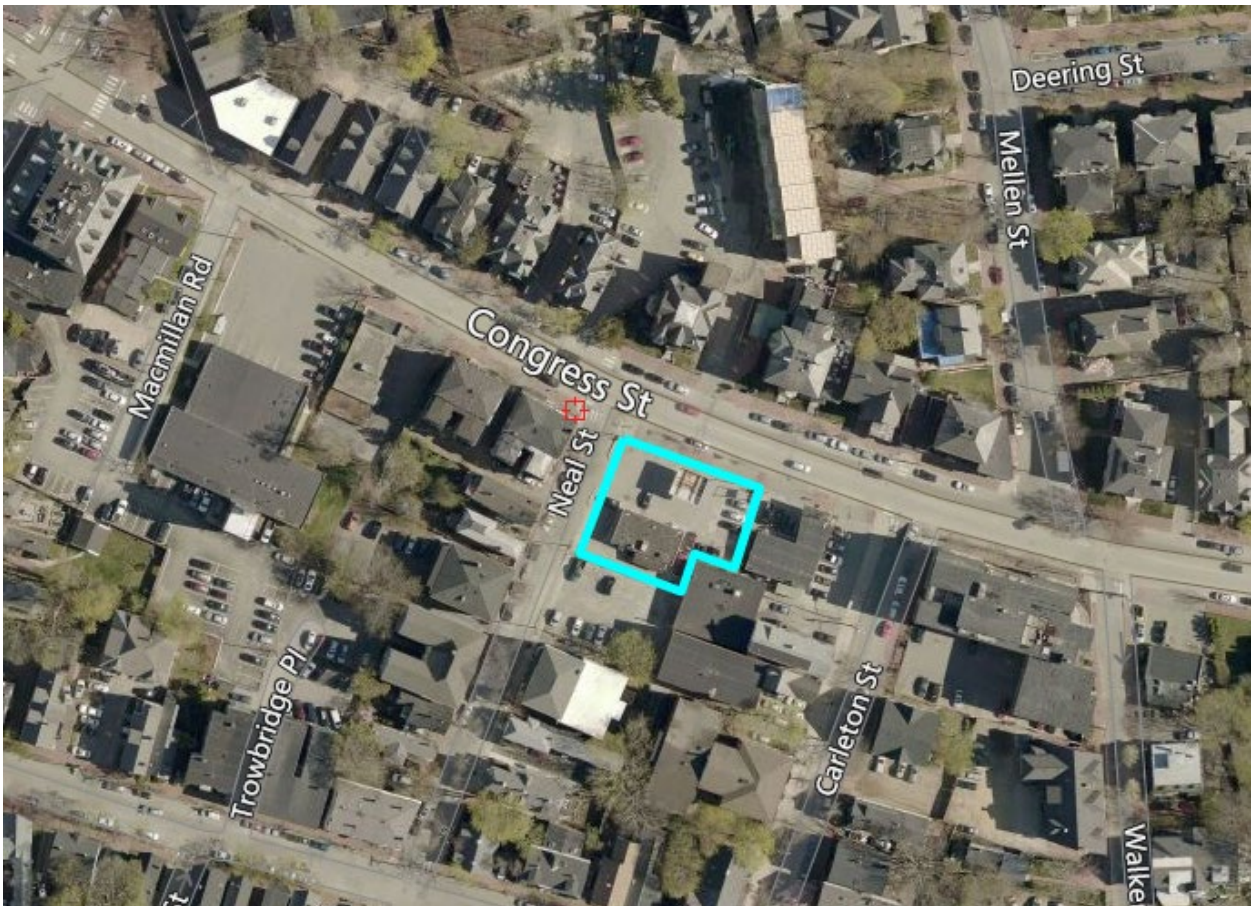

Figure 1: Parcel outline - Source: CONNECTexplorer

I. INTRODUCTION

CenterWest, LLC, has submitted a Level III Site Plan, Subdivision & Conditional Use application for the development of a four-story, 46-room hotel. The property is a 10,692 square foot parcel at 754 Congress Street, on the corner of Congress & Neal Street, west of Carleton Street. The neighborhood is mixed-use, with residential, commercial, and institutional uses. The subject property is in the B-2b community business zone. It is also in the West End Historic District, and therefore subject to review by historic preservation staff.

The Planning Department sent 217 notices advertising this meeting to property owners within 500 feet of the site. Legal advertisement ran in the November 23rd & November 25th editions of the Portland Press Herald.

Applicant: CenterWest, LLC

Consultants: Adrienne Fine, P.E. (Terradyn Consultants, LLC (Engineer)) David Lloyd, PA (Archetype Architects) John Schwanda (Owen Haskell Inc. (Surveying))

II. REQUIRED REVIEWS

Waiver Requests	*Applicable Standards*
To allow non-compliant parking stall dimensions within the surface parking to vary from the required 9' width to 8.5' width as shown on the Site Plan. Staff Comments: The City's Traffic Engineer supports a waiver given that all parking is valet.	Technical Manual, *Section 1.14* Parking space dimensional requirements for a standard parking space; 9' wide by 18' long.
Review	*Applicable Standards*
Site Plan	*Section 14-526*
Subdivision	*Section 14-497*
Conditional Use	*IZ - Hotel*

III. PROJECT DATA

Existing Zoning	B-2b community business zone
Existing Use	*Gas Station, Convenience Store, Surface Parking*
Proposed Use	*4-story, 46-room Hotel*
Parcel Size	10,692 SF

	Existing	*Proposed*	*Net Change*
Building Footprint	1,527 SF	8,145 SF	+ 6,618 SF
Building Floor Area	1,527 SF	36,000 SF	+ 34,473 SF
Impervious Surface Area	10,692 SF	9,591 SF	- 1,101 SF
Parking Spaces	4	17	+ 13
Bicycle Parking Spaces	0	4	+ 4



Figure 2: Existing conditions - Source: Google Maps

IV. EXISTING CONDITIONS

The proposed development site is located on the eastern corner of Congress and Neal Streets in Portland's West End neighborhood and is developed with an existing 1-story gas station convenience store and paved parking area. The applicant is CenterWest, LLC, and the owner of the parcel is S&A 786 Holding LLC. The parcel is approximately 0.25 acres in size. The existing structures, gas tanks, and pavement will be removed from the site. The site is bordered by Tandem Bakery to the east, multifamily residential to the south and west, and The Francis Hotel to the north across Congress Street. The nearest open spaces are Deering Oaks, an approximately 8-minute walk North, and the Western Promenade, an approximately 10-minute walk South-West.

The existing sidewalk along Congress Street is brick, while the sidewalk along Neal Street is concrete. Both will be replaced with brick. There is one young street tree on Congress Street that would be removed during construction and replaced with three Honey locust trees. Due to overhead wires and site constraints, street trees only exist along the western side of Neal Street.

Owen Haskell, Inc. completed a boundary and topographic survey of the site in June of 2019. There were no existing or proposed easements identified.



Figure 3: Conceptual rendering - Congress Street looking south - Source: Archetype Architects

V. PROPOSED DEVELOPMENT

The proposed development is a four-story, 46-room hotel building approximately 36,000 square-feet in size. To facilitate this development, an existing building, gas terminals, and surface paving would be demolished. The building would include a 17-space, ground-level structured parking garage beneath a portion of the building, ground-floor commercial space, and a spa. All curb cuts along Congress Street will be closed, while one will provide vehicular access to the site from Neal Street.

The ground floor of the proposed building will house the Longfellow Hotel lobby, a commercial space, and a portion of the spa. The hotel rooms will be located on the second through fourth floors. The spa will also be in the basement level, mezzanine level, and third floor. A gym will be located on the second floor, and a library will be located on the fourth floor. Both the spa and the commercial space will have on-site outdoor areas at the ground level.

Neal Street is currently one-way. The applicant is proposing to make Neal Street two-way up to the property boundary. City staff support this proposal.

Bicycle storage will be provided at bike hitches along the Congress Street frontage. A solid waste storage area is proposed on the first floor and will be accessed from the covered parking area.

VI. PUBLIC COMMENT AND NEIGHBORHOOD MEETING

The applicant team held a neighborhood meeting on the evening of Monday, October 21st, from 6:30 PM until approximately 8 PM, at the location of Tandem Bakery, immediately adjacent to the proposed development site. Approximately 20 to 24 members of the public attended, with 19 signing the sign-in sheet.

Attending on behalf of the development team were David Lloyd and Sam Berry from Archetype Architects, and CenterWest, LLC principles, Nate DeLois, Anthony Delois, and David Swardlick. An overview of the project was presented by Nate DeLois and David Lloyd. The presentation was followed by comments and questions. There were several concerns regarding traffic and parking on Neal Street. Currently, Neal Street is one-way with no parking limits. The applicant is proposing to change part of Neal Street to two-way. It was asked why Neal Street couldn't be changed to 2-hour parking. Additionally, there was discussion around the programming of the building and how it would interact with the surrounding neighborhood.

VII. RIGHT, TITLE, & INTEREST AND FINANCIAL & TECHNICAL CAPACITY

The owner of the property is CenterWest, LLC. The applicant provided a copy of the warranty deed, recorded at the Cumberland County Registry of Deeds in book 29094 page 171, which demonstrates their right, title and interest in the property.

The applicant is working with multiple banks on funding options and a commitment letter stating financial capacity will be provided to the city when obtained.

The applicant team cited their experience and qualifications to demonstrate capacity to design and construct the project.

IX. ZONING ANALYSIS

Dimensional requirements for this project are dictated by the B-2b community business zone.

Zoning Requirements	B-2b	Provided
Minimum Lot Size	None	10,692 sf
Minimum Street Frontage	20 ft	114 ft
Front Yard	Minimum: 0 ft Maximum: 10 ft	Varies: Min.: 0.5 ft Max.: 2.3 ft
Minimum Side Yard	5 ft or none on a side street	5 ft 8 ft (side street)
Minimum Rear Yard	10 ft	10 ft
Maximum Impervious Area	90%	90%
Maximum Structure Height	50 ft	50 ft
Parking	12 spaces: 1 space/ every 4 hotel rooms	17 spaces
Bicycle Parking	2 spaces per every 10 vehicle parking spaces	4 spaces

IX. DEVELOPMENT REVIEW

A. SITE PLAN SUBMISSION REQUIREMENTS (Section 14-527) and SUBDIVISION PLAT AND RECORDING PLAT REQUIREMENTS (Section 14-496)

The applicant has submitted a recording plat. The final plat will need to be revised to reflect any waivers and conditions of approval that relate to the subdivision plan. Any waivers granted must be recorded at the Registry of Deeds within two years of a Planning Board decision.

B. SUBDIVISION (Section 14-496)

The proposed development has been reviewed by staff for conformance with the relevant review standards of Portland's Subdivision Ordinance and applicable regulations. Staff comments are listed below.

1. *Will Not Result in Undue Water and Air Pollution (Section 14-497 (a) 1), and Will Not Result in Undue Soil Erosion (Section 14-497 (a) 4)*

   The existing site contains approximately 10,692 square feet of impervious surface. Redevelopment of the project site would result in a decrease of approximately 1,101 square feet of impervious area, to a total of 9,591 square feet. The project is not required to meet the General or Flooding Standards.

2. *Sufficient Water Available (Section 14-497 (a) 2 and 3)*

   Ability to serve from Portland Water District has been received and provided.

3. *Will Not Cause Unreasonable Traffic Congestion (Section 14-497 (a) 5)*

   The 46-room hotel is expected to generate 253 vehicle trips during an average weekday, and 19 trips during the PM peak hour.

   Mike Tremblay P.E., City Engineering, has provided several comments that are found in the attachments, and summarized below:

   While traffic impacts are not high enough to warrant a TMP, it should be noted that valet parking creates additional vehicle maneuvers. While the 2-way conversion of a portion of Neal Street is supported, it is not clear how vehicles will access the parking lot without going through the neighborhood or making a U-turn on Congress Street. The proposed circulation of entering vehicles is requested.

   Applicant's response:

   It is expected that guests arriving at the hotel in their own vehicle will proceed directly to the parking garage on Neal Street. The valet will be located at the entrance to the garage and will park the vehicle. Guests can enter the hotel lobby directly from the garage.

   The short-term drop-off/pick up spaces on Congress Street are intended to serve guests that are dropped off or picked up by taxi, uber, or other ride service. It is not anticipated that vehicles will regularly travel from the drop-off/pick up spaces on Congress Street to the parking garage on Neal Street. In the rare occasion that this happens, drivers will circle around through the neighborhood to access Neal Street.

4. *Will Provide for Adequate Sanitary Sewer and Stormwater Disposal (Section 14-497 (a) 6), and Will Not Cause an Unreasonable Burden on Municipal Solid Waste and Sewage (Section 14-497 (a) 7)*

A Wastewater Capacity Application has been approved by Brad Roland, P.E. Senior Project Engineer, at the City of Portland.

5. *Comprehensive Plan (Section 14-497 (a) 9)*

The development has been designed to be consistent with the Comprehensive Plan, adopted in June of 2017.

Portland's Plan 2030 includes the following policy goals:

Value and nurture Portland-based businesses.

B. SITE PLAN STANDARDS (Section 14-526)

The proposed development has been reviewed by staff for conformance with the relevant review standards of Portland's site plan ordinance and applicable regulations. Staff comments are listed below.

1. *Transportation Standards*

   a. Impact on Surrounding Street Systems and Access and Circulation

   The site is located on the corner of Neal & Congress Streets. Congress Street currently supports a significant amount of traffic. There is an anticipated decrease in traffic to and from the site, given the proposed transformation of a convenience store/gas station to a hotel. Vehicles will access the site and parking areas from existing access points. Two curb cuts on Congress Street would be closed and one of the curb cuts on Neal Street would be closed. Vehicle access would be provided via a new driveway off Neal Street. The primary building entrances are on the Congress Street sidewalk.

   b. Sidewalks

   Brick sidewalks exist along both Congress and Neal Streets and would be reconstructed in the vicinity of the proposed building. All sidewalk improvements shall conform to the City of Portland Technical Manual as shown on the project drawings.

   Mike Tremblay P.E., Senior Engineer, has provided the following comment:

   - *The material of the sidewalk appears to change to an alternate material (pavers or similar) in the vicinity of the building entrance. This is not acceptable within the City ROW. The sidewalk shall only consist of brick within the ROW.*

   Applicant's response:

   - *The applicant is proposing an area of granite pavers, approximately 6'x10', directly in front of the hotel entrance as an important design element. The pavers will encroach into the city right of way by approximately 3'. The applicant would like to work with the city to allow the pavers through a license agreement or other legal framework.*

c. Public Transit Access

Metro Bus Route 8 runs west on Congress Street in the vicinity of the project site. The nearest bus stop to the project site is at the intersection of Mellen and Congress Streets, approximately 300' east of the site.

d. Parking

The proposed project would provide 17 parking spaces on site. All parking spaces would be valet. One of the parking spaces is an ADA van-accessible space for loading. Additionally, there would be four parking spaces striped along the site's Congress Street frontage. The applicant proposes that two of these spaces be designated for hotel drop off with a 5-minute limit, and the other two be public parking with a 15-minute limit. Staff has reviewed this request and agree with proposed programming.

The proposed parking spaces are smaller than required per the dimensional standards. The applicant requests a waiver to allow the parking dimensions as shown on the site plan.

e. Bicycle Parking

The project requires 2 bicycle parking spaces for every 10 vehicle parking spaces, or 4 spaces. Bicycle parking would be provided at 2 bike hitches (2 spaces each) located in the Congress Street sidewalk.

2. Environmental Quality Standards

a. Preservation of Significant Natural Features

There are no known significant natural features on the site.

b. Landscaping and Landscape Preservation

A landscaping plan, prepared by Landscape Architect Anthony Muench, was submitted as part of the application. Three street trees are proposed along Congress Street, all specified as *Streetkeeper Honeylocust*. One existing street tree in poor health would be replaced. No street trees are proposed along Neal Street due to overhead power, width of sidewalk, and underground utilities. Instead, a variety of small trees, shrubs, and herbaceous plantings have been proposed surrounding the perimeter of the proposed building. Vegetated buffers between the proposed building and surrounding residential development is specified on the landscape plan.

c. Water Quality, Storm Water Management and Erosion Control

The existing site contains approximately 10,692 square feet of impervious surface. Redevelopment of the project site would result in a decrease of approximately 1,101 square feet of impervious area, to a total of 9,591 square feet. The project is not required to meet the General or Flooding Standards.

Post development stormwater runoff would generally follow existing patterns. Stormwater runoff from the proposed building and parking area would be collected in a proposed on-

site drainage system and conveyed to a new drain manhole in Neal Street that would connect to the existing City storm drain system in Neal and Congress Streets.

Lauren Swett, P.E. of Woodard and Curran Engineering, Third-Party Reviewer, has reviewed the applicants plans and project details, and offers the following comments:

- *All internal parking garage drainage from the proposed oil water separator must connect to the sanitary sewer, not to the stormdrain. This should be separated from roof drains that can connect to the stormdrain. If both roof and garage drainage connect to a combined sewer, the connections should be separate to facilitate future separation in the street.*
- *Stormdain pipes from private development sites are not allowed to connect into catch basins in the street and should connect directly to the stormdrain main. Pipes 8" or larger must connect to an existing manhole or install a new manhole on the main.*
- *It appears that the Applicant is changing the curbline location, and as a result at least one of the catch basins at the corner will no longer be a curb inlet basin. Justification of this change, and grading information to confirm that drainage will function properly at this corner should be provided.*
- *The stormdrain main is not shown on the plans. Two connections are proposed, but the main is not identified. Further confirmation of separate or combined systems in this area, and the location of the connections should be provided. Brad Roland may be able to provide additional information here.*

The applicant has responded to the comments above and updated the plans to reflect the necessary changes.

3. Public Infrastructure and Community Safety Standards

a. Public Safety and Fire Prevention

Emergency vehicle access would be via Congress and Neal Streets. The driveway entering the site from Neal street would be 20' wide.

Mike Thompson, Division Chief of the Fire Prevention and Community Outreach Division, has reviewed the submitted plans and found them to be acceptable, noting the following points (Attachment 1):

- *The Fire Department approves C-3.0 SITE PLAN.pdf*

b. Availability and Adequate Capacity of Public Utilities

The project would be served by Central Maine Power, the Portland Water District, City Department of Public Works.

Overhead electrical and telecommunications utilities exist along Neal and Congress Streets. The proposed building would be served by underground utilities from Pole #J18 located west of the site on Neal Street.

An ability to serve letter has been requested from the Portland Water District, and a Wastewater Capacity Application has been approved by Brad Roland, P.E., Senior Project Engineer, at the City of Portland.

4. Site Design Standards

a. Snow and Ice Loading

The proposed building would have a flat roof. Accumulated snow and ice would not fall onto adjacent properties or public ways.

b. View Corridors

The project site is located outside of any protected view corridors.

c. Historic Resources

The development is located within a designated historic district and review is under way with the City of Portland Historic Preservation.

On Wednesday December 4, 2019, the Applicant went before the Historic Preservation Board for its second workshop. The HP Board is supportive of the project and appreciates the design changes made based on feedback received from the first workshop. The project will now go to an HP hearing.

d. Exterior Lighting

Exterior site lighting would be provided by building mounted lights along sidewalks and in parking areas. All fixtures would feature full cut-off optics to prevent unintended light pollution. Proposed lighting is shown on the Lighting Photometric Plan (Sheet P-1).

No architectural or specialty lighting is proposed.

No up-lighting is proposed.

No street lighting is proposed. An existing overhead cobra style streetlight exists on a pole at the intersection of Congress and Neal Streets.

Caitlin Cameron, City of Portland Urban Designer, reviewed the plans and offered a number of comments which the applicant has since addressed.

e. Noise and Vibration

The proposed building would have ERV (Energy Recovery Ventilator) fans located on the roof that would not be visible from Congress or Neal Streets, or adjacent sites. Noise levels are expected to meet the permitted levels for the B-2b Zone.

f. Signage and Wayfinding

All signage shall meet the requirements of the Manual on Uniform Traffic Devices (MUTCD) and Division 22 of the City Code. The proposed hotel and commercial signage can be seen on the architectural renderings.

g. Zoning Related Design Standards

The project is located within a historic zone and review is under way with the City of Portland Historic Preservation.

h. Construction Management Plan

The construction management plan has been reviewed by city staff and deemed sufficient.

C. INCLUSIONARY ZONING – Conditional Use (Section 14-487)

All hotel project consisting of ten (10) or more guest rooms for rent are conditional uses subject to Planning Board review on the condition that they comply with the requirements set forth in Division 30, Sections 14-487 and 14-488.1 of the Zoning Ordinance.

Division 30, Section 14-488.1, Inclusionary Zoning for Hotel Projects, requires the creation of at least one unit of low-income housing for rent in the city of Portland for every 28 rooms in the hotel project. The low-income units must meet the standards outlined in Section 14-487 and in the implementing regulations governing low-income units. This number of hotel rooms used to calculate the required units shall be rounded up to the nearest increment of 28 rooms.

The development located at 754 Congress Street proposes the creation of 46 guest rooms for rent. Based on the requirements outlined in Section 14-488. 1, the development is required to provide a minimum of 2 low-income housing units in the City of Portland or pay a fee-in-lieu of $3,806 per hotel guest room. The Applicant has elected to pay the fee-in-lieu of $175,076. The Applicant's payment of the fee-in-lieu will satisfy the minimum requirements set forth in Section 14-487.

Staff recommends the Board Approve this hotel project on the condition that the Applicant remit a payment of $175,076 to the City before a Certificate of Occupancy may be issued.

XII. NEXT STEPS

1. Address staff comments
2. Address additional comments of the Planning Board
3. Prepare final plan submission, including subdivision and site plan submittal requirements as included in 14-496(1) and (b) and 14-527(e) and (f) for review by the Planning Board
4. Hold Planning Board Hearing

XIII. ATTACHMENTS
PLANNING BOARD REPORT ATTACHMENTS

1. Inclusionary Zoning Review Comments

APPLICANT'S SUBMITTALS

A - DEVELOPMENT DESCRIPTION
B - RIGHT, TITLE & INTEREST
C - STATE & FEDERAL PERMITS
D - LAND ORDINANCE REVIEW
E - EASEMENTS OR OTHER BURDENS
F - TECHNICAL & FINANCIAL CAPACITY
G - CONSTRUCTION MANAGEMENT PLAN
H - NATURAL FEATURES
I - STORMWATER MANAGEMENT
J - CONSISTENCY WITH CITY MASTER PLANS
K – UTILITIES
L - SOLID WASTE
M - FIRE SAFETY
N - CONFORMITY WITH APPLICABLE DESIGN STANDARDS
O - NEIGHBORHOOD MEETING NOTES
P - COMMENT RESPONSE LETTER-2019-10-29
Q - COMMENT RESPONSE LETTER-2019-12-5
R - CONDITIONAL USE INCLUSIONARY ZONING
S - CHECKLIST- LEVEL 2 & 3
T - WAIVER TABLE
U - PROJECT SUMMARY
V - WASTEWATER CAPACITY AUTHORIZATION
W - ZONING ANALYSIS TABLE

PLANS

P1. COVER
P2. GENERAL NOTES
P3. EXISTING CONDITIONS & DEMO PLAN
P4. SITE PLAN
P5. GRADING DRAINAGE & EROSION
P6. UTILITY PLAN
P7. SITE DETAILS
P8. UTILITY & DRAINAGE DETAILS
P9. PLANTING & SITE LIGHTING DETAILS
P10. LANDSCAPE PLAN
P11. PHOTOMETRIC LIGHTING PLAN
P12. CONSTRUCTION MANAGEMENT PLAN
P13. BOUNDARY & TOPOGRAPHIC SURVEY
P14. AREA VIEW
P15. AXON VIEWS
P16. ELEVATIONS
P17. MEZZANINE
P18. BASEMENT PLAN
P19. GROUND FLOOR PLAN

P20. SECOND FLOOR PLAN
P21. THIRD FLOOR PLAN
P22. FOURTH FLOOR PLAN
P23. ROOF PLAN
P24. RENDERING 1
P25. RENDERING 2
P26. RENDERING 3

Portland, Maine Yes. Life's good here.

Planning & Urban Development Department

To: Andrew Tufts, Planner, Planning & Urban Development Department

From: Victoria Volent, Housing Program Manager, Housing & Community Development Division

Date: November 21, 2019

Subject: 754 Congress Street – Inclusionary Zoning for Hotel Projects Conditional Use

---

All hotel project consisting of ten (10) or more guest rooms for rent are conditional uses subject to Planning Board review on the condition that they comply with the requirements set forth in Division 30, Sections 14-487 and 14-488.1 of the Zoning Ordinance.

Division 30, Section 14-488.1, Inclusionary Zoning for Hotel Projects, requires the creation of at least one unit of low-income housing for rent in the city of Portland for every 28 rooms in the hotel project. The low-income units must meet the standards outlined in Section 14-487 and in the implementing regulations governing low-income units. This number of hotel rooms used to calculate the required units shall be rounded up to the nearest increment of 28 rooms.

The development located at 754 Congress Street proposes the creation of 46 guest rooms for rent. Based on the requirements outlined in Section 14-488. 1, the development is required to provide a minimum of 2 low-income housing units in the City of Portland or pay a fee-in-lieu of $3,806 per hotel guest room. The Applicant has elected to pay the fee-in-lieu of $175,076. The Applicant's payment of the fee-in-lieu will satisfy the minimum requirements set forth in Section 14-487.

Staff recommends the Board Approve this hotel project on the condition that the Applicant remit a payment of $175,076 to the City before a Certificate of Occupancy may be issued.

Sincerely,

Victoria Volent
Housing Program Manager

1 DEVELOPMENT DESCRIPTION

1.1 OVERVIEW

CenterWest, LLC intends to construct the 4-story Longfellow Hotel on a 10,692 square foot parcel located at 754 Congress Street at the corner of Congress and Neal Streets in Portland's West End. The proposed building will include 46 hotel rooms, a commercial space on the first floor, and a spa. The project site is owned by S&A 786 Holding LLC and is depicted on the City of Portland Assessor's Map 54, Block G, as lots 1, 2 and 3. It is located in the B-2b zone. The site is currently developed with an existing gas station convenience store building and paved parking areas.

1.2 PROJECT PURPOSE AND NEED

The proposed project includes redevelopment of a previously developed lot in an area that has utility infrastructure in place and will provide hotel and commercial spaces that are compatible with the existing neighborhood. The proposed project will redevelop a site that is nearly entirely developed with pavement, close many of the existing curb cuts, and create a new brick sidewalk along Congress and Neal Streets.

Inclusionary Zoning requirements will be satisfied by the fee in lieu.

1.3 EXISTING CONDITIONS

The existing site is located on the eastern corner of Congress and Neal Streets in Portland's West End neighborhood and is developed with an existing 1-story gas station convenience store and paved parking area. The entire site is covered with impervious surface. Underground utilities in Congress and Neal Streets include water, gas, and sewer. Overhead power and telecom services are on poles located on Congress and Neal Streets.

The site's Congress Street frontage has brick sidewalks with granite curb and two large paved curb cuts. There is one on-street parking space along the site's frontage. A concrete ramp is located at the corner of Congress and Neal Streets. The site's Neal Street frontage has concrete sidewalks with granite curb and two concrete driveway aprons. There is no on-site parking on the site's Neal Street frontage, but there are three parking spaces located on the opposite side of Neal Street in the site's vicinity. Neal Street is currently one way coming off Congress Street. The Congress Street sidewalk also features one small street tree. The Neal Street sidewalk includes two utility poles, one of which houses a cobra head style street light. Vehicular access to the site is through 2 curb cuts on Congress Street and 2 curb cuts on Neal Street. The street conditions are as follows:

Street Name	Description	On-street Parking	Sidewalk	Notes
Congress Street	Approximately 43' wide paved public way. Two-way traffic in two lanes.	Yes, parallel both sides.	Brick both sides.	Two large paved curb cuts.
Danforth Street	Approximately 26' wide paved public way. One-way traffic in one lane.	Yes, parallel one side.	Concrete along site, brick opposite side.	Two large concrete curb cuts.

Congress Street abuts the site to the north, commercial property owned by Kaplan 742 LLC abuts the site to the east, a parking lot and brick building owned by H. Page & Patricia G. Burnham abuts the site to the South, and Neal Street abuts the site to the west.

The site has an elevation change of approximately 5' across the parcel. It generally slopes from south to north. An existing concrete retaining wall bounds the site to the south and will remain. The site to the south is at a higher elevation that the project site. Photos of the existing site are provided in Attachment 1-A.

1.4 PROPOSED DEVELOPMENT

The development program includes the following components:

1.4.1 ON-SITE

A new four-story building with a footprint of 8,145 square feet will be constructed on the site to provide 46 hotel rooms, a ground floor commercial space, and a spa. The new building will feature ground floor parking beneath a portion of the building. Today there are many curb cuts along Congress and Neil Streets that will be closed as part of this project. One curb cut will provide vehicular access to the site from Neal Street. The parking will all be valet.

The ground floor of the proposed building will house the Longfellow Hotel lobby, a commercial space, and a portion of the spa. The hotel rooms will be located on the second through fourth floors. The spa will also be located in the basement level, mezzanine level, and third floor. A gym will be located on the second floor, and a library will be located on the fourth floor. Both the spa and the commercial space will have on-site outdoor areas at the ground level. The proposed project is within the B-2b zone. Elevation views and perspective renderings of the proposed building are provided in Attachment 1-B.

Both the Longfellow Hotel lobby and the commercial space will be accessed from the Congress Street sidewalk. Bicycle storage will be provided at bike hitches along the Congress Street frontage. A solid waste storage area is proposed on the first floor and will be accessed from the covered parking area. Utility rooms will also be located on the first floor adjacent to the parking area as shown on the architectural plans.

1.4.2 OFF-SITE IMPROVEMENTS

The applicant is proposing improvements to the Congress and Neal Street sidewalks along the project site including an improved vehicular entrance to the project site. The sidewalks will be reconstructed with brick, curb cuts will be closed, and vehicle access will be restricted to one driveway on Neal Street. The Congress Street sidewalk ramps on both sides of Neal Street will be re-built. The beginning of Neal Street off Congress Street will be converted to two-way so vehicles leaving the hotel parking can access Congress Street without driving through the Brackett Street neighborhood.

1.5 TRAFFIC

The 46-room hotel is expected to generate 253 vehicle trips during an average weekday, and 19 trips during the PM peak hour. Trip generation data was taken from the ITE Trip Generation Manual, web-based application; trip calculations are found below:
Multifamily Housing (Mid-Rise)

- 5.49 trips/unit on an average weekday * 46 units = 252.5 trips/weekday
- 0.42 trips/unit during the PM peak hour * 46 units = 19.1 trips/PM peak hr

The relatively small amount of traffic that will be generated by the project is not expected to have a significant effect on the surrounding street network.

1.6 PARKING

Per ordinance requirements in the B-2b Zone, the proposed project is required to have a total of 12 spaces:

- 46-hotel rooms require 1 space/every 4 hotel rooms = 12 spaces

The project will have 17 parking spaces within the surface parking lot on-site. The parking will be valet. One space is ADA van-accessible for unloading. Two of the parallel parking spaces on Congress Street in front of the hotel will be designated as hotel drop off spaces with a 5-minute limit. The other two parallel parking spaces on Congress Street will be public parking. The applicant proposes that these spaces have a 15-minute limit.

Three parking spaces will be removed on Neal Street to make the beginning of the street two-way. One parking space will be removed on Congress Street. Four new parking spaces will be created along Congress Street.

Four bicycle parking spaces are also required, which will be provided at bike hitches along the Congress Street frontage.

1.7 UTILITIES AND STORMWATER

The proposed project will include the installation of new utility services to the proposed building. All new utility services will be provided from the existing utilities available within Congress and Neal Streets. The proposed locations of the new utility services are shown on the Utility Plan (Sheet C-5.0). More information on proposed utility services is provided in Section 11 of this application.

Post-development stormwater runoff will closely follow existing runoff patterns. Runoff from portions of the site and the proposed building roof will enter the proposed on-site stormdrain system before connecting to existing drainage infrastructure in Congress and Neal Streets. The proposed project results in a decrease of impervious area on site. More information on stormwater runoff from the site is provided in Section 9 of this application.

1.8 ATTACHMENTS

Attachment 1-A – Existing Site Photographs
Attachment 1-B – Building Elevation Views & Renderings

ATTACHMENT 1-A

Existing Site Photographs



Photo 1 – 754 Congress Street site and sidewalk along Congress Street, looking westerly.



Photo 2 – Intersection of Congress Street and Neal Street, looking westerly.



Photo 3 – Neal Street sidewalk and project site, looking southerly.



Photo 4 – Retaining wall and abutting property south of the site, looking southeasterly.

ATTACHMENT 1-B

Building Elevation Views & Perspective Renderings

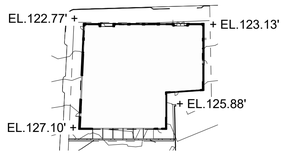

GENERAL NOTES:

1. AVERAGE GRADE BY DEFINITION: GRADE TAKEN AT THE FOUR (4) BUILDING CORNERS DIVIDED BY FOUR (4) - 122.77' + 123.13' + 125.88' + 127.1'= 498.88' /4 = 124.72'

2. BUILDING HEIGHT: THE VERTICAL MEASUREMENT FROM AVERAGE GRADE TO HIGHEST POINT OF THE ROOF BEAMS = 50' - 0"



5 | NORTH ELEVATION - CONGRESS ST.
1/8" = 1'-0"



2 | WEST ELEVATION - NEAL ST.
1/8" = 1'-0"



4 | SOUTH ELEVATION
1/8" = 1'-0"



3 | SOUTH ELEVATION 2
1/8" = 1'-0"



1 | EAST ELEVATION
1/8" = 1'-0"

Architect:
ARCHETYPE ARCHITECTS
48 Union Wharf Portland, Maine 04101
(207) 772-6022 Fax (207) 772-4056

Consultant:

Prepared For:
Owner

Project:
754 CONGRESS
754 Congress Street
Portland, Maine

Revisions:

Scale:
As indicated

Date:
SEP 12, 2019

BUILDING ELEVATIONS

A2.01


The
PORTLAND MAINE
LONGFELLOW
HOTEL
EST. 2020
LONGFELLOW
BAKERY
COFFEE
BAKERY

2 RIGHT, TITLE and INTEREST

2.1 OVERVIEW

The applicant is CenterWest, LLC and the owner is 786 Holding LLC by deed recorded in the Cumberland County Registry of Deeds in book 29094 page 171. A copy of the property deed is attached in attachment 2-A.

2.2 ATTACHMENTS

Attachment 2-A – Property Deed

ATTACHMENT 2-A

Title, Right, or Interest Documentation

QUITCLAIM DEED

C.N. BROWN COMPANY, a corporation duly organized and existing under the laws of the State of Maine, having its principal office in South Paris, Oxford County, Maine, for consideration paid grants to **S & A 786 HOLDING LLC** a Maine Limited Liability Company having an address of 754 Congress Street, Portland, Maine, 04102, with **QUITCLAIM COVENANTS**:

"A certain lot or parcel of land together with the building and improvements thereon, situated at the Southeast corner of Congress Street and Neal Street in the City of Portland, County of Cumberland and State of Maine and further bounded and described as follows:

MAINE REAL ESTATE TAX PAID

Beginning at a monument at the Southeast corner of Congress Street and Neal Street; thence from said point of beginning and by said Neal Street South 42° 30' West, one hundred and no hundredths (100.00) feet to land conveyed by the California Oil Co. to Reuben Katz by deed recorded in Cumberland County Registry of Deeds in Book 2922, Page 148; thence by said Reuben Katz land on the following described courses and distances; South 50° 03' East, eight-eight and twenty-five hundredths (88.25) feet to a point; thence North 38° 10' East, thirty and eighty hundredths (30.80) feet to a point; thence South 53° 59' 30" East, thirty-two and sixty-eight hundredths (32.68) feet to land conveyed by Shapiro's Oil and Appliance Co. to Kernco, Inc. by deed recorded in said Registry of Deeds in Book 2883, Page 186; thence by said Kernco, Inc. land North 38° 53' East, sixty-eight and thirty-three hundredths (68.33) feet to Congress Street; thence by said Congress Street on the following described courses and distances; North 52° 25' West, forty-seven and sixty-two hundredths (47.62) feet to an angle point; thence North 49° 36' West, sixty-six and fifty-eight hundredths (66.58) feet to the point of beginning.

Said above described courses are magnetic. Due to strong local attractions, a date for deflection correction is not possible.

Said above described lot contains 10,693 square feet."

Meaning and intending to convey all and the same conveyed to C. N. Brown Company by Bramhall Corporation by deed dated December 15, 1992 and recorded in the Cumberland County Registry of Deeds at Book 10475, Page 210, from which deed the above quoted description is taken.

Witness the hand of Jinger Duryea, President of C. N. Brown Company, thereunto duly authorized, this 1 day of November, 2011.

C. N. BROWN COMPANY

Witness

By: Jinger Duryea, President - PRESIDENT

STATE OF MAINE

OXFORD, SS. November 1, 2011

Personally appeared Jinger Duryea, President of C. N. Brown Company and acknowledged the foregoing instrument to be her free act and deed, acting in said capacity, and the free act and deed of said corporation.

Before me, Shari O'Connor

Type or Print Name of Notary: SHARI S. O'CONNOR
Notary Public, Maine
My Commission Expires July 19, 2016

My Commission Expires:

SEAL

Received
Recorded Register of Deeds
Nov 03,2011 10:25:56A
Cumberland County
Pamela E. Lovley

Cnbrown.salesartajsingh.quitclaim deed

3 STATE AND FEDERAL PERMITS

The development is subject to Site Plan approval by the City of Portland and Building Permit(s) are also required. No additional State or Federal Permits are required.

4 LAND ORDINANCE REVIEW

4.1 OVERVIEW

The property currently lies within the City of Portland B-2b zone. The following Space and Bulk requirements apply to the B-2b Zone:

B-2b Zone Summary Dimensional and Parking Requirements Applied to 754 Congress Street		
Zoning Requirements	B-2b	Provided
Minimum Lot Size	-	10,692 sf
Minimum Street Frontage	20 ft	114 ft
Front Yard	Minimum=0 ft Maximum=10 ft	Varies: Min=0.5 ft Max=2.3 ft
Minimum Side Yard	5 ft, or none on a side street	5 ft 8 ft (side street)
Minimum Rear Yard	10 ft	10 ft
Maximum Impervious Area	90%	90%
Maximum Structure Height	50 ft	50 ft
Parking	12 spaces: 1 space/every 4 hotel rooms	17 spaces
Bicycle Parking	2 spaces per every 10 vehicle parking spaces	4 spaces

4.2 SHORELAND ZONING

The site is not located within the Shoreland Zoning District.

5 EASEMENTS OR OTHER BURDENS

5.1 OVERVIEW

Owen Haskell, Inc. completed a boundary and topographic survey of the site in June of 2019. No easements were found as part of this survey.

6 TECHNICAL AND FINANCIAL CAPACITY

6.1 TECHNICAL CAPACITY

The applicant has assembled a highly qualified team of professionals to plan, permit, and develop construction documents for the project. The Team is working under the direction of CenterWest, LLC as Project Developers. The Team services will be provided by the following companies and their respective team leaders:

6.2 CONSULTANT TEAM

Civil Engineer	Michael Tadema-Wielandt, P.E. Terradyn Consultants, LLC 565 Congress Street Portland, ME 04101 (207) 632-9010 – Cell (207) 221-1317 – Fax mtw@terradynconsultants.com
Surveyor	John C. Schwanda Owen Haskell, Inc. 390 US Route 1, Unit 10 Falmouth, Maine 04105 (207) 774-0424 – Work (207) 774-0511 – Fax jschwanda@owenhaskell.com
Architect	David Lloyd Archetype, PA 48 Wharf Street Portland, ME 04101 (207) 772-6022 – Work (207) 772-4056 – Fax lloyd@archetypepa.com

6.3 EXPERIENCE OF PROJECT TEAM

The team of consultants retained by the Developer has expertise and experience in the design of similar projects. Resumes of key personnel for the development team can be provided upon request.

The applicant, CenterWest, LLC, has extensive experience in the development and management of hotel projects of this scale. CenterWest, LLC is made up of Nate DeLois and other members of Uncommon Hospitality who developed and manage The Francis Hotel in Portland and other hotels in southern Maine.

6.4 FINANCIAL CAPACITY

The applicant is working with multiple banks on funding options and a commitment letter indicating financial capacity will be provided to the City when obtained.

6.5 CONSTRUCTION COST ESTIMATE

The project has an overall construction cost estimate of 9 million dollars. This construction cost value is considered preliminary and subject to change as building design and project layout is refined, etc.

7 CONSTRUCTION MANAGEMENT PLAN

The following information is provided in accordance with the City of Portland Code of Ordinances Chapter 14 Land Use, Section 14-527(g)(1).

7.1 CONSTRUCTION MANAGEMENT PLAN

CenterWest, LLC is seeking to commence construction of the Longfellow Hotel project in April 2020 and complete work by the following April in 2021. The construction will involve site work and new building construction. The attached construction plan outlines the anticipated timeline and sequence of activities.

7.2 ATTACHMENTS

Attachment 7-A – Construction Management Plan

ATTACHMENT 7-A

Construction Management Plan

CONSTRUCTION MANAGEMENT PLAN

Project:
Longfellow Hotel
754 Congress Street
Portland, Maine 04102

Applicant:
CenterWest, LLC
795 Congress Street
Portland, Maine 04102

Prepared By:
Terradyn Consultants, LLC
565 Congress Street, Suite 201
Portland, Maine 04101

Construction Manager:
Hebert Construction

A. Construction Management Principles

The following narrative provides an overview of the construction management principles that the Applicant has identified to minimize impacts from the construction of the Longfellow Hotel, such as noise, vibrations, ground movement, truck traffic, and other construction related factors to the surrounding buildings and communities.

B. Performance Guarantees, Inspection Fees, Preconstruction Meeting, and Permits

Prior to scheduling a preconstruction meeting and the issuance of any city required permits, the Applicant and Contractor shall meet all of the requirements contained in Section 14-530. Development review fees and post approval requirements and 14-532. General requirements and enforcement of Portland's Land Use Code.

Other permits, as applicable, include

1. **Street Opening and Street Occupancy Permits:** Construction activity in the public right-of-way are controlled by Chapter 25 and sewer and stormwater system connections are controlled by Chapters 24 and 32 of the Land Use Code. All required permits shall be obtained through the Department of Public Works and the requests shall conform with the approved construction management plan.

C. Construction Administration and Communication

The Applicant and Contractor will work diligently to implement a communication strategy as outlined below. The communication strategy is intended to ensure that all construction operations are performed in accordance with all agreements, ordinances and special permits applicable to this project. The Construction Manager will work closely with adjacent abutters, businesses and all parties informed, as far in advance as possible, of scheduled work, particularly work anticipated to cause significant noise, vibrations, or dust.

A Construction Manager has not been selected for the project yet. Once selected, a Contact Person, who will be available 24 hours in the event of an emergency, will be identified and the City shall be notified:

CONTACT PERSON:
Hebert Construction

Construction Signage shall be posted at the site with Contact Information for the Contractor. Construction site signage shall be removed at project completion.

D. Construction Schedule

1. The contractor shall submit a schedule or time line for the construction project, including any Phasing, prior to construction. The project is anticipated to start construction in April 2020.
2. Hours of Construction: Construction may occur during the daytime hours as defined in Section 17-18 of the City Code (Construction Activities) and Section 25-129 of the City Code (Noise, dust and debris).
3. Extended Hours or Night Work: Pursuant to Section 17-18, this section does not apply to emergency utility work or "Situations where the public works authority or the office of building inspections determines that the construction activity is of a unique character which cannot reasonably be completed or performed during the permitted hours and which is not of a recurring nature, provided that prior to engaging in such activity the contractor or his representatives gives notice of the time and scope of such proposed activity, the notice to be given in a manner approved by the public works authority."
4. Material Deliveries: Delivery of materials shall take place during the Hours of Construction listed above and shall be stored on the project site in the locations noted on the Construction Management Plan (Sheet C-2.1).

E. Security & Public Safety

1. The Contractor shall erect the temporary barriers and access gates shown on the Construction Management Plan (Sheet C-2.1) with the intent of separating pedestrian and vehicle circulation from the construction site.
2. The Applicant or Contractor shall purchase and install a knox padlock from the Portland Fire Department to allow access by the Portland Fire Department at the primary access gate.
3. Structures undergoing construction, alteration, or demolition operations, including those in underground locations, shall comply with NFPA 1 Chapter 16. *Safeguarding Construction, Alteration, and Demolition Operations.*

4. Fire Safety Program. An overall construction of demolition fire safety program shall be developed. Essential items to be emphasized include the following:
    - Good Housekeeping
    - On-site security
    - Installation of new fire protection systems as construction progresses
    - Preservation of existing systems during demolition
    - Organization and training of an on-site fire brigade
    - Development of a pre-fire plan with the local fire department
    - Rapid communication
    - Consideration of special hazards resulting from previous occupancies
    - Protection of existing structures and equipment from exposure fires resulting from construction, alteration, and demolition operations
5. Any temporary security lighting fixtures shall feature full cutoff optics to reduce light trespass onto abutting properties.

F. Construction Permitting and Traffic Control Plans

1. Construction Activity in Public Streets: Construction activity in the public right-of-way is controlled by Chapter 25 Article VII of the City Code of Ordinances. Required licenses and permits, restrictions on activity, and fees & area are outlined in that Chapter. Rules and Regulations for Excavation Activity are available through the Street Opening Clerk at the Department of Public Works. At no time can construction activity including delivery vehicles close or block streets or affect public safety access without prior notice and approval of the Department of Public Works.
2. Lane Closures: Underground electric, sewer and water system connections within Congress and Neal Streets are expected to result in temporary closure of one lane of traffic in each street for up to four days. All work resulting in lane closures shall be scheduled and sequenced to minimize the duration of street occupancy.
3. Public Sidewalk Closures: The Congress and Neal Street sidewalks along the project site's frontage will be reconstructed as part of the proposed project. These sections of sidewalk will be closed while being reconstructed and for the duration of the proposed building construction. Temporary pedestrian signage will direct pedestrians to cross Neal Street at existing crosswalks and use the sidewalk on the opposite side of Neal Street, as shown on the Construction Management Plan. A temporary sidewalk along Congress Street will be created with jersey barrier type channeling devices and temporary pedestrian signage will direct pedestrians to use this walkway. No other existing sidewalks are proposed to be impacted by the project.

4. Sewer and Stormwater: Sewer and stormwater system connections are controlled by Chapters 24 and 32 of the City Code of Ordinance. Required permits for new connections are available through the Street Opening Clerk at the Department of Public Works. Rules and Regulations for these utility systems are available through the City Engineer's office of the Department of Public Works and in Section II of the Technical Manual.
5. Work within City Right of Way: Construction activity that impacts the existing public street system must be controlled to protect the safety of the construction workers and all modes of the traveling public.

   Construction operations shall provide for the safe passage of the public through or along the construction work zone. On a case-by-case basis, the Contractor may be allowed to close a street and/or detour a mode of traffic when absolutely necessary for safety. The Contractor shall employ the appropriate techniques and devices as called for in the latest edition of the Manual on Uniform Traffic Control Devices (MUTCD). In addition:

   - Construction speed signing may be used as needed to slow traffic
   - Traffic Control signs shall not be placed where they are an obstruction to bicycles or pedestrians.
   - In extreme situations, flaggers may be required.
   - Police detail is required at lighted intersections and may be requested by the City's transportation engineer or his designee.

   All existing modes of travel in work zone area shall be accommodated if impacted by the activity. The safe passage of pedestrians, bicyclists, transit providers, and motorists are of equal importance when planning out the work zone; no pre-existing travel mode may be eliminated without the express approval of the Department of Public Works.

   - Traffic control bicycle and pedestrian facilities or routes through work zones shall be maintained until the bicycle and pedestrian facilities or routes are ready for safe operation. Traffic control will not be removed to allow auto travel at the expense of bicycle and pedestrians.
   - Barrier systems utilized to separate the construction activity from the public street and /or sidewalk shall not inhibit sight distances, particularly for visibility of pedestrians and bicyclists.
   - ADA compliance shall be maintained.
   - Use of public parking spaces or the blockage of any portion of sidewalk for the purpose of construction activity shall require an occupancy permit and appropriate fee as assessed by the Department of Public Works.

G. Site Management and Controls

The contractor shall be responsible for maintaining the site in a safe condition and including the following:

1. A solid waste dumpster shall be located on site for the disposal of trash and debris.
2. The Congress Street and Neal Street rights of way shall be swept regularly to control the tracking of mud onto adjacent public streets.
3. Dust controls: The construction shall comply with Portland's requirements under Section 25-129 on Noise, dust and debris.
4. Noise: The construction shall comply with Portland's requirements under Section 17-18 of the City Code and Section 25-129 on Noise, dust and debris.
5. Rodent Control will be provided, if applicable, by a professional exterminator and consistent with Chapter 22 of the City Code.
6. Snow Removal: Pursuant to Section 25-173 Contractors to ensure a safe means of travel within the work zone.
    1) Snow/ice removal or commence automatically from (1" of snow and up) or Ice
    2) Remove snow as needed within the work zone, including parking spaces & not to block any driveways or site lines with the piles of snow.
    3) Clear all walks & ramps with the work zone
    4) Sand or Salt as needed
    5) Clear all basin or drainage to help snow melt
    6) This would include Monday-Friday Sat/Sunday/Holidays

H. Erosion Control and Preservation of Trees

1. The Contractor shall install all erosion and sedimentation controls as depicted on the approved erosion and sedimentation control plan prior to the pre-construction meeting for inspection by the City. The Contractor shall regularly inspect the control measures, no less than weekly and after significant storm events, and maintain any installed temporary or permanent stormwater management systems in working order. The Contractor shall document all inspection activities and corrective actions and be prepared to provide these documents for inspection by the City, Maine Department of Environmental Protection or the U.S. Environmental Protection Agency upon request.
2. The storage of materials shall be located in the areas depicted on the Construction Management Plan (Sheet C-2.1).

I. Construction Staging and Deliveries

1. A location for material storage and lay down is shown on the Construction Management Plan. Additional areas may be utilized as available as long as they do not interfere with material deliveries.

J. Parking During Construction

1. Construction Parking: Construction workers shall utilize on-site parking as shown on the Construction Management Plan. Additional off-site off-street parking shall be utilized if necessary. Construction workers shall abide by all posted on-street parking restrictions.

8 NATURAL FEATURES

8.1 OVERVIEW

The development site has been entirely developed and does not contain any significant natural features including wetlands, vernal pools or other protected resources or wildlife habitats.

9 STORMWATER MANAGEMENT

The following information is provided in accordance with the City of Portland Code of Ordinances Chapter 14 Land Use, Section 14-526(b)(3).

9.1 OVERVIEW

The existing project site is entirely developed and slopes from the southern property boundary adjacent to the retaining wall in a northerly direction towards Congress Street. Stormwater runoff from the project site drains overland across the northern property boundary to existing storm drain networks within Neal and Congress Streets.

Post development stormwater runoff will generally follow existing patterns. Stormwater runoff from the proposed building and parking area will be collected in a proposed on-site drainage system and conveyed to a new drain manhole in Neal Street that will connect to the existing City storm drain system in Neal and Congress Streets. Stormwater runoff from the patio and vegetated areas southeast of the building outside the spa area will be captured in a new catch basin and conveyed to the City storm drain system in Congress Street. Stormwater runoff from the sidewalk areas will continue to flow overland into the existing City storm drain system in Congress and Neal Streets as it does today. Runoff from the proposed building roof will be collected in a roof drain and discharged to the proposed on-site stormdrain network.

The existing project site contains approximately 10,692 square feet of impervious surface. Redevelopment of the project site will result in approximately 9,591 square feet of impervious area, which is a decrease of approximately 1,101 square feet of impervious area. Because the proposed building will be located where parking areas exist today, the proposed project will result in a decrease of non-roof impervious area. Therefore, the project is not required to meet the General or Flooding Standards, and does not meet the threshold for redevelopment standards.

The project is not expected to cause ponding, flooding, or erosion problems on or downstream of the site. The relatively small amount of runoff entering the city’s storm drain network is not expected to overburden the system.

10 CONSISTENCY WITH CITY MASTER PLANS

10.1 OVERVIEW

Our office is not aware of any applicable Master Plans created for the project site.

11 UTILITIES

11.1 OVERVIEW

The proposed project will involve installation of new utility services to the proposed building. All new utility services will be provided from the franchise utilities available within Congress and Neal Streets. The proposed locations of the new utility services are shown on the Utility Plan (Sheet C-5.0).

11.2 WATER SUPPLY

The proposed project will receive its water supply from the Portland Water District's (PWD) public water supply system. Separate fire and domestic services will be installed to the building from PWD's existing main in Neal Street. Terradyn Consultants submitted the attached letter to PWD requesting an ability to serve on September 17, 2019.

11.2.1 Total Project Water Usage

The total average daily water demand for the proposed hotel building is estimated to be 5,260 gallons per day, based on design flows published in the State of Maine Subsurface Wastewater Disposal Rules.

46	x Hotel Room with private bath at 100 gpd/unit	= 4,600 gpd
5	x Hotel Employee at 12 gpd/employee	= 60 gpd
20	x Eating Place, 3 meals/day at 30 gpd/seat	= 600 gpd
	Total	= 5,260 gpd

11.3 WASTEWATER DISPOSAL

The proposed project will be connected to the Portland Water District's and City of Portland's wastewater collection and conveyance systems. The City of Portland Wastewater Capacity Application has been completed and uploaded to the City's electronic plan review system for review by Brad Roland of the City's Water Resources Department. A copy of the application is included in Attachment 11-B.

The 46-room hotel with commercial space is anticipated to generate an average daily flow of approximately 5,260 gpd. Based on the existing sewer system in the area, there appears to be adequate capacity to handle these projected flow amounts.

11.4 ELECTRICITY SUPPLY

CMP currently maintains overhead and underground utilities in the area. Electric utilities for the proposed building will be installed underground from Pole #J18 on Neal Street.

11.5 ATTACHMENTS

Attachment 11-A – Portland Water District Ability to Serve Correspondence
Attachment 11-B – City of Portland Wastewater Capacity Application

ATTACHMENT 11-A

Portland Water District Ability to Serve Correspondence

TERRADYN
CONSULTANTS, LLC
Civil Engineering - Land Planning - Stormwater Design - Environmental Permitting

1923

September 17, 2019

MEANS
means@pwd.org
Portland Water District
225 Douglass Street
Portland, ME 04104

Request for Ability to Serve Letter
Longfellow Hotel
754 Congress Street, Portland, Maine

Dear Sir or Madam:

Terradyn Consultants LLC has been retained by CenterWest, LLC to assist with site design and permitting for a hotel project located at 754 Congress Street in Portland, Maine. The project includes the construction of a 4-story hotel, known as Longfellow Hotel, resulting in 46 hotel rooms, a commercial space, and a spa. The proposed project will include separate water services for domestic and fire suppression use. We are writing to request a letter confirming the Portland Water District's ability to serve the proposed development.

The 10,692 square foot parcel is identified as Block G, Lots 1, 2 and 3 on the City of Portland Tax Map 54. The site is at the corner of Congress and Neal Streets. One existing convenience store building exists on site and will be removed as part of this project.

The proposed project includes the construction of an 8,145 SF, 4-story building including 46 hotel rooms, a commercial unit, and a spa/gym. It is anticipated that a new 6" fire protection water service and a new 2" domestic water service will be installed to serve the proposed residential building.

Portland Water District calculation sheets for peak flow based on fixture count are included for the proposed project.

Attached is the Longfellow Hotel civil plan set including a survey prepared by Owen Haskell, Inc. and a Utility Plan showing the location of proposed water services.

Please provide our office with confirmation that the Portland Water District has the ability to serve the proposed development.

If you have any questions or need more information to make your determination on ability to serve, please contact me at (207) 322-1223 or adrienne@terradynconsultants.com.

Sincerely,

TERRADYN CONSULTANTS LLC



Adrienne Fine, P.E.
Project Engineer

Enc. Project Plan Set
Fixture Count Spreadsheet

ATTACHMENT 11-B

City of Portland Wastewater Capacity Application

TERRADYN
CONSULTANTS, LLC
Civil Engineering - Land Planning - Stormwater Design - Environmental Permitting

1923

September 17, 2019

Bradley Roland, P.E.
Wastewater Resources Division
Department of Public Services
55 Portland Street
Portland, ME 04101

754 Congress Street, Portland
Wastewater Capacity Application

Dear Brad:

Terradyn Consultants LLC has been retained by CenterWest, LLC to assist with site design and permitting for a hotel project located at 754 Congress Street in Portland, Maine. The project includes the construction of a 4-story hotel, known as Longfellow Hotel, resulting in 46 hotel rooms, a commercial space, and a spa. The proposed project intends to use a new sanitary service connecting to the City's infrastructure in Congress Street. We are writing to request confirmation that the City of Portland has the ability to provide sanitary sewer service for the proposed development.

The 10,692 square foot parcel is identified as Block G, Lots 1, 2 and 3 on the City of Portland Tax Map 54. The site is at the corner of Congress and Neal Streets. One existing convenience store building exists on site and will be removed as part of this project.

The proposed project includes the construction of an 8,145 SF, 4-story building including 46 hotel rooms, a commercial unit, and a spa/gym. The proposed project is expected to generate approximately 5,260 gallons of wastewater per day based on the Maine Subsurface Wastewater Disposal Rules:

46	x Hotel Room with private bath at 100 gpd/unit	= 4,600 gpd
5	x Hotel Employee at 12 gpd/employee	= 60 gpd
20	x Eating Place, 3 meals/day at 30 gpd/seat	= 600 gpd
	Total	= 5,260 gpd

Attached is the Longfellow Hotel civil plan set including a survey prepared by Owen Haskell, Inc. and a Utility Plan showing how the site may be served by utilities. Also attached is a City of Portland Wastewater Capacity Application form.

Please provide our office with confirmation that the City of Portland has the ability to provide sanitary sewer service to the proposed development and any comments you may have on the attached drawing.

Please contact me at (207) 322-1223 or adrienne@terradynconsultants.com if you have any questions or require additional information.

Sincerely,

TERRADYN CONSULTANTS LLC



Adrienne Fine, P.E.
Design Engineer

Enc. Wastewater Capacity Application Form
Project Plan Set

CITY OF PORTLAND WASTEWATER CAPACITY APPLICATION

Department of Public Services,
55 Portland Street,
Portland, Maine 04101-2991

Bradley Roland, P.E.
Water Resources Division

Date: 9/17/2019

1. Please, Submit Utility, Site, and Locus Plans.

Site Address: 754 Congress Street, Portland

Chart Block Lot Number: 54/G/1, 2 & 3

Proposed Use: 46-room hotel & 1st floor commercial
Previous Use: gas station with convenience store
Existing Sanitary Flows: unknown GPD
Existing Process Flows: N/A GPD
Description and location of City sewer that is to receive the proposed building sewer lateral.
Existing 24" sewer in Congress Street

Site Category:

Commercial *(see part 4 below)*	☑
Industrial *(complete part 5 below)*	☐
Governmental	☐
Residential	☐
Other *(specify)*	☐

Clearly, indicate the proposed connections, on the submitted plans.

2. Please, Submit Contact Information.

City Planner's Name: _____ Phone: _____
Owner/Developer Name: CenterWest, LLC
Owner/Developer Address: 795 Congress Street, Portland, ME 04102
Phone: _____ Fax: _____ E-mail: _____
Engineering Consultant Name: Terradyn Consultants, LLC, Adrienne Fine, P.E.
Engineering Consultant Address: 565 Congress Street, Suite 201, Portland, ME 04101
Phone: 207-322-1223 Fax: _____ E-mail: adrienne@terradynconsultants.com

Note: Consultants and Developers should allow +/- 15 days, for capacity status, prior to Planning Board Review.

3. Please, Submit Domestic Wastewater Design Flow Calculations.

Estimated Domestic Wastewater Flow Generated: 5,260 GPD
Peaking Factor/ Peak Times: x6
Specify the source of design guidelines: *(i.e. "Handbook of Subsurface Wastewater Disposal in Maine," "Plumbers and Pipe Fitters Calculation Manual," Portland Water District Records, Other (specify)* State of Maine Subsurface Wastewater Disposal Rules

Note: Please submit calculations showing the derivation of your design flows, either on the following page, in the space provided, or attached, as a separate sheet.

46 x Hotel Room with private bath at 100 gpd/unit	=	4,600 gpd
5 x Hotel Employee at 12 gpd/employee	=	60 gpd
20 x Eating Place, 3 meals/day at 30 gpd/seat	=	600 gpd
	Total =	5,260 gpd

4. Please, Submit External Grease Interceptor Calculations.

Total Drainage Fixture Unit (DFU) Values: N/A

Size of External Grease Interceptor: _____

Retention Time: _____

Peaking Factor/ Peak Times: _____

Note: In determining your restaurant process water flows, and the size of your external grease interceptor, please use The Uniform Plumbing Code. Note: In determining the retention time, sixty (60) minutes is the minimum retention time. Note: Please submit detailed calculations showing the derivation of your restaurant process water design flows, and please submit detailed calculations showing the derivation of the size of your external grease interceptor, either in the space provided below, or attached, as a separate sheet.

5. Please, Submit Industrial Process Wastewater Flow Calculations

Estimated Industrial Process Wastewater Flows Generated: N/A GPD

Do you currently hold Federal or State discharge permits? Yes_____ No _____

Is the process wastewater termed categorical under CFR 40? Yes_____ No _____

OSHA Standard Industrial Code (SIC): *(http://www.osha.gov/oshstats/sicser.html)*

Peaking Factor/Peak Process Times: _____

Note: On the submitted plans, please show where the building's domestic sanitary sewer laterals, as well as the building's industrial-commercial process wastewater sewer laterals exits the facility. Also, show where these building sewer laterals enter the city's sewer. Finally, show the location of the wet wells, control manholes, or other access points; and, the locations of filters, strainers, or grease traps.

Note: Please submit detailed calculations showing the derivation of your design flows, either in the space provided, or attached, as a separate sheet.

12 SOLID WASTE

12.1 OVERVIEW

The project will generate solid waste both during construction and on an on-going basis after construction is complete. Estimates of solid waste generation, recycling rates, and procedures for the transport and disposal of solid waste that will be generated by the operation of the proposed development are provided below.

The following amount of solid waste associated with the construction and operation of the development have been estimated:

- 242 cubic yards of construction debris related to the new building construction activities (excluding volume of recycled materials).

- 375 pounds per week of solid waste will be generated by the operation of the development. Assuming that 50% of the waste is recycled, it is estimated that the project will generate 4.9 tons of recyclable waste and 4.9 tons of non-recyclable waste per year.

12.2 SOLID WASTE GENERATED DURING THE BUILDING CONSTRUCTION

Approximately 242 cubic yards of construction debris is expected to be generated during construction. Assuming that 80% of construction debris is recycled, construction of the project will generate approximately 48.4 c.y. of non-recyclable waste.

The waste stream will be transported and disposed of at the following locations:

Hazardous Materials:	WMI Crossroads Facility in Norridgewock, Maine
Mixed Construction Material:	Riverside Recycling Facility in Portland, Maine; WMI Crossroads Facility in Norridgewock, Maine or Juniper Ridge in Old Town, Maine (Contractor option)
Separated Wood Construction Debris:	KTI Biofuels in Lewiston, Maine
Separated Metal/Ferrous Material:	One Steel Recycling Inc. in Arundel or Oakland, Maine

The collection, transfer, disposal, and payment of all fees for solid wastes shall be the responsibility of the Contractor, with all waste transferred by a licensed non-hazardous waste transporter.

12.3 SOLID WASTE GENERATED FROM THE OPERATION OF THE DEVELOPMENT

Approximately 375 pounds of solid waste and recyclable material is expected to be generated every week by the residents of the project. The operational solid waste and recyclable material will be collected by a private waste hauler to be contracted by the developer.

12.4 ATTACHMENTS

Attachment 12-A – Computations of Types and Volumes of Solid Wastes for Construction Project

ATTACHMENT 12-A

Computations of Types of Volumes of Solid Wastes

ATTACHMENT 12-A

SOLID WASTES COMPUTATIONS AND DISPOSAL

A. NEW BUILDING CONSTRUCTION:

Basis of Estimate: 10 c.y./1,500 s.f. of finished space

Area: Approximately 36,300 square feet of finished space (includes proposed building and parking garage)

Solid Waste: Approximately 242 c.y.

Other Wastes Associated with Other Site Construction: Cardboard from packaging etc.: Limited Quantity

Total: 242 c.y. before recycling

Net: 48.4 c.y. if 80% of the material is recycled

Disposition:
Assume 10 percent is concrete which can be sent to the approved aggregate recycling facilities operated by Shaw Bros. or R.J. Grondin and Sons for processing into recycled aggregate.

Assume 70 percent is wood or metal which can be transported to KTI Biofuels in Lewiston (for wood) or One Steel Recycling in Oakland, Maine for metals.

Approximately 48 cubic yards of mixed construction debris that will be hauled to the Riverside Recycling Facility in Portland, WMI Crossroads facility in Norridgewock, Maine or the Juniper Ridge Facility in Old Town, Maine.

The contractor should provide dumpsters designated by material type and identify recycling methods and disposal sites prior to construction. All haulers must have a current non-hazardous waste haul license.

B. OPERATIONAL SOLID WASTE:

RESIDENTIAL USE:
Basis of Estimate: 75 pounds/wk per employee. Estimate of 5 employees. From Table 14-1 of the CEQR Technical Manual from January 2014 Edition; Source: New York City Department of Sanitation.

Solid Waste = 75 pounds/employee * 5 employees = Approximately 375 pounds/week

13 FIRE SAFETY

13.1 OVERVIEW

The applicant and project team will provide the Portland Fire Department with the information required in the PFD Site Review Checklist, as well as a basic review of NFPA 1 and City of Portland Technical Standards related to public safety.

The project site will be accessed from Congress and Neal Streets, which both are improved with paved surfaces, 43’ and 21’ respectively. An 20” water line owned by the Portland Water District currently exists in Congress Street and a 12” water line owned by the Portland Water District currently exists in Neal Street. There are two nearby fire hydrants; one is located across Congress Street near the intersection of Congress and Neal Streets, and the other is on Carleton Street near the intersection with Congress Street.

Three sides of the proposed building will be fully accessible from Congress Street, Neal Street, and a parking lot south of the site on Neal Street. The proposed building will be fully sprinkled in compliance with all applicable codes.

14 CONFORMITY WITH APPLICABLE DESIGN STANDARDS

14.1 OVERVIEW

This project conforms to all applicable Site Plan Standards of Section 14-526 of the city's Land Use Ordinance as described in the following narrative.

(a) Transportation Standards

1. Impact on Surrounding Street Systems:

   The project will not have a significant impact on the surrounding street system. Vehicles will access the site and parking areas from existing access points and the estimated number of new vehicle trips generated by the project is insignificant compared to existing trips on surrounding streets.

2. Access and Circulation:

   a. Site Access and Circulation

      (i) Vehicular access and circulation will be an improvement upon existing conditions. The two curb cuts on Congress Street will be closed and one of the curb cuts on Neal Street will be closed. Vehicle access will be via a new driveway off Neal Street. Pedestrian access to the proposed building will be provided via the re-constructed existing sidewalks along Congress and Neal Streets. The building doors enter into public spaces (commercial space and hotel lobby).

      (ii) The project will use existing improved points of vehicular access.

      (iii) Drive up features are not proposed

   b. Loading and Servicing

      (i) Delivery or service vehicles are expected to be infrequent and may temporarily use on-street parking on Congress or Neal Streets or may also park in on-site surface parking areas.

   c. Sidewalks.

      (i) The existing sidewalk along the Congress Street frontage will be reconstructed in the vicinity of the proposed building to remove two large existing curb cuts and provide a continuous brick sidewalk in front of the proposed building. The existing sidewalk along the Neal Street frontage will be reconstructed in the vicinity of the proposed building to remove two large existing curb cuts and create a new vehicle access driveway. All

sidewalk improvements shall conform to the City of Portland Technical Manual as shown on the project drawings.

(ii) The Neal Street sidewalk and driveway apron will be constructed in accordance with City of Portland Technical Design Standards.

(iii) Proposed on-site walkways are for emergency egress or access to utility rooms. The primary building entrances are on the Congress Street sidewalk. An additional building entrance exists in the covered surface parking area. The spa space will also have an exterior door leading to a private patio space for the spa use. The commercial space will also have an exterior door leading to a patio near the corner of Neal and Congress Streets to be used for sidewalk seating for the commercial/café use.

3. Public Transit Access:

Metro Bus Route 8 runs west on Congress Street in the vicinity of the project site. The nearest bus stop to the project is at the intersection of Mellen and Congress Streets, approximately 300' east of the site. The project does not meet the minimum threshold to require a new transit facility.

4. Parking:

a. Location and Required Number of Vehicle Parking Spaces:

(i) The project requires a total of 12 parking spaces calculated below:
Hotel = 1 space/4 rooms * 46-rooms = 11.5 spaces

The proposed project includes 17 parking spaces. These parking spaces will all be valet. One of the parking spaces is an ADA van-accessible space for loading. Additionally, there will be four parking spaces striped along the site's Congress Street frontage. The applicant proposes that two of these spaces be designated for hotel drop off with a 5-minute limit, and the other two be public parking with a 15-minute limit.

(ii) A parking study is not required for this project.

(iii) Not Applicable.

(iv) The proposed parking spaces are smaller than required per the dimensional standards. These parking spaces are valet so the smaller sizes will work. The applicant requests a waiver to allow the parking dimensions as shown on the site plan. The drive aisles will meet required dimensional standards.

(v) The proposed on-site parking lot will be constructed of bituminous pavement.

b. Location and Required Number of Bicycle Parking Spaces:

(i) The project requires 2 bicycle parking spaces for every 10 vehicle parking spaces, or 4 spaces. Bicycle parking spaces will be provided at 2 bike hitches (2 spaces each) located in the Congress Street sidewalk.

c. Motorcycles and Scooter Parking:

(i) Dedicated motorcycle/scooter parking is not provided.

d. Snow Storage:

(i) Snow storage will be provided on the proposed landscaped areas adjacent to the uncovered portion of the parking lot. The majority of the parking lot is covered.

(ii) Snow will not be stored in parking areas, and no bio-retention is proposed.

5. Transportation Demand Management (TDM):

a. A TDM plan is not required for this project.

(b) Environmental Quality Standards

1. Preservation of Significant Natural Features:

a. The development site has been entirely developed and does not contain any significant natural features including wetlands, vernal pools or other protected resources or wildlife habitats.

b. Not applicable

c. Not applicable

2. Landscaping and Landscaping Preservation:

a. Landscape Preservation.

(i) One street tree in poor condition is located along the site's Congress Street frontage and will be removed during building and utility construction. One tree is located on-site adjacent to an abutting building and the guardrail. This tree is located too close to buildings and in poor condition and will also be removed. Vegetative plantings of an appropriate size will replace the trees as shown on the Landscape Plan.

(ii) There is only one tree within the setbacks and it is proposed to be removed due to its location between the abutting building and guardrail.

(iii) Besides the one tree, there is no vegetation on site to protect during construction.

(iv) Waiver: The existing tree on site will be impacted by building and site construction and preservation would compromise the development of the site. The tree will be replaced with appropriate plantings at a scale that is appropriate to the site, as specified by the landscape architect.

(v) The project is not in the Shoreland Zone

b. Site Landscaping.

(i) Landscaped Buffers:

(a) Landscape improvements surrounding the building are proposed as part of this project.

(b) Plantings are proposed in the side and rear zoning setback areas, as specified on the Landscape Plan.

(c) Not applicable.

(d) Vegetated buffers between the proposed building and surrounding residential development is specified on the Landscape Plan.

(ii) Parking Lot Landscaping:

(a) Not applicable. The parking lot is in a covered garage.

(b) Not applicable.

(c) Not applicable.

(d) Not applicable.

(e) Not applicable.

(iii) Street Trees

(a) The existing street tree along the Congress Street frontage is in poor condition and will be removed during building construction. Three new street trees along the Congress Street frontage are proposed spaced approximately 30 ft and 50 ft apart. No street trees are proposed along

the Neal Street frontage due to the overhead power lines, width of the sidewalk, and abundance of underground utilities.

(b) Not applicable.

3. Water Quality, Stormwater Management and Erosion Control:

a. Stormwater:

The existing project site contains approximately 10,692 square feet of impervious surface. Redevelopment of the project site will result in a decrease of approximately 1,101 square feet of impervious area to a total impervious surface of 9,591 square feet. Therefore, the project is not required to meet the General or Flooding Standards. The proposed building will be located where paved parking exists today, therefore the project will result in a decrease of non-roof impervious area, so the project does not meet the threshold for redevelopment standards.

Post development stormwater runoff will generally follow existing patterns. Stormwater runoff from the proposed building and parking area will be collected in a proposed on-site drainage system and conveyed to a new drain manhole in Neal Street that will connect to the existing City storm drain system in Neal and Congress Streets. Stormwater runoff from the patio and vegetated areas southeast of the building outside the spa area will be captured in a new catch basin and conveyed to the City storm drain system in Congress Street. Stormwater runoff from the sidewalk areas will continue to flow overland into the existing City storm drain system in Congress and Neal Streets as it does today. Runoff from the proposed building roof will be collected in a roof drain and discharged to the proposed on-site stormdrain network.

(i) The project will not result in flooding of adjacent lots.

(ii) Runoff volumes and rates will not increase onto adjacent lots.

(iii) Volumes and rates of stormwater runoff into the Congress and Neal Street right of ways are expected to decrease. The project will not create ponding, flooding, or other drainage problems within Congress or Neal Streets.

(iv) Volumes and rates of stormwater runoff into the city's storm drain network are expected to be similar to existing volumes and rates. The project will not create problems downstream or exceed the capacity of the system.

b. The project will result in a decrease in impervious surface and is not required to meet the General or Flooding Standards.

c. Not Applicable. The project is not located in a watershed of an urban impaired stream.

d. Not applicable.

e. The project will be served by both a public wastewater system and public drainage system. The project will not pose a risk of groundwater contamination.

f. Wastewater will flow to the public sewer system, which is adequately sized for the project flows.

(c) Public Infrastructure and Community Safety Standards.

1. Consistency with City Master Plans:

a. The project has been designed to be consistent with the City of Portland Land Use Ordinance and off-premises infrastructure.

b. Not applicable.

2. Public Safety and Fire Prevention:

a. The site has been designed to promote safety and security for residents and their guests. Access to the building will be through the hotel lobby or commercial space. Site lighting will provide added security.

b. Emergency vehicle access will be via Congress and Neal Streets. The driveway entering the site from Neal street will be 20’ wide.

c. Two existing fire hydrants are located along Congress Street in the vicinity of the project. One hydrant is located across Congress Street near the intersection of Congress and Neal Streets and the other is located on Carleton Street near the intersection with Congress Street. The proposed building will also feature sprinklers for fire suppression.

3. Availability and Adequate Capacity of Public Utilities:

a. The project will be served by new water and sewer utilities. An ability to serve letter has been requested from the Portland Water District, and a Wastewater Capacity Application has been uploaded to eplan for review by Brad Roland at the City of Portland.

b. Overhead electrical and telecommunications utilities exist along Neal and Congress Streets. The proposed building will be served by underground utilities from Pole #J18 located west of the site on Neal Street.

c. All new utility infrastructure will meet the provisions of the Technical Manual.

d. The proposed building will be connected to the public sewer system within Congress Street.

e. The sanitary sewer and stormwater collection systems were designed to comply with City standards.

f. A solid waste storage area will be provided in the ground level of the building adjacent to the parking area.

(d) Site Design Standards

1. Massing, Ventilation and Wind Impact:

a. The bulk, location and height of the proposed building will not result in adverse impacts to abutting properties.

b. The bulk, location and height of the proposed building will not substantially reduce the value or utility of adjacent structures.

c. An ERV fan will be located on the roof.

2. Shadows:

a. The project is not expected to cause shadows on publically available open space, or have an adverse effect on vegetation as a result of shadows cast from the proposed building.

3. Snow and Ice Loading:

a. The proposed building will have a flat roof. Accumulated snow and ice will not fall onto adjacent properties or public ways.

4. View Corridors:

a. The project site is located outside of any protected view corridors.

5. Historic Resources:

a. The development is located within a designated historic district and review is under way with the City of Portland Historic Preservation.

b. The proposed building is designed to be generally compatible with the major character-defining elements of the historic district in the immediate vicinity of the proposed development.

c. There are no known archaeological resources on the site.

6. Exterior Lighting:

a. Site Lighting

(i) Exterior site lighting will be provided by building mounted lights along sidewalks and in parking areas. All fixtures will feature full cut-off optics to prevent unintended light pollution. Proposed lighting is shown on the Lighting Photometric Plan (Sheet P-1).

b. Architectural and Specialty Lighting:

(i) No architectural or specialty lighting is proposed.

(ii) No up-lighting is proposed.

c. Street Lighting

(i) No street lighting is proposed. An existing overhead cobra style street light exists on a pole at the intersection of Congress and Neal Streets.

7. Noise and Vibration:

Noise levels are expected to meet the permitted levels for the R6 Zone.

a. HVAC and Mechanical Equipment

(i) The proposed building will have ERV fans located on the roof that will not be visible from Congress or Neal Streets, or adjacent sites.

(ii) No emergency generator is proposed for this project.

8. Signage and Wayfinding:

a. All signage shall meet the requirements of the Manual on Uniform Traffic Devices (MUTCD) and Division 22 of the City Code.

(i) The proposed hotel signage can be seen on the architectural renderings.

(ii) The proposed commercial signage can be seen on the architectural renderings.

(iii) Directional signage will be building mounted at the garage.

(iv) Not applicable. No waiver is required.

9. Zoning Related Design Standards:

a. The project is located within a historic zone and review is under way with the City of Portland Historic Preservation.

(i) The project is designed to support the development of dense, mixed-use neighborhoods with attractive, safe and convenient street level pedestrian environments.

(ii) Not applicable.

(iii) Not applicable.

(iv) Not applicable.

(v) The residential development shall integrate with and respect the character of surrounding residential development in terms of architectural form, landscaping and open space, façade materials, roof pitch, massing and height.

b. Not Applicable.

754 Congress Street Proposed Development
CenterWest LLC

A Neighborhood Meeting was held on the evening of Monday, October 21st, from 6:30 PM until approximately 8 PM, at the location of Tandem Café and Bakery, 742 Congress Street, immediately next door to the proposed development site.

Approximately 20 to 24 members of the public attended, with 19 signing the provided sign-in sheet. (See copy attached)

Attending on behalf of the Development Team were David Lloyd and Sam Berry from Archetype Architects, and CenterWest, LLC principals, Nate DeLois, Anthony DeLois and David Swardlick.

An overview of the project was presented by Nate DeLois and David Lloyd, along with blown-up visuals of the site plan and building renderings. Following the presentation, questions and open discussion took place.

The following questions were asked and discussed:

"What about the one-way traffic on Neal Street? Won't that create challenges." (Development Team shared the proposed approach to changing the short section of Neal Street closest to Congress Street to two-way traffic to alleviate the issue.)

A Mellen Street neighbor raised the issue that, unlike surrounding areas, there is no 2-Hour restriction on Mellen Street. He worried that hotel guests would forego the available paid parking at the hotel and seek parking on Mellen Street.

He asked why Mellen Street couldn't be changed to 2-Hour parking.

A Neal Street neighbor stated, "Cars park on Neal Street for days in the same spot with no consequences…"

A Congress Street neighbor asked why the project couldn't include below-ground parking. David Lloyd explained that the site was very small for ramped parking and that the construction would not be feasible.

A Deering Street neighbor stated that parking challenges in the area are being exacerbated by construction on Deering Street and Cumberland Avenue. He raised the concern that hotel guests would not want to pay for parking. (Anthony DeLois shared the experience at The Francis, across the street, where nearly all the guests that travel by car choose to pay for parking.)

The Mellen Street neighbor added: "I wouldn't be so concerned about parking if Mellen Street were turned into 2-Hour parking."

A person who works in the neighborhood raised concerns about the low-income residents of Portland and the issue of development that caters to "upper-middle-class and wealthy people." Their comments continued about whether the development would lead to a displacement of affordable housing. Nate DeLois discussed the development's required contribution to the Workforce Housing Fund, which will be in the amount of over $175,000. The neighbor followed up with a comment about appreciation for the fact that such a contribution would be made.

There was some discussion about safety in the immediate neighborhood, both before and after The Francis and Bramhall Row have been developed, along with other changes, and that there seems to be improvements in the feelings of safety, or more positive activity in the past couple of years.

A Neal Street neighbor noted that she has had to call the police in the past 4 or 5 months because of her observation of use of drugs, drunkenness and other behaviors.

A previous speaker who works in the neighborhood expressed the hope that business operators "interact with the addicts and poor people without having to call the police…" She continued that there are non-emergency police lines to call with people trained to deal with issues. Tony DeLois explained that the staff of The Francis, including himself, have had no issues that escalated to a police call resulting from interactions with community members. Many people do come into the public spaces at the hotel, which people are welcome to do, he said, and the staff has always been worked effectively the public, whether registered guests or people who "simply come in looking for a bathroom…."

A question was asked about the brick building immediately behind (to the southeast of) the proposed development. David Lloyd noted that it appeared to be used as a workshop. The person inquiring about that building asked if that property could be developed in the future.

A Mellen Street neighbor ask about how many employees there would be working at the hotel and another neighbor asked about employee parking. It was noted by the Developers that very few of the employees at The Francis bring cars.

There was a question about how the architects "modeled" the location and visibility of the heating or mechanical units on the roof of the proposed building.

Questions were asked about the spaces on the first floor of the building and where the Spa and Fitness facilities would be. It was asked if the gym would be open to the public, and another neighbor asked if one could pay a monthly fee for use of the Spa.

A neighbor asked how long the construction period would be. The Developers responded that the all of the construction management firms interview planned on an approximately 12-month period of construction.

A neighboring business owner asked what the proposed development was doing about “green” features or characteristics. The architect and developers reviewed the energy-efficiency characteristics of the design, the effort to use green or sustainably produced materials and also, the efforts underway to explore the FitWel certification, which is a comprehensive evaluation of environmental sustainability and a broad range of health and wellness considerations.

The owner of an abutting property inquired about what measures would be taken to avoid negative impacts of digging or “pounding.”

Another owner of nearby business asked about the footings that would be constructed.

A neighboring resident said, “I think the proposal is a huge upgrade from the existing convenience store.”

Other very positive comments were made. From a neighboring business owner: “It looks like a very nice project.”

From the person who works in the neighborhood and had expressed concerns about low-income residents and also police issues: “You seem like reasonable business people so we appreciate that.”

A neighbor brought up the issue of potentially looking down on the roof of the proposed building from any buildings that are higher. He encouraged the Development Team to address that.

There was another question about what type of HVAC systems would be used.

Questions were asked about the building materials, and architectural details of the exterior of the building. Including what color would the clapboards be on the south side and southeast corner of the building.

The owner of a nearby Congress Street business who had inquired about green characteristics said, “I really support the project, I would just like to urge you to ‘aim high’ and exceed building code requirements about energy efficiency (and characteristics like air-exchange spec’s).”

A final question was asked about the expected clientele for the hotel…would it be similar to the clientele of The Francis.

The Development Team concluded by thanking all those who had come out to join in the discussion and urged everyone to stay involved, follow the announcements about meetings on the City’s website, and come to the project meetings at City Hall.

SIGN UP SHEET

754 Congress Street

21-Oct-19

	Name	Address
1	ERIC OBERY	142 NEAL ST.
2	BJ VANDAMME	168 NEAL ST. #5
3	Jason Kaplan	49 Ocean Ave 207 774 9449
4	MARIE MATSON	749 Congress #4
5	Pam Stagg	749 congress #7
6	Tony Zeli	795 Congress St
7	Michael Patterson	66 DEERING ST
8	H. Todd Lackey	66 Deering St
9	Ellia Manners	174 Neal St., Apt. #1
10	George BRADT	174 Neal St Apt #1
11	Margaret Cumbie	14 mellen Street APT 2R
12	Ted Hummel	14 mellen Street APT 2R
13	MK + Peter Muncie	749 Congress #1 04102
14	Gabe Kelley	29 Emerson St #1 04101
15	Madison Trent	553 Cumberland ave. B4 04101
16	Jaques SANTUCCI	770 Congress st
17	RAY STAGG	749 Congress #7
18	LIZ TRICE	297 Brackett St
19	C. Waite	749 Congress St #2
20		
21		
22		
23		
24		
25		
26		

TERRADYN CONSULTANTS, LLC

Pineland
Cumberland Hall
41 Campus Drive, Suite 101
New Gloucester, ME 04260

Portland
565 Congress Street, Suite 310
Portland, ME 04101

October 29, 2019

Andrew Tufts
City of Portland
389 Congress Street
Portland, ME 04101

Subject: Longfellow Hotel
754 Congress Street
Response to Staff Review Comments

Dear Andrew Tufts:

Our office has received the staff review comments for the above referenced project, dated October 10, 2019. We have reviewed the comments and have prepared the responses presented below. For clarity, each comment is repeated in italics, followed by our response.

Comments from Mike Tremblay, DPW P.E. Senior Engineer

Comment 1: *The sidewalk along Congress Street appears to narrow to accommodate a ramp for loading/unloading. This ramp pinches the sidewalk down to 6.6 feet. While this is technically sufficient, narrowing the pedestrian path is not desirable along Congress Street, where there is substantial pedestrian activity. There must be at least 5 feet of accessible sidewalk within the City ROW; this may or may not be provided. The Applicant should verify.*

Response: Several small changes were made to the proposed curb alignment and curb ramp at the hotel entrance. The changes result in an increase of the width of the accessible sidewalk within the right of way to 6.9 feet.

Comment 2: *The sidewalk cutout serving the hotel lobby should be designed with radial curbs to assist with plowing. The Applicant should note that this cutout area may be difficult to plow and clear of leaves/debris, so the operators of the hotel may need to clear this area to achieve the functionality that the Applicant is looking for.*

Response: Curb radii have been added to the sidewalk cutout as requested. The change can be seen on Sheet C-3.0.

Comment 3: *The gutterline along Congress Street should be maintained through the cutout to prevent ponding in this sidewalk cutout. This will reduce the curb reveal slightly, and provide the ability to make the curb ramp somewhat shorter and somewhat alleviate the pinch point discussed above.*

Response: The proposed grading has been revised in order to maintain the gutterline along Congress Street. The changes are shown on Sheet C-4.0.

Comment 4: *The ramp serving the loading area likely can be narrowed. A 10-foot ramp extends the length of the sidewalk that is narrower than optimal, and it is not clear why this width is necessary. Narrowing this ramp to 5 feet is requested.*

Response: The ramp has been narrowed to 5 feet as requested.

Comment 5: *The material of the sidewalk appears to change to an alternate material (pavers or similar) in the vicinity of the building entrance. This is not acceptable within the City ROW. The sidewalk shall only consist of brick within the ROW.*

Response: The applicant is proposing an area of granite pavers, approximately 6'x10', directly in front of the hotel entrance as an important design element. The pavers will encroach into the city right of way by approximately 3'. The applicant would like to work with the city to allow the pavers through a license agreement or other legal framework.

Comment 6: *Tipdowns should be 7 feet long or longer. The curb reveal should be designed to 7 inches.*

Response: The reveal of the proposed curb has been revised to 7 inches, and tipdowns have been revised to 7 feet in length.

Comment 7: *Sidewalks should be designed to a 1.5% cross-slope to provide some construction tolerance. No cross-slopes over 2.0% will be acceptable.*

Response: Grading has been slightly revised to specify a 1.5% cross slope on proposed sidewalks in most locations. No cross slopes over 2% are proposed.

Comment 8: *Brick sidewalk orientation shall run across the width of the sidewalk, as shown in the attached detail, including through driveway aprons.*

Response: The proposed brick hatch on the drawings has been revised to better reflect the proposed orientation of the bricks.

Comment 9: *There is a (fire?) cabinet at the corner of Congress/Neal that may need to be retained.*

Response: We request more information on the exiting cabinet. The drawings have been revised to allow for the cabinet to remain in place if necessary.

Comment 10: *The curb ramp at the eastern corner of Congress/Neal is not acceptable. A 5-foot accessible (2% max cross slope) pedestrian path must be maintained around the corner. The flare on the Neal Street side of the ramp interrupts the accessible pedestrian path.*

Response: The curb ramp at the eastern corner of Congress and Neal Streets has been revised to maintain a 5’ accessible path around the corner.

Comment 11: *The curb ramp at the western corner of Congress/Neal is not acceptable. Flares are shown crossing the pedestrian path on Neal Street, which indicates a grade break that will introduce unacceptable cross-slopes. Additionally, the City prefers separated curb ramps serving different crosswalks. The 12-foot radius at this corner may be able to be reduced, which would make providing separated ramps easier.*

Response: The proposed curb ramp at the western corner of Congress and Neal Streets has been revised. The corner radius was reduced to 8 feet, and separate ramps for each crossing have been designed.

Comment 12: *One Way and No Right Turn signs, and/or other indications, may be needed for adjacent southerly driveway(s) indicating that the street continues to be one-way southbound south of the project site.*

Response: A One-Way sign has been added to the Site Plan, to be located on the east side of Neal Street, across from the adjacent curb cut to the south.

Comment 13: Parking space dimensions should not include the width of any columns.

Response: Additional dimensions between proposed columns have been added to the Site Plan (Sheet C-3.0).

Comment 14: Waivers will be required for parking drive aisle width (22' proposed, 24' required) and compact space makeup (94% proposed, 20% maximum allowed). These waivers will be supported by DPW with the condition that all parking is valet or otherwise managed (i.e. that cars are parked by Hotel staff or a parking management company and not guests).

Response: The applicant requests the referenced waivers and confirms that all vehicles will be parked by hotel staff.

Comment 15: While traffic impacts are not high enough to warrant a TMP, it should be noted that valet parking creates additional vehicle maneuvers. While the 2-way conversion of a portion of Neal Street is supported, it is not clear how vehicles will access the parking lot without going through the neighborhood or making a U-turn on Congress Street. The proposed circulation of entering vehicles is requested.

Response: It is expected that guests arriving at the hotel in their own vehicle will proceed directly to the parking garage on Neal Street. The valet will be located at the entrance to the garage and will park the vehicle. Guests can enter the hotel lobby directly from the garage.

The short term drop-off/pick up spaces on Congress Street are intended to serve guests that are dropped off or picked up by taxi, uber, or other ride service. It is not anticipated that vehicles will regularly travel from the drop-off/pick up spaces on Congress Street to the parking garage on Neal Street. In the rare occasion that this happens, drivers will circle around through the neighborhood to access Neal Street.

Comment 16: The proposed DMH 1 on Neal Street appears to overlap with the curb line and existing telecommunications line.

Response: DMH 1 will feature an eccentric cone as a top section in order to avoid conflicting with the proposed curb. The exact location of the telecommunications line is unknown. The contractor will perform a test pit to locate the line prior to installation of DMH 1. Adjustments to the location of DMH 1 will be made as necessary.

Comments from Robert Thompson – Fire

Comment 17: The Fire Department approves C-3.0 SITE PLAN.pdf

Response: No Response Necessary

We trust that the above responses and attached materials address the comments. Please contact me directly with additional questions or concerns.

Sincerely,
TERRADYN CONSULTANTS LLC

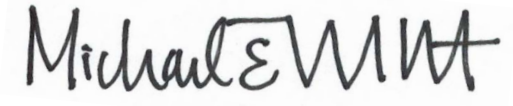

Michael E. Tadema-Wielandt, P.E.
Vice President

Attachments:
C-2.0 Site Plan
C-4.0 Grading, Drainage & Erosion Control Plan

cc. Nate DeLois
David Swardlick
Anthony DeLois
David Lloyd, Archetype Architects

TERRADYN CONSULTANTS, LLC

Pineland
Cumberland Hall
41 Campus Drive, Suite 101
New Gloucester, ME 04260

Portland
565 Congress Street, Suite 310
Portland, ME 04101

November 15, 2019

Andrew Tufts
City of Portland
389 Congress Street
Portland, ME 04101

Subject: Longfellow Hotel
754 Congress Street
Response to Staff Review Comments

Dear Andrew:

Our office has received the staff review comments for the above referenced project, dated October 29, 2019. We have reviewed the comments and have prepared the responses presented below. For clarity, each comment is repeated in italics, followed by our response.

Comments from Bruce Hyman, Transportation

Site Plan

Comment 1: *The applicant shall provide street lighting on Congress Street as prescribed in the Technical Manual, Chapter 10*

Response: Two street lights have been added to the proposed plan along the site frontage, spaced at approximately 100'. The lights are to be the "Downtown Street / Pedestrian Combo", in accordance with the Technical Manual Section 10. A detail for the light is shown on Sheet C-6.3

Comment 2: *The note for "4" wide parking striping" along Congress Street is to be removed- the city does not stripe individual parallel parking spaces.*

Response: Parking striping has been removed from the plan.

Comment 3: *Comments from Mike Tremblay have covered the need to revise the curb ramp designs at Neal Street.*

Response: No response necessary.

Comment 4: *It may be desirable to move the bike rack closest to Neal Street approx. 2' farther away from the Parking sign close-by for additional clearance/maneuverability while parking and locking bike.*

Response: The bike rack has been moved as suggested.

Driveway on Neal Street

Comment 5: *The Site Details, Site Plan and Grading Plan related to the driveway do not appear to be consistent in how they represent the driveway would actually be constructed and are to be revised, as needed.*

Response: The brick driveway apron detail on Sheet C-6.0 has been revised to reflect the proposed condition. The apron will feature a constant cross slope of less than 2% in accordance with ADA accessibility requirements.

Construction Management Plan:

Comment 6: *The curb-to-curb Congress Street road width of 43' as shown on the plan will provide adequate width to provide a minimum clear width of 5' pedestrian detour walkway along Congress Street between the curb and jersey barrier (with 4' of walkway, the width is shown at 36') – additional width to a 5' minimum is to be provided.*

Response: The Construction Management Plan (Sheet C-2.1) has been revised to specify a minimum 5' wide temporary walkway.

Comments from Caitlin Cameron – Urban Design

Comment 7: *This project is in the Congress Street Special Lighting area and will need to install the decorative lights on Congress Street. The appropriate fixtures is the "Downtown: Street/Ped Combo" at the spacing described in the Technical Manual*

Response: Two street lights have been added to the proposed plan along the site frontage, spaced at approximately 100'. The lights are to be the "Downtown Street / Pedestrian Combo", in accordance with the Technical Manual Section 10. A detail for the light is shown on Sheet C-6.3

Comment 8: *I don't see any issues with the lighting plan although with the street lights added on Congress Street, the building lighting might be overlit – the frequency seems high especially near residential uses. They must fall within lighting levels prescribed in the Technical Manual Section 12.*

Response: The lighting design has been modified on the north side of the building, along Congress Street. The two streetlights referenced above were added, and several building mounted lights were removed along with the bollard lights. A revised Photometric Lighting Plan (Sheet P-1.0) has been prepared and submitted.

Comment 9: In regard to the lit bollards within the public right-of-way (which should also have been included in the lighting plan). It is my finding that these are not appropriate - the proposed lit bollards are not found in the Technical Manual, these would be redundant to the required decorative street light fixtures, not to mention the plowing obstacle they create. I would reject these and request they show the decorative street lights.

Response: The previously proposed bollards with lights have been removed from the plan, as requested. Decorative street lights have been added, as described above.

Comments from Lauren Swett - Civil

Comment 10: In accordance with the Maine DEP Chapter 500 Regulations and Section 5 of the City's Technical Manual, the Applicant is required to meet the Basic, General, and Flooding Standards for Stormwater Management. The project will reduce impervious surface on the site and will reduce the amount of non-roof redeveloped impervious surface. No treatment or storage is required to meet the General and Flooding Standards. Additional erosion & sedimentation control information should be provided on sheet C-4.0; there is minimal site area beyond the building footprint, but catch basin protection and construction entrance locations should be identified, as well as sediment barrier that may be necessary during part of construction.

Response: Sediment barriers, catch basin protection, and a construction entrance have been added to Sheet C-4.0. Details for these sedimentation control measures are shown on Sheet C-6.2.

Comment 11: All internal parking garage drainage from the proposed oil water separator must connect to the sanitary sewer, not to the stormdrain. This should be separated from roof drains that can connect to the stormdrain. If both roof and garage drainage connect to a combined sewer, the connections should be separate to facilitate future separation in the street.

Response: Drainage from the parking garage has been redesigned to connect to the combined sewer in Neal Street after flowing through an oil/water separator. The drainage pipe is 6” in diameter, and connects directly to the 18” combined sewer. The proposed roof drain has been separated from the parking garage drainage, and will also connect directly to the combined sewer.

Comment 12: Stormdain pipes from private development sites are not allowed to connect into catch basins in the street and should connect directly to the stormdrain main. Pipes 8” or larger must connect to an existing manhole or install a new manhole on the main.

Response: The storm drainage design has been revised to connect to the public system as required. All storm drains connecting to the combined sewer will be 6” diameter.

Comment 13: It appears that the Applicant is changing the curbline location, and as a result at least one of the catch basins at the corner will no longer be a curb inlet basin. Justification of this change, and grading information to confirm that drainage will function properly at this corner should be provided.

Response: An inlet stone associated with a catch basin at the corner of Neal and Congress Street is proposed to be removed. This is necessary to construct the curb ramps as requested by Public Works. The catch basin will be adjacent to a new curb tipdown. Detailed spot grades are provided on Sheet C-4.0 and specify how runoff will drain at this corner.

Comment 14: The stormdrain main is not shown on the plans. Two connections are proposed, but the main is not identified. Further confirmation of separate or combined systems in this area, and the location of the connections should be provided. Brad Roland may be able to provide additional information here.

Response: Additional information on the existing utilities was received from the city’s engineering department. The existing system includes combined sewer and storm drains in Neal and Congress Streets. This information has been added to the drawings.

We trust that the above responses and attached materials address the comments. Please contact me directly with additional questions or concerns.

Sincerely,
TERRADYN CONSULTANTS LLC

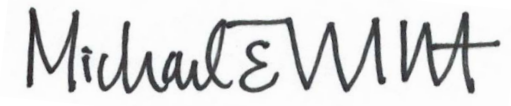

Michael E. Tadema-Wielandt, P.E.
Vice President

Attachments:
C-3.0 Site Plan
C-4.0 Grading, Drainage & Erosion Control Plan
C-6.0 Site Details
C-6.1 Utility & Drainage Details
C-6.3 Planting & Site Lighting Details
P-1.0 Photometric Lighting Plan

cc. Nate DeLois
David Swardlick
Anthony DeLois
David Lloyd, Archetype Architects

TERRADYN CONSULTANTS, LLC

Pineland
Cumberland Hall
41 Campus Drive, Suite 101
New Gloucester, ME 04260

Portland
565 Congress Street, Suite 201
Portland, ME 04101

September 25, 2019 1923

Ms. Victoria Volent
Housing Program Manager
Housing and Community Development Division
389 Congress Street, Room 312
Portland, ME 04101

Longfellow Hotel, 754 Congress Street, Portland
Conditional Use Application – Inclusionary Zoning

Dear Victoria:

On behalf of CenterWest, LLC, Terradyn Consultants is pleased to submit Conditional Use Inclusionary Zoning information for the proposed 46-room hotel located at 754 Congress Street in Portland. The proposed project includes the construction of a 4-story 46-room hotel with commercial space and parking on the ground floor.

A complete Level III Development Review application was submitted for the project on September 12, 2019. Because the project is a hotel and includes more than 10 guest rooms, a Conditional Use permit is also required, and the project must comply with the requirements of Section 14-487 of the city's Land Use Ordinance, which is intended to ensure an adequate supply of workforce housing. The applicant intends to pay the fee in lieu of providing workforce housing units.

We look forward to your review of this project and request to be placed on the next available Planning Board agenda to discuss the project with the Board. In the interim, if you have any questions or need additional information, please contact me at adrienne@terradynconsultants.com.

Sincerely,
TERRADYN CONSULTANTS, LLC

Adrienne Fine
Project Engineer

Portland, Maine Yes. Life's good here.

Planning & Urban Development Department

LEVEL II and LEVEL III APPLICATION SUBMISSION CHECKLIST

Submit each Tab as one PDF file and bookmark the items as noted below

Please confirm by electronically checking the boxes to the left

Tab 1 – General Application Documents

Checklist	Items to be Provided
Yes NA Plan ✔ ☐ ☐	PROJECT DESCRIPTION • Cover Letter with detailed project description
Yes NA Plan ✔ ☐ ☐	COMPLETED CHECKLIST – LEVEL III APPLICATION
Yes NA Plan ✔ ☐ ☐	RIGHT, TITLE AND INTEREST • Deeds, leases, or purchase and sales agreements
Yes NA Plan ✔ ☐ ☐	EVIDENCE OF STATE OR FEDERAL APPROVALS, if applicable • Permits or letters of non-jurisdiction, if applicable
Yes NA Plan ✔ ☐ ☐	ZONING ASSESSMENT • Table listing required and proposed uses and dimensional standards Zoning Assessment Table
Yes NA Plan ✔ ☐ ☐	EXISTING &/OR PROPOSED EASEMENTS OR COVENANTS, if applicable • Evidence of existing easements and any proposed easements
Yes NA Plan ✔ ☐ ☐	WAIVER REQUESTS • Written request for waiver describing request and reason. Waiver Table
Yes NA Plan ☐ ☐ ☐	FINANCIAL CAPABILITY • Letter or evidence from a financial institution or third party verifying financial capacity to undertake project
Yes NA Plan ✔ ☐ ☐	TECHNICAL CAPABILITY • Evidence of technical capability of applicant and consultants – resumes and/or examples of past projects

LEVEL II AND LEVEL III SITE PLAN STANDARDS AND SUBMISSION CHECKLIST

Provide assessment of compliance with standards and include supplemental documentation, as applicable.

Submit each Tab as one PDF file and bookmark the items as noted below

Tab 2 - TRANSPORTATION

Check list	Assess/Provide/Document:
Yes NA Plan ✔	**Transportation Analysis- Traffic Impact (14-526 (a) 1)** • Provisions for pedestrian, bicycle, vehicle, and loading circulation and incremental volume of traffic impacts • Traffic Impact Study (Technical Manual, Section 1) if applicable
Yes NA Plan ✔	**Access and Circulation (14-526 (a) 2 a)** • Access and internal circulation, addressing ADA access • Access and egress impacts on traffic flows • Description and use of drive-up features, if applicable
Yes NA Plan ✔	**Loading and Servicing (14-526 (a) 2 b)** • Loading and servicing needs, route and travel way geometrics for deliveries • Turning templates for delivery vehicles, if applicable
Yes NA Plan ✔	**Sidewalks (14-526 (a) 2 c)** • Sidewalks and condition along street frontages and internal walkways • Engineered details for ADA ramps and public sidewalk details meeting sidewalk materials policy and ADA ramp construction details as applicable (Technical Manual, Section 1)
Yes NA Plan ✔	**Public Transit (14-526 (a) 3), if applicable** • Existing available transit services • Proposed site plan design details, such as easement, pad base, and shelter
Yes NA Plan ✔	**Off-Street Parking: Vehicle & Motorcycle/Scooter) (14-526 (a) 4 a and c)** • Expected parking demand, proposed parking supply, ADA parking, and applicable Zoning Requirements • Address Technical Manual standards (Section 1) for curb cut separation and parking lot layout and locate on site plan
Yes NA Plan ✔	**Bicycle Parking (14-526 (a) 4 b)** • Address bicycle parking requirements and identify locations on-site • Construction details for bike racks (Technical Manual, Section 1)
Yes NA Plan ✔	**Snow Storage (14-526 (a) 4 d)** • Management plan for snow removal and locate snow storage areas on plan
Yes NA Plan ✔	**Traffic Demand Management (TDM) (14-526 (a) 5), if applicable** • Develop TDM with Trip Reduction Targets and Strategies

Tab 3 - ENVIRONMENTAL AND LANDSCAPE FEATURES

Check list	Assess/Provide/Document:
Yes NA Plan ☐ ✔ ☐	**Preservation of Significant Natural Features (14-526 (b) 1), if applicable** • Trees, plants, habitats listed on State or Federal list of endangered or threatened • High and moderate value waterfowl and wading habitat • Aquifers on Casco Bay Islands • Waterbodies (including wetlands, watercourses, significant vernal pools and floodplains) • Proposed preservation areas and protection measures • Documentation from environmental consultants, determinations from applicable state agencies
Yes NA Plan ✔ ☐ ☐	**Landscaping and Landscape Preservation (14-526 (b) 2 a)** • Preservation of trees and preservation within required zoning setbacks (Technical Manual, Section 4) • Protection measures of existing vegetation during construction • Protection measures within Shoreland Zone, if applicable
Yes NA Plan ✔ ☐ ☐	**Site Landscaping (14-526 (b) 2 b)** • Screening and buffering of service areas and between non-residential and residential uses • Planting plans with plant schedule and sizes (Technical Manual, Section 4)
Yes NA Plan ☐ ✔ ☐	**Parking Lot Landscaping (14-526 (b) 2 b ii), if applicable** • Landscaped islands within parking areas (Technical Manual, Section 4)
Yes NA Plan ✔ ☐ ☐	**Street Trees (14-526 (b) 2 b iii)** • Existing Heritage or Feature Trees on site and measures to preserve • Identify street trees on the plan meeting the site plan and Technical Manual standards (Section 4) or identify alternative measures, if applicable

Tab 4 - ENVIRONMENTAL AND STORMWATER

Check list	Assess/Provide/Document:
Yes NA Plan ✔ ☐ ✔	**Water Quality, Stormwater Management and Erosion Control (14-526 (b) 3 a)** • Stormwater report in compliance with Section 5 of Technical Manual and DEP Chapter 500 stormwater for basic, general and flooding standards, as applicable • Erosion control plan and measures • Evidence of compliance with Urban Impaired Stream Standards pursuant to DEP Chapter 500 stormwater, as applicable • Subsurface sanitary sewage disposal and groundwater protection

Tab 5 - PUBLIC INFRASTRUCTURE AND SAFETY	
Check list	Assess/Provide/Document:
Yes NA Plan ✔	**Consistency with City Master Plans (14-526 (c) 1)** • Identify consistency with master plans • Proposed easements, rights and improvements to connect or continue off-premises public infrastructure, as applicable
Yes NA Plan ✔	**Public Safety and Fire Prevention (14-526 (c))** • Address Crime Prevention through Environmental Design (CPTED) (Technical Manual, Section 3) • Emergency vehicle access • Address consistency with public safety standards (Technical Manual, Section 3) • Submit a code summary referring NFPA 1 and all Fire Department standards (Technical Manual, Section 3) – Fire Checklist
Yes NA Plan ✔	**Availability and Adequacy of Public Utilities (14-526 (c) 3) (Technical Manual, Sections 2 & 9)** • Electrical services, including providing underground services • Identify existing and proposed connections for public utilities and required public utility upgrades • Sewer line connections are required, if there is a main within 200 feet • Proposed solid waste management facilities on-site and management for the site • Written evidence of the ability to serve from utility companies, as applicable

Tab 6 - SITE DESIGN	
Check list	Assess/Provide/Document:
Yes NA Plan ✔	**Massing, Ventilations and Wind Impact (14-526 (d) 1)** • Wind and ventilation impacts on adjoining structures and/or adjacent public spaces. Wind study, if applicable • Bulk, location or height impacts on adjoining structures • Identify and locate HVAC equipment and venting away from public spaces and residential properties • Identify screening and manufacturing specifications for noise, if applicable
Yes NA Plan ✔	**Shadows (14-526 (d) 2), if applicable** • Shadow analysis of impacts on publicly accessible open space (Technical Manual, Section 11)
Yes NA Plan ✔	**Snow and Ice Loading (14-526 (d) 3)** • Building design to prevent snow and ice from loading or falling onto adjacent properties or public ways
Yes NA Plan ✔	**View Corridors (14-526 (d) 4), if applicable** • Protection of designated view corridors (Portland Design Manual, Appendix 1)

Yes NA Plan ✔	**Historic Resources (14-526 (d) 5), if applicable** • Identify developments within Historic Districts or affecting Designated Landmarks • Certificate of Appropriateness or other evidence • Identify Developments within 100 feet of Historic Districts or affecting Designated Landmarks. Advisory HP review may be required • Address preservation and documentation of Archaeological Resources
Yes NA Plan ✔ ✔	**Exterior Lighting (14-526 (d) 6)** • Cut sheets of on-site light fixtures and any architectural or specialty lights (Technical Manual, Section 12) • Engineered details for any lights proposed in street right-of-way (Technical Manual, Section 10)
Yes NA Plan ✔	**Noise and Vibration (14-526 (d) 7)** • Evidence of noise levels for equipment, such as equipment specifications, to demonstrate consistency with zoning requirements
Yes NA Plan ✔	**Signage and Wayfinding (14-526 (d) 8), if applicable** • Signage plan showing the location, dimensions, height and setback of all existing and proposed signs. Signs in Historic Districts are reviewed by Historic Preservation staff • Proposed commercial and directional signage on site
Yes NA Plan ✔	**Zone Related Design Standards (14-526 (d) 5)** • Address Historic Preservation Design Review, if applicable • Address any applicable design review standards by zone • Address submission requirements from Design Manual, page 1, addressing neighborhood context • Description of exterior materials, color, finish, and samples

Tab 7 - Construction Management Plan

Check list	
Yes NA Plan ✔	**Construction Management Plan** • Construction Management Document and Plan

Level II and Level III Site Plan Checklist

Please upload the following drawings with the listed details into e-Plan

☑ **RECENT BOUNDARY SURVEY** (stamped by Maine Licensed Surveyor)

Must be in compliance with Technical Manual, Section 13

SITE PLAN(s) (stamped by Maine Licensed Engineer) including:

☑ Existing Conditions

- Approximate location of structures on abutting property
- Topography
- Locate water courses
- Delineate wetlands
- Zone lines

☑ Proposed Site Plan

- Ground floor area, and grade elevations for all buildings

☑ Access, Circulation, and Parking

- Streets and intersections adjacent to site , any proposed geometric modifications
- Location, dimensions and materials of all existing and proposed driveways, vehicle, bicycle, & pedestrian access ways with corresponding curb lines
- Engineered specifications/ cross-sections for proposed driveways, sidewalks & paved areas
- Location and dimensions of proposed loading areas
- Existing and proposed transit infrastructure with dimensions/ engineering specifications
- Location of vehicle and bicycle parking with dimensions and engineering specifications

☑ Site Considerations

- Identify snow storage areas
- Location of fire hydrants
- Location of solid waste management facilities

☑ **UTILITY PLAN** including:

- Existing utilities on site and within public streets
- Location, sizing, and directional flows of all existing and proposed utilities
- Location and dimensions of off-premises public or publicly accessible infrastructure adjacent to site
- Electric utility infrastructure

☑ GRADING and DRAINAGE PLAN including:
• Existing grades and drainage • Proposed grades • Proposed stormwater management meeting Technical Manual (Section 5) standards • Location and proposed alteration of a water course • Preservation or alteration of wetlands
☑ EROSION CONTROL
• Must be in compliance with Technical Manual, Section 5
☑ LANDSCAPE PLAN including:
• Existing vegetation to be preserved and preservation measures • Proposed landscaping and buffers • Planting schedule
☐ RECORDING PLAT, if applicable
• IF SUBDIVISION: Must be in compliance with requirements of Section 14-496 (b)
☑ ARCHITECTURAL PLANS & RENDERINGS including:
• Exterior building elevations, color renderings, illustrations of all sides • Location and dimensions of all existing & proposed HVAC & mechanical equipment, all proposed screening • Provide context drawings, if applicable (Design Manual, page 1) • Floor plans

Standard to be Waived: Cite Ordinance or Technical Manual Standard	**Cite Standard Language:** Cite specific language of applicable Ordinance or Technical Manual Standard	**Waiver Being Sought:** Describe waiver being sought. Ex. – We are requesting a two-way parking lot drive aisle width of 20' feet.	**Justification for Waiver:** Address specific waiver criteria, if applicable, and document reasons for the waiver request.
Technical Manual Standard 1.14 - Parking Lot and Parking Space Design	Parking space dimensional requirements for a standard parking space: 9' wide by 18' long.	To allow non-compliant parking stall dimensions within the surface parking to vary from the required 9' width, as shown on Site Plan C-3.0.	The parking is all valet parking.
			.

TERRADYN CONSULTANTS, LLC

Pineland
Cumberland Hall
41 Campus Drive, Suite 101
New Gloucester, ME 04260

Portland
565 Congress Street, Suite 201
Portland, ME 04101

September 12, 2019 Project #1923

Planning Division
City of Portland
389 Congress Street, 4th Floor
Portland, ME 04101

Level III Site Plan Application
Longfellow Hotel
754 Congress Street

Dear: City of Portland Planning Division

Terradyn Consultants, LLC is pleased to submit the accompanying materials for a Level III Site Plan Application for the development of the Longfellow Hotel located at 754 Congress Street. The applicant is CenterWest, LLC and the owner of the parcel is S&A 786 Holding LLC by deed recorded in CCRD book 29094 page 171. The applicant intends to construct a four-story mixed used building including commercial uses and parking on the ground floor and a 46-room hotel on the upper floors. The parcel is 0.25 acres in size and depicted on the City of Portland Assessor's Map 54, Block G, Lots 1, 2 & 3 and located within the B-2b zoning district. The project site is currently developed with a gas station and convenience store and paved parking. The parcel is located at the corner of Congress and Neal Streets in Portland's west end.

The existing structures, gas tanks, and pavement will be removed from the site. The proposed project includes construction of the four-story building, which will take up the majority of the site. The project site's frontage will also be improved by reducing curb cuts and constructing a new sidewalk. Access to ground floor parking is proposed to come from Neil Street and all curb cuts on Congress Street will be closed. Pedestrian access to the hotel lobby will be from Congress Street. The commercial space on the first floor will be located at the corner of Congress and Neal Streets. The project site will be served by new underground utility services including water, sewer, electric and natural gas from existing utilities in surrounding streets.

The project will create 46 hotel rooms and a commercial unit so subdivision and Level III Site Plan approval from the Planning Board is required. We look forward to working with you and the Planning Staff in the review of this project. Please contact me at (207) 632-9010 or mtw@terradynconsultants.com if you have questions or require additional information.

Sincerely,
TERRADYN CONSULTANTS, LLC

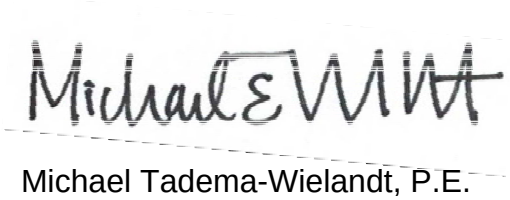

Michael Tadema-Wielandt, P.E.
Vice President

CITY OF PORTLAND
Department of Public Works
Christopher C. Branch, P.E., Director

Date: October 31, 2019

Re: Wastewater Capacity Authorization
Address: 754 Congress Street
Applicant: CenterWest, LLC
Planner: Andrew Tufts

Anticipated Wastewater Flow:

Estimate of Anticipated Design Flows				
Development	Unit Size	Number of Units	Gallons per Day per Unit	Total Gallons per Day
Existing flow to be removed				
Service Station	From PWD Records		2 HCF/ Month	(50)
Proposed flow				
Hotel With Private Bath	# Rooms	46	100 GPD/Room	4600
Hotel With Private Bath	# Employees	12	12 GPD/Employee	144
Eating Place – 3 Meals/Day	# Seats	20	30 GPD/Seat	600
Eating Place – 3 Meals/Day	# Employees	5	12 GPD/Employee	60
			Net Change	**+ 5354**
*Values based on STATE OF MAINE: SUBSURFACE WASTEWATER DISPOSAL RULES, most recent edition				

Comments:
The Department of Public Works, which includes the Water Resource Division, have reviewed and determined that the downstream sewers from the project address have the capacity to convey the estimated dry weather wastewater flows which will be generated from this development.
You are reminded that the sewers you are proposing to connect into convey both sanitary and stormwater (Combined Sewer) and therefore a backflow preventer is suggested.
If the City can be of further assistance, please contact me at all 874-8840 or brad@portlandmaine.gov
Sincerely,
CITY OF PORTLAND

Bradley A. Roland, P.E.
Senior Project Engineer

Portland, Maine Yes. Life's good here.

Planning & Urban Development Department

ZONING ANALYSIS Relevant Zone(s) B-2b

All Projects:

	Required	Proposed
Lot Size	none	10,692 sf
Area Per Dwelling Unit	-	n/a
Minimum Street Frontage	20 ft	114 ft
Front Yard Minimum	none	0
Front Yard Maximum	10 ft	0
Rear Yard	10 ft	10' 1"
Yard Right	0 on side street	8' 0"
Yard Left	5 ft	5' 1"
Side Street Setback	none	8' 0"
Step Back	15' rear, 5' side	15' rear, 5'side
Maximum Lot Coverage	-	-
Minimum Lot Coverage	-	-
Maximum Height	50 ft	50 ft
Open Space	-	-
Maximum Impervious Area	90%	90%
Pavement Setback	-	-
Floor Area Ratio	-	-
Off Street Parking Spaces	12	17
Loading Bays	-	0
Other 1		
Other 2		
Other 3		

Planned Residential Unit Developments (PRUD) Requirements

	Required	Proposed
Minimum Lot Size		
Minimum Lot Area per Dwelling		
Maximum # Units per Building		
Maximum Building Length		
Maximum Accessory Building Length		
Minimum Setbacks		
Minimum Building Separation		
Minimum Open Space		

Affordable Housing Density Bonuses (if applicable)

	Bonus Increase or Decrease	Maximum Allowable With Bonus	Proposed
Density			
Height			
Setback Reduction			
Recreation Space			
Maximum Accessory Building Length			
Minimum Setbacks			
Minimum Building Separation			
Minimum Open Space			
Explanatory Text 1 (optional):			
Explanatory Text 2 (optional):			
Explanatory Text 3 (optional):			

SITE DEVELOPMENT PLANS
FOR
LONGFELLOW HOTEL
754 CONGRESS STREET, PORTLAND, MAINE
SEPTEMBER 2019
PERMIT DOCUMENTS

APPLICANT:
CENTERWEST, LLC
795 CONGRESS STREET
PORTLAND, MAINE 04102

PROJECT PARCELS
CITY OF PORTLAND TAX ASSESSOR'S MAP, BLOCK, & LOT NUMBERS

MAP	BLOCK	LOTS	RECORD OWNER
54	G	1, 2, 3	S&A 786 HOLDING LLC

SHEET INDEX

C-1.0	COVER SHEET
C-1.1	GENERAL NOTES & LEGEND
1	BOUNDARY & TOPOGRAPHIC SURVEY
C-2.0	EXISTING CONDITIONS & DEMOLITION PLAN
C-2.1	CONSTRUCTION MANAGEMENT PLAN
C-3.0	SITE PLAN
C-4.0	GRADING, DRAINAGE & EROSION CONTROL PLAN
C-5.0	UTILITY PLAN
C-6.0	SITE DETAILS
C-6.1	UTILITY AND DRAINAGE DETAILS
C-6.2	EROSION CONTROL NOTES & DETAILS
L-1	PLANTING PLAN
P-1.0	PHOTOMETRIC LIGHTING PLAN

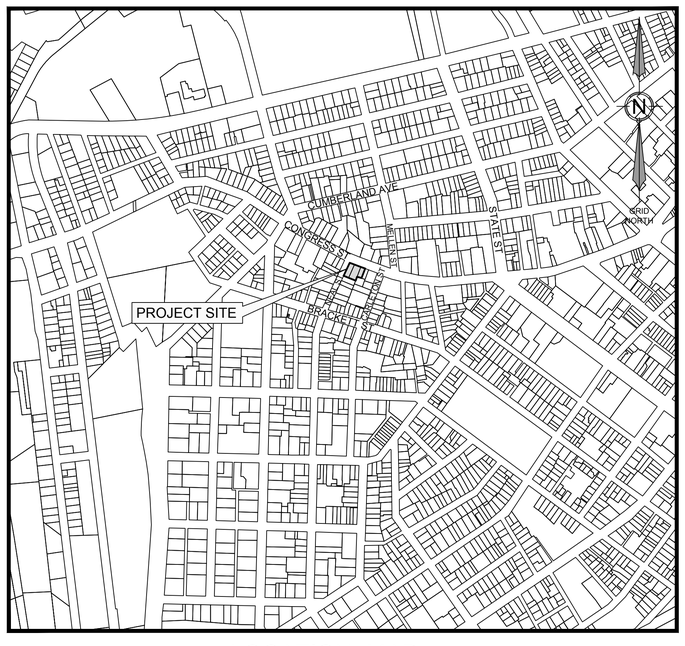

LOCATION MAP
SCALE: 1"=500'

PERMITS

TYPE OF PERMIT	GOVERNING BODY	STATUS
SITE PLAN/SUBDIVISION APPROVAL	CITY OF PORTLAND PLANNING AUTHORITY CITY HALL, 389 CONGRESS STREET PORTLAND, ME 04101 TEL. 207.874.8722	SUBMITTED 9/13/2019
BUILDING PERMIT	CITY OF PORTLAND CODE ENFORCEMENT OFFICE CITY HALL, 389 CONGRESS STREET PORTLAND, ME 04101 TEL. 207.874.8900	TO BE SUBMITTED BY BUILDING CONTRACTOR
UTILITY / STREET OPENING	CITY OF PORTLAND PUBLIC SERVICES DIVISION 55 PORTLAND STREET PORTLAND, ME 04101 TEL. 207.874.8801	TO BE FILED BY SITE CONTRACTOR

UTILITIES

SEWER/STORM
CITY OF PORTLAND
PUBLIC SERVICES DIVISION
55 PORTLAND STREET
PORTLAND, MAINE 04102
207.874.8850

WATER
PORTLAND WATER DISTRICT
22 DOUGLASS STREET
P.O. BOX 3553
PORTLAND, MAINE 04104
207.774.5961

ELECTRIC
CENTRAL MAINE POWER COMPANY
162 CANCO ROAD
PORTLAND, ME 04103
(207) 842-2367

TELEPHONE
FAIRPOINT COMMUNICATIONS
5 DAVIS FARM ROAD
P.O. BOX 11560
PORTLAND, MAINE 04103
888.984.1515

NATURAL GAS
UNITIL
376 RIVERSIDE INDUSTRIAL PARKWAY
PORTLAND, MAINE 04103
866.933.3821

DIG SAFE SYSTEM, INC.
TEL. 1-888-DIG-SAFE (344-7233)
WWW.DIGSAFE.COM

PREPARED BY:

CIVIL ENGINEER:
TERRADYN CONSULTANTS, LLC
565 CONGRESS STREET, SUITE 201
PORTLAND, MAINE 04101
207.926.5111
CONTACT: MICHAEL TADEMA-WIELANDT

ARCHITECT:
ARCHETYPE ARCHITECTS
48 UNION WARF
PORTLAND, ME 04101
207.772.6022
CONTACT: DAVID LLOYD

SURVEYOR:
OWEN HASKELL, INC.
309 U.S. ROUTE ONE, UNIT 10
FALMOUTH, MAINE 04105
207.774.0424
CONTACT: JOHN SCHWANDA

LANDSCAPE ARCHITECT:
ANTHONY MUENCH
94 COMMERCIAL STREET
PORTLAND, MAINE 04101
207.761.6621

STATE OF MAINE
MICHAEL E. TADEMA-WIELANDT
No. 13131
LICENSED PROFESSIONAL ENGINEER

DATE: 9/13/2019
P.E.: MICHAEL E. TADEMA-WIELANDT

NO.	DATE	REVISIONS	APP'D BY

565 CONGRESS STREET
SUITE 201
PORTLAND, ME 04102

41 CAMPUS DRIVE
SUITE 101
NEW GLOUCESTER, ME 04260

OFFICE: (207) 926-5111 FAX: (207) 221-1317
www.terradynconsultants.com

TERRADYN CONSULTANTS, LLC
Civil Engineering | Land Planning | Stormwater Design | Environmental Permitting

PERMIT DRAWING
NOT FOR CONSTRUCTION

PROJECT:
LONGFELLOW HOTEL
754 CONGRESS STREET
PORTLAND, ME 04101

SHEET TITLE:
COVER SHEET

CLIENT:
CENTERWEST, LLC
795 CONGRESS STREET
PORTLAND, MAINE 04102

DATE:	9/13/2019
SCALE:	AS NOTED
DESIGNED:	ARF
JOB NO:	1923
FILE:	1923 COVER.DWG
SHEET	C-1.0

GENERAL NOTES:

1. THIS PROJECT IS SUBJECT TO THE TERMS AND CONDITIONS OF ALL REGULATIONS ADMINISTERED BY THE LOCAL UTILITY COMPANIES AND THE CITY OF PORTLAND.
2. THE CONTRACTOR SHALL REFER TO THE ARCHITECTURAL PLANS FOR EXACT LOCATIONS AND DIMENSIONS OF THE ENTRANCES, EXITS, PRECISE BUILDING DIMENSIONS, AND EXACT BUILDING UTILITY ENTRANCE POINTS.
3. ALL REQUIRED AND NECESSARY INSPECTIONS AND/OR CERTIFICATIONS REQUIRED BY CODES AND/OR UTILITY SERVICE COMPANIES SHALL BE PERFORMED PRIOR TO ANNOUNCED BUILDING POSSESSION AND THE FINAL SERVICE CONNECTIONS.
4. THE CONTRACTOR IS SPECIFICALLY CAUTIONED THAT THE LOCATION AND/OR THE ELEVATION OF THE EXISTING UTILITIES AS SHOWN ON THESE PLANS IS BASED ON RECORDS OF THE VARIOUS UTILITY COMPANIES AND, WHERE POSSIBLE, MEASUREMENTS TAKEN IN THE FIELD. THIS INFORMATION IS NOT TO BE RELIED ON AS BEING EXACT OR COMPLETE. THE CONTRACTOR MUST CALL THE APPROPRIATE UTILITY COMPANY AND DIG SAFE (1-888-DIGSAFE). IT SHALL BE THE RESPONSIBILITY OF THE CONTRACTOR TO RELOCATE ALL EXISTING UTILITIES WHICH CONFLICT WITH THE PROPOSED IMPROVEMENTS SHOWN ON THE PLANS, AT NO EXTRA EXPENSE TO THE OWNER.
5. MAINTENANCE OF EROSION CONTROL MEASURES IS OF PARAMOUNT IMPORTANCE TO THE OWNER AND THE CONTRACTOR IS RESPONSIBLE FOR COMPLYING WITH ALL EROSION CONTROL MEASURES SHOWN ON THE PLANS. ADDITIONAL EROSION CONTROL MEASURES SHALL BE INSTALLED IF DEEMED NECESSARY BY ONSITE INSPECTIONS OF THE OWNER OR THEIR REPRESENTATIVES AT NO ADDITIONAL COST TO THE OWNER.
6. ALL MATERIAL SCHEDULES SHOWN ON THE PLANS ARE FOR GENERAL INFORMATION ONLY. THE CONTRACTOR SHALL PREPARE HIS OWN MATERIAL SCHEDULES BASED UPON HIS PLAN REVIEW. ALL SCHEDULES SHALL BE VERIFIED IN THE FIELD BY THE CONTRACTOR PRIOR TO ORDERING MATERIALS OR PERFORMING WORK.
7. ALL MATERIALS AND CONSTRUCTION METHODS SHALL CONFORM TO PROJECT CONTRACT SPECIFICATIONS, AND THE CITY OF PORTLAND TECHNICAL MANUAL STANDARDS, WHICHEVER IS MORE STRINGENT.
8. TOPOGRAPHIC AND BOUNDARY SURVEY INFORMATION WAS PROVIDED BY OWEN HASKELL, INC. ELEVATIONS BASED ON CITY DATUM FROM MONUMENT AT NORTHEAST CORNER CUMBERLAND AVENUE AND MELLEN STREET, ELEVATION 74.46' from city book l836/48.
9. FEMA MAP COMMUNITY PANEL NUMBER 230051 0013 B. THE SITE IS LOCATED IN A C ZONE.
10. THE PROPERTY SHOWN ON THIS PLAN MAY BE DEVELOPED AND USED ONLY AS DEPICTED IN THIS APPROVED PLAN. ALL ELEMENTS AND FEATURES OF THE PLAN AND ALL THE PROPERTY WHICH APPEARS IN THE RECORD OF THE PLANNING BOARD PROCEEDINGS ARE CONDITIONS OF THE APPROVAL. NO CHANGE FROM THE CONDITIONS OF APPROVALS IS PERMITTED UNLESS AN AMENDED PLAN IS FIRST SUBMITTED TO AND APPROVED BY THE PLANNING AUTHORITY.
11. ALL SIGNAGE SHALL CONFORM TO THE STANDARDS FOR SIZE, HEIGHT, LOCATION AND REFLECTIVITY SET FORTH IN THE MANUAL ON UNIFORM TRAFFIC CONTROL DEVICES (MUTCD).
12. ALL CURB SHALL CONFORM TO THE FOLLOWING SPECIFICATIONS AS NOTED ON THE PLANS: GRANITE CURB SHALL MEET THE REQUIREMENTS OF MaineDOT SPECIFICATIONS 609.03 AND CITY OF PORTLAND TECHNICAL STANDARDS.
13. ALL DIMENSIONING UNLESS OTHERWISE NOTED IS TO THE FACE OF CURB OR FACE OF BUILDING.
14. THE FACILITY IS SERVICED BY PUBLIC WATER, SEWER, NATURAL GAS, AND UNDERGROUND POWER.
15. THE CONTRACTOR IS REQUIRED TO NOTIFY THE CITY OF PORTLAND PUBLIC WORKS INSPECTION SERVICES DIVISION (874-8300 EXT. 8838), CODE ENFORCEMENT OFFICE AND DEVELOPMENT REVIEW COORDINATOR IN WRITING THREE (3) DAYS PRIOR TO THE BEGINNING OF CONSTRUCTION. A PRE-CONSTRUCTION MEETING MAY BE REQUIRED TO INCLUDE THE PUBLIC WORKS AUTHORITY OR DEVELOPMENT REVIEW COORDINATOR.
16. AN APPROVED SET OF PLANS AND ALL APPLICABLE PERMITS MUST BE AVAILABLE AT THE CONSTRUCTION SITE.
17. WARNING SIGNS, MARKERS, BARRICADES OR FLAGMEN MUST BE EMPLOYED ON ADJACENT STREETS AS NECESSARY. THE CONTRACTOR SHALL COORDINATE AND SEEK APPROVAL FROM THE PUBLIC SERVICE DIVISION FOR THE PLACEMENT/PARKING OF EQUIPMENT WITHIN THE PUBLIC RIGHT OF WAY.
18. CONSTRUCTION DEBRIS SHALL BE CONTAINERIZED AND DISPOSED OF IN ACCORDANCE WITH THE CITY OF PORTLAND'S SOLID WASTE ORDINANCE CHAPTER 12. ALL SALVAGED MATERIAL WITHIN THE PUBLIC R.O.W.(SIDEWALKS, BRICKS, GRANITE CURB) NOT REUSED SHALL BE DISPOSED OF AS DIRECTED BY THE PORTLAND PUBLIC SERVICES DEPARTMENT AT NO EXTRA COST TO THE OWNER.
19. ANY DAMAGE TO PUBLIC OR PRIVATE PROPERTY RESULTING FROM CONSTRUCTION ACTIVITIES SHALL BE REPAIRED BY THE CONTRACTOR AT THEIR EXPENSE.
20. PROPERTY MARKERS AND STREET LINE MONUMENTS SHALL BE PROPERLY PROTECTED AT ALL TIMES DURING CONSTRUCTION TO INSURE INTEGRITY. IF DISTURBED THEY SHALL BE REPLACED BY A SURVEYOR REGISTERED IN THE STATE OF MAINE AT THE CONTRACTOR'S EXPENSE.
21. A STREET OPENING PERMIT MUST BE OBTAINED FROM THE CITY OF PORTLAND PUBLIC WORKS DEPARTMENT PRIOR TO BEGINNING ANY WORK WITHIN THE CITY RIGHT-OF-WAY. ALL WORK WITHIN THE PUBLIC RIGHT OF WAY SHALL BE COMPLETED IN CONFORMANCE TO THE CITY'S RULES AND REGULATIONS FOR EXCAVATION ACTIVITIES IN PUBLIC RIGHT OF WAYS.
22. CONTRACTOR MUST MAINTAIN THROUGH TRAFFIC ON ADJACENT STREETS AT ALL TIMES.
23. ALL METHODS AND MATERIALS USED IN THE CONSTRUCTION OF THE IMPROVEMENTS IDENTIFIED HEREIN SHALL CONFORM TO THE CITY OF PORTLAND CONSTRUCTION AND TECHNICAL STANDARDS AND SPECIFICATIONS AND/OR CURRENT MaineDOT STANDARDS AND SPECIFICATIONS, WHICHEVER IS MORE STRINGENT.
24. RECORD DRAWINGS MUST INCLUDE ALL BURIED UTILITIES INCLUDING, BUT NOT LIMITED TO, BENDS, APPURTENANCES, AND OTHER FEATURES, TO BE LOCATED IN THE FIELD BY GIS AND RECORDED AS AN AS-BUILT PLAN BY THE CONTRACTOR AT THE END OF THE PROJECT. THIS PLAN SHALL ALSO BE PROVIDED TO THE OWNER.
25. THE CONTRACTOR SHALL REFER TO THE ARCHITECTURAL DRAWINGS PREPARED BY ARCHETYPE ARCHITECTS FOR EXACT LOCATIONS AND DIMENSIONS OF THE ENTRANCES, EXIT PORCHES, PRECISE BUILDING DIMENSIONS AND EXACT BUILDING UTILITY ENTRANCE POINTS.
26. ALL REQUIRED AND NECESSARY INSPECTIONS AND/OR CERTIFICATIONS REQUIRED BY CODES AND/OR UTILITY SERVICE COMPANIES SHALL BE PERFORMED PRIOR TO ANNOUNCED BUILDING POSSESSION AND THE FINAL SERVICE CONNECTIONS.
27. CONTRACTORS SHALL NOTIFY OPERATORS WHO MAINTAIN UNDERGROUND UTILITIES IN THE AREA OF PROPOSED EXCAVATION OR BLASTING AT LEAST THREE (3) BUT NOT MORE THAN (30) DAYS PRIOR TO COMMENCEMENT OF EXCAVATION OR DEMOLITION. CONTRACTORS SHALL BE RESPONSIBLE FOR COMPLIANCE WITH THE REQUIREMENTS OF 23 MRSA 3360-A.

GRADING AND DRAINAGE NOTES:

1. ALL STORM DRAIN PIPE SHALL BE SMOOTH BORE INTERIOR PROVIDING A MANNINGS ROUGHNESS COEFFICIENT OF n = 0.013 OR LESS. UNLESS A SPECIFIC PIPE MATERIAL IS CALLED FOR ON THE CONTRACT DRAWINGS. PVC PIPING SHALL NOT BE USED IN AREAS OF EXPOSED SUNLIGHT.
2. THE CONTRACTOR SHALL EXERCISE EXTREME CAUTION DURING EARTHWORK OPERATIONS TO INSURE THAT DISTURBANCE TO ANY STEEP SLOPE AREAS ARE MINIMIZED TO THE EXTENT PRACTICABLE.
3. THE CONTRACTOR IS HEREBY CAUTIONED THAT ALL SITE FEATURES SHOWN ARE BASED ON FIELD OBSERVATIONS BY THE SURVEYOR AND BY INFORMATION PROVIDED BY OTHERS. THE INFORMATION IS NOT TO BE RELIED ON AS BEING EXACT OR COMPLETE. THE CONTRACTOR SHALL CONTACT DIG SAFE (1-888-DIGSAFE) AT LEAST THREE (3) BUT NOT MORE THAN THIRTY (30) DAYS PRIOR TO COMMENCEMENT OF EXCAVATION OR DEMOLITION TO VERIFY HORIZONTAL AND VERTICAL LOCATION OF ALL UTILITIES.
4. ALL PAVING WITHIN THE PUBLIC R.O.W. SHALL BE PERFORMED IN ACCORDANCE WITH THE CITY OF PORTLAND RULES AND REGULATIONS FOR EXCAVATION ACTIVITIES IN THE PUBLIC R.O.W.
5. NO HOLES, TRENCHES OR STRUCTURES SHALL BE LEFT OPEN OVERNIGHT IN ANY EXCAVATION ACCESSIBLE TO THE PUBLIC OR IN PUBLIC RIGHTS-OF-WAY.
6. THE CONTRACTOR SHALL TAKE FULL RESPONSIBILITY FOR ANY CHANGES AND DEVIATION OF APPROVED PLANS NOT AUTHORIZED BY THE ARCHITECT/ENGINEER AND/OR CLIENT/OWNER.
7. CONTRACTOR SHALL INCORPORATE PROVISIONS AS NECESSARY IN CONSTRUCTION TO PROTECT EXISTING STRUCTURES AND PHYSICAL FEATURES THAT ARE OUTSIDE THE SCOPE OF WORK. THE CONTRACTOR SHALL MAINTAIN SITE STABILITY DURING CONSTRUCTION TO AVOID EROSION AND SEDIMENT TRANSPORT. CONTRACTOR SHALL RESTORE ALL AREAS TO A FINAL STABILIZED CONDITION AS DIRECTED BY DESIGN DRAWINGS.
8. CONTRACTOR SHALL VERIFY ALL DIMENSIONS AND CONDITIONS IN THE FIELD PRIOR TO FABRICATION AND ERECTION OF ANY MATERIAL. ANY UNUSUAL CONDITIONS SHALL BE REPORTED TO THE ENGINEER.
9. EXTERIOR GRADES AROUND PROPOSED STRUCTURE SHALL BE COORDINATED WITH FINAL BUILDING PLANS AND PROVIDE FOR ALL ACCESS OPENINGS.
10. SUBGRADE FILL PLACED BENEATH ALL PERMANENT PAVEMENT, SIDEWALK OR CONCRETE SURFACES EXCLUDING ANY BUILDING AREAS, SHALL BE GRANULAR BORROW. SUBGRADE FILL PLACED BENEATH ALL LANDSCAPE AREAS EXCEPT THOSE ADJACENT THE FOUNDATION SYSTEMS MAY BE A COMMON BORROW MATERIAL SUITABLE FOR EMBANKMENT CONSTRUCTION, FREE FROM FROZEN MATERIAL, PERISHABLE RUBBLE, PEAT, ORGANICS, ROCKS LARGER THAN 12" IN DIAMETER, VEGETATION AND OTHER MATERIAL UNSUITABLE FOR ROADWAY AND SUBGRADE CONSTRUCTION. EXCAVATED ON-SITE MATERIALS MAY BE USED FOR FILL PROVIDED THE MATERIAL IS FREE FROM UNSUITABLE MATERIAL DESCRIBED IN THIS NOTE AND UPON APPROVAL OF THE ENGINEER. EXCAVATED ONSITE MATERIALS MAY NOT BE USED AS COMPACTED STRUCTURAL FILL BENEATH THE BUILDING AREAS OR AS FOUNDATION BACKFILL. GRANULAR BORROW AND COMMON BORROW SHALL COMPLY WITH MaineDOT SPECIFICATIONS.
11. ALL FILLS SHALL BE PLACED IN LAYERS NOT MORE THAN 12" LOOSE DEPTH AND COMPACTED BY HEAVY COMPACTION EQUIPMENT. MINIMUM COMPACTION SHALL BE 95% OF MAXIMUM DENSITY ASTM 1557, MODIFIED AND FIELD DENSITY ASTM D2922 (NUCLEAR METHODS).
12. THE CONTRACTOR SHALL ANTICIPATE THAT GROUNDWATER WILL BE ENCOUNTERED DURING CONSTRUCTION AND SHALL INCLUDE SUFFICIENT COSTS WITHIN THEIR BID TO PROVIDE DEWATERING AS NECESSARY. NO SEPARATE PAYMENT SHALL BE MADE TO THE CONTRACTOR FOR DEWATERING.

CONSTRUCTION MANAGEMENT NOTES:

1. ALL CONSTRUCTION SHALL COMPLY WITH 2009 NFPA 1 CHAPTER 16 SAFE GUARDS DURING BUILDING CONSTRUCTION, ALTERATION AND DEMOLITION OPERATIONS.
2. ANY CUTTING AND WELDING WORK PERFORMED ONSITE SHALL REQUIRE A "HOT WORK" PERMIT FROM THE PORTLAND FIRE DEPARTMENT.
3. THE GENERAL CONTRACTOR SHALL POST EMERGENCY CONTACT INFORMATION ON THE PROJECT SITE PROPERTY DURING CONSTRUCTION IN THE EVENT OF AN AFTER HOURS EMERGENCY. THIS CONTACT INFORMATION SHALL ALSO BE PROVIDED TO THE PORTLAND FIRE DEPARTMENT.
4. IF THE SITE IS SECURED BY TEMPORARY OR PERMANENT FENCING WITH LOCKED GATES, THEN THE APPLICANT OR ASSIGNED REPRESENTATIVE SHALL PURCHASE A KNOX PADLOCK FROM THE PORTLAND FIRE DEPARTMENT TO ALLOW ACCESS BY THE PORTLAND FIRE DEPARTMENT.
5. STREETS SHALL MAINTAIN A 20' WIDTH FOR FIRE DEPARTMENT ACCESS AT ALL TIMES.
6. FIRE HYDRANTS SHALL NOT BE BLOCKED OR ENCLOSED BY FENCING. A 3' CLEARANCE SHALL BE MAINTAINED AT ALL TIMES AROUND FIRE HYDRANTS.

UTILITY NOTES:

1. ALL REQUIRED UTILITIES SERVING THE PROJECT SHALL BE COORDINATED BETWEEN THE SITE WORK CONTRACTOR AND DIVISION 22/26 CONTRACTOR(S). THE SITE WORK CONTRACTOR SHALL BE RESPONSIBLE TO EXTEND ALL PROPOSED UTILITIES TO WITHIN FIVE (5) FEET OF THE BUILDING TO A LOCATION COORDINATED WITH THE MECHANICAL AND ELECTRICAL SUBCONTRACTORS. THE BUILDING CONTRACTOR SHALL BE RESPONSIBLE FOR ALL UTILITIES WITHIN FIVE (5) FEET AND INSIDE THE BUILDING OR UNDER SLAB.
2. THE CONTRACTOR SHALL COORDINATE THE INSTALLATION OF AND/OR RELOCATION OF OVERHEAD AND UNDERGROUND TELEPHONE WITH FAIRPOINT COMMUNICATIONS. CONTRACTOR SHALL BE RESPONSIBLE FOR CONDUITS, PULL WIRES, TRENCHING AND BACKFILLING NECESSARY TO COMPLETE THE WORK.
3. THE CONTRACTOR SHALL COORDINATE THE INSTALLATION OF ELECTRIC SERVICE WITH CENTRAL MAINE POWER, THE TELECOMMUNICATIONS SERVICE WITH FAIRPOINT COMMUNICATIONS, AND THE CABLE SERVICE WITH TIME WARNER CABLE. ALL WORK SHALL CONFORM TO THE PROJECT SPECIFICATIONS OR UTILITY COMPANY STANDARDS, WHICHEVER IS MORE STRINGENT.
4. ADJUST ALL MANHOLES, CATCH BASINS, CURB BOXES, ETC. WITHIN LIMITS OF WORK TO FINISH GRADE AT NO ADDITIONAL EXPENSE TO THE OWNER.
5. ALL UNDERGROUND CONDUITS SHALL HAVE NYLON PULL ROPES TO FACILITATE PULLING CABLES.
6. THE CONTRACTOR SHALL OBTAIN, PAY FOR, AND COMPLY WITH ALL REQUIRED PERMITS, ARRANGE FOR ALL INSPECTIONS, AND SUBMIT COPIES OF ACCEPTANCE CERTIFICATES TO THE OWNER PRIOR TO COMPLETION OF THE PROJECT.
7. THE CONTRACTOR SHALL PROVIDE AND INSTALL ALL BOXES, FITTINGS, CONNECTORS, COVER PLATES AND OTHER MISCELLANEOUS ITEMS NOT NECESSARILY DETAILED ON THE DRAWINGS TO RENDER INSTALLATION OF UTILITIES COMPLETE AND OPERATIONAL, AT NO EXTRA EXPENSE TO THE OWNER.
8. A 10 FOOT MINIMUM EDGE TO EDGE HORIZONTAL SEPARATION SHALL BE PROVIDED BETWEEN ALL WATER AND SANITARY SEWER LINES. A 12 INCH OUTSIDE TO OUTSIDE VERTICAL SEPARATION SHALL BE PROVIDED AT ALL WATER AND SANITARY SEWER CROSSINGS.
9. THE CONTRACTOR SHALL PROVIDE TEMPORARY SERVICES AS REQUIRED TO PROVIDE CONTINUOUS SERVICE TO THE JOBSITE. TEMPORARY SERVICES SHALL COMPLY WITH ALL FEDERAL, STATE, LOCAL AND UTILITY COMPANY STANDARDS. COORDINATE ALL TEMPORARY SERVICES WITH UTILITY COMPANY, OWNER, AND AFFECTED BUSINESSES.
10. ALL SANITARY SERVICES AND APPURTENANCES SHALL BE CONSTRUCTED IN ACCORDANCE WITH THE CURRENT STANDARDS AND SPECIFICATIONS OF THE CITY OF PORTLAND PUBLIC WORKS DEPARTMENT. ALL SANITARY SERVICES AND APPURTENANCES TO BE ABANDONED SHALL BE PROPERLY RECORDED WITH PORTLAND PUBLIC WORKS ENGINEERING DEPARTMENT. A DIGITAL VIDEOTAPE SHALL BE MADE OF SANITARY SEWER SYSTEMS TO BE UTILIZED PRIOR TO CONSTRUCTION; UPSTREAM PIPES INTENDED FOR ABANDONMENT SHALL BE INSPECTED TO VERIFY THAT THEY NO LONGER SERVE OTHER FACILITIES.

PERMITTING NOTES:

1. THIS PROJECT IS SUBJECT TO THE TERMS AND CONDITIONS OF THE SITE PLAN REVIEW PERMIT FROM THE CITY OF PORTLAND WHICH WILL BE MADE A PART OF THE CONTRACT BID DOCUMENTS. THE CONSTRUCTION WILL BE GOVERNED BY THE ZONING ORDINANCES WHICH ARE AVAILABLE FOR VIEWING AT THE OFFICE OF THE ENGINEER OR THE MUNICIPAL OFFICE.

DIMENSIONAL REQUIREMENTS (B2-b ZONE)		
STANDARD	B2-b	PROVIDED
MIN. LOT SIZE	-	10,692 SF
MIN. FRONTAGE	20 FT	114 Ft
FRONT YARD	MIN=0 FT MAX=10 FT	VARIES: MIN=0.5 FT, MAX=2.3 FT
MIN. SIDE YARD	5 FT OR NONE ON A SIDE STREET	5 FT 8 FT (SIDE STREET)
MIN. REAR YARD	10 FT	10 FT
MAX. IMPERVIOUS AREA	90%	90%
MAXIMUM STRUCTURE HEIGHT	50 FT	50 FT
PARKING	12 SPACES (1 SPACE/EVERY 4 HOTEL ROOMS * 46 ROOMS)	17 SPACES
BICYCLE PARKING	2 BICYCLE SPACES PER EVERY 10 VEHICLE PARKING SPACES	4 SPACES

LEGEND

- EXISTING PROPERTY LINE
- PROJECT SITE BOUNDARY
- EXISTING SETBACK LINE
- PROPOSED EASEMENT
- 124 EXISTING MINOR CONTOUR
- 124 EXISTING MAJOR CONTOUR
- 124 PROPOSED CONTOUR
- SD EXISTING STORMDRAIN
- SD PROPOSED STORMDRAIN
- S EXISTING SANITARY SEWER
- S PROPOSED SANITRY SEWER
- W EXISTING WATER LINE
- W PROPOSED WATER LINE
- UD EXISTING UNDERDRAIN
- UD PROPSED UNDERDRAIN
- OHE EXISTING OVERHEAD ELECTRIC & TELEPHONE
- OHE PROPOSED OVERHEAD ELECTRIC & TELEPHONE
- UGE EXISTING UNDERGROUND ELECTRIC & TELEPHONE
- UGE PROPOSED UNDERGROUND ELECTRIC & TELEPHONE
- EXISTING EDGE OF PAVEMENT
- PROPOSED EDGE OF PAVEMENT
- EXISTING EDGE OF GRAVEL
- PROPOSED EDGE OF GRAVEL
- EXISTING CURB
- PROPOSED CURB
- PROPOSED FENCE
- SF SILT FENCE
- TP-A TEST PIT
- EXISTING VALVE
- PROPOSED VALVE
- EXISTING HYDRANT
- EXISTING LIGHT POLE
- PROPOSED LIGHT POLE
- EXISTING UTILITY POLE
- EXISTING CATCH BASIN
- PROPOSED CATCH BASIN
- EXISTING DRAIN MANHOLE
- PROPOSED DRAIN MANHOLE
- EXISTING SEWER MANHOLE
- PROPOSED SEWER MANHOLE
- 30.20 EXISTING SPOT GRADE
- 30.20 PROPOSED SPOT GRADE
- SURVEY CONTROL POINT
- EXISTING MONUMENT
- EXISTING IRON PIPE
- EXISTING SIGN
- PROPOSED SIGN
- EXISTING BUILDING
- PROPOSED BUILDING
- PROPOSED CONCRETE
- PROPOSED PAVEMENT
- PROPOSED BRICK

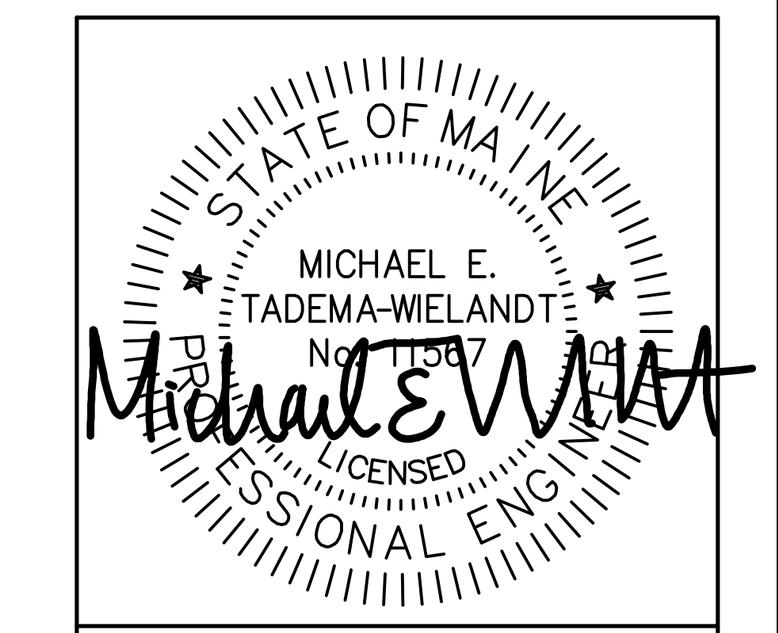

DATE: 9/13/2019
P.E.: MICHAEL E. TADEMA-WIELANDT

NO.	DATE	REVISIONS	APP'D BY

TERRADYN CONSULTANTS, LLC
41 CAMPUS DRIVE
SUITE 101
NEW GLOUCESTER, ME 04260
565 CONGRESS STREET
SUITE 201
PORTLAND, ME 04102
OFFICE: (207) 926-5111 FAX: (207) 221-1317
www.terradynconsultants.com
Civil Engineering | Land Planning | Stormwater Design | Environmental Permitting

PERMIT DRAWING
NOT FOR CONSTRUCTION

PROJECT:
LONGFELLOW HOTEL
754 CONGRESS STREET
PORTLAND, ME 04101

SHEET TITLE:
GENERAL NOTES & LEGEND

CLIENT:
CENTERWEST, LLC
795 CONGRESS STREET
PORTLAND, MAINE 04102

DATE:	9/13/2019
SCALE:	AS NOTED
DESIGNED:	ARF
JOB NO:	1923
FILE:	1923 COVER.DWG
SHEET	C-1.1

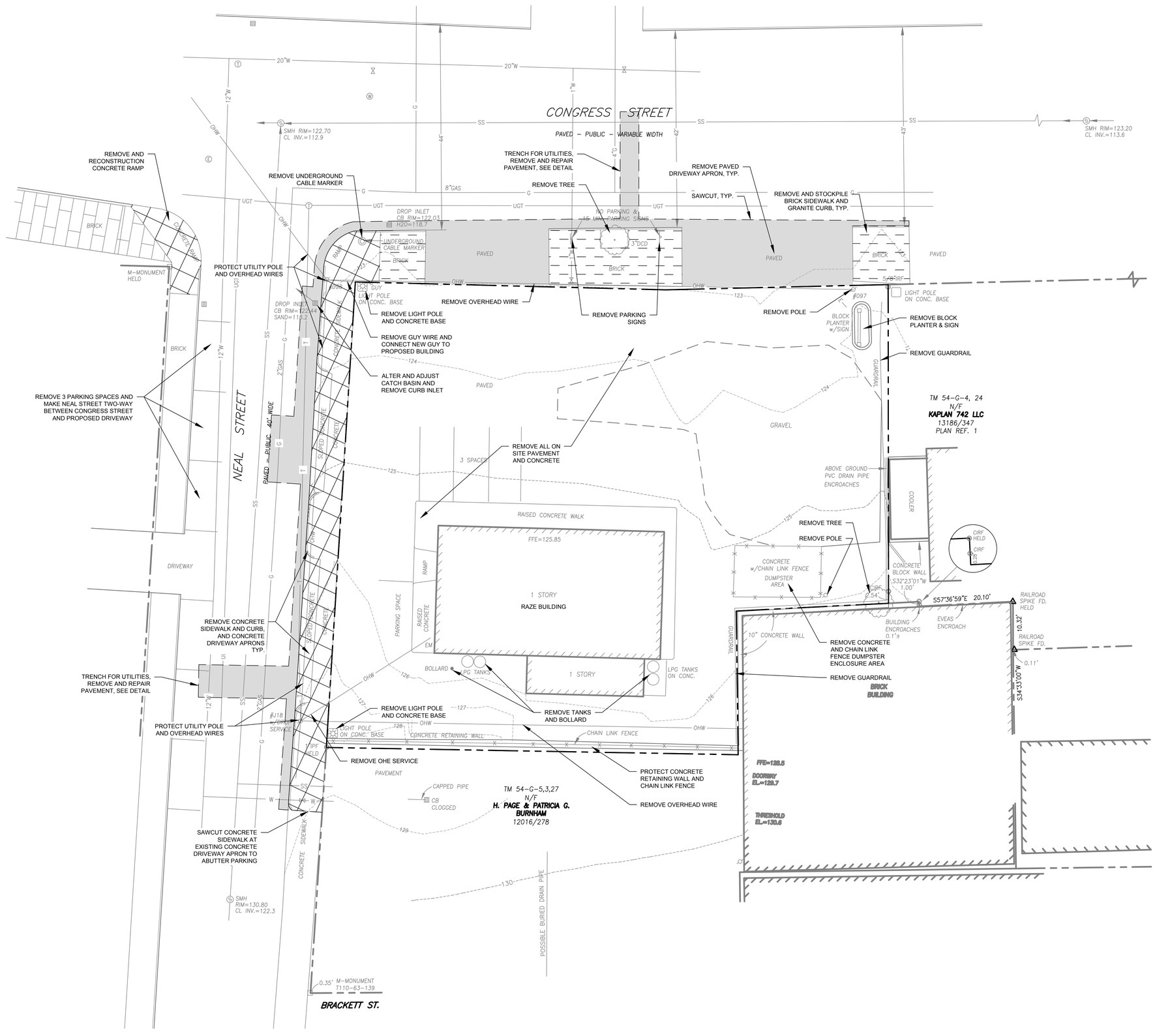

GRAPHIC SCALE

10 0 5 10 20 40

(IN FEET)
1 inch = 10 ft.

STATE OF MAINE
MICHAEL E. TADEMA-WIELANDT
NUMBER 10121
REGISTERED PROFESSIONAL ENGINEER

DATE: 9/13/2019
P.E.: MICHAEL E. TADEMA-WIELANDT

NO.	DATE	REVISIONS	APP'D BY

TERRADYN CONSULTANTS, LLC
Civil Engineering | Land Planning | Stormwater Design | Environmental Permitting
41 CAMPUS DRIVE, SUITE 101, NEW GLOUCESTER, ME 04260
565 CONGRESS STREET, SUITE 201, PORTLAND, ME 04102
OFFICE: (207) 926-5111 FAX: (207) 221-1317
www.terradynconsultants.com

PERMIT DRAWING
NOT FOR CONSTRUCTION

PROJECT: LONGFELLOW HOTEL
754 CONGRESS STREET
PORTLAND, ME 04101

SHEET TITLE: EXISTING CONDITIONS & DEMOLITION PLAN

CLIENT: CENTERWEST, LLC
795 CONGRESS STREET
PORTLAND, MAINE 04102

DATE:	9/13/2019
SCALE:	1"=10'
DESIGNED:	ARF
JOB NO:	1923
FILE:	1923 B.DWG
SHEET	C-2.0

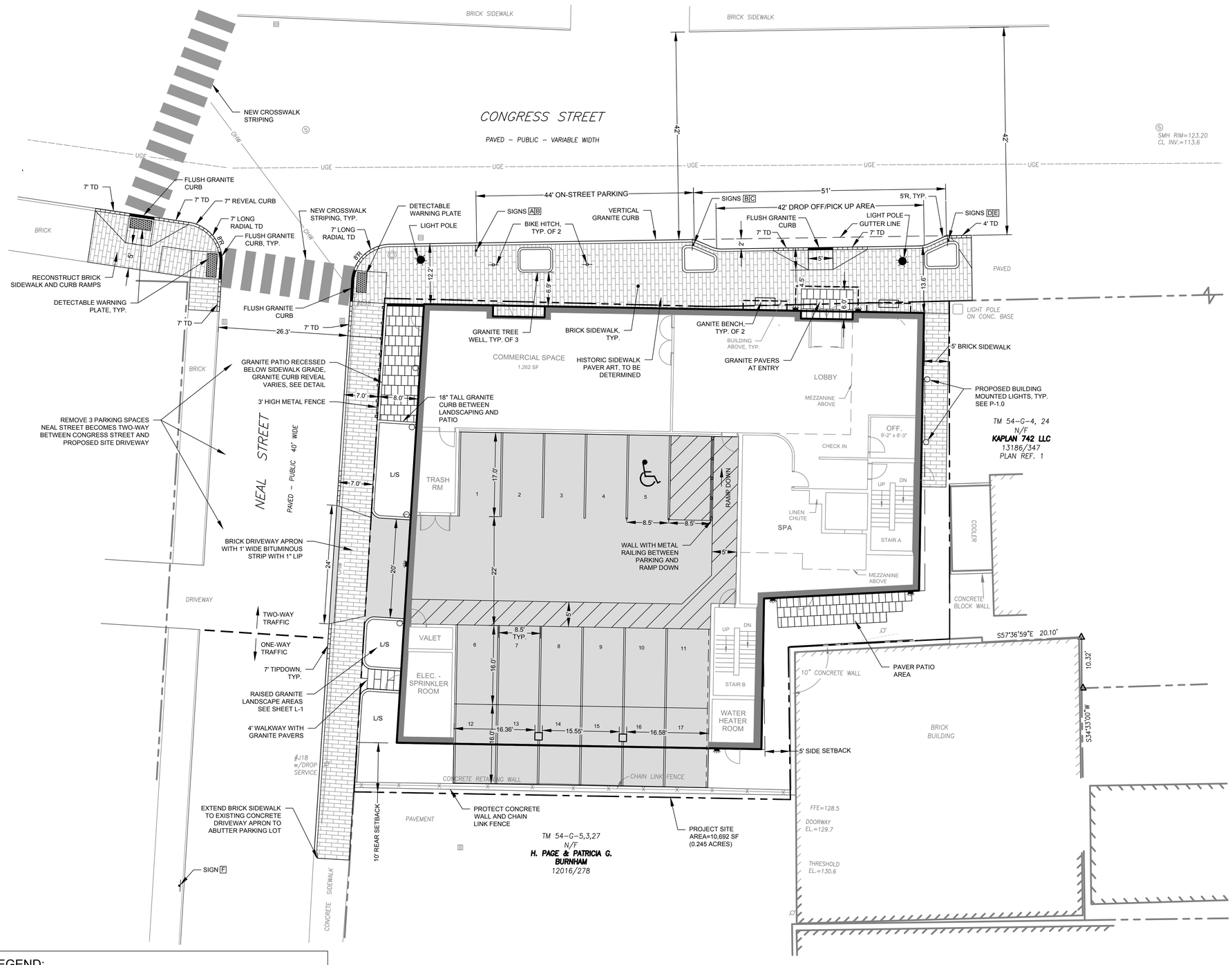

SIGN LEGEND:

A	B	C	D	E	F
NO PARKING FROM HERE TO CORNER →	15 MINUTE PARKING	NO PARKING HOTEL LOADING ONLY ←	NO PARKING HOTEL LOADING ONLY →	NO PARKING ←	ONE WAY ←
12"X18"	12"X18"	12"X18"	12"X18"	12"X18"	12"X18"

NOTE: PARKING SIGNS TO BE APPROVED BY THE TRAFFIC DIVISION OF THE CITY OF PORTLAND PUBLIC WORKS DEPARTMENT.

GRAPHIC SCALE

10 0 5 10 20 40

(IN FEET)
1 inch = 10 ft.

STATE OF MAINE
MICHAEL E. TADEMA-WIELANDT
REGISTERED PROFESSIONAL ENGINEER

DATE: 12/5/2019
P.E.: MICHAEL E. TADEMA-WIELANDT

NO.	DATE	REVISIONS	APP'D BY
2	12/5/2019	REVISED PER STAFF REVIEW COMMENTS	MTW
1	10/29/2019	REVISED PER DPW REVIEW COMMENTS	MTW

TERRADYN CONSULTANTS, LLC
Civil Engineering | Land Planning | Stormwater Design | Environmental Permitting
41 CAMPUS DRIVE SUITE 101 NEW GLOUCESTER, ME 04260
OFFICE: (207) 926-5111 FAX: (207) 221-1317
www.terradynconsultants.com
565 CONGRESS STREET SUITE 201 PORTLAND, ME 04102

PERMIT DRAWING
NOT FOR CONSTRUCTION

PROJECT:
LONGFELLOW HOTEL
754 CONGRESS STREET
PORTLAND, ME 04101

SHEET TITLE:
SITE PLAN

CLIENT:
CENTERWEST, LLC
795 CONGRESS STREET
PORTLAND, MAINE 04102

DATE:	9/13/2019
SCALE:	1"=10'
DESIGNED:	ARF
JOB NO:	1923
FILE:	1923 B.DWG
SHEET	C-3.0

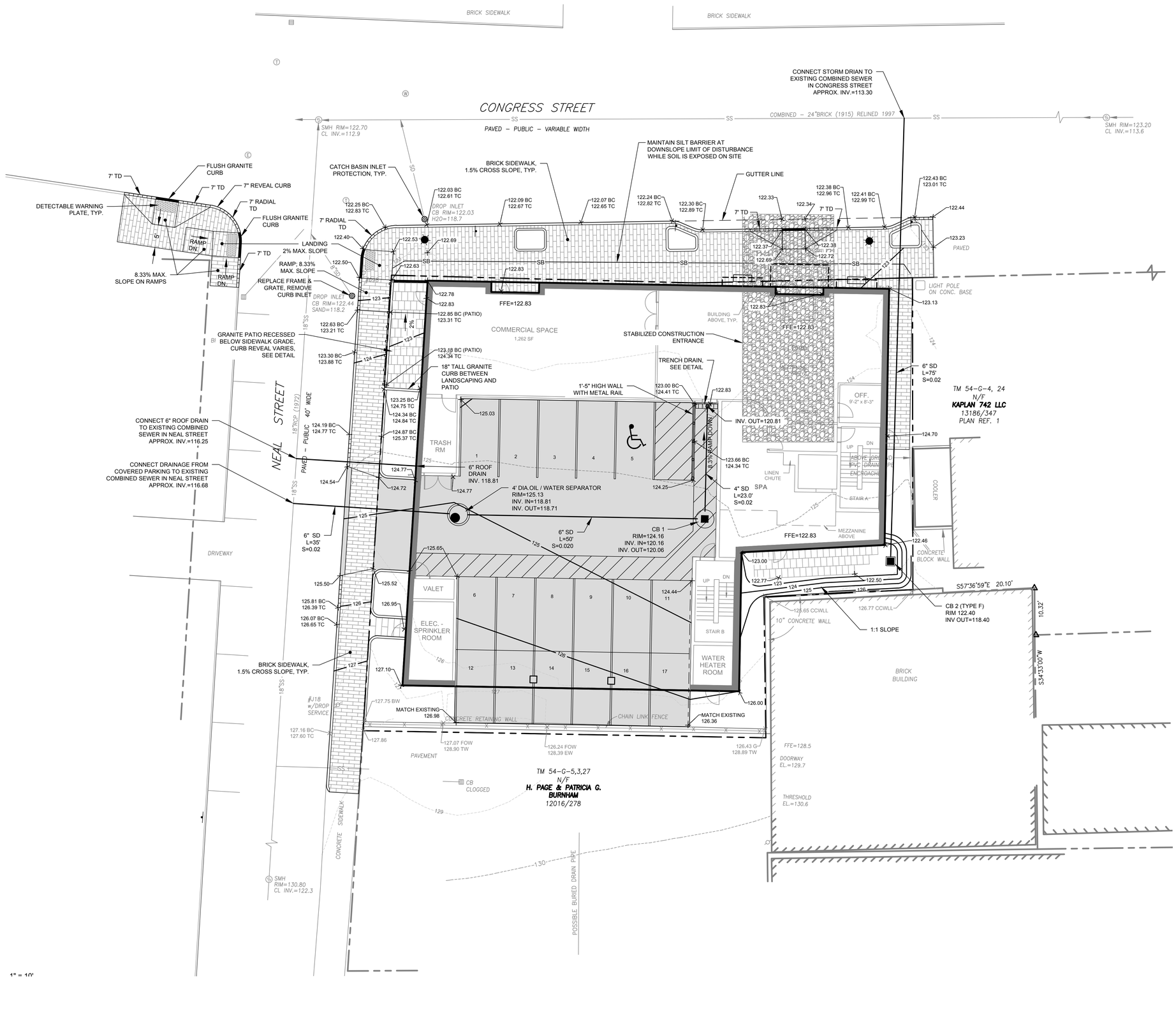

1" = 10'

GRAPHIC SCALE

10 0 5 10 20 40

(IN FEET)
1 inch = 10 ft.

STATE OF MAINE
MICHAEL E. TADEMA-WIELANDT
REGISTERED PROFESSIONAL ENGINEER

DATE: 12/5/2019
P.E.: MICHAEL E. TADEMA-WIELANDT

NO.	DATE	REVISIONS	APP'D BY
2	12/5/2019	REVISED PER STAFF REVIEW COMMENTS	MTW
1	10/29/2019	REVISED PER DPW REVIEW COMMENTS	MTW

TERRADYN CONSULTANTS, LLC
Civil Engineering | Land Planning | Stormwater Design | Environmental Permitting
41 CAMPUS DRIVE, SUITE 101, NEW GLOUCESTER, ME 04260
OFFICE: (207) 926-5111 FAX: (207) 221-1317
www.terradynconsultants.com
505 CONGRESS STREET, SUITE 201, PORTLAND, ME 04102

PERMIT DRAWING
NOT FOR CONSTRUCTION

PROJECT:
LONGFELLOW HOTEL
754 CONGRESS STREET
PORTLAND, ME 04101

SHEET TITLE:
GRADING, DRAINAGE & EROSION CONTROL PLAN

CLIENT:
CENTERWEST, LLC
795 CONGRESS STREET
PORTLAND, MAINE 04102

DATE:	9/13/2019
SCALE:	1"=10'
DESIGNED:	ARF
JOB NO:	1923
FILE: 1923 B.DWG	
SHEET	C-4.0

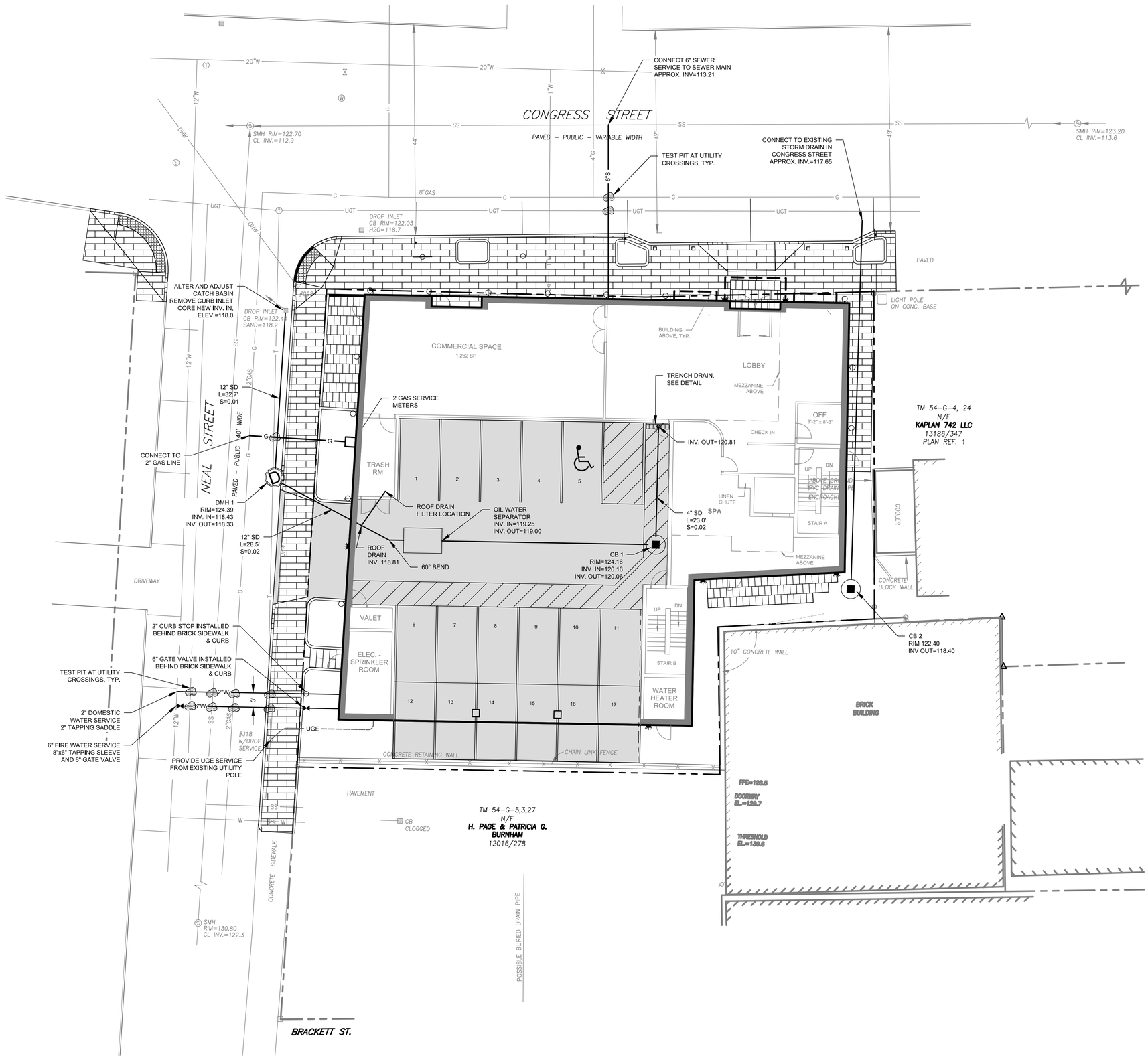

STATE OF MAINE
MICHAEL E. TADEMA-WIELANDT
REGISTERED PROFESSIONAL ENGINEER

DATE: 9/13/2019
P.E.: MICHAEL E. TADEMA-WIELANDT

NO.	DATE	REVISIONS	APP'D BY

TERRADYN CONSULTANTS, LLC
Civil Engineering | Land Planning | Stormwater Design | Environmental Permitting
41 CAMPUS DRIVE
SUITE 101
NEW GLOUCESTER, ME 04260
OFFICE: (207) 926-5111 FAX: (207) 221-1317
www.terradynconsultants.com
565 CONGRESS STREET
SUITE 201
PORTLAND, ME 04102

PERMIT DRAWING
NOT FOR CONSTRUCTION

PROJECT:
LONGFELLOW HOTEL
754 CONGRESS STREET
PORTLAND, ME 04101

SHEET TITLE:
UTILITY PLAN

CLIENT:
CENTERWEST, LLC
795 CONGRESS STREET
PORTLAND, MAINE 04102

DATE:	9/13/2019
SCALE:	1"=10'
DESIGNED:	ARF
JOB NO:	1923
FILE: 1923 B.DWG	
SHEET	C-5.0

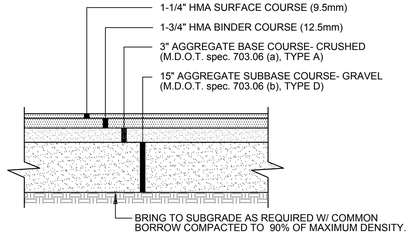

NOTES:

1. COMPACT GRAVEL SUBBASE COURSE TO 92% OF MAXIMUM DENSITY USING HEAVY ROLLER COMPACTION.
2. CONTRACTOR SHALL SET GRADE STAKES MARKING SUBBASE AND FINISH GRADE ELEVATIONS FOR CONSTRUCTION REFERENCE.

TYP. PAVED PARKING LOT SECTION

NOT TO SCALE

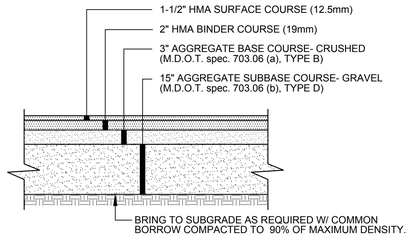

NOTES:

1. FOR USE ON LOCAL STREETS WITHIN THE CITY OF PORTLAND

TYP. SECTION - PAVEMENT REPAIR IN CITY RIGHT OF WAY

NOT TO SCALE

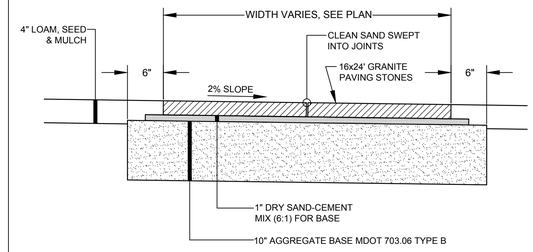

GRANITE PAVERS

NOT TO SCALE

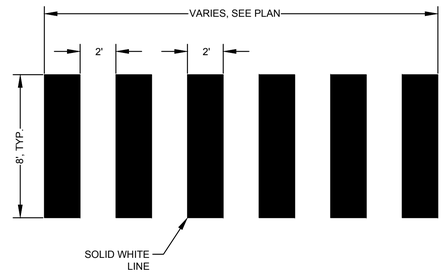

CROSSWALK STRIPING DETAIL

NOT TO SCALE

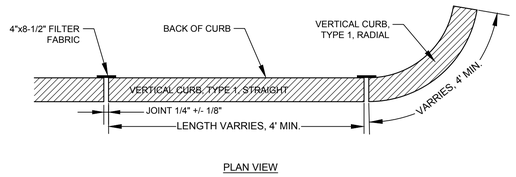

PLAN VIEW

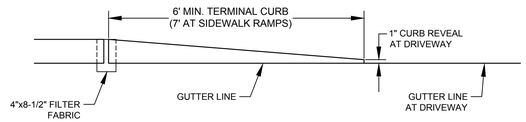

TERMINAL CURB PROFILE

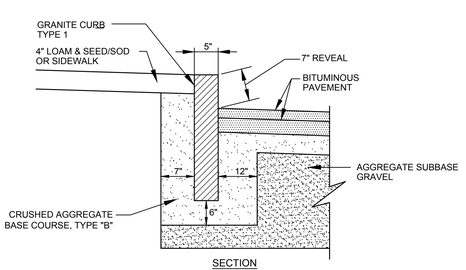

SECTION

NOTES:

1. MIN. LENGTH OF STRAIGHT CURB STONES: 4', MAX. LENGTH: 8'
2. CIRCULAR CURB REQ. FOR RADIUS LESS THAN 50'
3. BASE GRAVEL SHALL BE COMPACTED TO A FIRM EVEN SURFACE PRIOR TO SETTING OF CURB.

VERTICAL GRANITE CURB

NOT TO SCALE

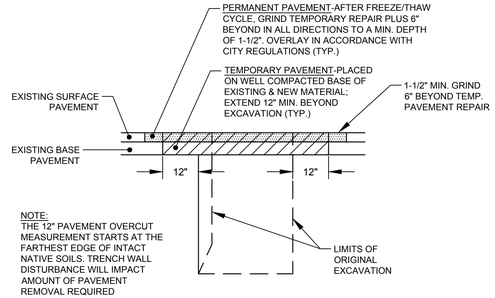

NOTE:
THE 12" PAVEMENT OVERCUT MEASUREMENT STARTS AT THE FARTHEST EDGE OF INTACT NATIVE SOILS. TRENCH WALL DISTURBANCE WILL IMPACT AMOUNT OF PAVEMENT REMOVAL REQUIRED

TYP. EXCAVATION IN CITY RIGHT OF WAY

NOT TO SCALE

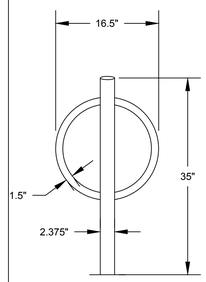

NOTES:

PRODUCT:
DERO BIKE HITCH AS MANUFACTURED BY DERO BIKE RACKS

CAPACITY:
2 BIKES

MATERIALS:
CENTERBEAM 2" SCHEDULE 40 PIPE (2.375" OD)
RING 1.5" OD 11 GAUGE TUBE

INSTALLATION METHODS:
IN-GROUND MOUNT IS EMBEDDED INTO CONCRETE BASE, SURFACE MOUNT HAS ONE 5"x6" FOOT WHICH IS ANCHORED TO THE GROUND WITH FOUR ANCHORS

SETBACKS:
24" PARALLEL TO WALL
54" PERPENDICULAR TO WALL
36" PARALLEL TO STREET
76" PERPENDICULAR TO STREET

BIKE HITCH

NOT TO SCALE

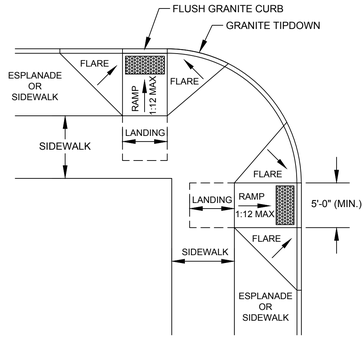

NOTES:

1. RAMPS SHALL BE CONSTRUCTED IN ACCORDANCE WITH THE AMERICANS WITH DISABILITIES ACT (ADA).
2. SEE SITE PLAN FOR DEVIATION FROM TYPICAL RAMP LAYOUT.
3. LANDING AREA MAY BE REQUIRED BASED ON SIDEWALK DIMENSIONS.
4. GRANITE CURB ADJACENT TO LANDING SHALL BE FLUSH WITH STREET.
5. SEE SITE PLAN FOR SIDEWALK MATERIAL.
6. FLARED SECTIONS SHALL MATCH THE SURFACE MATERIAL USED FOR THE SIDEWALK CONSTRUCTION.
7. FLARE MINIMUM LENGTH:
   4'-0" - SIDEWALK WITH ESPLANADE
   7'-0" - SIDEWALK ONLY

SIDEWALK RAMP AT INTERSECTION

NOT TO SCALE

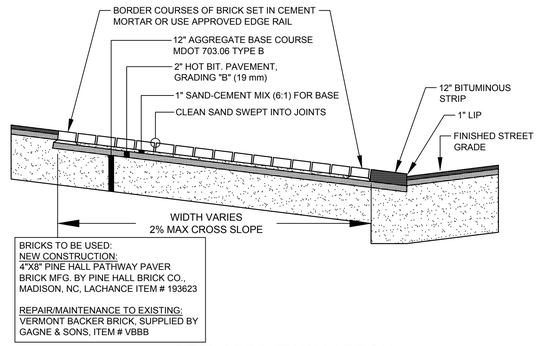

BRICKS TO BE USED:
NEW CONSTRUCTION:
4"X8" PINE HALL PATHWAY PAVER
BRICK MFG. BY PINE HALL BRICK CO., MADISON, NC, LACHANCE ITEM # 193623

REPAIR/MAINTENANCE TO EXISTING:
VERMONT BACKER BRICK, SUPPLIED BY GAGNE & SONS, ITEM # VBBB

BRICK DRIVEWAY APRON

NOT TO SCALE

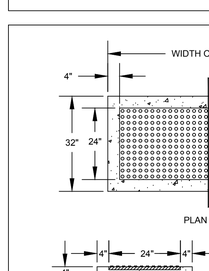

SECTION A-A

NOTES:

1. DETECTABLE WARNING PLATES TO BE DURALAST® AS MANUFACTURED BY EJ.
2. PLATES SHALL HAVE A NATURAL FINISH
3. PLATE SHALL BE ORIENTED SO THAT THE DOMES ARE PARALLEL AND PERPENDICULAR TO THE PRIMARY DIRECTION OF TRAVEL
4. RADIAL PLATES SHALL BE USED AT RADIAL CURB RAMPS

DETECTABLE WARNING PLATE DETAIL

NOT TO SCALE

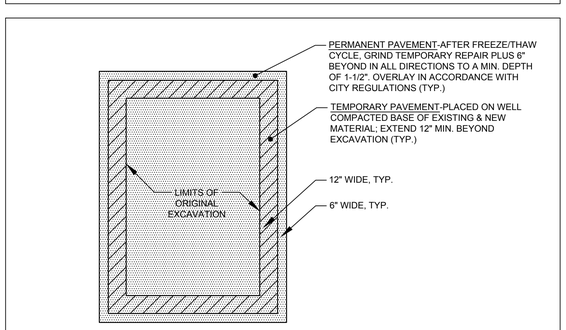

PLAN VIEW OF MINOR EXCAVATION PAVEMENT REPAIR

NOT TO SCALE

BRICKS TO BE USED:

NEW CONSTRUCTION:
4"X8" PINE HALL PATHWAY PAVER BRICK; MFG. BY PINE HALL BRICK CO., MADISON, NORTH CAROLINA. LACHANCE ITEM # 193623, PINE HALL PATHWAY PAVER BRICK.

REPAIR/MAINTENANCE TO EXISTING BRICK SIDEWALKS:
VERMONT PAVER; SUPPLIED BY GAGNE AND SONS. "VERMONT BACKER BRICK", ITEM: VBBB

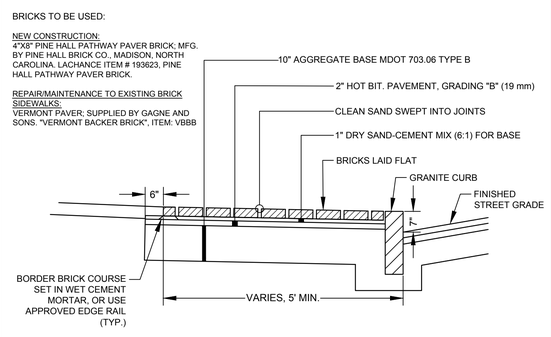

BRICK WALKWAY & GRANITE CURB

NOT TO SCALE

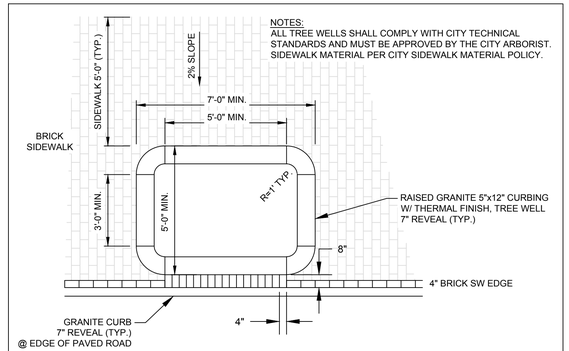

NOTES:
ALL TREE WELLS SHALL COMPLY WITH CITY TECHNICAL STANDARDS AND MUST BE APPROVED BY THE CITY ARBORIST. SIDEWALK MATERIAL PER CITY SIDEWALK MATERIAL POLICY.

TREE WELL DETAIL

NOT TO SCALE

MICHAEL E. TADEMA-WIELANDT
STATE OF MAINE
LICENSED
PROFESSIONAL ENGINEER

DATE: 12/5/2019
P.E.: MICHAEL E. TADEMA-WIELANDT

NO.	DATE	REVISIONS	APP'D BY
2	12/5/2019	REVISED PER STAFF REVIEW COMMENTS	MTW

TERRADYN CONSULTANTS, LLC
Civil Engineering | Land Planning | Stormwater Design | Environmental Permitting
41 CAMPUS DRIVE, SUITE 103, NEW GLOUCESTER, ME 04260
OFFICE: (207) 926-5111 FAX: (207) 221-1317
www.terradynconsultants.com
565 CONGRESS STREET, SUITE 201, PORTLAND, ME 04102

PERMIT DRAWING
NOT FOR CONSTRUCTION

PROJECT:
LONGFELLOW HOTEL
754 CONGRESS STREET
PORTLAND, ME 04101

SHEET TITLE:
SITE DETAILS

CLIENT:
CENTERWEST, LLC
705 CONGRESS STREET
PORTLAND, MAINE 04102

DATE:	9/13/2019
SCALE:	N.T.S.
DESIGNED:	ARF
JOB NO:	1923
FILE: 1923-D.DWG	

SHEET
C-6.0

NOTES:

1. A FLEXIBLE PIPE TO MANHOLE CONNECTOR SHALL BE EMPLOYED IN THE CONNECTION OF ALL PIPE TO MANHOLE JUNCTIONS.

2. THE CONNECTOR SHALL BE KOR-N-SEAL AS MANUFACTURED BY NPC SYSTEMS, INC., OF MILFORD, NH OR EQUAL.

3. THE CONNECTOR SHALL BE THE SOLE ELEMENT RELIED ON TO ASSURE A FLEXIBLE WATERTIGHT SEAL OF THE PIPE TO MANHOLE, NO ADHESIVES OR LUPRICANTS SHALL BE EMPLOYED IN THE INSTALLATION OF THE CONNECTORS TO THE MANHOLE. THE RUBBER FOR THE CONNECTOR SHALL COMPLY TO ASTM C923 AND CONSIST OF EPDM AND ELASTOMERS KNOWN TO BE RESISTANT TO OZONE, WEATHER ELEMENTS, CHEMICALS, INCLUDING ACIDS, ALKALIS, ANIMAL AND VEGETABLE FATS, OILS AND PETROLEUM PROCUCTS FROM SPILLS.

4. ALL STAINLESS STEEL ELEMENTS OF THE CONNECTOR SHALL BE TOTALLY NON-MAGNETIC SERIES 304 STAINLESS, EXCLUDING THE WORM SCREW USED FOR TIGHTENING THE STEEL BAND SHALL BE TORQUED BY A BREAK-AWAY TORQUE WRENCH AVAILABLE FROM THE PRECAST MANHOLE SUPPLIER, AND SET AT 60/70 IN./LBS.

5. THE CONNECTOR SHALL BE INSTALLED IN THE MANHOLE WALL BY ACTIVATING THE EXPANDING MECHANISM IN STRICT ACCORDANCE WITH THE RECOMMENDATION OF THE CONNECTOR MANUFACTURER.

6. THE CONNECTOR SHALL BE OF A SIZE SPECIFICALLY DESIGNED FOR THE PIPE MATERIAL AND SIZE BEING UTILIZED ON THE PROJECT.

7. ALL CONNECTORS WHICH ARE CAPPED AWAITING PIPE INSTALLATION AT A LATER DATE MUST BE RESTRAINED.

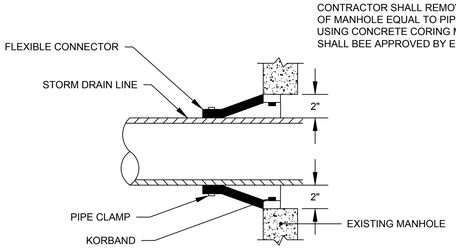

CORE AND SEAL CONNECTION TO EXISTING STORM DRAIN MANHOLE

NOT TO SCALE

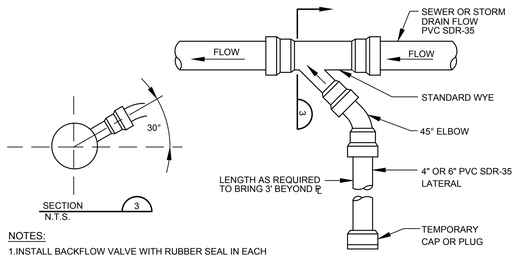

NOTES:

1.INSTALL BACKFLOW VALVE WITH RUBBER SEAL IN EACH FOUNDATION DRAIN SERVICE.

2. IF SUMP PUMP IS UTILIZED INSTALL CHECK VALVE AT SUMP PUMP.

SEWER / ROOF DRAIN SERVICE CONNECTION

NOT TO SCALE

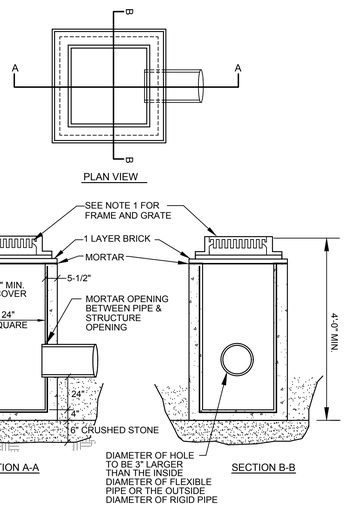

NOTES:

1. FRAME SHALL BE FOR 24" SQUARE GRATE - LEBARON TYPE "F" SQUARE FRAME (LF 245) 4 FLANGE OR ETHERIDGE SQUARE FRAME S24G. GRATE SHALL BE 24"x24" CAST IRON.

2. ENTIRE CATCH BASIN WITH EXCEPTION OF LEVELING BRICK FRAME AND GRATE TO BE PRECAST AS SINGLE PORTLAND CEMENT CONCRETE UNIT.

TYP. TYPE "F" CATCH BASIN

NOT TO SCALE

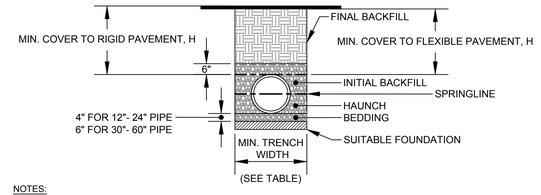

NOTES:

1. ALL PIPE SYSTEMS SHALL BE INSTALLED IN ACCORDANCE WITH ASTM D2321, "STANDARD PRACTICE FOR UNDERGROUND INSTALLATION OF THERMOPLASTIC PIPE FOR SEWERS AND OTHER GRAVITY FLOW APPLICATIONS", LATEST ADDITION

2. MEASURES SHOULD BE TAKEN TO PREVENT MIGRATION OF NATIVE FINES INTO BACKFILL MATERIAL, WHEN REQUIRED.

3. FOUNDATION: WHERE THE TRENCH BOTTOM IS UNSTABLE, THE CONTRACTOR SHALL EXCAVATE TO A DEPTH REQUIRED BY THE ENGINEER AND REPLACE WITH SUITABLE MATERIAL AS SPECIFIED BY THE ENGINEER, AS AN ALTERNATIVE AND AT THE DISCRETION OF THE DESIGN ENGINEER, THE TRENCH BOTTOM MAY BE STABILIZED USING A GEOTEXTILE MATERIAL.

4. BEDDING: SUITABLE MATERIAL SHALL BE CLASS I, II OR III. THE CONTRACTOR SHALL PROVIDE DOCUMENTATION FOR MATERIAL SPECIFICATION TO ENGINEER. UNLESS OTHERWISE NOTED BY THE ENGINEER, MINIMUM BEDDING THICKNESS SHALL BE 4" (100mm) FOR 4"-24" (100mm-600mm); 6" (150mm) FOR 30"-60" (750mm-900mm).

5. INITIAL BACKFILL: SUITABLE MATERIAL SHALL BE CLASS I, II OR III IN THE PIPE ZONE EXTENDING NOT LESS THAN 6" ABOVE CROWN OF PIPE. THE CONTRACTOR SHALL PROVIDE DOCUMENTATION FOR MATERIAL SPECIFICATION TO ENGINEER. MATERIAL SHALL BE INSTALLED AS REQUIRED IN ASTM D2321, LATEST EDITION.

6. MINIMUM COVER: MINIMUM COVER, H, IN NON-TRAFFIC APPLICATIONS (GRASS OR LANDSCAPE AREAS) IS 12" FROM THE TOP OF PIPE TO GROUND SURFACE. ADDITIONAL COVER MAY BE REQUIRED TO PREVENT FLOATION. FOR TRAFFIC APPLICATIONS, MINIMUM COVER, H, IS 12" UP TO 48" DIAMETER PIPE AND 24" OF COVER FOR 54"-60" DIAMETER PIPE, MEASURED FROM TOP OF PIPE TO BOTTOM OF FLEXIBLE PAVEMENT OR TO TOP OF RIGID PAVEMENT.

RECOMMENDED MINIMUM TRENCH WIDTHS

PIPE DIAM.	MIN. TRENCH WIDTH
4"	21"
6"	23"
8"	26"
10"	28"
12"	30"
15"	34"
18"	39"
24"	48"
30"	56"
36"	64"
42"	72"
48"	80"
54"	88"
60"	96"

MINIMUM RECOMMENDED COVER BASED ON VECHICLE LOADING CONDITIONS

PIPE DIAM.	SURFACE LIVE LOADING CONDITION	
	H-25	HEAVY CONSTRUCTION (75T AXLE LOAD) *
12" - 48"	12"	48"
54" - 60"	24"	60"

* VEHICLES IN EXCESS OF 75T MAY REQUIRE ADDITIONAL COVER

7. INSULATION: RIGID INSULATION SHALL BE PROVIDED FOR PIPES WITH LESS THAN 4' OF COVER IN ACCORDANCE WITH THE FOLLOWING TABLE:

COVER OVER PIPE	INSULATION THICKNESS
12" - 24"	3"
24" - 36"	2"
36" - 48"	1"
48"+	NONE

TYPICAL TRENCH DETAIL

NOT TO SCALE

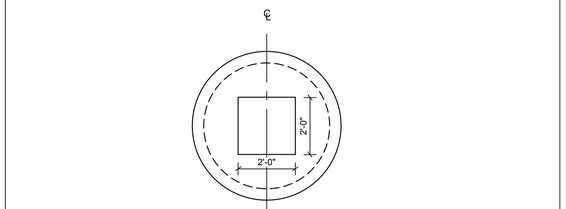

DESIGN NOTES:

1. ALL CONCRETE TO HAVE A MIN. OF 4,000 PSI COMPRESSIVE STRENGTH AT 28 DAYS.
2. DESIGN LOAD FOR H-20 WHEEL LOAD.
3. CATCH BASIN TO CONFORM TO ASTM-C478 SPECIFICATIONS.
4. REINFORCE TO 0.12 IN SQ./LF..

NOTE:
CASCADE GRATES SHALL BE INSTALLED ON GRADIENT OF GUTTER IF PROFILE GRADE EXCEEDS 5% GRATES SHALL BE DEPRESSED 2" BELOW NORMAL GUTTER GRADE UNLESS THIS DEPRESSION ITERFERES WITH TRAFFIC. PARALLEL BAR GRATES SHALL BE INSTALLED ON A LEVEL GRADIENT.

TYPICAL CATCH BASIN

NOT TO SCALE

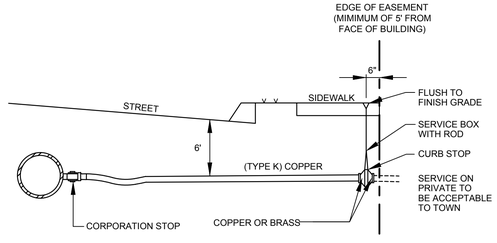

TYPICAL WATER SERVICE CONNECTION

NOT TO SCALE

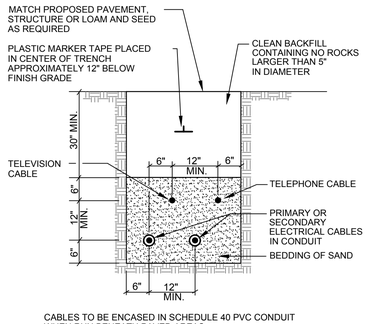

CABLES TO BE ENCASED IN SCHEDULE 40 PVC CONDUIT WHEN RUN BENEATH PAVED AREAS.

TYPICAL UNDERGROUND CABLE INSTALLATION

NOT TO SCALE

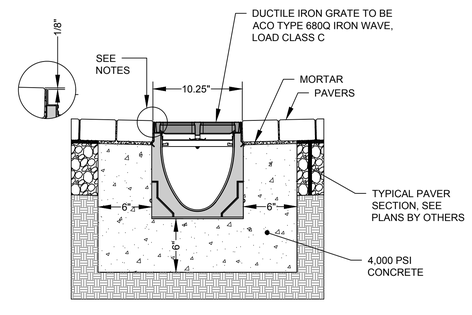

GENERAL NOTES:

1. THE SURFACE DRAINAGE SYSTEM SHALL BE POLYMER CONCRETE K200 CHANNEL SYSTEM WITH GALVANIZED STEEL EDGE RAILS AS MANUFACTURED BY ACO POLYMER PRODUCTS, INC.
2. SYSTEM SHALL BE MINIMUM LOAD CLASS B
3. THE SYSTEM SHALL BE 8" (200mm) NOMINAL INTERNAL WIDTH WITH A 10.2" (260mm) OVERALL WIDTH AND A BUILT-IN SLOPE OF 0.5%. CHANNEL INVERT SHALL HAVE DEVELOPED "V" SHAPE. ALL CHANNELS SHALL BE INTERLOCKING WITH A MALE/FEMALE JOINT.
4. CHANNEL SHALL WITHSTAND LOADING TO PROPER LOAD CLASS AS OUTLINED BY EN 1433. GRATE TYPE SHALL BE APPROPRIATE TO MEET THE SYSTEM LOAD CLASS SPECIFIED AND INTENDED APPLICATION. GRATES SHALL BE SECURED USING 'QUICKLOK' BOLTLESS LOCKING SYSTEM. CHANNEL AND GRATE SHALL BE CERTIFIED TO MEET THE SPECIFIED EN 1433 LOAD CLASS. THE SYSTEM SHALL BE INSTALLED IN ACCORDANCE WITH THE MANUFACTURER'S INSTRUCTIONS AND RECOMMENDATIONS.
5. CHANNEL SHALL TERMINATE AT THE DOWNSTREAM END IN AN IN-LINE CATCH BASIN, ACO TYPE 902G.

INSTALLATION NOTES:

1. MINIMUM CONCRETE STRENGTH OF 4,000 PSI. VIBRATE CONCRETE TO ELIMINATE AIR POCKETS.
2. EXPANSION AND CONTRACTION CONTROL JOINTS AND REINFORCEMENT ARE RECOMMENDED TO PROTECT CHANNEL AND CONCRETE SURROUND.
3. THE FINISHED LEVEL OF THE PAVER SURROUND MUST BE 1/8" ABOVE THE TOP OF THE CHANNEL EDGE.
4. CONCRETE BASE THICKNESS SHOULD MATCH SLAB THICKNESS.
5. REFER TO ACO'S LATEST INSTALLATION INSTRUCTIONS FOR FURTHER DETAILS.

CHANNEL DRAIN DETAIL

NOT TO SCALE

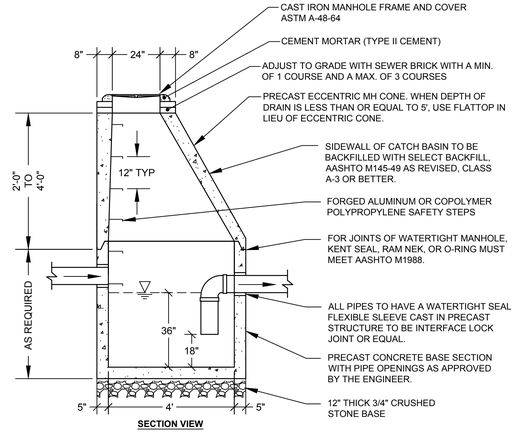

DESIGN NOTES:

1. ALL CONCRETE TO HAVE A MIN. OF 4,000 PSI COMPRESSIVE STRENGTH AT 28 DAYS.
2. DESIGN LOAD FOR H-20 WHEEL LOAD.
3. EXTERIOR OF STRUCTURE SHALL BE TREATED WITH 2 COATS OF APPROVED DAMP PROOF MATERIAL
4. ALL CONCRETE SECTIONS TO CONFORM TO ASTM-C478 SPECIFICATIONS.
5. REINFORCE TO 0.12 SQ IN / LF

OIL/WATER SEPARATOR

NOT TO SCALE

STATE OF MAINE
MICHAEL E. TADEMA-WIELANDT
LICENSED PROFESSIONAL ENGINEER

DATE: 12/5/2019
P.E.: MICHAEL E. TADEMA-WIELANDT

NO.	DATE	REVISIONS	APP'D BY
2	12/5/2019	REVISED PER STAFF REVIEW COMMENTS	MTW

TERRADYN CONSULTANTS, LLC
Civil Engineering | Land Planning | Stormwater Design | Environmental Permitting
41 CAMPUS DRIVE, SUITE 101, NEW GLOUCESTER, ME 04260
OFFICE: (207) 926-5111 FAX: (207) 221-1317
www.terradynconsultants.com
566 CONGRESS STREET, SUITE 205, PORTLAND, ME 04102

PERMIT DRAWING
NOT FOR CONSTRUCTION

PROJECT:
LONGFELLOW HOTEL
754 CONGRESS STREET
PORTLAND, ME 04101

SHEET TITLE:
UTILITY & DRAINAGE DETAILS

CLIENT:
CENTERWEST, LLC
795 CONGRESS STREET
PORTLAND, MAINE 04102

DATE:	9/13/2019
SCALE:	N.T.S.
DESIGNED:	ARF
JOB NO:	1923
FILE:	1923-D.DWG
SHEET	C-6.1

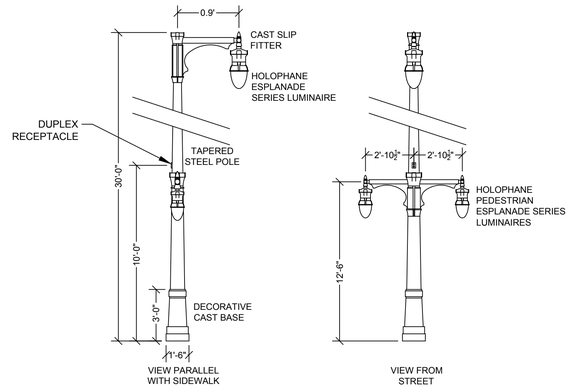

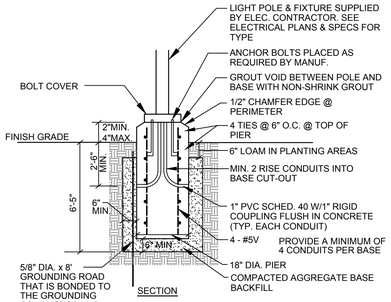

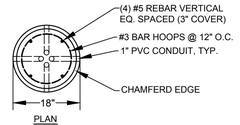

LUMINAIRE:
HOLOPHANE ESPLANADE LED II
LIGHTING MODEL ESL2-P20S-30K-AS-CMC-TG3-S-P7-NL2X2-BHDF13-200MC
CAST ALUMINUM HOUSING WITH STAINLESS STEEL HARDWARE. DROPPED REFRACTOR SHALL BE THERMAL RESISTANT BOROSILICATE GLASS. INTERNAL REFLECTOR AND PRISMATIC DIFFUSER SHALL PROVIDE AND IES TYPE IV DISTRIBUTION PATTERN. LUMINAIRE SHALL INCLUDE AND INTEGRAL BALAST WITH MODULAR WIRING CONNECTORS AND MULTI-VOLTAGE TAPS. PROVIDE AN INTERNAL RECEPTACLE TYPE PHOTOCELL CONTROL. LED 3000K COLOR TEMPERATURE. LUMINARE SHALL BE FURNISHED AND INSTALLED BY THE CENTRAL MAINE POWER COMPANY UNDER THE MUNICIPAL LEASE AGREEMENT FOR STREET LIGHTING.

BRACKET ARM:
HOLOPHANE PORTLAND SERIES (CUSTOM)
TOP BRACKET ARM: STEEL CROSSARM WITH A POST-TOP FITTING FOR A 3½" BY 8" TENON.
MODEL: PD42-CA-RAL6012
LOWER BRACKET ARM: STEEL DUAL CROSSARM
MODEL: PD69-CA-RAL6012

SLIP FITTER:
HOLOPHANE MODEL: WLLF200S-CA-RAL6012
2 ⅜" O.D. WITH SWIVEL CAST FITTER

LIGHTING POLE:
HOLOPHANE MODEL: PM-18-CSB-CA-RAL6012
TAPERED STEEL POLE SHAFT RATED FOR A 90MPH WIND LOAD WITH A 1.3 GUST FACTOR. PROVIDE FOUR HOT-DIPPED GALVANIZED STEEL L-TYPE ANCHOR BOLTS. LIGHTING POLE SHALL BE HOT DIP GALVANIZED PRIOR TO POWDER COAT PAINT.

DECORATIVE POLE BASE:
HOLOPHANE MODEL: PM18CSB-CA-RAL6012
DECORATIVE CLAMSHELL CAST ALUMINUM BASE. HARDWARE SHALL BE STAINLESS STEEL.

FINISH:
DARK GREEN: RAL-6012 (CUSTOM)

NOTES:
1. CONCRETE f'c=5,000 PSI @ 28 DAYS.
2. REINF. STEEL GRADE 60 NEW BARS.
3. CONCRETE 3/4" AGG., 6 +/- 1% ENTRAINED AIR.
4. PROVIDE 2 COATS BITUMINOUS DAMPROOFING FOR ALL CONCRETE BELOW GRADE.
5. EXPOSED CONCRETE TO BE PAINTED WITH 2 COATS OF ACRYLIC PAINT. COLOR TO MATCH POLE COLOR.
6. INSTALL BASE 3'-0" ABOVE FINISH GRADE IN LOCATIONS WHERE POLES ARE IN PARKING LOT PAVEMENT.

PRECAST CONCRETE LIGHT POLE FOUNDATION

DOWNTOWN DISTRICT STREET & SIDEWALK COMBO LIGHT DETAIL
NOT TO SCALE

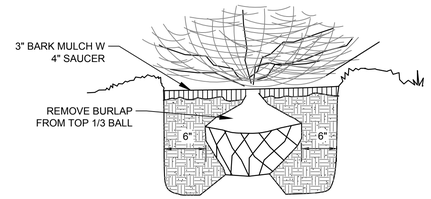

NOTE:
SHRUBS SHALL BEAR SAME RELATION TO GRADE AS PRIOR TO PLANTING.

SOIL MIX NOTES:
1. EVERGREEN: 4 PARTS TOPSOIL, 1 PART HUMUS
2. DECIDUOUS: 4 PARTS TOPSOIL, 1 PART MANURE

SHRUB PLANTING DETAIL
NOT TO SCALE

NOTES:
TREE SHALL BEAR SAME RELATION TO GRADE AS PRIOR TO PLANTING. NEVER CUT A LEADER, THIN BRANCHES & FOLIAGE BY 1/3 RETAINING NORMAL TREE SHAPE

NOTE 'A':
FOR ALL TREES UP TO 2 1/2" CAL. USE 2"x2" OR 2 1/2" STAKES W/ 2-#12 GA. GALV. WIRE ENCASED IN 2 PLY REINF. RUBBER HOSE. 1/2" INSIDE DIA.
GUY ALL TREES OVER 2 1/2" DIA. NOTE 'B'). GUY ALL EVERGREEN TREES.

TREE PLANTING DETAIL
NOT TO SCALE

STATE OF MAINE
MICHAEL E. TADEMA-WIELANDT
LICENSED PROFESSIONAL ENGINEER

DATE: 12/5/2019
P.E.: MICHAEL E. TADEMA-WIELANDT

NO.	DATE	REVISIONS	APP'D BY
2	12/5/2019	REVISED PER STAFF REVIEW COMMENTS	MTW

TERRADYN CONSULTANTS, LLC
41 CAMPUS DRIVE, SUITE 101, NEW GLOUCESTER, ME 04260
OFFICE: (207) 926-5111 FAX: (207) 221-1317
www.terradynconsultants.com
565 CONGRESS STREET, SUITE 201, PORTLAND, ME 04102
Civil Engineering | Land Planning | Stormwater Design | Environmental Permitting

PERMIT DRAWING
NOT FOR CONSTRUCTION

PROJECT:
LONGFELLOW HOTEL
754 CONGRESS STREET
PORTLAND, ME 04101

SHEET TITLE:
PLANTING & SITE LIGHTING DETAILS

CLIENT:
CENTERWEST, LLC
795 CONGRESS STREET
PORTLAND, MAINE 04102

DATE:	9/13/2019
SCALE:	N.T.S.
DESIGNED:	ARF
JOB NO:	1923
FILE:	1923-D.DWG

SHEET
C-6.3

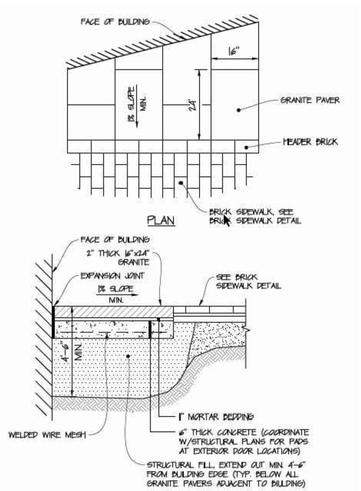

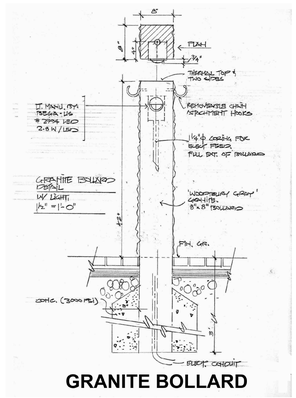

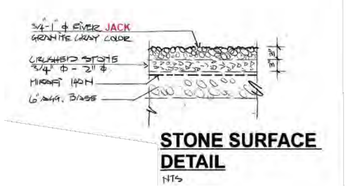

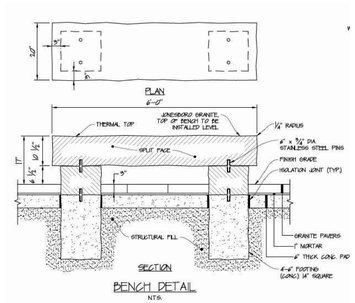

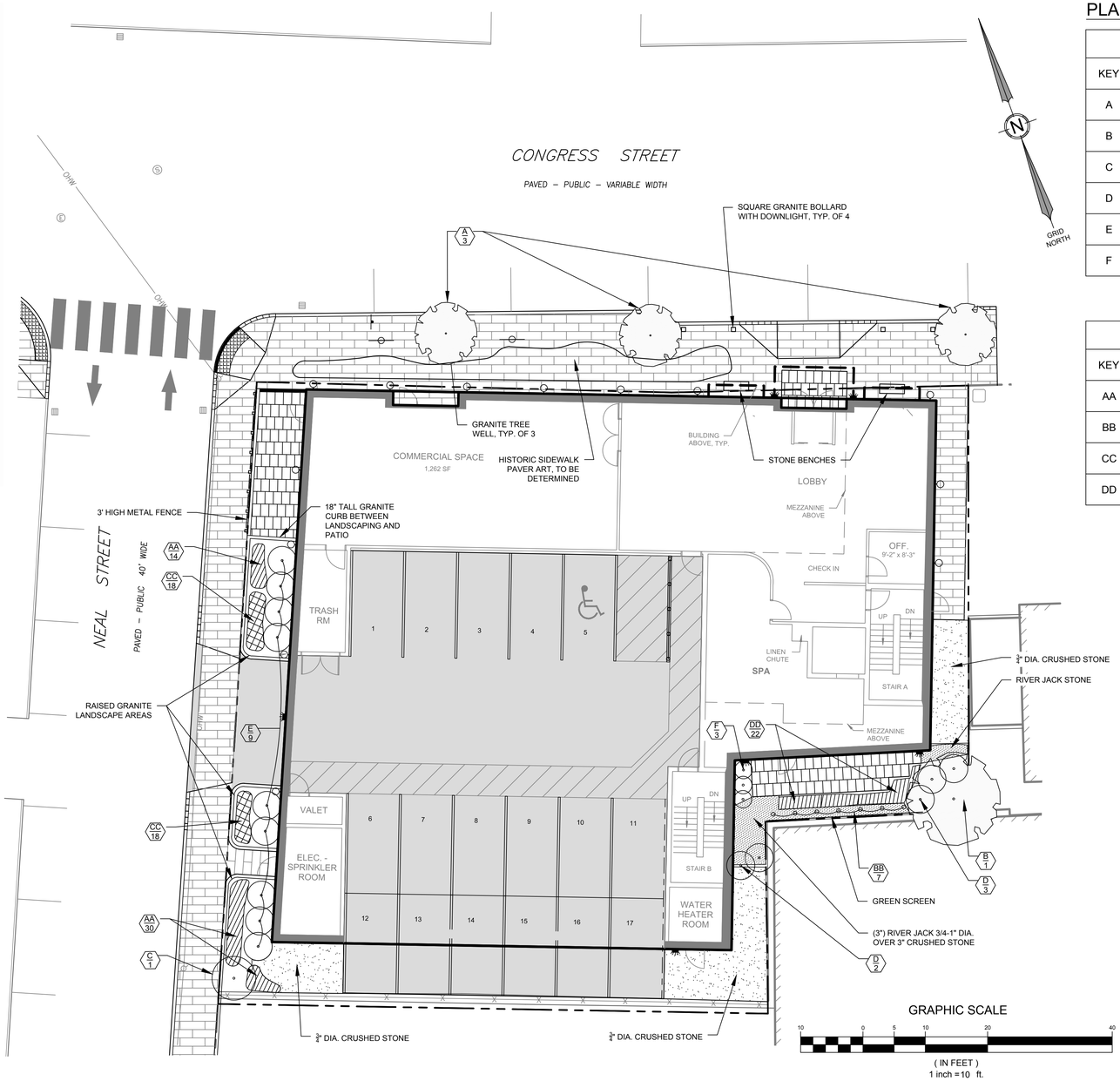

PLANT LIST:

TREES & SHRUBS

KEY	COMMON & BOTANICAL NAME	SIZE	ROOT	QTY	NOTES
A	STREETKEEPER HONEYLOCUST G. TRIACANTHOS Var. 'inermis' 'Streetkeeper'	2 ½" dia.	B&B	3	8' CLEARCANOPY UNDERSTORY
B	THREE FLOWER MAPLE ACER TRIFLORUM	2 ½" dia.	B&B	1	
C	KOUSA DOGWOOD C. KOUSA	2" dia.	B&B	1	
D	SHASTA VIBURNUM 'Summer snowflake' V. PLICATUM Var. 'Tomentosum 'Summer Snowflake'	#5	Cont.	5	
E	SHASTA VIBURNUM V. PLICATUM Var. 'Tomentosum' 'Shasta'	#5	B&B	9	
F	SWEET PEPPERBUSH CLETHRA ALNIFOLA 'Compacta'	#5	Cont.	3	

PERENNIALS

KEY	COMMON & BOTANICAL NAME	SIZE	ROOT	QTY	NOTES
AA	SWITCH GRASS PANICUM VIRGATIUM 'Cape Breeze'			44	@12" o.c.
BB	CLIMBING HYDRANGEA ANOMALA PETIOLARIS	#5	Cont.	7	@3' o.c.
CC	ASTILBE ASTILBE 'Chinese Pumila'			36	@12" o.c.
DD	MALE FERN FILIX-MAS			22	@12" o.c.

REGISTERED LANDSCAPE ARCHITECT
ANTHONY J. MUENCH
No. 7
State of Maine

DATE: 9/16/2019
PLA: ANTHONY MUENCH

NO.	DATE	REVISIONS	APP'D BY

TERRADYN CONSULTANTS, LLC
Civil Engineering | Land Planning | Stormwater Design | Environmental Permitting
41 CAMPUS DRIVE, SUITE 101, NEW GLOUCESTER, ME 04260
OFFICE: (207) 926-5111 FAX: (207) 221-1317
www.terradynconsultants.com
565 CONGRESS STREET, SUITE 201, PORTLAND, ME 04102

PERMIT DRAWING
NOT FOR CONSTRUCTION

PROJECT:
LONGFELLOW HOTEL
754 CONGRESS STREET
PORTLAND, ME 04101

SHEET TITLE:
LANDSCAPE PLAN

CLIENT:
CENTERWEST, LLC
795 CONGRESS STREET
PORTLAND, MAINE 04102

DATE:	9/13/2019
SCALE:	1"=10'
DESIGNED:	ARF
JOB NO:	1923
FILE: 1923 B.DWG	
SHEET	L-1

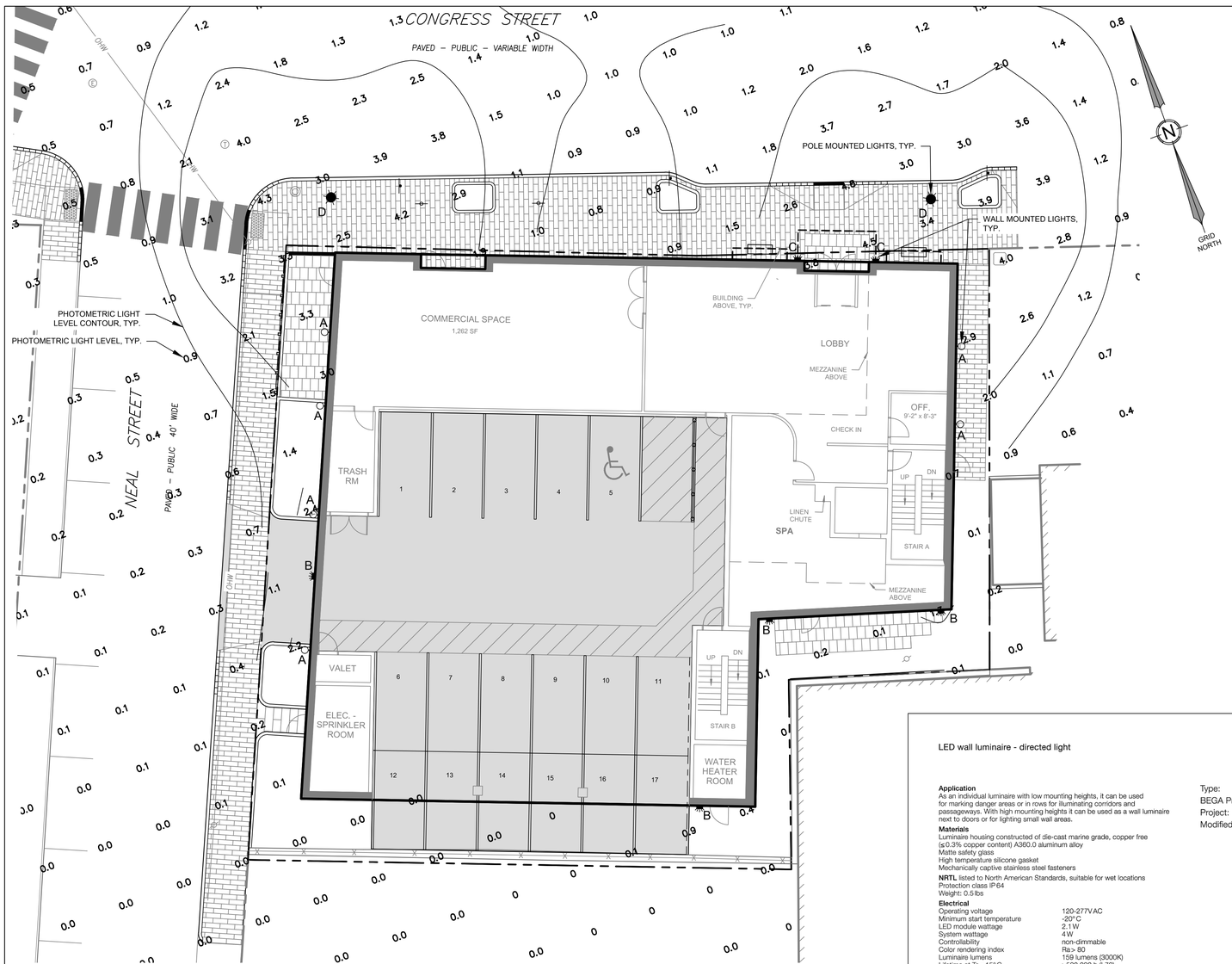

GRAPHIC SCALE

10 0 5 10 20 40

(IN FEET)
1 inch = 10 ft.

LIGHT FIXTURE TABLE

LABEL	LIGHT FIXTURE	MANUFACTURER	MANUFACTURERS ID	NUMBER OF LIGHTS	MOUNTING HEIGHT	MOUNTING LOCATION
A	ASH 12 WALL SCONCE	TECH LIGHTING	700OWASHL93012CHUNV	6	10'	WALL
B	BEGA LED WALL LUMINAIRE	BEGA	33514	4	10'	WALL
C	ASPEN 26 WALL SCONCE	TECH LIGHTING	700OWASPW93026DHUNVS	2	10'	WALL
D	DOWNTOWN COMBO, CITY OF PORTLAND FIGURE X-5F	HOLOPHANE	ESL2-P2S-30K-TG-4	2	30' w/ 12.5' PEDESTRIAN	POLE

NOTES:
1. LIGHTING PLAN PREPARED USING DESIGN MASTER PHOTOMETRICS SOFTWARE
2. ONLY PROPOSED LIGHTING FIXTURES ARE MODELED
3. DEPRECIATION FACTOR FOR LED IS 0.90

ASH 12 WALL SCONCE

TECH LIGHTING

The Ash outdoor wall sconce is a modern take on the classic industrial-style light fixture. The Ash features a sleek metal shade and clear diffuser that creates a column of diffused light from under the shade. Ash wall sconces feature energy-efficient, fully dimmable integrated LED lamping. Available in four sizes (8", 10", 12", 16") and two finishes: Bronze and Charcoal.

Outstanding protection against the elements:
- Powder coat finishes
- Stainless Steel mounting hardware
- Impact-resistant, UV stabilized acrylic lensing
- IP-65 Rated

SPECIFICATIONS

DELIVERED LUMENS	619 or 1115 with clear cylinder 406 or 863 with clear lens
WATTS	8 or 18
VOLTAGE	Universal 120-277V, with integral transient 2.5kV surge protection (driver)
DIMMING	0-10, ELV
LIGHT DISTRIBUTION	Symmetric
MOUNTING OPTIONS	Wall
PERFORMANCE OPTIONS	Photocointrol / Surge Protector
CCT	2700K or 3000K
CRI	90+
COLOR BINNING	3 Step
BUG RATING	B0-U1-G0
DARK SKY	Compliant (Lensed version only)
WET LISTED	IP65
GENERAL LISTING	ETL
CALIFORNIA TITLE 24	Can be used to comply with CEC 2016 Title 24 Part 6 for outdoor use. Registration with CEC Appliance Database not required.
START TEMP	-30°C
FIELD SERVICEABLE LED	Yes
CONSTRUCTION	Aluminum
HARDWARE	Stainless Steel
FINISH	Powder Coat
LED LIFETIME	L70; 70,000 Hours
WARRANTY*	5 Years
WEIGHT	4 lbs.

* Visit techlighting.com for specific warranty limitations and details.



ASH 12
shown in bronze/clear cylinder



ASH 12
shown in charcoal/clear lens

ORDERING INFORMATION

700OWASH	CRI / CCT	LENGTH	LENS	FINISH	VOLTAGE	OPTIONS
	L927 LED I/O-OUTPUT 90 CRI, 2700K **H927** LED HI-OUTPUT 90 CRI, 2700K **L930** LED I/O-OUTPUT 90 CRI, 3000K **H930** LED HI-OUTPUT 90 CRI, 3000K	**12** 12"	**C** CLEAR CYLINDER **D** CLEAR LENS	**Z** BRONZE **H** CHARCOAL	**UNV** 120V-277V UNIVERSAL	NONE **PC** BUTTON PHOTOCONTROL **SP** SURGE PROTECTION **PCSP** BUTTON PHOTOCONTROL & SURGE PROTECTION

techlighting.com

LED wall luminaire - directed light

BEGA

Application
As an individual luminaire with low mounting heights, it can be used for marking danger areas or in rows for illuminating corridors and passageways. With high mounting heights it can be used as a wall luminaire next to doors or for lighting small wall areas.

Materials
Luminaire housing constructed of die-cast marine grade, copper free (≤0.3% copper content) A360.0 aluminum alloy
Matte safety glass
High temperature silicone gasket
Mechanically captive stainless steel fasteners

NRTL listed to North American Standards, suitable for wet locations
Protection class IP 64
Weight: 0.5 lbs

Electrical

Operating voltage	120-277V AC
Minimum start temperature	-20° C
LED module wattage	2.1 W
System wattage	4 W
Controllability	non-dimmable
Color rendering index	Ra > 80
Luminaire lumens	159 lumens (3000K)
Lifetime at Ta = 15° C	>500,000 h (L70)
Lifetime at Ta = 50° C	300,000 h (L70)

LED color temperature
☐ 4000K - Product number + **K4**
☐ 3500K - Product number + **K35**
☐ 3000K - Product number + **K3**
☐ 2700K - Product number + **K27**

BEGA can supply you with suitable LED replacement modules for up to 20 years after the purchase of LED luminaires - see website for details

Finish
All BEGA standard finishes are matte, textured polyester powder coat with minimum 3 mil thickness.
Available colors ☐ Black (BLK) ☐ White (WHT) ☐ RAL:
☐ Bronze (BRZ) ☐ Silver (SLV) ☐ CUS:

Type:
BEGA Product:
Project:
Modified:





LED wall luminaire - directed light						
		LED	A	B	C	Required wiring box
33513		2.1 W	2 ⅛	5 ½	2 ⅝	**19544**

BEGA 1000 BEGA Way, Carpinteria, CA 93013 (805) 684-0533 info@bega-us.com

Due to the dynamic nature of lighting products and the associated technologies, luminaire data on this sheet is subject to change at the discretion of BEGA North America. For the most current technical data, please refer to bega-us.com
© copyright BEGA 2018
Updated 03/28/19

ASPEN 26 WALL SCONCE

TECH LIGHTING

The Aspen outdoor wall sconce creates an elegant elongated column of beautifully diffused light. The Aspen is available in four sizes (8", 15", 26", 36") to meet architectural scale; ideal for way-finding and general outdoor illumination. The Aspen features energy-efficient, fully dimmable integrated LED lamping. Available in two finishes: Bronze and Charcoal.

High quality LM80-tested LEDs
for consistent long-life performance and color

Outstanding protection against the elements:
- Powder coat finishes
- Stainless Steel mounting hardware
- Impact-resistant, UV stabilized frosted acrylic lensing
- IP-65 Rated

SPECIFICATIONS

DELIVERED LUMENS	1060
WATTS	38
VOLTAGE	Universal 120-277V, with integral transient 2.5kV surge protection (driver)
DIMMING	0-10, ELV
LIGHT DISTRIBUTION	Symmetric
MOUNTING OPTIONS	Wall
PERFORMANCE OPTIONS	In-Line Fuse / Surge Protector
CCT	2700K, 3000K
CRI	90+
COLOR BINNING	3 Step
BUG RATING	B0-U3-G1
DARK SKY	Non-compliant
WET LISTED	IP65
GENERAL LISTING	ETL
CALIFORNIA TITLE 24	Can be used to comply with CEC 2016 Title 24 Part 6 for outdoor use. Registration with CEC Appliance Database not required.
START TEMP	-30°C
FIELD SERVICEABLE LED	Yes
CONSTRUCTION	Aluminum
HARDWARE	Stainless Steel
FINISH	Powder Coat
LED LIFETIME	L70; 70,000 Hours
WARRANTY*	5 Years
WEIGHT	7 lbs.

* Visit techlighting.com for specific warranty limitations and details.



ASPEN 26
shown in charcoal



ASPEN 26
shown in bronze

ORDERING INFORMATION

700OWASP	CRI / CCT	LENGTH	LENS	FINISH	VOLTAGE	DISTRIBUTION	OPTIONS
	927 90 CRI, 2700K **930** 90 CRI, 3000K	**26** 26"	**D** DIFFUSE	**Z** BRONZE **H** CHARCOAL	**UNV** 120V-277V UNIVERSAL	**S** SYMMETRIC	NONE **LF** IN-LINE FUSE **SP** SURGE PROTECTION **LFSP** IN-LINE FUSE & SURGE PROTECTION

techlighting.com

MICHAEL E. TADEMA-WIELANDT
STATE OF MAINE
LICENSED PROFESSIONAL ENGINEER

DATE: 12/5/2019
P.E.: MICHAEL E. TADEMA-WIELANDT

NO.	DATE	REVISIONS	APP'D BY
2	12-5-2019	REVISED PER STAFF REVIEW COMMENTS	MTW

TERRADYN CONSULTANTS, LLC
Civil Engineering | Land Planning | Stormwater Design | Environmental Permitting
41 CAMPUS DRIVE
SUITE #105
NEW GLOUCESTER, ME 04260
OFFICE: (207) 926-5111 FAX: (207) 221-1317
www.terradynconsultants.com
565 CONGRESS STREET
SUITE 201
PORTLAND, ME 04102

PERMIT DRAWING
NOT FOR CONSTRUCTION

PROJECT:
LONGFELLOW HOTEL
754 CONGRESS STREET
PORTLAND, ME 04101

SHEET TITLE:
PHOTOMETRIC LIGHTING PLAN

CLIENT:
CENTERWEST, LLC
795 CONGRESS STREET
PORTLAND, MAINE 04102

DATE:	9/13/2019
SCALE:	1"=10'
DESIGNED:	ARF
JOB NO:	1923
FILE:	1923 P.DWG
SHEET	P-1.0

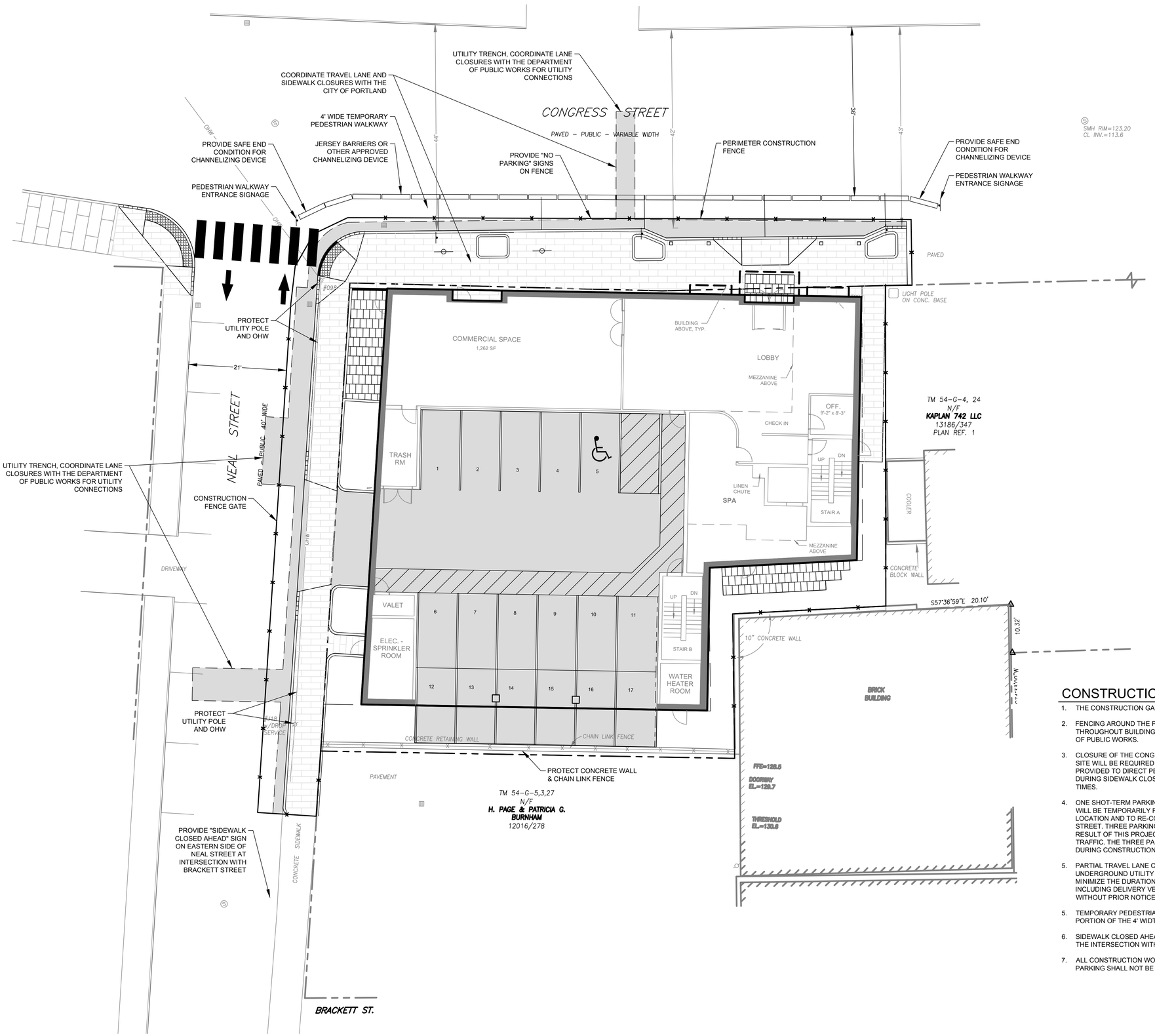

CONSTRUCTION MANAGEMENT NOTES:

1. THE CONSTRUCTION GATE SHALL SWING INTO THE PROJECT SITE
2. FENCING AROUND THE PERIMETER OF THE CONSTRUCTION WORK ZONE WILL BE MAINTAINED THROUGHOUT BUILDING CONSTRUCTION, UNLESS OTHERWISE APPROVED BY THE DEPARTMENT OF PUBLIC WORKS.
3. CLOSURE OF THE CONGRESS STREET AND NEAL STREET SIDEWALKS DIRECTLY IN FRONT OF THE SITE WILL BE REQUIRED FOR THE DURATION OF BUILDING CONSTRUCTION. SIGNAGE SHALL BE PROVIDED TO DIRECT PEDESTRIANS ACROSS THE STREET AT EXISTING CROSSWALK LOCATIONS DURING SIDEWALK CLOSURES, AS SHOWN. ADA ACCESSIBILITY SHALL BE MAINTAINED AT ALL TIMES.
4. ONE SHOT-TERM PARKING SPACE ALONG CONGRESS STREET DIRECTLY IN FRONT OF THE SITE WILL BE TEMPORARILY REMOVED DURING CONSTRUCTION TO PROVIDE A TEMPORARY SIDEWALK LOCATION AND TO RE-CONSTRUCT THE SIDEWALK AND PARKING SPACES ALONG CONGRESS STREET. THREE PARKING SPACES ALONG NEAL STREET WILL BE PERMANENTLY REMOVED AS A RESULT OF THIS PROJECT TO CONVERT A PORTION OF NEAL STREET FROM ONE-WAY TO TWO-WAY TRAFFIC. THE THREE PARKING SPACES TO BE PERMANENTLY REMOVED WILL ALSO BE REMOVED DURING CONSTRUCTION.
5. PARTIAL TRAVEL LANE CLOSURES OF CONGRESS AND NEAL STREETS WILL BE NECESSARY DURING UNDERGROUND UTILITY INSTALLATION. THIS WORK SHALL BE SCHEDULED AND SEQUENCED TO MINIMIZE THE DURATION OF ANY STREET OCCUPANCY. AT NO TIME CAN CONSTRUCTION ACTIVITY INCLUDING DELIVERY VEHICLES CLOSE OR BLOCK STREETS OR AFFECT PUBLIC SAFETY ACCESS WITHOUT PRIOR NOTICE AND APPROVAL OF THE DEPARTMENT OF PUBLIC WORKS.
5. TEMPORARY PEDESTRIAN WALKWAYS SHALL BE PROVIDED WITH A FUNCTIONAL WIDTH OF 4'. NO PORTION OF THE 4' WIDTH MAY BE BLOCKED BY SIGNAGE OR BARRIERS.
6. SIDEWALK CLOSED AHEAD SIGNAGE TO BE LOCATED ON THE EASTERN SIDE OF NEAL STREET AT THE INTERSECTION WITH BRACKETT STREET.
7. ALL CONSTRUCTION WORKERS SHALL PARK IN OFF-STREET PARKING LOCATIONS. ON-STREET PARKING SHALL NOT BE PERMITTED.

GRAPHIC SCALE

10 0 5 10 20 40

(IN FEET)
1 inch = 10 ft.

STATE OF MAINE
MICHAEL E. TADEMA-WIELANDT
REGISTERED PROFESSIONAL ENGINEER

DATE: 9/13/2019
P.E.: MICHAEL E. TADEMA-WIELANDT

NO.	DATE	REVISIONS	APP'D BY

TERRADYN CONSULTANTS, LLC
Civil Engineering | Land Planning | Stormwater Design | Environmental Permitting
41 CAMPUS DRIVE, SUITE 101, NEW GLOUCESTER, ME 04260
OFFICE: (207) 926-5111 FAX: (207) 221-1317
www.terradynconsultants.com
505 CONGRESS STREET, SUITE 201, PORTLAND, ME 04102

PERMIT DRAWING
NOT FOR CONSTRUCTION

PROJECT:
LONGFELLOW HOTEL
754 CONGRESS STREET
PORTLAND, ME 04101

SHEET TITLE:
CONSTRUCTION MANAGEMENT PLAN

CLIENT:
CENTERWEST, LLC
795 CONGRESS STREET
PORTLAND, MAINE 04102

DATE:	9/13/2019
SCALE:	1"=10'
DESIGNED:	ARF
JOB NO:	1923
FILE: 1923 B.DWG	

SHEET C-2.1

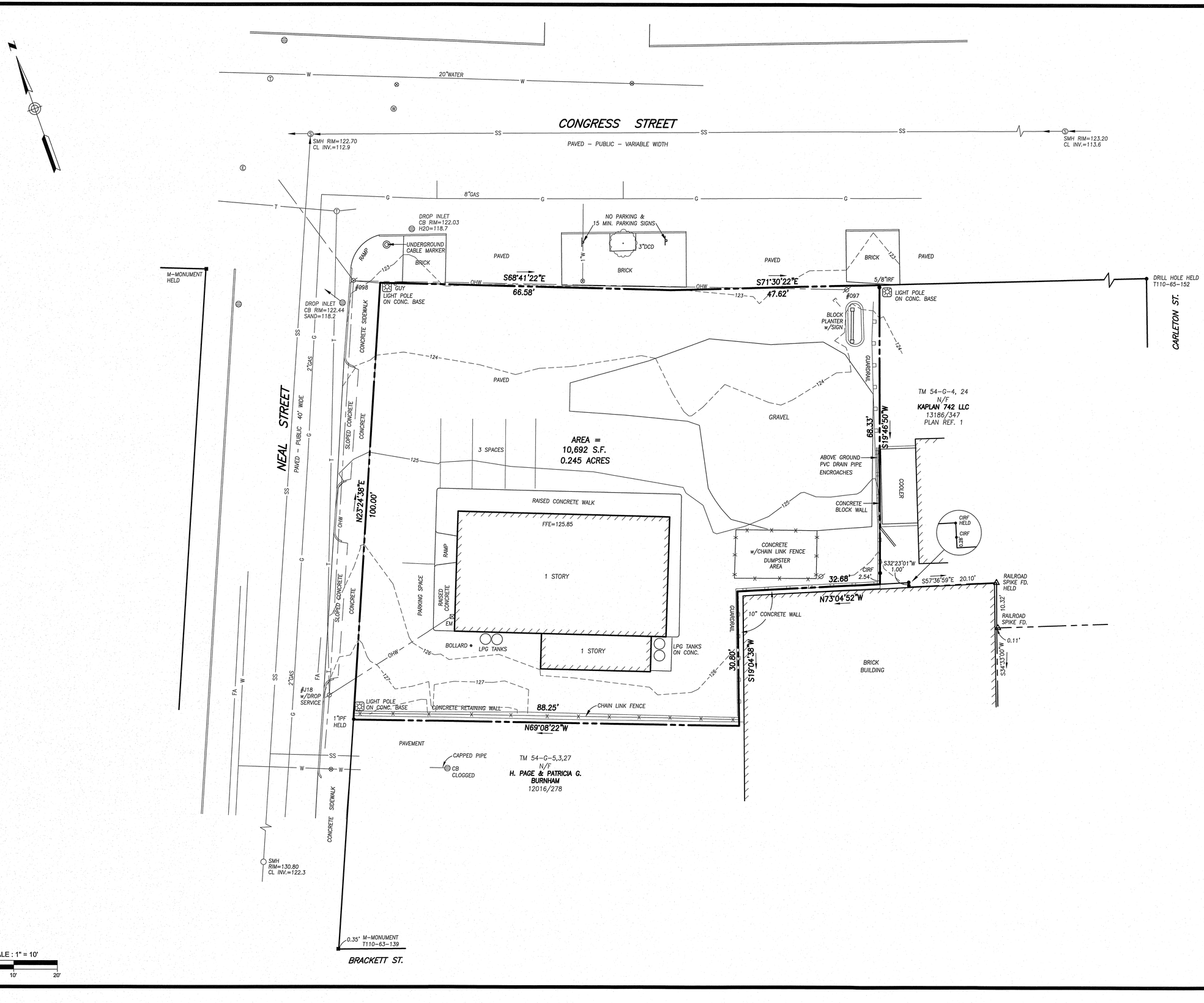

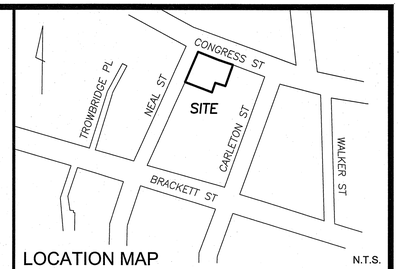

LOCATION MAP N.T.S.

LEGEND

IRON PIPE OR ROD FOUND	FENCE
MONUMENT FOUND	CURB
UTILITY POLE	OHW — OVERHEAD WIRES
MANHOLE	E — UNDERGROUND POWER
EM ELECTRIC METER	W — WATER LINE
SIGN	G — GAS LINE
CATCH BASIN	T — TELEPHONE
WATER VALVE OR SHUTOFF	SS — SANITARY SEWER
LIGHT POLE	100 — 1' CONTOUR
DECIDUOUS TREE	IPF/IRF IRON PIPE / ROD FOUND
	N/F NOW OR FORMERLY
	000/000 DEED BOOK / PAGE

PLAN REFERENCES

1. "STANDARD BOUNDARY SURVEY AT CONGRESS STREET & CARLETON STREET, PORTLAND, MAINE MADE FOR MICHAEL D. KAPLAN APRIL 6, 1995" REVISED 4/10/95 OWEN HASKELL, INC. JOB NO. 94256P RECORDED IN PLAN BOOK 195 PAGE 86.

2. "STANDARD BOUNDARY SURVEY CARLETON ST. & NEAL ST. PORTLAND, MAINE FOR: BURNHAM ENTERPRISES SURVEY BY: SURVEY INC. AUGUST 1995"

3. "STANDARD BOUNDARY SURVEY ON NEAL STREET, PORTLAND, MAINE FOR SYLVIA D. GREENBERG 12-7-95" REVISED 3-1-96 OWEN HASKELL, INC. JOB NO. 95218P.

4. "BOUNDARY & TOPOGRAPHIC SURVEY ON NEAL STREET, PORTLAND, MAINE MADE FOR MPB PROPERTIES SEPT. 16, 2005" OWEN HASKELL, INC.

GENERAL NOTES

1. OWNER OF RECORD: S & A 786 HOLDING LLC
754 CONGRESS STREET, PORTLAND, ME
TAX MAP 54 BLOCK G LOT 1, 2, 3
C.C.R.D. BOOK 29094 PAGE 171

2. BEARINGS ARE BASED ON CITY GRID AS PER TWO CITY CONTROL MONUMENTS SHOWN.

3. ELEVATIONS ARE ON CITY DATUM FROM MONUMENT AT NORTHEAST CORNER CUMBERLAND AVENUE AND MELLEN STREET, ELEVATION 74.46' FROM CITY BOOK L836/48.

UTILITY NOTE

THE UNDERGROUND UTILITIES SHOWN HAVE BEEN LOCATED FROM FIELD SURVEY INFORMATION AND EXISTING DRAWINGS. THE SURVEYOR MAKES NO GUARANTEES THAT THE UNDERGROUND UTILITIES SHOWN COMPRISE ALL SUCH UTILITIES IN THE AREA, EITHER IN SERVICE OR ABANDONED. THE SURVEYOR FURTHER DOES NOT WARRANT THAT THE UNDERGROUND UTILITIES SHOWN ARE IN THE EXACT LOCATION INDICATED ALTHOUGH HE DOES CERTIFY THAT THEY ARE LOCATED AS ACCURATELY AS POSSIBLE FROM INFORMATION AVAILABLE. THE SURVEYOR HAS NOT PHYSICALLY LOCATED THE UNDERGROUND UTILITIES. CALL 1-888-DIGSAFE AT LEAST THREE BUSINESS DAYS BEFORE PERFORMING ANY CONSTRUCTION. DUE TO OSHA CONFINED SPACE REQUIREMENTS, ALL INVERTS AND PIPE SIZES MUST BE VERIFIED PRIOR TO ANY CONSTRUCTION.

CERTIFICATE

OWEN HASKELL, INC. HEREBY CERTIFIES THAT THIS PLAN IS BASED ON, AND THE RESULT OF, AN ON THE GROUND FIELD SURVEY AND THAT TO THE BEST OF OUR KNOWLEDGE, INFORMATION AND BELIEF, IT CONFORMS TO THE BOARD OF LICENSURE FOR PROFESSIONAL LAND SURVEYORS CURRENT STANDARDS OF PRACTICE.

JOHN C. SCHWANDA, PLS #1252

6-19-2019
DATE

STATE OF MAINE
JOHN C. SCHWANDA
1252
PROFESSIONAL LAND SURVEYOR

Boundary & Topographic Survey
At
754 Congress Street, Portland, Maine
Made for
Nate DeLois
795 Congress Street, Portland, Maine

OWEN HASKELL, INC.
PROFESSIONAL LAND SURVEYORS
390 US ROUTE 1, UNIT 10, FALMOUTH, ME 04105 TEL. 207-774-0424

DRAWN BY: JCS / JLW	DATE: JUNE 19, 2019	JOB NO. 2019-123P	
CHECKED BY: JCS	SCALE: 1" = 10'	DRWG. NO. 1	



1 Site Plan
1" = 40'-0"

A0.01	Date: SEP 12, 2019	Scale: 1" = 40'-0"	Revisions:	Project: 754 CONGRESS	Architect: ARCHETYPE ARCHITECTS	Consultant:	Prepared For: Owner	
	AREA VIEW			754 Congress Street Portland, Maine	48 Union Wharf Portland, Maine 04101 (207) 772-6022 Fax (207) 772-4056			

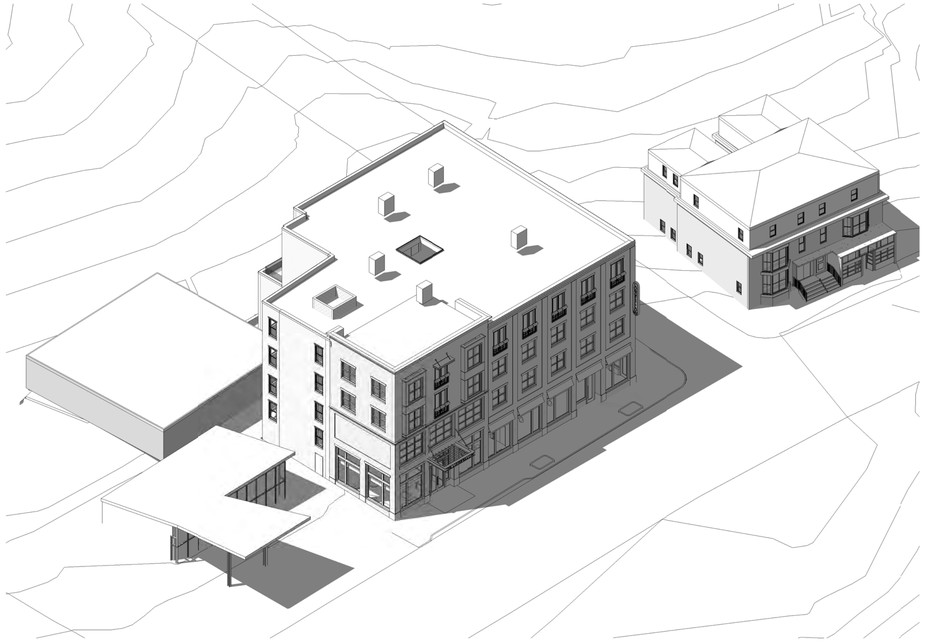

1 | Axon - Carleto Congress



2 | Axon - Neal Congress

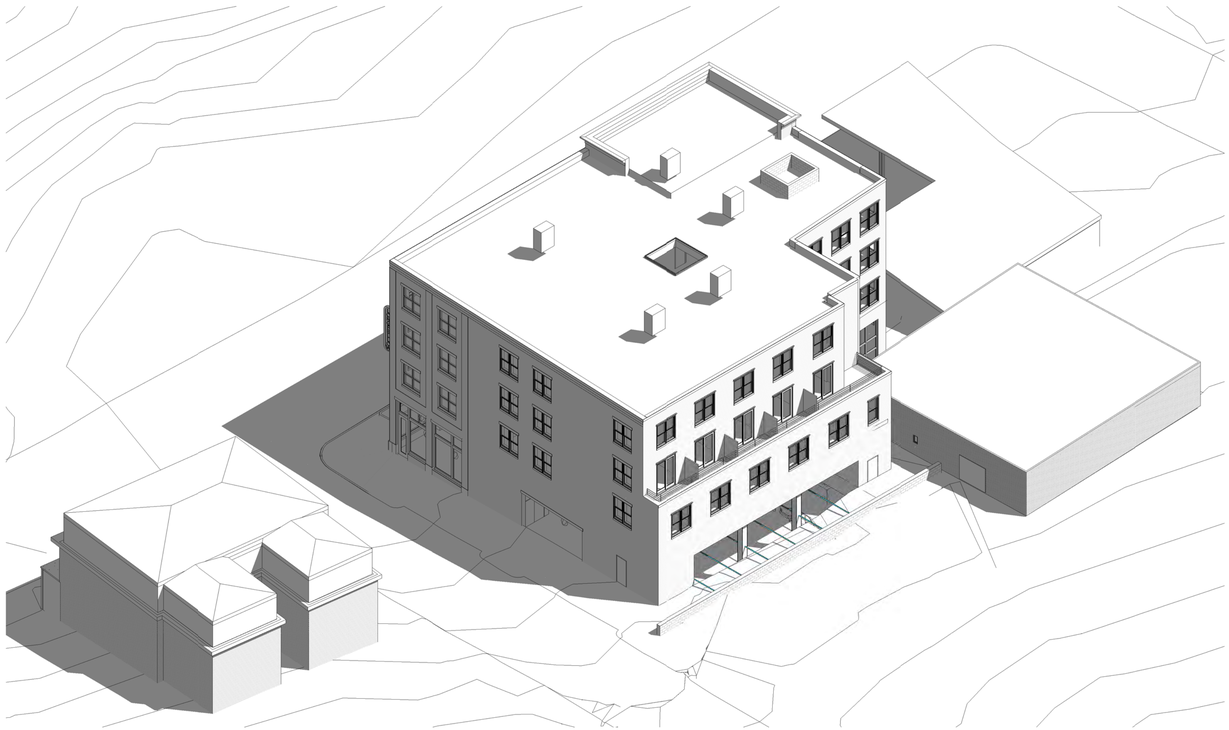

3 | Axon - Neal St



4 | Axon - Carleto St

Prepared For:
Owner

Consultant:

Architect:
ARCHETYPE ARCHITECTS
48 Union Wharf Portland, Maine 04101
(207) 772-6022 Fax (207) 772-4056

Project:
754 CONGRESS
754 Congress Street
Portland, Maine

Revisions:

Scale:

Date:
SEP 12, 2019

3D Axon Views

A0.02

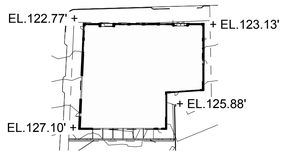

GENERAL NOTES:

1. AVERAGE GRADE BY DEFINITION: GRADE TAKEN AT THE FOUR (4) BUILDING CORNERS DIVIDED BY FOUR (4) - 122.77' + 123.13' + 125.88' + 127.1'= 498.88' /4 = 124.72'

2. BUILDING HEIGHT: THE VERTICAL MEASUREMENT FROM AVERAGE GRADE TO HIGHEST POINT OF THE ROOF BEAMS = 50' - 0"



5 | NORTH ELEVATION - CONGRESS ST.
1/8" = 1'-0"



2 | WEST ELEVATION - NEAL ST.
1/8" = 1'-0"



4 | SOUTH ELEVATION
1/8" = 1'-0"



3 | SOUTH ELEVATION 2
1/8" = 1'-0"



1 | EAST ELEVATION
1/8" = 1'-0"

Prepared For: Owner

Consultant:

Architect:
ARCHETYPE ARCHITECTS
48 Union Wharf Portland, Maine 04101
(207) 772-6022 Fax (207) 772-4056

Project:
754 CONGRESS
754 Congress Street Portland, Maine

Revisions:

Scale: As indicated

Date: SEP 12, 2019

BUILDING ELEVATIONS

A2.01

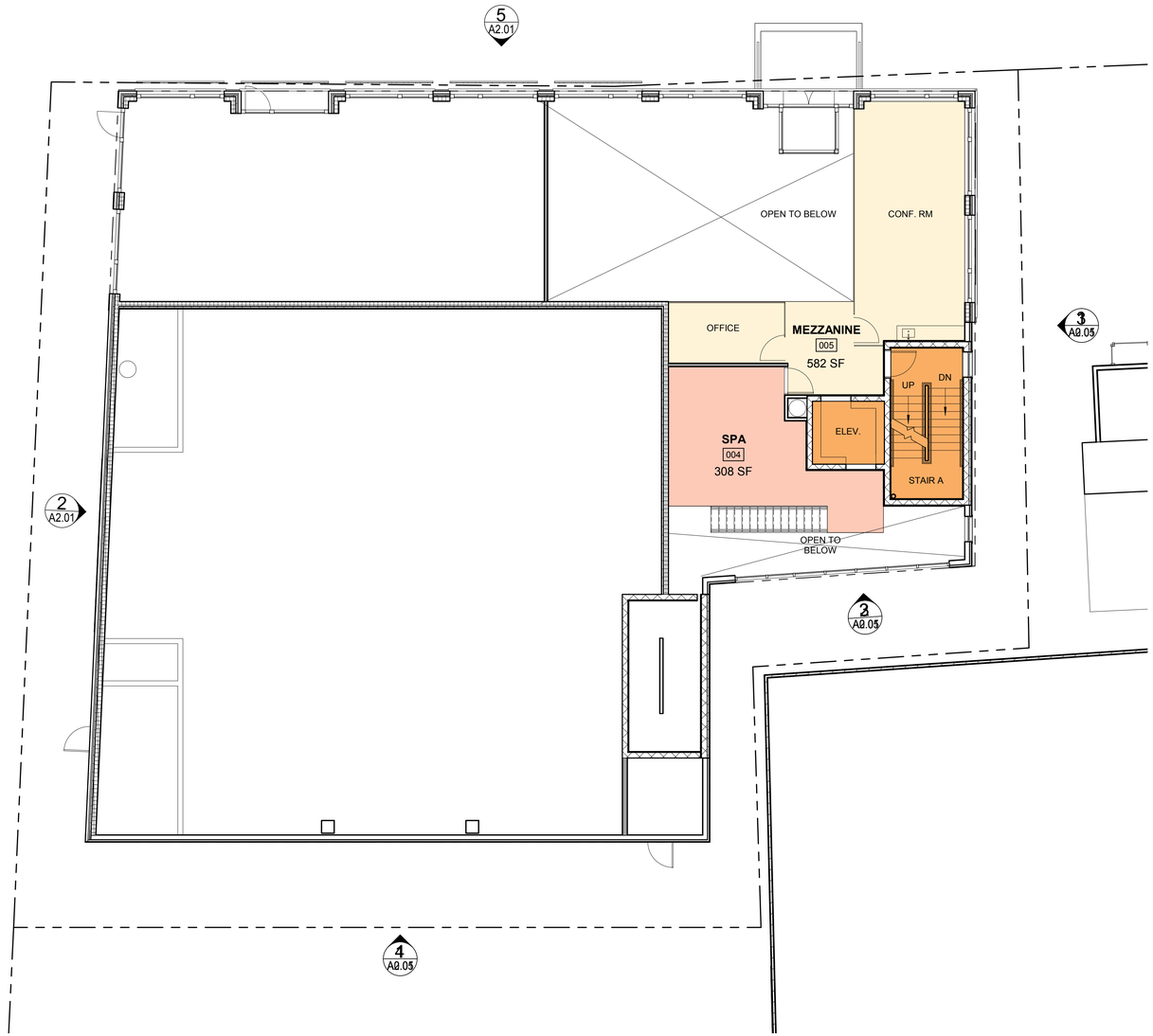

1 MEZZANINE
1/8" = 1'-0"

0 2'-0" 4'-0" 8'-0" 16'-0"

Prepared For: Owner

Consultant:

Architect: ARCHETYPE ARCHITECTS
48 Union Wharf Portland, Maine 04101
(207) 772-6022 Fax (207) 772-4056

Project: 754 CONGRESS
754 Congress Street
Portland, Maine

Revisions:

Scale: 1/8" = 1'-0"

Date: SEP 12, 2019

MEZZANINE

A1.01a

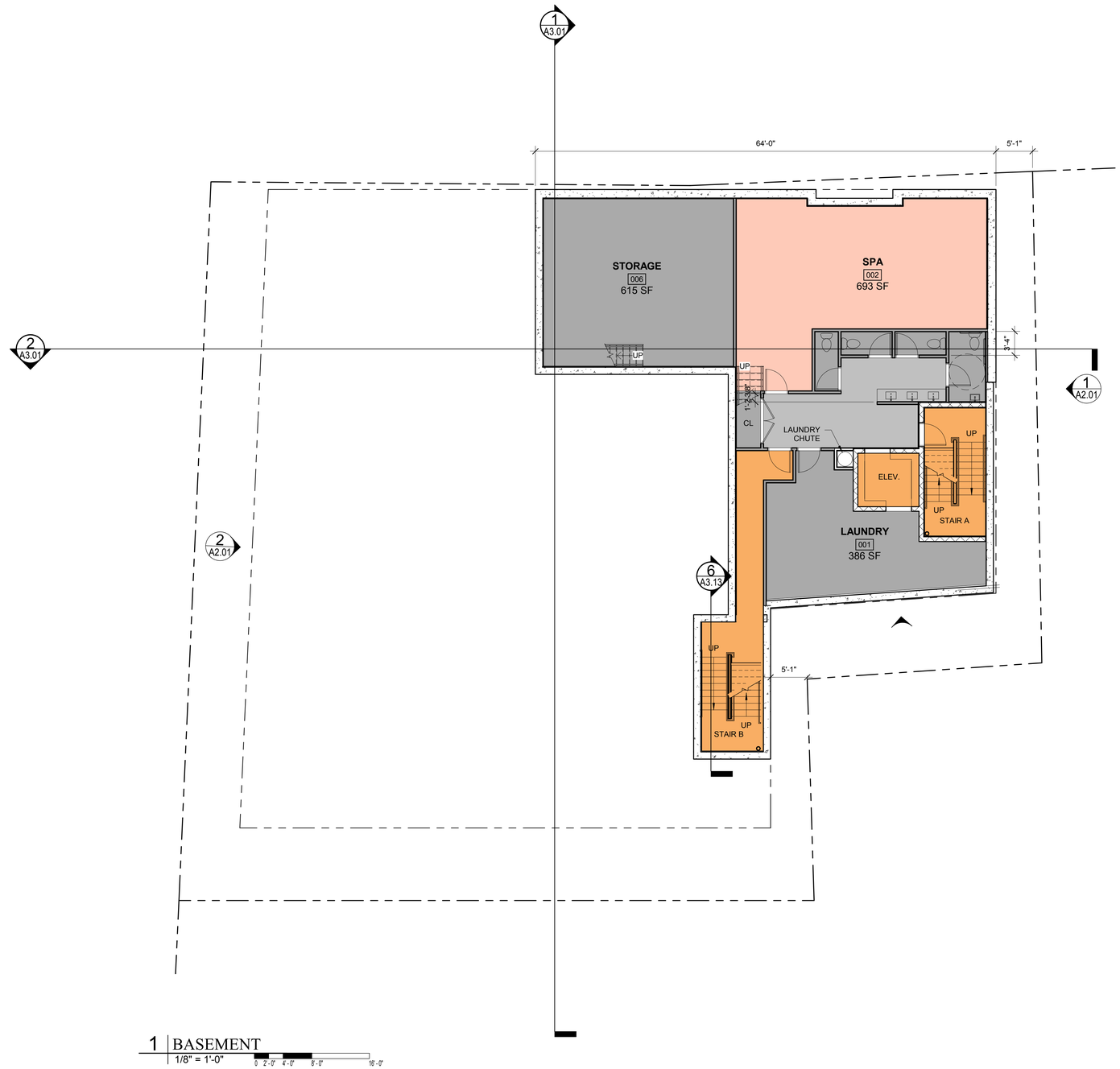

1 BASEMENT
1/8" = 1'-0"

0 2'-0" 4'-0" 8'-0" 16'-0"

Prepared For: Owner

Consultant:

Architect: ARCHETYPE ARCHITECTS
48 Union Wharf Portland, Maine 04101
(207) 772-6022 Fax (207) 772-4056

Project: 754 CONGRESS
754 Congress Street
Portland, Maine

Revisions:

Scale: 1/8" = 1'-0"

Date: SEP 12, 2019

BASEMENT PLAN

A1.00

AREA CALCULATIONS

BASEMENT:	3,037 GSF
1ST FL:	8,145 GSF
MEZZANINE:	1,305 GSF
2ND FL:	8,213 GSF
3RD FL:	7,803 GSF
4TH FL:	7,803 GSF +
	36,306 GSF (INCL. PARKING GARAGE)

CONGRESS STREET

NEAL STREET

B2b ZONE

R6 ZONE

COMMERCIAL SPACE
1,262 SF

LOBBY

OFF.
9'-2" x 8'-3"

CHECK IN

TRASH RM

VALET

ELEC. - SPRINKLER ROOM

WATER HEATER ROOM

LINEN CHUTE

SPA
416
617 SF

STAIR A

STAIR B

UP

DN

MEZZANINE ABOVE

BLADE SIGN ABOVE

BAY WINDOW ABOVE

CANOPY ABOVE

WALL SCONCE TECH LIGHTING ASH 12

WALL SCONCE TECH LIGHTING ASPEN 36

WALL LUMINAIRE BEGA #33513

EL. 123'-0"

8'-0"

2'-6"

1'-2"

9"

3'-10"

3'-5"

1"

5'-1"

10'-1"

754 CONGRESS STREET

ZONE = B2b
AREA = 10,692 SF
REAR YARD SETBACK MIN. = 10 FEET
SIDE YARD SETBACK = NONE
FRONT YARD MAX. = NO MORE THAN 10 FEET
STRUCTURE STEPBACKS = ABOVE 35 FEET - 5 FEET FROM SIDE PROPERTY LINE & 15 FEET FROM REAR PROPERTY LINE WHEN ABUTTING A RESIDENTIAL ZONE.
HEIGHT MAX. = 50 FEET IF FIRST FLOOR IS PARTIALLY OCCUPIED BY COMMERCIAL USE.
MAX. IMPERVIOUS SURFACE RATIO = 90%

1 | 1ST FLOOR
1/8" = 1'-0"
0 2'-0" 4'-0" 8'-0" 16'-0"

N

Prepared For: Owner

Consultant:

Architect: ARCHETYPE ARCHITECTS
48 Union Wharf Portland, Maine 04101
(207) 772-6022 Fax (207) 772-4056

Project: 754 CONGRESS
754 Congress Street
Portland, Maine

Revisions:

Scale: As indicated

Date: SEP 12, 2019

GROUND FLOOR PLAN

A1.01

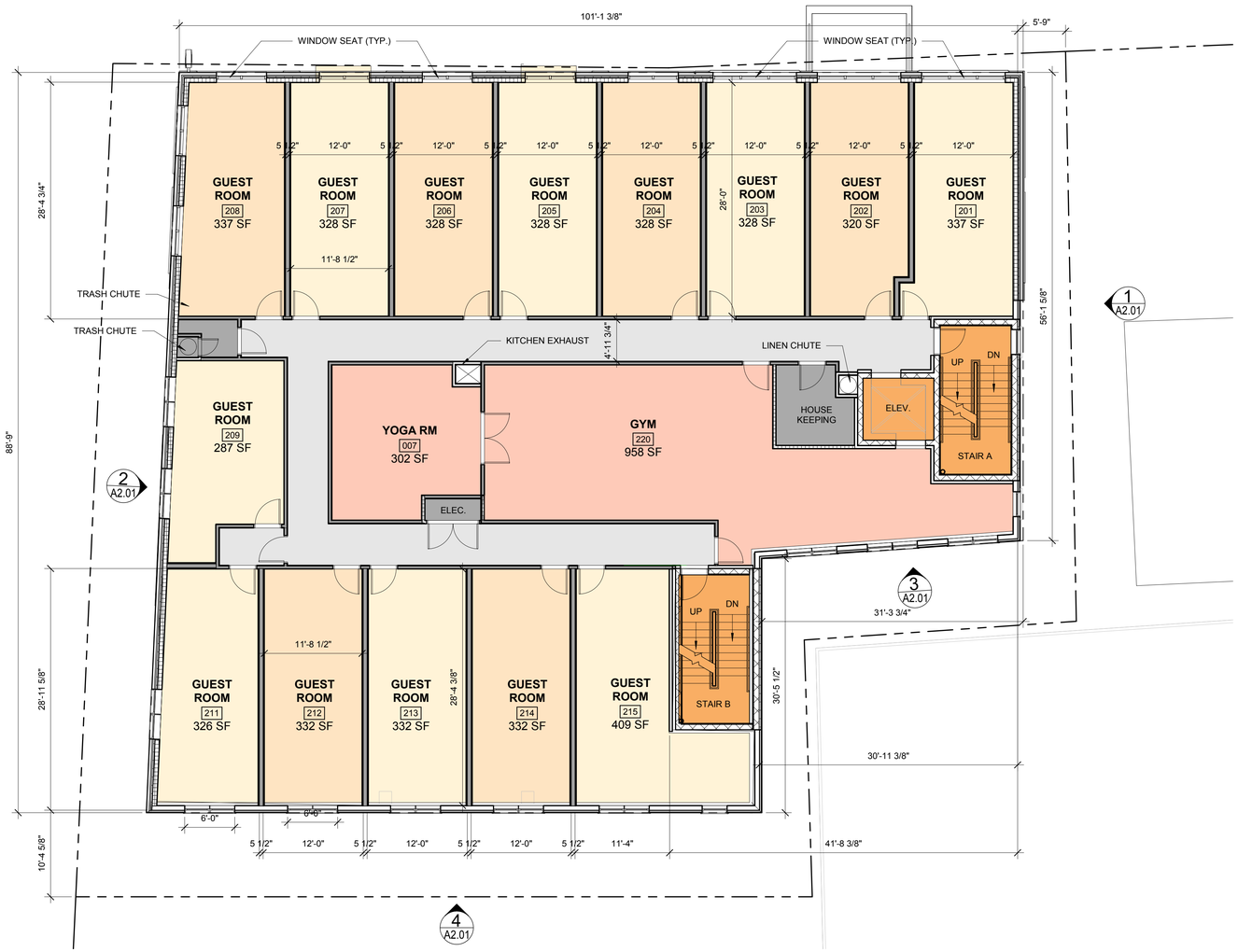

1 2ND FLOOR
1/8" = 1'-0"
0 2'-0" 4'-0" 8'-0" 16'-0"

Prepared For: Owner

Consultant:

Architect:
ARCHETYPE ARCHITECTS
48 Union Wharf Portland, Maine 04101
(207) 772-6022 Fax (207) 772-4056

Project:
754 CONGRESS
754 Congress Street
Portland, Maine

Revisions:

Scale: 1/8" = 1'-0"

Date: SEP 12, 2019

SECOND FLOOR PLAN

A1.02



1 | 3RD FLOOR
1/8" = 1'-0"
0 2'-0" 4'-0" 8'-0" 16'-0"
N

Prepared For: Owner

Consultant:

Architect: ARCHETYPE ARCHITECTS
48 Union Wharf Portland, Maine 04101
(207) 772-6022 Fax (207) 772-4056

Project: 754 CONGRESS
754 Congress Street
Portland, Maine

Revisions:

Scale: As indicated

Date: SEP 12, 2019

THIRD FLOOR PLAN

A1.03

1 4TH FLOOR
1/8" = 1'-0"
0 2'-0" 4'-0" 8'-0" 16'-0"
N

Prepared For: Owner

Consultant:

Architect: ARCHETYPE ARCHITECTS
48 Union Wharf Portland, Maine 04101
(207) 772-6022 Fax (207) 772-4056

Project: 754 CONGRESS
754 Congress Street
Portland, Maine

Revisions:

Scale: As indicated

Date: SEP 12, 2019

FOURTH FLOOR PLAN

A1.04

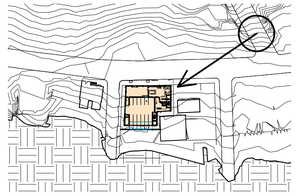

VIEW 2 CAMARA LOCATION



3 | 3D View 2

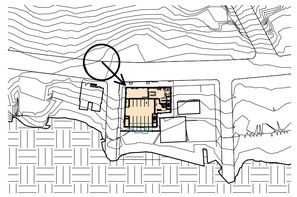

VIEW 1 CAMARA LOCATION



2 | 3D View 1

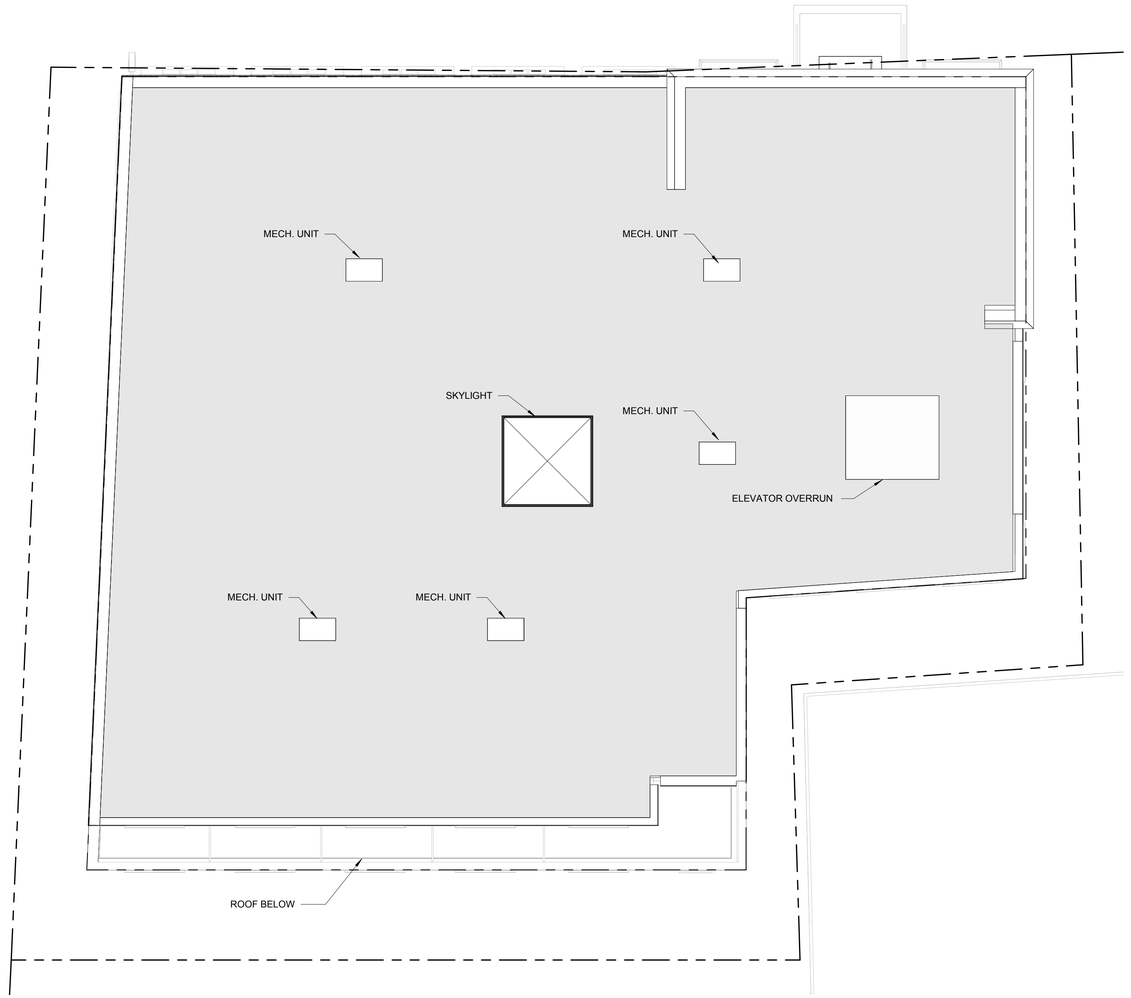

1 | ROOF
1/8" = 1'-0"
0 2'-0" 4'-0" 8'-0" 16'-0"

Prepared For: Owner

Consultant:

Architect: ARCHETYPE ARCHITECTS
48 Union Wharf Portland, Maine 04101
(207) 772-6022 Fax (207) 772-4056

Project: 754 CONGRESS
754 Congress Street
Portland, Maine

Revisions:

Scale: As indicated

Date: SEP 12, 2019

ROOF PLAN

A1.05


BRAKES & SHOCKS
Our Specialty
BAKERY
The
LONGFELLOW
HOTEL
LONGFELLOW




The
PORTLAND MAINE
LONGFELLOW
HOTEL
EST. 2020
LONGFELLOW
Specialty
BAKERY
COFFEE
BAKERY

Memorandum
Department of Planning & Urban Development
Planning Division

To: Sean Dundon, Chair, and Members of the Planning Board
From: Deborah Andrews, Historic Preservation Program Manager
Date: December 3, 2019
RE: **Recommendation of the Historic Preservation Board to Designate Munjoy Hill Historic District and Six Individual Landmarks**
Mtg Date: December 10, 2019

INTRODUCTION

On November 20, 2019, the Historic Preservation Board voted unanimously (Jacob absent) to recommend to the Planning Board and Council that the area delineated on the map shown below be designated a local historic district subject to the provisions of Article IX of the Land Use Code (Historic Preservation). The Historic Preservation Board also voted unanimously to recommend that six individual historic structures located within the Munjoy Hill neighborhood but outside the boundary of the proposed district be designated as individual landmarks under the provisions of Article IX. The properties recommended for individual designation are 103 Congress Street, 7 Lafayette Street, 12 Montreal Street, 51 Monument Street, 21 Sheridan Street and 28 Waterville Street. The Historic Preservation Board's recommendations were based on findings that the district and the individual structures meet applicable designation criteria under Sec. 14-610 a and b and Sec. 14-611 of the historic preservation ordinance.

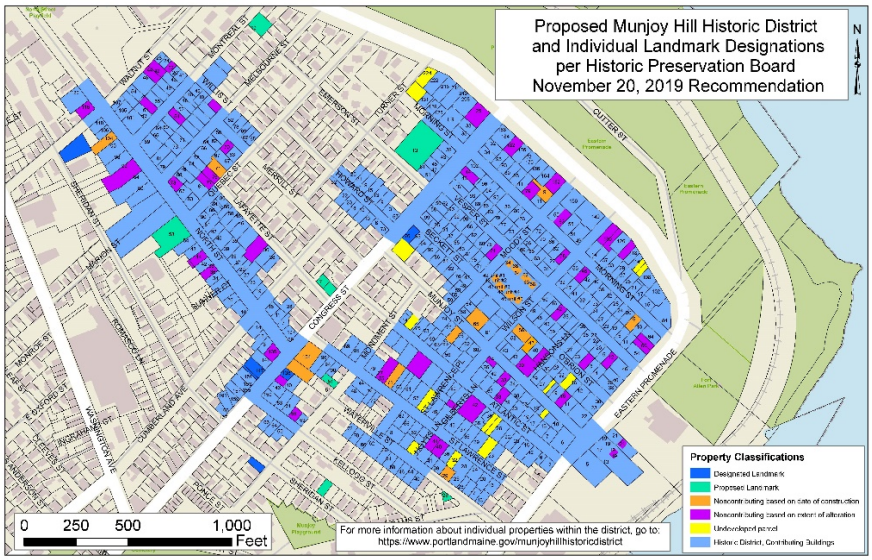

(see ATTACHMENT 1 for larger map)

The Historic Preservation Board's formal recommendation follows four preliminary workshops and two site walks. Public comment was taken at all review sessions. Additional public outreach consisted of four neighborhood meetings prior to and during the Historic Preservation Board review process.

The Historic Preservation Board's recommendation includes a number of supporting documents, including:

- Historic Context Statement describing the development history of Munjoy Hill and its place in the history of Portland, the architectural and cultural significance of the proposed district, a description of predominant architectural styles and a description of the visual character of the proposed district (ATTACHMENT 2)
- Map of the proposed district boundary, with every building color-coded to indicate its preservation classification (Landmark, Contributing, Non-Contributing). (ATTACHMENT 1)
- List of every property within the proposed district, with its classification. (The proposed district includes 425 structures.) (ATTACHMENT 3)
- Historic Resources Inventory including a description of every building in the proposed district together with its assigned classification. Each inventory form includes a current and 1924 view of the building (where available), a current description of the building and a summary of alterations since it was documented in 1924. (Sample forms are enclosed as ATTACHMENT 4)

ROLE OF THE PLANNING BOARD

Under the provisions of the historic preservation ordinance, proposed designations of local historic districts follow a three-step review process. Upon receipt of the Historic Preservation Board's recommendation, the Planning Board makes a determination as to whether the nominated district meets the criteria for designation identified in Division 3 of the historic preservation ordinance and "also consider(s) the effect of such designation on other aspects of the comprehensive plan of the city." Following deliberations, the Planning Board forwards its recommendation and report, together with the recommendation of the Historic Preservation Board, to the City Council for final consideration and a formal decision.

Unlike recommendations for district designations, recommendations for individual landmark designations are recommended directly to the Council for consideration. Given that the nominated buildings were identified as part of the overall Munjoy Hill neighborhood analysis and are closely related to the proposed district, the landmark recommendations are included in this report as well.

BACKGROUND, IMPETUS FOR HISTORIC DISTRICT EVALUATION

Consideration of a potential Munjoy Hill Historic District is the final component of a comprehensive planning initiative that began in late 2017 in response to residents' concerns about the scale and character of recent development as well as a rise in the number of buildings demolished on the Hill. In December 2017, the City Council approved a 180-day moratorium on

demolition within the R-6 zone of Munjoy Hill to allow time for Planning staff to conduct an analysis of the impacts and effectiveness of then-current zoning and design review standards on Munjoy Hill development. Staff was instructed to return to the Council by June 2018 with its recommendation for any amendments to the current zoning and/or adoption of additional planning tools to more effectively manage development.

When Planning staff returned to the Council in June 2018, staff recommended a number of new and revised planning tools to better manage development on Munjoy Hill. These included the creation of a "Munjoy Hill Neighborhood Conservation Overlay District" to implement new dimensional, design, and performance standards related to new construction and demolitions within the R-6 zone on Munjoy Hill. Also included was a recommendation to designate one or more historic districts within the larger Munjoy Hill neighborhood.

While the zoning amendments, demolition delay provisions and revised R6 design standards and process were adopted by the Council in June, the advance work necessary to formally consider designation of a historic district had not yet been undertaken. As staff explained, Portland's historic preservation ordinance requires that detailed documentation and analysis be conducted in order to delineate district boundaries, evaluate individual buildings within the district and make the case for designation. As such, the Council was not yet in a position to make a final decision on the recommendation to create a historic district on Munjoy Hill. At the June 2018 Council hearing, staff was simply seeking the Council's support for moving forward with consideration of a district. The Council instructed staff to move forward with the necessary documentation and return with a proposal.

DOCUMENTATION AND ANALYSIS

A detailed survey and analysis of Munjoy Hill's building stock got underway in late summer of 2018 with assistance from project interns and a preservation consultant. From this work, a draft district boundary was delineated, building classifications (landmark, contributing, non-contributing) were assigned, and a building inventory was prepared that includes a building description as well as current and historic views of every structure within the proposed district boundary and every proposed landmark outside the contiguous district. Finally, a report on Munjoy Hill's history, architectural and cultural significance and visual character was prepared for consideration by the Historic Preservation Board, Planning Board and Council as well as property owners and area residents. A number of informational meetings were held in the neighborhood during this preliminary documentation period. Once complete, Staff presented its draft historic district proposal to the neighborhood on April 30th. The April 30 presentation was followed by additional neighborhood meetings to answer questions and invite feedback. The proposal was formally introduced to the Historic Preservation Board on July 10th.

DISTRICT BOUNDARY DELINEATION—FACTORS CONSIDERED

Early on in the documentation/analysis phase, staff retained the services of preservation consultant Scott Hanson of Sutherland Conservation & Consulting to assess the building stock on Munjoy Hill and provide an independent recommendation regarding appropriate and defensible

district boundaries consistent with best practices in the preservation field. Mr. Hanson reviewed information from previous "windshield" surveys of the neighborhood and information provided by Greater Portland Landmarks including historical research and preliminary assessments of individual buildings in terms of their relative "preservation value". Mr. Hanson also walked the area to observe the current condition of buildings and changes in the development pattern. Mr. Hanson's report and preliminary boundary recommendation is enclosed as ATTACHMENT 5. The boundary recommended by Mr. Hanson includes structures representative of the key periods of development activity on Munjoy Hill, as well as other relevant considerations. Those include:

- 1850's development associated with the establishment of the Atlantic & St. Lawrence Railroad and Portland Company
- residential development prompted by the Great Fire of 1866
- 19th century blocks settled by African American residents
- late 19th and early 20th century development associated with influx of European Immigrants
- late 19th and early 20th century residential development along the Eastern Promenade

In terms of the scope of the proposed district, from the outset of this initiative, staff and project consultant Scott Hanson took an intentionally conservative approach to defining the limits of the district, focusing on those blocks within the larger Munjoy Hill neighborhood that are a) representative of the major periods of development that have shaped the current character of the Hill; *and* b) clearly retain most of their historic character. During the Historic Preservation Board's review process, some neighborhood residents questioned why the district does not include most of the neighborhood, arguing that there are a number of structures clearly related to those within the proposed district that have not been included. Staff explained that any area being considered for historic district designation should not only meet the test of architectural, historical and/or cultural significance, *but also* contain within its boundary a clear majority of structures that retain sufficient *integrity* to warrant preservation. Areas or blocks that exhibit a significant number of extensively altered buildings or where the historic development pattern is broken or inconsistent are generally not included within in the district boundary. Obviously, there are a number of individual buildings outside the proposed Munjoy Hill district boundaries that are similar to buildings within the district and that retain their historic integrity, however the general area around these structures was not found to meet the requirements for designation. As noted below in this report, four owners of historic structures outside the proposed boundaries have nominated their buildings for individual designation.

Another factor that contributed to the conservative approach taken was consideration of the need to balance a number of municipal goals as they apply to the Munjoy Hill neighborhood, including the goal of increased housing production. Staff recognized that other land use tools, in particular the demolition delay provision, zoning regulations and modified design standards provided in the recently-adopted Munjoy Hill Neighborhood Conservation Overlay District, were effective tools in their own right and likely more appropriate for other areas within Munjoy Hill.

The final proposed boundary is largely consistent with Mr. Hanson's recommendation, but reflects some adjustments by Staff based on additional analysis, public input as well as feedback from the Historic Preservation Board during its review process (described below).

FORMAL NOMINATION OF DRAFT DISTRICT

On July 10, 2019, following the introductory workshop on the draft district proposal, six members of the Historic Preservation Board formally nominated the proposed Munjoy Hill Historic District and two individual historic structures outside the district boundaries as individual landmarks. Nomination by at least two members of the Board is required under the provisions of Portland's historic preservation ordinance in order to move forward with the formal designation review process. Prior to the formal nomination, a petition signed by 23 Munjoy Hill property owners was submitted to the City requesting designation of a Munjoy Hill historic district.

Nomination of a district, while required to begin the official designation review process, does not limit the Historic Preservation Board's ability to amend the draft boundaries, change any building classification or make any modifications to associated ordinances as they affect the district. The same is true for the Planning Board and Council when they consider the Historic Preservation Board's recommendation. Additionally, nomination does not preclude the HP Board or Planning Board from deciding not to recommend designation.

SUMMARY OF HISTORIC PRESERVATION BOARD REVIEW PROCESS

The Historic Preservation Board held four preliminary workshops on the historic district proposal, including an introductory session on July 10th and three working sessions on September 4th, October 2nd and November 6th. Following the introductory session on July 10th and in preparation for subsequent workshops, two site walks were scheduled (July 31st and August 28th) to familiarize Board members with the neighborhood's building stock, observe proposed district boundaries and review the classification (or "preservation value") assigned to each building within proposed district.

The focus of the subsequent workshops was on specific sections of the boundary and individual properties that had been identified by Board members or area residents as meriting further discussion. During the workshops, staff described the rationale behind the boundary as originally delineated and noted some specific sections of the boundary that, upon further consideration, warranted adjustment. To aid the Board in its discussions, staff provided the building descriptions of those structures for which the assigned classification (contributing/noncontributing) was questioned. Where a potential expansion of the district was being considered, staff provided descriptions and photographs of the subject buildings in order for the Board to determine the relative merits of adjusting the boundary. Finally, staff brought to the Board's attention four buildings outside the proposed district boundary for which the property owner had requested individual designation. (This was in addition to the original two properties located outside the boundary that been proposed for individual landmark status—21 Sheridan and 101 Congress.)

DESIGNATION CRITERIA

In considering the designation of individual buildings as local landmarks and/or the designation of a contiguous area as a historic district, the Historic Preservation Board must find that the proposed landmark or district meets at least one of the six minimum criteria for designation outlined in the historic preservation ordinance (Article IX of the Land Use Code, Sec. 14. 610 a.). In the case of a nominated historic district, the Board must also find that the district meets the criterion for district designations as described in Sec. 14-610 b.. Separate from the above criteria, which address the question of *significance*, the Board must also find that the nominated landmark and/or district exhibits sufficient *integrity* to warrant the building's or district's preservation (Sec. 14-611).

Following are the ordinance's designation criteria:

Sec. 14-610. Minimum criteria for designation.

(a) The historic preservation board shall limit its consideration to the following criteria in making a determination on a proposed nomination of an area, site, structure or object for designation by ordinance as a landmark or district:

1. *Its value as a significant example of the cultural, historic, architectural, archeological or related aspect of the heritage of the City of Portland, State of Maine, New England region, or the United States;*

2. *Its location as a site of a significant historic or prehistoric event or activity which may have taken place within or which involved the use of any existing structure on the property;*

3. *Its identification with a person or persons who significantly contributed to the cultural, historic, architectural, archeological or related aspect of the development of the City of Portland, State of Maine, New England region, or the United States;*

4. *Its exemplification of a significant architectural type, style or design distinguished by innovation, rarity, uniqueness or overall quality of design, detail, materials or craftsmanship;*

5. *Its identification as the work of an architect, designer, engineer or builder whose individual work is significant in the history or development of the City of Portland, the State of Maine, the New England region, or the United States; or*

6. *Its representation of a significant cultural, historic, architectural, archeological or related theme expressed through distinctive areas, sites, structures or objects that may or may not be contiguous.*

(b) In the case of a nominated historic district, the historic preservation board shall also determine whether a substantial number of the properties, sites, structures or objects have a high degree of cultural, historic, architectural or archeological significance and integrity, many of which may qualify as landmarks, and which may also have within its boundaries other properties, sites, structures or objects which, while not of such cultural, historic, architectural or archeological significance to qualify as landmarks, nevertheless contribute to the overall visual characteristics of the significant properties, sites, structures or objects located within it.

Sec. 14-611. Integrity of landmarks and historic districts.

Any area, structure or object that meets the criteria in section 14-610 must also have sufficient integrity of location, design, condition, materials and workmanship to make it worthy of preservation or restoration.

FINDINGS OF THE HISTORIC PRESERVATION BOARD

During deliberations following the November 20, 2019 public hearing, the Historic Preservation Board found that the proposed Munjoy Hill Historic District as delineated in ATTACHMENT 1 meets the minimum criteria for designation, specifically Criterion #1 under Sec. 14-610 (a). The Board also found that the proposed district meets the criterion applicable to nominated districts under Sec. 14-1610 (b). Finally, the Board found that the proposed Munjoy Hill Historic District meets the integrity criterion as defined in Sec. 14-611.

Although not specifically before the Planning Board for consideration (landmark recommendations are forwarded directly to the City Council), the Historic Preservation Board also found as follows:

*the Munjoy Block at 103 Congress meets Criteria #1 and #6 under Sec. 14-610 (a), also Sec. 14-611;

*the Henry Rowe House at 7 Lafayette Street meets Criterion #6, also Sec. 14-611;

*the James B. Newell House at 12 Montreal Street meets Criterion #6, also Sec. 14-611;

*the residential structure at 51 Monument Street meets Criterion #6, also Sec. 14-611;

*the John Ford boyhood home at 21 Sheridan Street meets Criterion #3 and #6, also Sec. 14-611; and

*the residential structure at 28 Waterville Street meets Criterion #6, also Sec. 14-611

Based on the supporting documents in the 11/20/19 staff report and the above findings, the Historic Preservation Board voted 6-0 (Jacob absent) to recommend that the area delineated on the map in Attachment 1 be designated as the Munjoy Hill Historic District and the six individual structures listed above be designated as individual landmarks under the provisions of Article IX of the Land Use Code (Historic Preservation).

PLANNING BOARD CONSIDERATIONS – COMPREHENSIVE PLAN GOALS

In addition to confirming that the Historic Preservation Board's district recommendation is in conformance with the historic preservation ordinance's designation criteria (Division 3, Sec. 610 and 611), the Planning Board considers the relationship of the proposed designation as it relates to the stated goals of the Comprehensive Plan, Portland's Plan 2030. Consideration shall include not only the Plan's historic preservation goals, but also other goals applicable to the Munjoy Hill neighborhood. Under Sec. 14-610 (d) of the preservation ordinance, "The Planning Board and

Council .... shall also consider the effect of such designation on other aspects of the comprehensive plan of the city."

Historic Preservation Goals:

The recently-adopted Portland's Plan 2030 speaks to the significant role Portland's historic neighborhoods and commercial districts play in establishing its unique and authentic sense of place. Portland's Plan also speaks to the importance of the City's historic preservation program in sustaining and enhancing this sense of place. The report notes that "identifying and preserving historic resources stabilizes neighborhoods, makes economic sense and contributes to a distinct sense of place that helps make Portland such a desirable place in which to live, to visit, and to invest."

The Plan's chapter on historic resources includes the following goals and strategies applicable to the current Munjoy Hill historic district initiative:

Goals

- *Identify, document, designate and preserve Portland's historic resources, including individual structures, neighborhoods, parks, cemeteries and archaeological resources.*
- *Educate and engage residents and visitors in appreciation of Portland's unique heritage.*
- *Promote historic preservation as a key economic, sustainability, and community development strategy.*
- *Stabilize and enhance historic areas of the city by ensuring quality investment in existing structures and compatible infill development.*
- *Ensure an appropriate balance of continuity and change as Portland grows and evolves.*

Strategies

- *Based on survey findings and input from applicable stakeholders, document and designate resources of historic, architectural, and/or cultural significance to encourage thoughtful building rehabilitation, deter demolition, and support neighborhood revitalization.*

The proposal to designate a Munjoy Hill Historic District is pursuant to these stated goals and strategies.

Other Comprehensive Plan Goals

A number of other land use goals addressed in Portland's Plan are relevant to the discussion of a potential Munjoy Hill historic district. They include:

Housing:

- *Increase, preserve, and modify the overall supply of housing city-wide to meet the needs, preferences and financial capabilities of all Portland residents.*

- *Encourage additional contextually appropriate housing density in and proximate to neighborhood centers, concentrations of services, and transportation nodes and corridors as a means of supporting complete neighborhoods.*

- *Pursue policies to enable people who work in Portland to have the option to live in Portland.*

- *Encourage quality, sustainable design in new housing development.*

The residential building stock within the proposed district provides for a broad range of household types, including small-scale single family homes; larger-scale former single family homes, many of which have been or could be converted into two or more units; double-houses or duplexes, also which have been or could be subdivided; triple-deckers and apartment buildings. As has been observed in portions of the West End Historic District, small-scale houses offer opportunities for homeownership for those at more modest income levels and the continued presence of these smaller, often vernacular, homes in the neighborhood promotes income diversity within the neighborhood over the long term.

There is nothing inherent in historic district designation that precludes the construction of affordable housing. Within the proposed district, there are a number of open parcels as well as buildings classified as "non-contributing", which can be demolished as of right. Depending on the land cost and availability of affordable housing subsidies, an affordable housing project is possible, as has been shown in several such projects in the West End and Deering Street historic district.

During the last five years, approximately 325 new units of affordable housing were built within Portland's historic districts. That figure does not include conversion of upper floors of existinghistoric commercial structures into housing units, the creation of additional units within existing residential structures, or the conversion of existing garages or carriage houses into residential units.

Regarding the general issue of affordability, a common assumption is that owning property in a historic district will inevitably lead to more expensive repairs or renovations. Nothing in the ordinance requires that a property owner undertake work or reverse previous alterations. Additionally, replacement-in-kind is specifically exempt from review under the historic preservation ordinance. That means, for example, that first-generation vinyl windows can be replaced with second-generation vinyl windows. Work on less visible building faces are often allowed more flexibility in terms of material choices, etc. Staff and the Historic Preservation Board work with property owners on a regular basis to find reasonable, cost-effective measures to meet their needs.

Enclosed as background information on the relationship between housing affordability and historic preservation is a report prepared by economist Donovan Rypkema for the National Trust for Historic Preservation, *Historic Preservation and Affordable Housing: The Missed Connection.*

Similarly, historic district designation does not preclude the creation of additional units within existing structures, the adaptive reuse of accessory structures such as garages and carriage houses for housing or the construction of accessory dwelling units on existing larger lots. Maximum densities remain unchanged. Building additions are allowed, as is the demolition and replacement of non-contributing rear building ells to provide more units. In the West End Historic District, for example, several existing garages or former carriage houses have been converted to housing, rear ells have been removed for larger additions, dormers have been added to accommodate an additional unit within the attic, etc.

Historic district designation also does not preclude increasing housing density through new construction and additions. As noted above, there are opportunities within the proposed district for new construction, as well as outside the district boundaries on Munjoy Hill. Larger-scale, multi-unit developments, if sensitively designed, can be accommodated within historic districts dominated by smaller scale historic structures and there are a number of examples within the city that demonstrate an effective historic preservation design review process for compatible contemporary new development. Historic designation is not intended to freeze new development or provide prescriptive design solutions for new development or renovations, and has provided a flexible framework to guide preservation and change in Portland since the program was first established in 1990.

Sustainability:

- *Make energy efficiency and renewable energy measures a city-wide priority.*

- *Minimize the generation and environmental impacts of solid waste.*

As noted in the Portland's Plan, recent research by the National Trust for Historic Preservation found that the re-use or rehabilitation of existing buildings offers significant environmental benefits over new construction. According to the Report, *The Greenest Building,* each year approximately 1 billion square feet of buildings are demolished and replaced nationwide, resulting in significant environmental impacts associated with demolition and waste disposal, the production of new raw materials, and new construction. The study found that reusing an existing building can result in 4 to 46% less environmental impact than new construction, depending on the type of building, location, and level of energy efficiency. Even when new construction is designed for optimal energy efficiency, it can take 10 to 80 years for a new building to offset the negative environmental implications of its construction.

Portland's historic preservation ordinance does not prohibit the installation of solar panels, heat pumps or other alternative energy measures, as evidenced by numerous installations in both residential and commercial historic districts.

RELATIONSHIP OF PROPOSED HISTORIC DISTRICT DESIGNATION TO MHNCD MEASURES

The regulations currently in place under the Munjoy Hill Neighborhood Conservation Overlay District govern new construction and demolition. The Overlay District contains dimensional and design standards which revise maximum building heights, address rooftop appurtenances, regulate parking placement and its effect on front facades and regulate roof forms. Under the MHNCD, the Alternative Design Review option, which had been suspended during the period the Overlay District was being studied, was reinstated, but with the introduction of procedural and substantive changes.

The demolition requirements in the Overlay District include a 12-month stay of demolition for structures determined by the Planning Authority to be "preferably preserved". The delay period can be reduced if the applicant elects to have their new construction proposal reviewed by the Historic Preservation Board and the Board finds that the design proposal meets the historic preservation ordinance's new construction standards. In that case, the stay is lifted and the "preferably preserved" building can be demolished and replaced. Alternatively, the applicant can wait and move forward with demolition after the 12-month stay. The premise of this demo delay ordinance is that the delay will encourage parties to explore alternatives to demolition. There is nothing to prevent demolition, however, unless the Historic Preservation Board nominates the building for individual landmark designation and the Council approves such designation.

With respect to design review of new construction *not* involving demolition of a preferably preserved structure, the dimensional and design standards included in the Overlay District apply. If an applicant elects to pursue a more contemporary design than would be allowed under the R-6 zone's base design standards (which are relatively prescriptive), the applicant may opt for the Alternative Design Review process which allows for more flexibility in design. Under this process, the review is conducted in a public meeting and the Historic Preservation Board is charged with conducting the review. The applicant must meet the *intent* of the R6 design principles and standards and demonstrate that the project will be compatible with its immediate context. The R-6 Alternative Design Review was further amended to allow for additional design flexibility when social or environmental public benefits are proposed as part of the project, including the provision of sustainable design, affordable housing units or green technology.

Historic District designation puts into place regulations and review standards that govern not only demolition and new construction, but also alterations and additions to the historic structures that make up the bulk of the neighborhood. A key premise behind historic preservation measures is that the historic buildings that define a historic neighborhood and give it its valued character warrant stewardship. It is not enough to implement regulations that require infill construction to be compatible with its historic context if the historic structures that make up that context may be altered without any form of review or guidance. Diminishment or destruction of historic character can result from major renovations or from incremental changes over time. Historic preservation regulations are not intended

to *prevent* changes to historic buildings but rather to provide a mechanism to *manage* change so that the historic character of the buildings and the neighborhood as a whole is maintained and enhanced over time.

When a historic district is established, every building is assigned a classification or "preservation value" at the time of designation that determines the type, standards and limits of jurisdiction that will apply in any future review. Alterations and additions to "contributing" structures are reviewed under the *Secretary of the Interior's Standards for Review of Alterations*. These standards, which are applied in historic districts throughout the country, are intentionally general in nature, as they are written to address a wide variety of potential alterations and an equally wide range of historic resources.

Each review standard includes language intended to ensure a level of reasonableness when staff or the HP Board applies the standard—language such as "every reasonable effort shall be made…", "wherever feasible…", and "…should be avoided when possible". Under the historic preservation ordinance, alterations or additions that are not readily visible from a public way are not subject to review. Alterations to "noncontributing" structures are governed by a more lenient set of review standards and noncontributing structures may be demolished as-of-right. Any replacement building is subject to review under the historic preservation ordinance's new construction standards.

The historic preservation ordinance's new construction standards are, likewise, intentionally general in nature and identify broad areas of compatibility (scale and form; composition of facades; relationship to the street) that must be considered by both the applicant and the Board in developing or reviewing a design proposal. The review process for new construction makes careful analysis of a project's surrounding context a high priority. To that end, all design proposals submitted for review are required to be shown *in context.*

The *Historic Resources Design Manual*, which was adopted by reference as a component of the preservation ordinance, includes a chapter on new construction that elaborates on the individual review standards and provides examples of successful and unsuccessful responses to the standards. The preamble to the chapter summarizes the intent behind the ordinance's new construction review standards. The preamble makes clear that while the ordinance requires a context-sensitive solution, the design standards are intended to provide a level of flexibility in responding to the design cues present in a given context. The review process itself is conducted by members of a board comprised of individuals with expertise in historic rehabilitation, construction, architecture and/or design.

With respect to demolition, landmark or contributing structures cannot be demolished unless 1) the applicant can meet the ordinance's economic hardship test which requires demonstration of "no reasonable use of the structure"; or 2) the Historic Preservation Board, upon request of an applicant, amends or rescinds the original landmark or contributing classification. The ordinance includes a process and review criteria for considering such requests. Since the ordinance went into effect in 1990, a number of buildings in historic districts have had their classification changed. One of the bases for changing a building classification from "contributing" to "noncontributing" is receipt of evidence that the building is structurally unsound. It should be noted that a proposal for *partial* demolition, for example demolition of a rear ell, is typically reviewed as an alteration.

NEXT STEPS

At Tuesday's workshop, Historic Preservation Board Chair Julia Sheridan will briefly present the Board's recommendation and Staff will review the review process to date, the basis for the proposed boundary, etc. At this time, Staff seeks feedback from the Planning Board regarding the proposed district designation, including any requests for additional information or responses to specific questions. Following Tuesday's session, the Planning Board may elect to proceed to a public hearing and formal recommendation or schedule an additional workshop.

ATTACHMENTS

1. Map of Proposed Munjoy Hill Historic District and Nominated Landmarks
2. Historic Context Statement
3. List of Properties within Proposed District
4. Sample forms from Munjoy Hill Historic Resources Inventory
5. Report and Boundary Recommendation from Scott Hanson, Sutherland Conservation &
6. "*Historic Preservation and Affordable Housing: The Missed Connection"*, by Donovan Rypkema for the National Trust for Historic Preservation
7. Public Comment

Proposed Munjoy Hill Historic District and Individual Landmark Designations per Historic Preservation Board November 20, 2019 Recommendation

N

Eastern Promenade

Fort Allen Park

0 250 500 1,000 Feet

For more information about individual properties within the district, go to:
https://www.portlandmaine.gov/munjoyhillhistoricdistrict

Property Classifications

- Designated Landmark
- Proposed Landmark
- Noncontributing based on date of construction
- Noncontributing based on extent of alteration
- Undeveloped parcel
- Historic District, Contributing Buildings

Munjoy Hill Architectural Development & Context Statement

April 2019



Development History: 1786-1866

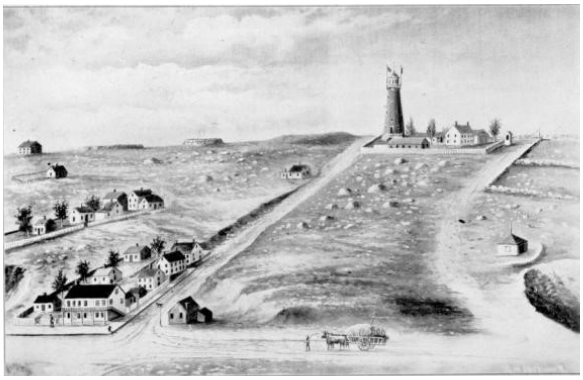

Munjoy Hill in the Forties by Charles Goodhue
Collections of the Maine Historical Society, MMN 4144



Munjoy Hill in 1826 as drawn by Lemuel Moody
Collections of the Maine Historical Society , MMN 100727

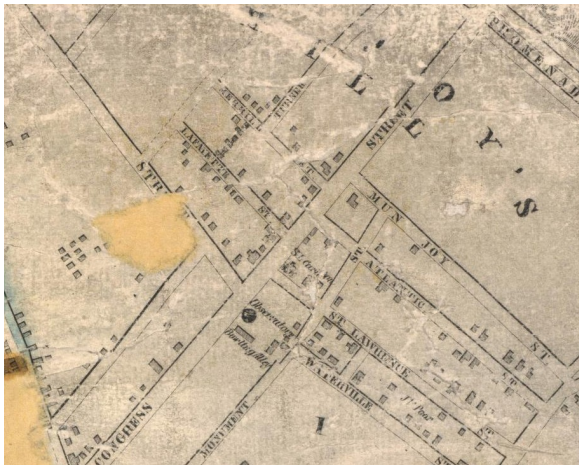

Munjoy Hill in 1851 from the H.F. Walling *Map of Cumberland County.*

Munjoy Hill rises 161 feet above Casco Bay on the eastern end of the Portland peninsula. The Hill's namesake George Munjoy (c1626-1680) settled near present day Mountfort and Fore Streets in 1659. He fled Portland after an Indian attack in 1676 and never returned.

The center of activity on Munjoy Hill for many years was the Portland Observatory (1807) which served as a signal communications tower for merchant vessels. Adjacent to the Observatory was a bowling alley and the house of its founder and operator Lemuel Moody.

Although Munjoy Hill came to be the city's most densely populated and ethnically diverse neighborhood, it was one of the last neighborhoods on the peninsula to be developed. Its primary functions from the city's founding in the 1630s until the 1840s were as an occasional gathering place and a pasture for cows. Throughout the mid-18th century a group called the Munjoy Proprietors erected a system of stone walls on the hill, with a gate near the present-day intersection of Washington Avenue and Congress Street. The Munjoy Proprietors sold "cow rights" to locals for pasturing their cattle.

The cow pastures were also the site of large open-air events. The fields between the Observatory and Eastern Cemetery were popular for 4th of July celebrations, circuses, and militia musters.

Early structures on the hill in addition to the Observatory included a hospital for small pox victims, a gun house, and Fort Sumner. The fort was built in 1794 off North Street to protect the city from attacks from the west and Back Cove.

In 1796 Tukey's Bridge was built, connecting the peninsula to the mainland. Washington Avenue was laid out to connect the city to the bridge in anticipation of a residential building boom that didn't immediately materialize.

Instead, groups of structures were scattered across the hill, first near the gate to Munjoy Hill,

Development History: 1786-1866



Munjoy Hill in 1857 from the H.F. Walling *Map of Cumberland County.*



Congress Street on Munjoy Hill after the Fire of 1866
Greater Portland Landmarks

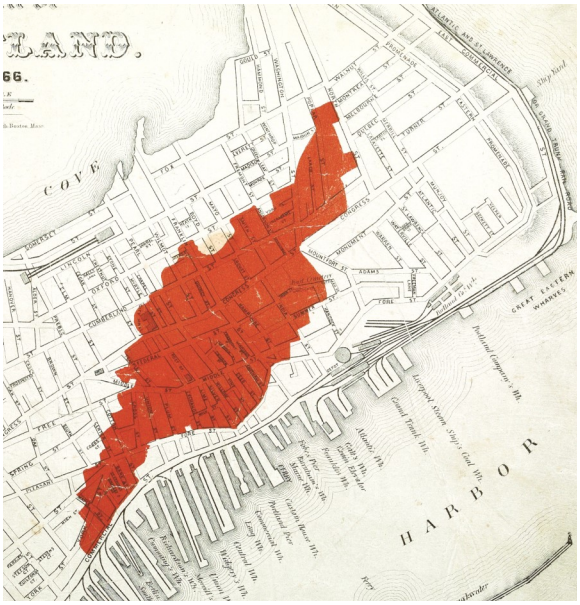

Extent of the Great Fire of 1866
Greater Portland Landmarks

then along Cumberland Avenue, Congress and Lafayette Streets.

As the Hill's population increased, in 1836 City officials bought up land along the shoreline, despite public outcry at the waste of public money. Much of this area is now the Eastern Promenade.

While the Eastern Promenade was preserved for future public use, on the opposite side of Munjoy Hill tons of gravel were removed to fill in Back Cove. Moses Gould, owner of 18 acres on the Hill, formed the Back Cove Land Co. to fill and develop the mud flats in what is now Bayside.

Expansion on the waterfront was precipitated by the founding by John A. Poor of the Atlantic and St. Lawrence Railroad. Chartered in 1845 and opened in 1853, the railroad connected Portland to Montreal, Quebec. Poor also helped found the Portland Company on Fore Street in 1847 to build locomotives for his new railroad. The upsurge in activity along Fore and India Streets in the 1840s and 1850s led to a residential boom on the Hill, attracting workers from the Portland Company and railroad. Many of these homes were built in the Greek Revival Style that predominated during this period.

On the western side of the Hill, the area between Washington Avenue and North Street developed a unsavory reputation in the early 19th century. In 1849 a riot broke out in a bawdy house. During the riots one man was killed and a dance hall was destroyed by fire. This area would be mostly destroyed in a few decades by a catastrophic fire with significant impact on the entire city.

The Great Fire of July 4th and 5th, 1866 spread from Commercial Street to North Street. It destroyed 1,500 buildings and left over 10,000 people homeless. The field below the Observatory was turned into a makeshift tent-city by the Army, then replaced by wooden dormitories until permanent housing could be built.

Several early homes on the east side of North Street survived the fire including the Benjamin Noble House (1856) at 65 North Street and the double house of Eliphalet Clark and Moses Gould at 79 North Street (c1847).

Development History: 1866-1917



Munjoy Hill from a *Bird's-Eye Map of Portland* Published by J. J. Stoner in 1876



The index of a map prepared by the city Tax Assessor 1882-1884 depicts the extent of development on Munjoy Hill.

Following the Great Fire, the city's need for housing drove development on Munjoy Hill. This development was largely middle-class homes, with a few high style residences in the Italianate and Second Empire styles. A few years earlier in 1863 the city's horse drawn street car line had reached Munjoy Hill helping to make the hillside areas attractive for development after the fire. Residential development spread out from existing residential areas eastward toward the Promenade on Turner, Quebec, Melbourne and Montreal Streets, which had been subdivided 1857 and 1858.

In 1874 the Deering family heirs subdivided their land along Congress, Sheridan and Kellogg Streets. A few years later in 1879 the family subdivided additional land along the east side of Munjoy Street and the north side of Congress Street from Howard Street to the Eastern Promenade.

By the 1880s, Munjoy, Atlantic and St. Lawrence Streets were largely built out. These long streets extended between Fore to Congress and were interconnected by short streets like Sherbrooke Street or small lanes like Gilbert's Lane. To the east, a pond initially blocked the extension of several streets westward to Congress Street. The pond was located in the area generally occupied in the 20th century by the Adams School (*image bottom left*). Within the next ten years the area would be drained and developed. One block within this formerly wet area would become one of four car barns for the Portland Railroad Co. after the street car line expanded its route on the Hill from Congress Street, down Morning Street to the Eastern Prom. It then wended its way back to Congress Street along Beckett, Wilson, and Atlantic Streets. The company's street cars lines were all electrified by 1896.

Development History: 1866-1917



Portland Railroad Company's car barn on Beckett Street.



Munjoy Hill Reservoir c1920.
Portland Water District, MMN 82239

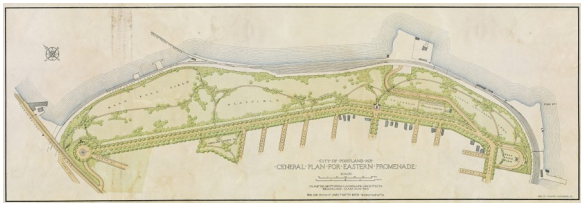

Olmsted Brothers design for Eastern Promenade.



J.J. Nissen House, 286 Eastern Promenade in 1924.

In 1889 the Munjoy Hill reservoir was built at the corner of North and Walnut Streets by the Portland Water Company. The reservoir was built to better serve customers in the East End and had a capacity of 20,000,000 gallons. The reservoir burst a few years later in 1893, killing four people and destroying four homes off Walnut Street. The reservoir remained in operation until 1970 as a water supply; today the site is a parking lot above a large underground reservoir.

In the last decade of the 19th century, wealthy local families began to appreciate the Eastern Promenade's sweeping views and began erecting grand homes opposite the City-owned green space. The residential development followed efforts begun by the city in 1878 to improve the publically owned green space. In 1890 the City acquired Fort Allen to extend the city's park space. The park and perimeter roadway became key elements in the park and boulevard system envisioned by Mayor James Phinney Baxter and the Olmsted brothers landscape firm in 1905.

Twenty-one of the thirty-three single family homes on the Eastern Promenade were built between 1888-1912 in the Queen Anne and Colonial Revival styles. Samuel D. Plummer, a Portland real estate dealer, built his Queen Anne house at 140 Eastern Promenade in 1898. The Griffin Brothers, prominent fruit dealers on Portland's waterfront, built large homes on the Promenade. Lindsay B. Griffin first built a house at 182 Eastern Prom in 1897, then built a new Colonial Revival House at 188 Eastern Prom in 1908. His brother John built a similar home at 150 Eastern Prom in 1910. One of the prominent Colonial Revival homes on the northern end of the Promenade was the 1913 residence of John. J Nissen, founder of Nissen Bakery at 59 Washington Avenue.

Development History: 1866-1917



Samuel D. Plummer House, built 1898 at 140 Eastern Promenade.



Triple deckers on Munjoy Hill.



Triple deckers on Munjoy Hill.

Between 1895 and 1917 "triple deckers" or "flat houses" were built in large numbers on Munjoy Hill. They are particularly prevalent on Morning, Vesper and Beckett Streets, as well as Sheridan and Kellogg Streets. The land on Morning, Vesper and Beckett Streets was owned by the Deering and Fessenden families and was some of the last vacant land to be laid out on Munjoy Hill. The triple-deckers and the few apartment buildings built during this period were multi-family residential building types that housed the Hill's increasing immigrant population from Italy and Northern and Eastern Europe.

Portland was a busy maritime port in the early 20th century and served as an immigrant port of entry. Portland's primarily English population was joined by groups from Ireland, Canada, Portugal, Scandinavia, Italy, Eastern Europe, and Greece. Munjoy Hill's close proximity to the downtown made it attractive to many immigrant families. Immigrant families settled on the Hill and often built neighborhood businesses like the Capozza brothers barber shop or Paul Blumenthal's grocery store.

By World War I, most of the neighborhood's residential lots were filled, however land to the west along North Street and the Eastern Promenade remained vacant.

Development History: 1917 – Present

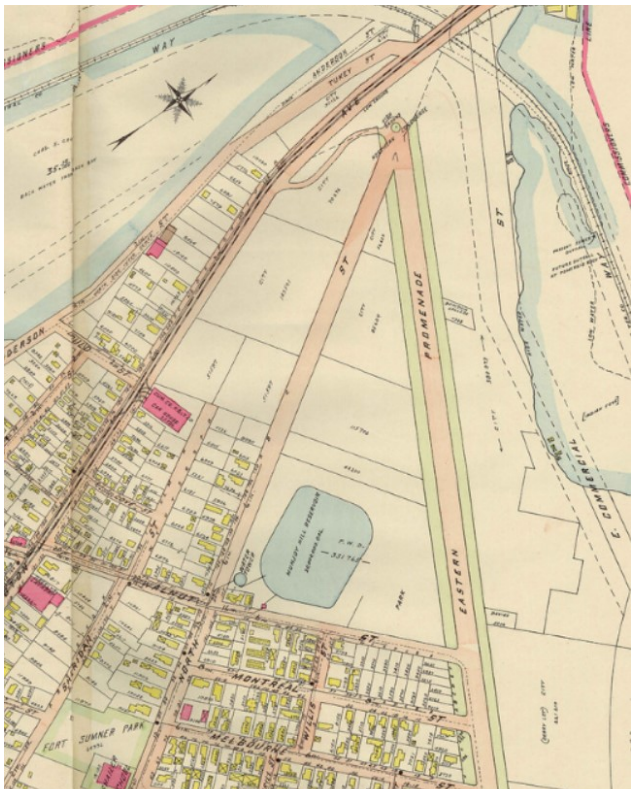

Map of the northern end of Munjoy Hill depicting vacant land. *Richards Standard Atlas of the City of Portland,* 1914.



View of the Munjoy Hill Reservoir and the Jack school beyond. Portland Water District, MMN 94455.



View of Portland House in the distance.

By the late 1920s, although most of the neighborhood's residential lots had been developed, some lots remained vacant, particularly along North Street and the Eastern Promenade. During the 20th century infill development and construction of new institutional and educational buildings slowly filled the remaining land.

In 1929 the Jewish Home for the Aged was designed by architect Herbert Rhodes and built at 158 North Street.

Jack Junior High School was built on North Street near the Munjoy Hill Reservoir on land gifted to the city by the Portland Water District in 1943 for seventh and eighth grade students in the Munjoy Hill neighborhood. The school was later used as an elementary school. The building was closed in 2001 and replaced by the East End Community School built on the same site in 2006.

In 1947 the housing development at 304 Eastern Promenade was built on the site of homes destroyed in the reservoir flood. The development includes seven buildings on a 1.7-acre lot with parking along the perimeter of the development.

A few years later in 1950 at the corner of Eastern Promenade and Quebec Street, six multi-unit buildings were constructed on a one-acre lot. Like the other mid-twentieth century housing project on the Eastern Promenade, it is a low scale development and does not follow the traditional street pattern.

Today, the Munjoy Hill skyline is dominated by two large-scale residential buildings. The Portland House, overlooking the Fore River at 45 Eastern Promenade, was built in 1969 as an apartment building and today houses over 100 residential condominiums.

Promenade East, purportedly the first high rise condominium building in Maine, was built in 1975. The building is fourteen stories high and accommodates 80-units. Its interior has a unique layout with two floors sharing a single hallway.

Architecture



Henry Homer House, 81 Congress Street (c1829) in 1924.



7 Lafayette Street (1849 - 1852) in a 1924 image.



7 Lafayette Street (1849—1852) in 2018.

Architectural styles of the Hill's residences provide useful clues to the development and history of the neighborhood. While few buildings from the Hill's early settlement remain, there are many buildings from the three major periods of construction: early subdivisions for housing for workers along the expanding waterfront (1847-1866), Post Fire development (1866-1890s) and housing for Portland's expanding immigrant population (1890s -1930). Research conducted by Greater Portland Landmarks in the early 1980s provided dates for many of the homes on Munjoy Hill.

A number of buildings on Munjoy Hill exhibit the characteristics of more than one style, either because they are transitional between stylistic periods or due to later additions. Some buildings, altered by the replacement of exterior siding and the removal of exterior features display no particular architectural style.

Early Settlement (1785-1845)

The few buildings that remain from the early settlement on Munjoy Hill are wood–framed, three -bay, side gable capes and are generally located near the crest of the hill. The Henry Homer House (c1829) at 81 Congress Street is a one-and-a-half story three bay cape that has been altered by a side addition. A slightly later example is the dwelling at 7 Lafayette Street (1849-1852).

Another altered example of an early house is located at 62 Munjoy Street. The first floor was a five-bay cape built c1790 in the Federal period. The cape was likely moved and a second floor added c1857 by builder William Hoit.

Early Subdivisions (1845-1866)

Two early subdivisions of land, one off North Street and the other off Fore Street include good examples of the Greek Revival style. These homes typically feature a strong post and lintel door surround. While most homes in this style on Munjoy Hill are wood framed, there are several brick Greek Revival homes in the neighborhood. The brick dwellings usually feature stone lintels over their windows.

Architecture



Moses Gould and Eliphalet Clark at 79-81 North Street (1847).



Joseph Flower House at 87 St. Lawrence Street (c1852).

One of the best examples of a brick Greek Revival is the Robert Dresser House (1850-1851) at 2 Atlantic Street. The two-story building has stone lintels above the windows and a recessed entry door with sidelights. Another early example is the double house of Moses Gould and Eliphalet Clark at 79-81 North Street (1847). Like the Dresser House, the Gould-Clark House has recessed entries. The entry at 81 North Street retains its entry sidelight design. Altered by Italianate entry hoods, the Greek Revival style is evident in the building's strong gable-end pediments, the recessed brick window bays, and the stone lintels and sills at each window.

Additional brick dwellings are located at 16 Atlantic Street (1852-1853), 55 Atlantic Street (1855), 62 Waterville Street (1855) and 66 Waterville Street (1855-1857). A late example of a brick Greek Revival dwelling is the Gabriel Mark House at 74 St. Lawrence Street built in 1872.

St. Lawrence, Atlantic and Waterville Streets contain a high percentage of Greek Revival frame residences. There are thirteen examples of the Greek Revival style built between 1845 and 1855 on Atlantic Street. Nineteen Greek Revival frame dwellings built between 1847 and 1860 are located on St. Lawrence Street and nine built between 1846 and 1867 are located on Waterville Street.

The neighborhood contains examples of both gable front Greek Revival homes and side gable dwellings. Gable front dwellings are usually 2 1/2 stories, while one and two story examples of side gable dwellings are also present.

One of the most prevalent builders on Munjoy Hill in this period was William Hoit. Research indicates he was responsible for the construction of at least ten wood frame homes on Munjoy Hill in the 1850s. Most of these were Greek Revival homes, although two examples of his construction in the Italianate style are extant at 86 and 104 Congress Street.



Ellen Moody York House, 140 Congress Street in 1924.



A Gothic Revival dwelling on North Street in 1924.



Tall narrow paired windows like these at 80 North Street are typical of the Italianate Style.

Another early 19th century architectural style is the Gothic Revival. There are few examples of the Gothic Revival style on Munjoy Hill. 140 Congress Street is the former home of Ellen Moody York, the granddaughter of Lemuel Moody and proprietress of the Portland Observatory until 1925. Her dwelling once featured ornate decorated vergeboards and drop mold window trim that characterized the Gothic Revival style. Many of the dwelling's details were lost when the dwelling was altered by the addition of a church sanctuary in the mid-20th century.

A second example of the style is located at the rear of 21 North Street. Less decorative than 140 Congress Street, the North Street dwelling features decorative verge board, steeply pitched gable wall dormers, and a projecting two story entry bay with a similarly steep gable roof and decorative verge boards.

Post-Fire Development (1866-1890s)

Most of the extant homes built in the aftermath of the Great Fire of 1866 were constructed in the Italianate and Second Empire styles that predominated during that period. Often similar in form to the gable fronted Greek Revivals homes, the typical Italianate house has more elaborate decoration and machine-made details. The details, such as brackets, were more readily available and affordable than earlier hand carved details due to new machinery technology.

Characteristic features of the Italianate style include tall paired windows, arched window openings, decorative door hoods, brackets below the roofline and bay windows.

The Italianate style predominates on Munjoy Hill. Projecting bays and door hoods are common features on both vernacular dwellings as well as more elaborately detailed homes on the Hill. The Italianate style is also found on commercial and civic buildings like the Shailer School (1880-1881) on North Street.



Bay windows on gable front home are a typical feature on the Hill.



The Ann Freeman House on Congress Street is an early example of the Italianate Style. It is a designated local landmark.



While most Italianates style homes have a side hall plan, the Hill also has several examples of an L-plan house with a side entrance like this one at 56 St. Lawrence Street built c1860.

Brick examples of the style include the two-bay, two-story Ann Freeman House (1857) at 147 Congress Street and the three-story double house at 96 St. Lawrence Street. Both examples have hip roofs that formerly were capped by cupolas.

Early examples of the gable end form are the Benjamin Noble House at 63 North Street (1856) and the Jason H Davis House at 23 O'Brion Street (1866-7).

The three bay, one-and-a-half story Cushing House at 83 Munjoy Street (1878) is an unusual example of the Italianate style on Munjoy Hill. Unlike most of its neighbors, the dwelling is set far back on its lot and has an unusual central projecting entry tower form.

A third plan type is the L-shape plan. An example of the L-plan form with side entry, usually off a porch, is the Samuel Libby House at 30 Lafayette Street (late 1870s). Like many dwellings with this form, the Libby House has a narrow gable front form with a projecting bay window on the street façade.

Two of the most prevalent builders on Munjoy Hill in this period were William H. and John Weeks. Research indicates the Weeks family built several Italianate wood-frame houses on Vesper and O'Brien Streets in the last decades of the 19th century.



The Alfred Roberts House (1876) at 80 Quebec Street.



The Second Empire at 60 Kellogg Street retains its historic slate roof, window hoods, and corner boards.



39 and 45 North Street on Munjoy Hill in 1924

The Second Empire style shares many of the Italianate style's characteristics and was popular during the same time period. What distinguishes the Second Empire style, however, is its mansard roof form. It is another predominate style on Munjoy Hill.

Several good examples of small scale, one-and-a-half-story Second Empire dwellings are located on the Hill. The Alfred Roberts House (1876) at 80 Quebec Street and the John C. Main House (1876) at 52 Melbourne Street each have detailed woodwork over the dormers and elaborate brackets supporting the entry hood. The Mains House has a two-bay side hall plan, while the Roberts House has an unusual back hall plan and features bull's eye rosettes as a decorative exterior detail. Like the Mains and Roberts Houses, the Second Empire at 60 Kellogg Street has elaborate dormer and cornice details. It retains its historic slate roof, window hoods, and corner boards.

The late 19th century brought larger scale dwellings to the neighborhood, particularly on North, Congress and Merrill Streets. Larger two-and-a-half-story examples of the Second Empire style are present at 32, 39, 45, 96 North Street. The V.B. Fuller House (1884) at 45 North Street retains its double entry doors, bracketed entry hood, two-story projecting bays with narrow windows, cornice brackets, and dentil molding. The A.L.R. Huston House (1886) at 39 North Street retains its historic carriage house.



Swag detail on entry porch gable at 129 Morning Street.



William N. Taylor House (1895) at 64 Eastern Promenade.



Samuel D. Plummer House (1898) at 140 Eastern Promenade.

Housing a Growing Population (1890s-1930)

The extant homes built on Munjoy Hill at the turn of the century are constructed in the diverse styles that predominated during that period. The two most prevalent styles are Queen Anne and Colonial Revival.

While homes from this era located on the Eastern Promenade are often elaborate and large scale, on interior streets the Queen Anne and Colonial Revival style tend to be smaller scale and follow the same development pattern as earlier homes. Many Queen Anne homes are gable front with a side hall plan, like earlier Greek Revival, Italianate, and Second Empire style homes on the Hill. Only the stylistic details have changed. Similarly, Colonial Revival homes may also have a gable front or may have a hip roof.

The Queen Anne style features a variety of distinctive patterns of decorative detailing. Spindlework with delicate porch details and lace-like brackets is one common type of Queen Anne architectural embellishment found on Munjoy Hill. Another is the Free Classic, with classical columns and decorative details borrowed in part from the early 19th-century Federal period of architecture.

Towers are prominent feature in Queen Anne dwellings and towers are present on the R. Cutler Libby House (1895) at 34 Congress Street, the William N. Taylor House (1895) at 64 Eastern Promenade, the Robert D. Libby House (1901) at 84 Eastern Promenade, and the Samuel D. Plummer House (1898) at 140 Eastern Promenade.

The John E. Farr House (1893) at 39 Congress Street is a good example of a gable front Queen Anne dwelling. The gable front projects beyond the front wall and encompasses the two story projecting window. Typical of the Queen Anne style, the dwelling features a Palladian window, multiple window sizes and styles, panel work, patterned shingles, spindlework, dentil moldings, and gable ornament in the entry portico. A unique feature of the house is the different decorative pattern of the lintels on the first and second floor window trim.



Colonial Revival house at 188 Eastern Promenade.



Colonial Revival house at 150 Eastern Promenade.



Colonial Revival apartment house at 164 Eastern Promenade.

The Colonial Revival style on Munjoy Hill is represented in a wide range of residential building types: large-scale single-family homes, small-scale single-family homes, and on triple decker buildings.

Two excellent examples of the Colonial Revival style are the John W. Griffin House (1910) at 150 Eastern Promenade and the Lindsay B. Griffin House at 188 Eastern Promenade (1908). Both dwellings have a hipped roof with a barrel roof dormer, but one has a full width porch and the other has a central portico. Both have a symmetrical façade and entry door with flanking sidelights that is typical of the Colonial Revival style.

Enoch Richards (1854-1944) was one of the most prolific builders on Munjoy Hill. He built at least sixteen houses on the Eastern Promenade and Beckett, Vesper, and Moody Streets. He built single-family homes, two-units and triple decker apartment buildings in both the Queen Anne and Colonial Revival Styles.

The Colonial Revival Enoch C. Richards Apartment House (1903-1904) at 164 Eastern Promenade features a distinctive element Richards used on many of his buildings--large brackets to support an deep overhanging roofline. This detail is also present on his former home at 162 Eastern Promenade, his triple decker building at 45 Quebec Street and four triple decker buildings at 88-96 Vesper Street.

While most buildings from this turn-of-the-century period of construction are Queen Anne or Colonial Revival, there are other styles present on Munjoy Hill as well, including Folk Victorian, the Shingle Style and Beaux Arts Style.

Folk Victorian architecture has simple detailing inspired by Italianate and Queen Anne Styles. The small home at 100 North Street (1873) has a simple gable roof form, a jig saw cut balustrade, and brackets window hoods typical of the Folk Victorian style.

Architecture



The Emma Fuller House (1892 at 50 Morning Street.



The Emerson School under construction in 1898, above. Collections of the Maine Historical Society, MMN 20355. The Emerson School today, below.



The Emma Fuller House (1892) at 50 Morning Street is a Queen Anne dwelling that exhibits some characteristics of the Shingle Style, including its strip of three windows in the front gable end, shingled pent roof, and shingle clad brackets supporting the projecting gable end.

The Henry F. Merrill House (1898) at 5 Eastern Promenade was designed by John C. Stevens and John H. Stevens. Colonial Revival in style, it also has elements found in the Shingle Style, including the recessed shingle window in the gable bay, the Palladian window, and the shingled exterior siding that unifies the irregular form of the house. Its porch with Ionic columns and decorative cornice detailing are typical Colonial Revival details.

Although not a dwelling, the Emerson School at 13 Emerson Street is an example of the Beaux Arts Style. Built 1897-1898, it was designed by Frederick Thompson in the Beaux Arts Style as an elementary school serving the Munjoy Hill neighborhood.

The Munjoy Hill neighborhood includes many triple decker apartment buildings. The triple decker is a residential building type that provided a greater number of units than early examples of multi-family housing on Munjoy Hill. It proved to be a critically important housing type to provide for Portland's growing population at the turn of the century. The building form is generally three stories high with one family unit on each floor, usually with a rear porch.

One street largely defined by its row of triple-deckers is Vesper Street. The land on Vesper Street wasn't developed until the late 1880s after being owned for many years by the Deering family. Enoch Richards, a prolific builder on Munjoy Hill, built five triple-deckers on the west side of Vesper Street 1896-1899.



An Italianate Triple Decker Building at 101 North Street



An example of the shingle bay form of triple decker buildings.



This apartment building on Morning Street has a similar form and features to a triple decker building, but has a single building entrance.

One of the most ornate triple-deckers on Munjoy Hill is located at 101 North Street. It was built in 1887 by Moses Gould, a prominent real estate developer who lived at 79 North Street. A similar triple-decker, but somewhat altered, is located at 98 Cumberland Avenue, near the Hill's only four -decker at 106 Cumberland Avenue and a brick triple-decker at 102 Cumberland Avenue.

The triple decker at 82 Beckett Street is a good example of a shingled bay style with a bracketed cornice and Italianate details. Particularly striking is its unusual curved brackets at the entry door. It was built in 1891 by Charles W. Cushing, a carpenter who lived at 87 Munjoy Street.

The Colonial Revival triple-decker at 129 Morning Street has a curved three-story bay, unusual on Munjoy Hill where most bays are segmented. The dwelling was built in 1908 for Edward L. Dame, who also owned the more traditional triple-decker next door at 125 Morning Street.

The triple decker is a more dense form of housing than early examples of multi-family housing that was built on Munjoy Hill. It was critical to house Portland's growing population at the turn of the century. In addition, the development of multi-family apartment buildings allowed for greater density in the neighborhood and accommodation for lower middle class residents. One example of a large apartment block is the building at 119 Morning Street, built circa 1926 for the Albert family and formerly known as the "Cleevesland".

The brick apartment building at 55-57 Morning Street, formerly known as the "Raymond Apartments" is an example of a housing type built to accommodate a greater number of units than the multi-family residences and triple deckers on Munjoy Hill. It was built c1912 for Samuel D Plummer and owned for many years by his family. Samuel D Plummer (1858-1917) was a real estate dealer who lived in a Queen Anne house at 140 Eastern Prom in 1898 on land he bought from the Deering heirs in 1897. He later built two apartment buildings at the rear of his house on Morning Street on the remainder of the land he purchased from the Deering family.

Visual Character of the Hill



Munjoy Hill is largely a neighborhood of wood framed dwellings.



Gables, bay windows, and raised stoops are common.



On many blocks, narrow lots contribute to a consistent streetscape.

Although Munjoy Hill exhibits a variety of architectural styles and residential building types, including single-family, multi-family, triple decker and the occasional apartment building, there are a number of shared building characteristics that serve to unify much of the neighborhood and give it its own identifiable visual character.

First and foremost, the neighborhood is distinguished by its dense development pattern. Buildings occupy narrow, deep lots and are closely spaced. With few exceptions, mostly on the Eastern Promenade, buildings are of modest scale, ranging from 1 ½ to 3 stories. Most dwellings are wood-frame construction with clapboard exteriors; the occasional brick building breaks this predominate material palette. Buildings generally have small footprints, with their narrow, usually gable, end facing the street. Most houses are two or three bays wide, often with a projecting one- or two-story front bay. Projecting front entry vestibules are also common.

Most houses sit above a high brick foundation, with a raised stoop and flight of exterior stairs leading to the main entry. Entries are typically located on the street façade and are generally shifted to one side, although there are examples of primary entrances on the side elevation. Most buildings are set back a short distance from the sidewalk, allowing for a shallow front yard. Driveways, where they exist, occupy much of the width of the lot's side yard.

Just as the scale of houses on Munjoy Hill is generally modest, so too is the architecture. Most of the houses, with the exception of those facing the Eastern Promenade, are vernacular expressions of the various architectural styles popular at the time of their construction. The very large number of Italianate buildings throughout the neighborhood, with their tall vertical expression, gable end facing the street, bracketed entry hood, and projecting bays, lends a certain consistency to the blocks.

Visual Character of the Hill



Unique porch details can differentiate a typical gable front dwelling from its neighbors.



Vernacular dwellings often feature a few character defining details, like a entry hood or tall narrow windows, that help identify these dwellings as Italianate.



Streetscapes like this on North Street, depict the typical rhythm created by vertically orientated facades .

Color photography by Greater Portland Landmarks

Certainly, there are some blocks within the neighborhood (Moody Street, for example) that do not follow this typical development pattern. There are also houses that do not exhibit the common building characteristics described above. These are, however, exceptions rather than the rule on Munjoy Hill. That is why later developments such as MacArthur Gardens, which features several separate-but-related brick buildings set back from the street within a campus-like setting, do not feel sufficiently integrated with the neighborhood.

Munjoy Hill is often described as "friendly" and "approachable". While there are no doubt many factors that contribute to this reputation, the neighborhood's distinct visual character is key among them.

List of Properties within the Proposed Munjoy Hill Historic District

Property Address	Classification
2 Atlantic Street	Contributing
6 Atlantic Street	Contributing
7 Atlantic Street	Non Contributing
12 Atlantic Street	Contributing
13 Atlantic Street	Contributing
16 Atlantic Street	Contributing
17 Atlantic Street	Contributing
18-20 Atlantic Street	Contributing
19 Atlantic Street	Contributing
22 Atlantic Street	Contributing
23 Atlantic Street	Contributing
28 Atlantic Street	Contributing
29 Atlantic Street	Contributing
34-26 Atlantic Street	Contributing
33 Atlantic Street	Non Contributing
37 Atlantic Street	Contributing
41 Atlantic Street	Contributing
42 Atlantic Street	Non Contributing
48 Atlantic Street	Contributing
52 Atlantic Street	Contributing
55 Atlantic Street	Contributing
58 Atlantic Street	Contributing
62 Atlantic Street	Contributing
63 Atlantic Street	Contributing
67 Atlantic Street	Contributing
68 Atlantic Street	Non Contributing
69 Atlantic Street	Contributing
73 Atlantic Street	Contributing
74 Atlantic Street	Contributing
75 Atlantic Street	Contributing
76 Atlantic Street	Contributing
71 Beckett Street	Contributing
75 Beckett Street	Contributing
76 Beckett Street	Contributing
81 Beckett Street	Contributing

82 Beckett Street	Contributing
83 Beckett Street	Contributing
84 Beckett Street	Contributing
85 Beckett Street	Contributing
86 Beckett Street	Contributing
87 Beckett Street	Contributing
88 Beckett Street	Contributing
91 Beckett Street	Contributing
94 Beckett Street	Contributing
95 Beckett Street	Contributing
98 Beckett Street	Contributing
99 Beckett Street	Contributing
25 Congress Street	Non Contributing
32 Congress Street	Contributing
33 Congress Street	Contributing
34 Congress Street	Contributing
35 Congress Street	Contributing
39 Congress Street	Contributing
43 Congress Street	Contributing
44 Congress Street	Non Contributing
45-47 Congress Street	Contributing
46 Congress Street	Contributing
48 Congress Street	Contributing
51-53 Congress Street	Contributing
52 Congress Street	Contributing
56 Congress Street	Contributing
58 Congress Street	Contributing
67 Congress Street	Contributing
73 Congress Street	Contributing
103 Congress Street	Landmark
127-129 Congress Street	Contributing
134 Congress Street	Non Contributing
135 Congress Street	Non Contributing
138 Congress Street	Landmark
140 Congress Street	Contributing (House at Rear)
	Non Contributing (Church)
141 Congress Street	Contributing

146 Congress Street	Contributing
147 Congress Street	Landmark
150 Congress Street	Contributing
151-153 Congress Street	Contributing
155 Congress Street	Contributing
157 Congress Street	Contributing
159 Congress Street	Contributing
161 Congress Street	Contributing
165-167 Congress Street	Contributing
5 Eastern Prom	Contributing
6 Eastern Prom	Contributing
13 Rear Eastern Prom	Contributing
17 Eastern Prom	Contributing
19 Eastern Prom	Contributing
21 Eastern Prom	Contributing
22 Eastern Prom	Contributing
28-30 Eastern Prom	Contributing
38-40 Eastern Prom	Contributing
46 Eastern Prom	Contributing
54 Eastern Prom	Contributing
60 Eastern Prom	Non Contributing
64 Eastern Prom	Contributing
84 Eastern Prom	Contributing
102 Eastern Prom	Contributing
108 Eastern Prom	Contributing
114 Eastern Prom	Contributing
118 Eastern Prom	Contributing
126 Eastern Prom	Contributing
130 Eastern Prom	Non Contributing
140 Eastern Prom	Contributing
150 Eastern Prom	Contributing
158-162 Eastern Prom	Non Contributing
164 Eastern Prom	Contributing
166-168 Eastern Prom	Contributing
172-174 Eastern Prom	Contributing
176 Eastern Prom	Contributing
182 Eastern Prom	Non Contributing

188 Eastern Prom	Contributing
208 Eastern Prom	Contributing
214 Eastern Prom	Contributing
218 Eastern Prom	Contributing
222 Eastern Prom	Contributing
13 Emerson Street	Landmark
7 Gilbert Lane	Non Contributing
9 Howard Street	Contributing
10 Howard Street	Contributing
12 Howard Street	Contributing
13 Howard Street	Contributing
15 Howard Street	Contributing
18 Howard Street	Contributing
19 Howard Street	Contributing
20 Howard Street	Contributing
21 Howard Street	Contributing
22 Howard Street	Contributing
25 Howard Street	Contributing
51-53 Kellogg Street	Contributing
55-57 Kellogg Street	Non Contributing
60 Kellogg Street	Contributing
61 Kellogg Street	Contributing
63 Kellogg Street	Contributing
64 Kellogg Street	Contributing
66 Kellogg Street	Contributing
7 Lafayette Street	Contributing
26 Lafayette Street	Contributing
30 Lafayette Street	Contributing
34 Lafayette Street	Non Contributing
42 Lafayette Street	Contributing
46 Lafayette Street	Contributing
48 Lafayette Street	Contributing
50 Lafayette Street	Contributing
56 Lafayette Street	Contributing
51 Melbourne Street	Non Contributing
52 Melbourne Street	Contributing
53 Melbourne Street	Contributing

57 Melbourne Street	Contributing
58 Melbourne Street	Contributing
61 Melbourne Street	Contributing
62 Melbourne Street	Contributing
63 Melbourne Street	Contributing
64 Melbourne Street	Contributing
67 Melbourne Street	Contributing
71 Melbourne Street	Contributing
72 Melbourne Street	Contributing
73 Melbourne Street	Contributing
74 Melbourne Street	Contributing
76 Melbourne Street	Contributing
80 Melbourne Street	Contributing
65 Merrill Street	Contributing
67 Merrill Street	Contributing
69 Merrill Street	Contributing
73 Merrill Street	Contributing
8-12 Montreal Street	Individually Designated Landmark
41 Montreal Street	Contributing
42 Montreal Street	Contributing
45 Montreal Street	Contributing
46 Montreal Street	Contributing
48 Montreal Street	Contributing
49 Montreal Street	Contributing
52 Montreal Street	Contributing
54 Montreal Street	Non Contributing
55 Montreal Street	Contributing
60 Montreal Street	Contributing
63 Montreal Street	Contributing
64 Montreal Street	Contributing
44 Monument Street	Contributing
48 Monument Street	Contributing
51 Monument Street	Individually Designated Landmark
9 Moody Street	Non Contributing
53-55 and 57-59 Moody Street	Contributing
52-54 and 56-58 Moody Street	Contributing
10 Morning Street	Contributing

11-13 Morning Street	Contributing
16 Morning Street	Non Contributing
17 Morning Street	Contributing
19-21 Morning Street	Contributing
20 Morning Street	Contributing
24 Morning Street	Contributing
25 Morning Street	Contributing
27 Morning Street	Contributing
28 Morning Street	Contributing
29 Morning Street	Contributing
32 Morning Street	Contributing
33 Morning Street	Contributing
36 Morning Street	Contributing
37 Morning Street	Contributing
40 Morning Street	Contributing
42 Morning Street	Contributing
46-48 Morning Street	Non Contributing
40-51 Morning Street	Contributing
50 Morning Street	Contributing
55 Morning Street	Contributing
58 Morning Street	Non Contributing
62 Morning Street	Contributing
63-65 Morning Street	Contributing (Original Structure) Non Contributing (Addition)
64-66 Morning Street	Contributing
68-70 Morning Street	Contributing
72 Morning Street	Contributing
76 Morning Street	Contributing
79 Morning Street	Non Contributing
80 Morning Street	Contributing
81 Morning Street	Contributing
85 Morning Street	Contributing
86 Morning Street	Contributing
89 Morning Street	Contributing
90 Morning Street	Contributing
93 Morning Street	Contributing
94 Morning Street	Contributing

95 Morning Street	Contributing
96 Morning Street	Contributing
102 Morning Street	Contributing
119 Morning Street	Contributing
125 Morning Street	Contributing
129 Morning Street	Contributing
131 Morning Street	Contributing
10 Munjoy Street	Contributing
11 Munjoy Street	Contributing
14 Munjoy Street	Contributing
15 Munjoy Street	Non Contributing
18-20 Munjoy Street	Contributing
19 Munjoy Street	Contributing
26 Munjoy Street	Contributing
27 Munjoy Street	Contributing
29 Munjoy Street	Contributing
30 Munjoy Street	Contributing
34 Munjoy Street	Non Contributing
38 Munjoy Street	Non Contributing
39 Munjoy Street	Non Contributing
42 Munjoy Street	Contributing
43 Munjoy Street	Contributing
60 Munjoy Street	Contributing
62 Munjoy Street	Contributing
66 Munjoy Street	Contributing
72 Munjoy Street	Non Contributing
76 Munjoy Street	Contributing
7 North Street	Contributing
9 North Street/28 Cumberland Ave.	Contributing
11 North Street	Contributing
12 North Street	Contributing
15 North Street	Contributing
14-16 North Street	Contributing
18 North Street	Contributing
19 North Street	Contributing
23 North Street	Contributing
24-26 North Street	Contributing

27 North Street	Contributing
28 North Street	Contributing
29 North Street	Contributing
31 North Street	Contributing
32 North Street	Contributing
34 North Street	Contributing
35 North Street	Contributing
36 North Street	Non Contributing
39 North Street	Contributing
42 North Street	Contributing
44 North Street	Non Contributing
45 North Street	Contributing
47 North Street	Contributing
48 North Street	Contributing
51 North Street	Contributing
54 North Street	Contributing
56-60 North Street	Landmark
63 North Street	Contributing
67 North Street	Contributing
73 North Street	Non Contributing
79 North Street	Contributing
80 North Street	Contributing
84 North Street	Contributing
89 North Street	Contributing
92 North Street	Non Contributing
96 North Street	Contributing
100 North Street	Contributing
101 North Street	Contributing
103 North Street	Contributing
104 North Street	Non Contributing
105 North Street	Contributing
106 North Street	Contributing
107 North Street	Contributing
110 North Street	Contributing
116 North Street	Non Contributing
122 North Street	Contributing
11 O'Brion Street	Contributing

12 O'Brion Street	Contributing
15 O'Brion Street	Contributing (Garage on Adjoining Lot Non Contributing)
16 O'Brion Street	Contributing
22 O'Brion Street	Contributing
27 O'Brion Street	Contributing
28 O'Brion Street	Contributing
30 O'Brion Street	contributing
31 O'Brion Street	Contributing (Outbuilding Non Contributing)
33 O'Brion Street	Contributing
36 O'Brion Street	Non Contributing
39 O'Brion Street	Contributing
40 O'Brion Street	contributing
42 O'Brion Street	Non Contributing
43 O'Brion Street	Contributing
45 O'Brion Street	Contributing
49 O'Brion Street	Contributing
65-67 Quebec Street	Contributing
71 Quebec Street	Non Contributing
75 Quebec Street	Non Contributing
77 Quebec Street	Non Contributing
80 Quebec Street	Contributing
81 Quebec Street	Contributing
84 Quebec Street	Contributing
86 Quebec Street	Contributing
90 Quebec Street	Contributing
8 Sherbrooke Street	Contributing
21 Sheridan Street	Landmark
16 St. Lawrence Street	Contributing
20 St. Lawrence Street	Contributing
23 St. Lawrence Street	Contributing
24 St. Lawrence Street	Contributing
28 St. Lawrence Street	Contributing
29 St. Lawrence Street	Contributing
35 St. Lawrence Street	Contributing
36 St. Lawrence Street	Contributing

37 St. Lawrence Street	Contributing
40 St. Lawrence Street	Non Contributing
43 St. Lawrence Street	Contributing
46 St. Lawrence Street	Non Contributing
47 St. Lawrence Street	Contributing
49 St. Lawrence Street	Contributing
50 St. Lawrence Street	Contributing
52 St. Lawrence Street	Contributing
56 St. Lawrence Street	Contributing
57 St. Lawrence Street	Contributing
61 St. Lawrence Street	Contributing
62 St. Lawrence Street	Contributing
65 St. Lawrence Street	Contributing
71 St. Lawrence Street	Non Contributing
72 St. Lawrence Street	Contributing
74 St. Lawrence Street	Contributing
75-77 St. Lawrence Street	Non Contributing
83 St. Lawrence Street	Contributing
87 St. Lawrence Street	Contributing
91 St. Lawrence Street	Contributing
94-96 St. Lawrence Street	Contributing
50 Turner Street	Contributing
52 Turner Street	Contributing
11 Vesper Street	Contributing
12 Vesper Street	Non Contributing
15 Vesper Street	Contributing
16 Vesper Street	Contributing
19 Vesper Street	Contributing
20 Vesper Street	Contributing
22 Vesper Street	Contributing
23 Vesper Street	Contributing
27 Vesper Street	Contributing
28 Vesper Street	Contributing
31 Vesper Street	Contributing
30-32 Vesper Street	Contributing
33 Vesper Street	Contributing
36 Vesper Street	Contributing

38 Vesper Street	Contributing
39 Vesper Street	Contributing
41 Vesper Street	Contributing
42 Vesper Street	Non Contributing
46 Vesper Street	Contributing
47 Vesper Street	Contributing
50 Vesper Street	Contributing
73 Vesper Street	Contributing
74 Vesper Street	Non Contributing
76 Vesper Street	Contributing
77 Vesper Street	Contributing
79 Vesper Street	Contributing
80 Vesper Street	Contributing
82 Vesper Street	Contributing
83 Vesper Street	Contributing
85 Vesper Street	Contributing
86 Vesper Street	Contributing
89 Vesper Street	Contributing
90 Vesper Street	Contributing
92 Vesper Street	Contributing
93 Vesper Street	Contributing
96 Vesper Street	Contributing
42 Walnut Street	Non Contributing
44 Walnut Street	Non Contributing
46 Walnut Street	Contributing
54 Walnut Street	Contributing
17 Waterville Street	Contributing
23-25 Waterville Street	Contributing
29 Waterville Street	Non Contributing
39 Waterville Street	Contributing
40 Waterville Street	Contributing
41 Waterville Street	Contributing
44 Waterville Street	Contributing
45 Waterville Street	Contributing
46 Waterville Street	Contributing
50 Waterville Street	Contributing
51 Waterville Street	Contributing

54 Waterville Street	Contributing
56 Waterville Street	Contributing
62 Waterville Street	Contributing
65 Waterville Street	Contributing
66 Waterville Street	Contributing
70 Waterville Street	Contributing
72 Waterville Street	Contributing
73 Waterville Street	Contributing
10 Willis Street	Contributing
20 Willis Street	Contributing
22 Willis Street	Non Contributing
24 Willis Street	Contributing
26 Willis Street	Contributing
14-16 Wilson Street	Contributing
27 Wilson Street	Contributing
29 Wilson Street	Contributing
32 Wilson Street	Contributing
56 Wilson Street	Non Contributing
58 Wilson Street	Contributing
61-65 Wilson Street	Contributing
74 Wilson Street	Non Contributing
76 Wilson Street	Contributing
80 Wilson Street	Contributing

Address: 21 Sheridan Street
Approximate/Documented Date of Building: 1903
Surveyed: 8/17/2018
Historic Name: John Ford boyhood home
Landmark, Contributing or Noncontributing: Landmark

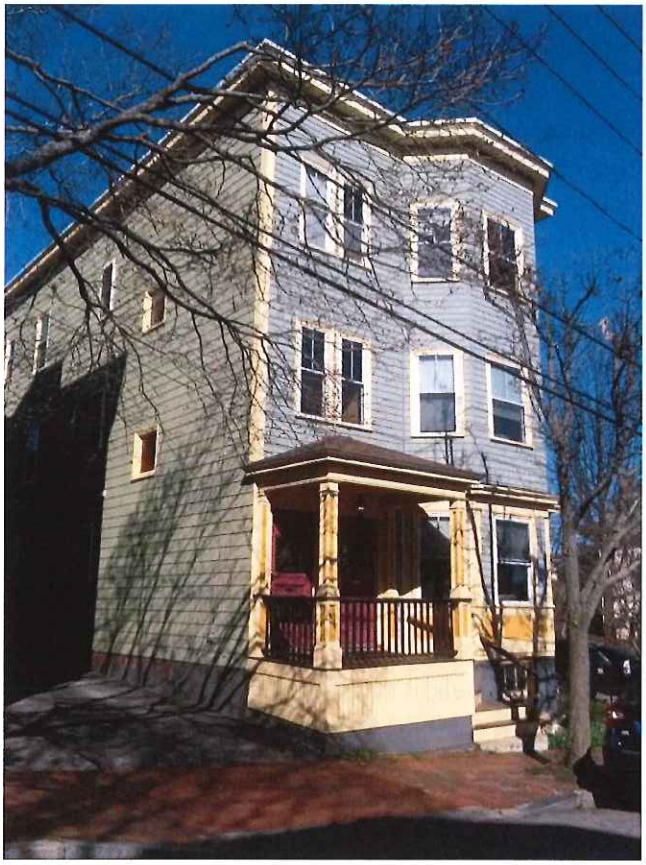



Introduction

21-23 Sheridan Street was a boyhood home of John Ford. The noted movie director was born John Feeney at Cape Elizabeth. In 1897 the family moved to Portland and a series of rental accommodations, first at Danforth Street and then at 65 Monument. In 1905 the family moved to this triple decker on Sheridan and lived there until 1917. John was a football hero at Portland High School and in 1914 followed his brother Francis to Hollywood. The Feeney brothers changed their name to Ford and John went on to direct such classic films as " The Informer" (1936) "Stagecoach" (1939), "The Grapes of Wrath" (1940), and "The Searchers" (1956). The building's Landmark classification is based on its association with John Ford.

The building is a classic triple-decker built in 1903. Triple deckers were built in significant numbers on Munjoy Hill at the turn of the twentieth century and proved to be an important building type in providing affordable housing for Portland's growing population, especially immigrant population. Triple deckers allowed for higher density on a narrow building lot. While accommodating a greater number of units, the triple decker also offered numerous amenities such as a generous floor plan, projecting bays, large windows and, oftentimes, decks for each unit. (From the 1924 photo, it appears the 21-23 Sheridan did not include decks.)

21-23 Sheridan exhibits all the typical elements associated with this building type: a tall, narrow building form; a front porch supported by columns and positioned at the side of the façade; a large faceted bay window that extends the full height of the building; a deep overhanging cornice and generous-size windows. Given the fairly steep grade of Sheridan Street and the building's high foundation, the front porch is located well above the street and is accessed by winding steps.

Alterations and Additions since 1924

21-23 Sheridan remains in well-preserved condition. Although some architectural details are difficult to discern from the 1924 photo, it appears that many of the original details remain. These include the recessed panels at the base of the front bay, the pilasters flanking the bay windows, the front porch's square columns with recessed panels, and the denticulated cornice. Windows remain 2-over-one, however at least some of the windows are vinyl replacements.

Some changes are evident. For example, on the south elevation the single windows near the front corner of the building are now paired. More obvious is the addition of a three-level porch off the south elevation. Interestingly, the porch addition is consistent with what many triple-deckers featured as amenities when they were built. The changes are compatible with the original character of the building and do not diminish its historic integrity.

Address: 60 Montreal Street
Approximate/Documented Date of Building:
Surveyed: 8/17/2018
Historic Name:
Contributing or Noncontributing: Contributing



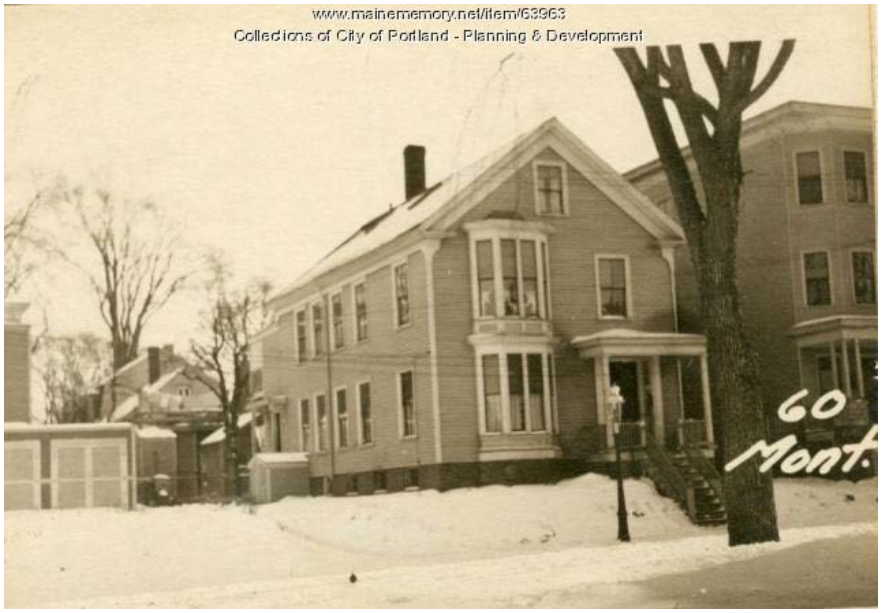

Introduction
60 Montreal Street is a vernacular Italianate dwelling, and is a good example of the many gable-front houses built on the narrow lots that typify Munjoy Hill's historic character. Distinguishing characteristics include eave returns, wide friezes, corner boards, and the façade's two-story canted bay window and recessed main entrance with partial porch.

The dwelling is two by five bays wide, with fewer bays on the southern elevation, and has vinyl siding and replacement 1/1 vinyl sash windows. The façade's bay window retains cornices on both stories. The entry porch in the second bay has tapered column supports and dentil moldings. The recessed, double-door main entry has a simple entablature with wooden paneling on the interior walls. The northern elevation has a secondary entrance in the first bay, which appears to have a bracketed hood, although it is partially obscured from the roadway by trees.

A shed dormer with three vinyl sliding windows runs the full width of the roof's northern slope. The gabled roof is asphalt and has one chimney adjacent to the interior ridge.

Alterations and Additions Since 1924
Changes since 1924 include loss of wood clapboard siding, the addition of 1/1 windows in place of 2/2 and 2/1 windows, replaced corner boards with some loss of detail, and the addition of the large shed dormer. Wooden paneling below the bay window lights has been replaced with vinyl clapboards. However, these changes do not diminish the dwelling's historic character, as it retains significant period details and its nineteenth-century form.

Address: 44 North
Approximate/Documented Date of Building: 1884
Surveyed: 8/17/2018
Historic Name: A. L. Johnson House
Contributing or Noncontributing: Noncontributing





Introduction

The multifamily residence at 44 North Street is a front-gable, two-and-a-half-story, wood-frame Italianate structure. The building is clad in natural wood clapboards with wood trim. Although the building's form and massing remain unchanged (at least near the street) and a few architectural details remain to convey its original Italianate style, the number and nature of alterations have effectively robbed the building of its historic integrity. The front entry has been altered with the replacement of the original canopy, front doors and entry porch. The prominent two-story bay has changed significantly in appearance with its windows being reduced in size and infill clapboard siding replacing the bay's decorative paneling and intermediate cornice. Other windows on the façade and side elevations have been reduced in size as well and a group of three single-lite casement windows have replaced a pair of taller windows in the front gable. A rear addition extends beyond the face of the south elevation.

While the building's form, scale and gable end-to-the-street orientation are consistent with North Street's prevailing development pattern, the degree of change has led to its classification as a noncontributing structure.

Munjoy Hill Historic District – Rationale for Delineation of Recommended Boundary

Scott T. Hanson

Sutherland Conservation & Consulting

July 2018

Munjoy Hill is a primarily residential neighborhood on the east end of the Portland peninsula that was largely developed between 1850 and 1925 to house middle-class and working-class residents. As its development was spread over a large area and a span of 75 years, several aspects or areas of historical and architectural significance are represented by the buildings in the neighborhood. Due to this development history there are concentrations of buildings related to different areas of significance and/or architectural styles. In delineating the boundary of the Munjoy Hill Historic District the range of styles, areas of significance, and concentrations of related buildings were taken into consideration, seeking to include examples of all areas of significance and architectural styles without attempting to include every example. Where there are similar concentrations of buildings with the same areas of significance and/or architectural styles, the objective was to select the representative concentration with the greatest architectural integrity that could reasonably be part of a contiguous district.

Congress Street is the "spine" of the Portland peninsula, including Munjoy Hill. As a primary transportation corridor for the neighborhood, it was the location of most commercial and institutional development on the "the hill." Several significant commercial structures remain on Congress Street and have been included in the recommended district boundary or recommended as individual landmarks. Congress Street is also the location of the Portland Observatory, the oldest and most significant structure in the neighborhood. The Observatory was built in 1808 and is a National Historic Landmark, the highest level of recognition for historic significance in the United States. The district boundary was delineated to include the buildings leading to the Observatory when traveling up Munjoy Hill in order to protect the historic context for the landmark tower. This also happens to be one of the best concentrations of residential buildings with good architectural integrity along Congress Street on the hill, making their inclusion in the district more important than other concentrations of similar buildings with less integrity on Congress Street.

There are a few buildings of high historic or architectural significance that are located outside the recommended boundary which are recommended as individual landmarks as allowed under the preservation ordinance. These are important buildings surrounded by buildings of lesser significance and/or integrity and located some distance from the contiguous concentrations of significant buildings. Individual landmark status will allow for the protection of these buildings without including significantly more non-contributing buildings in the district. These individual landmark buildings include the childhood home of noted Hollywood movie director John Ford, early 20th century triple-decker at 21-23 Sheridan Street, and the Munjoy Block, an architecturally significant 1887 mixed use commercial and residential structure with a high degree of integrity, located at 101-107 Congress Street.

Portland's Historic Preservation Ordinance includes a provision that requires a lesser level of review by the Historic Preservation Board for new construction within 100-feet of a district boundary. This provision was waived for the India Street district when it was created in 2015. The boundary delineation recommended for the Munjoy Hill Historic District is based upon the assumption that the "100-foot rule" will apply in this new district. The rule ensures that if buildings are torn down and replaced at the edges of the district the new buildings will be respectful of the scale and character of the abutting district. If the rule were to be waived for this district, the recommended boundaries should be increased to include abutting buildings of the same period but which have lost architectural integrity. This would be for the same purpose – to ensure that the transition into the district is respectful of scale and character of the building with more integrity.

Areas of Significance Considered in Delineating the Boundary:

Atlantic and St. Lawrence RR and the Portland Company

Few events in Portland's history were more significant than the establishment of the Atlantic and St. Lawrence (later Grand Trunk) Railroad and the related Portland Company to manufacture steam locomotives. The railroad made Portland the winter port for Canada and provided a solid economic foundation for the Victorian prosperity that allowed the city to construct Commercial Street and a modern seaport infrastructure in the 1850's and then to rapidly rebuild and expand after the Great Fire of 1866. The development of the Atlantic and St. Lawrence Railroad and the Portland Company on filled land below Munjoy Hill led to the first significant residential development on the south slope of the hill above the Portland Company. The relationship between the arrival of the railroad and the development of houses nearby is clearly reflected in the names of Atlantic Street and St. Lawrence Street, two of the streets laid out and developed at the time the railroad and Portland Company were being established. Census records and city directories from 1850 into the twentieth century document that many of the residents of these streets and others in the area worked for one of these two entities. The houses built in response to the railroad and Portland Company represent the greatest concentration of pre-Great Fire development on Munjoy Hill and also the greatest concentration of Greek Revival style houses. As Greek Revival style houses they have particular relevance as surviving examples of the style in Portland, where hundreds of examples were lost to the Great Fire of the 1860's and to Urban Renewal projects of the 1950's and 1960's.

Great Fire of 1866

Although the Great Fire of 1866 barely touched the areas being recommended for inclusion in the Munjoy Hill Historic District, it greatly influenced the development of much of the district. Ten thousand Portland residents were made homeless by the fire that destroyed the historic core of the city. It was possibly the single most significant event in the creation of the city of Portland as it exists today. In addition to being the catalyst for construction of the Victorian era Old Port, the fire provided the impetus for the development of residential buildings on both Munjoy Hill and the West End. Large areas of Munjoy Hill that had previously been open fields were subdivided and built upon. This development

typically reflected the popular styles of the period, particularly the Italianate and Second Empire styles, leaving concentrations of houses in these styles.

African American Residents

The history of Portland's African-American residents is less well known than that of many other ethnic groups. The city's population has included people of African descent since the Colonial era and during the nineteenth century there were several areas with concentrations of black residents, including a portion of Lafayette Street on Munjoy Hill. Several of these modest homes that retain a fair to good degree of integrity to the nineteenth century have been included in the district to reflect the significance of this often-overlooked aspect of the city's history.

Late 19th and Early 20th Century European Immigrants

As Portland's population swelled with immigrants from southern and central Europe in the late nineteenth and early twentieth century, the triple-decker tenement buildings built in large numbers during the period provided housing for many of them. Often owner-occupied, the rents from tenants (often extended family members) allowed people of modest means to own their homes. As a type, triple-deckers were primarily an urban New England building form that was often ornamented with Queen Anne or Colonial Revival style detailing but could also be very simple and vernacular in architectural expression. The greatest concentrations of triple-deckers on Munjoy Hill are in the areas not developed until the beginning of the twentieth century, such as Morning and Vesper streets. The boundary has been delineated to include the group of these buildings retaining the highest degree of integrity.

The Eastern Promenade

Although the Eastern Promenade itself is already a designated historic landscape district, the houses built along Eastern Promenade are not included in that district. They reflect the appreciation for public landscapes and vistas that developed in the United States in the late nineteenth century. The relatively late development period for both the Eastern and Western Promenades in Portland (primarily 1890's though 1920's) documents how little appreciation of scenic views there was prior to that period. In general, the houses built on sites overlooking the Promenade are larger and grander than the majority of the houses built on Munjoy Hill. While a few of them could be considered mansions, the majority were large upper-middle-class single-family homes – mostly less grand than those on the Western Promenade. Many of the most architecturally significant homes on Munjoy Hill are located on the Prom and are included within the boundary due to that significance.

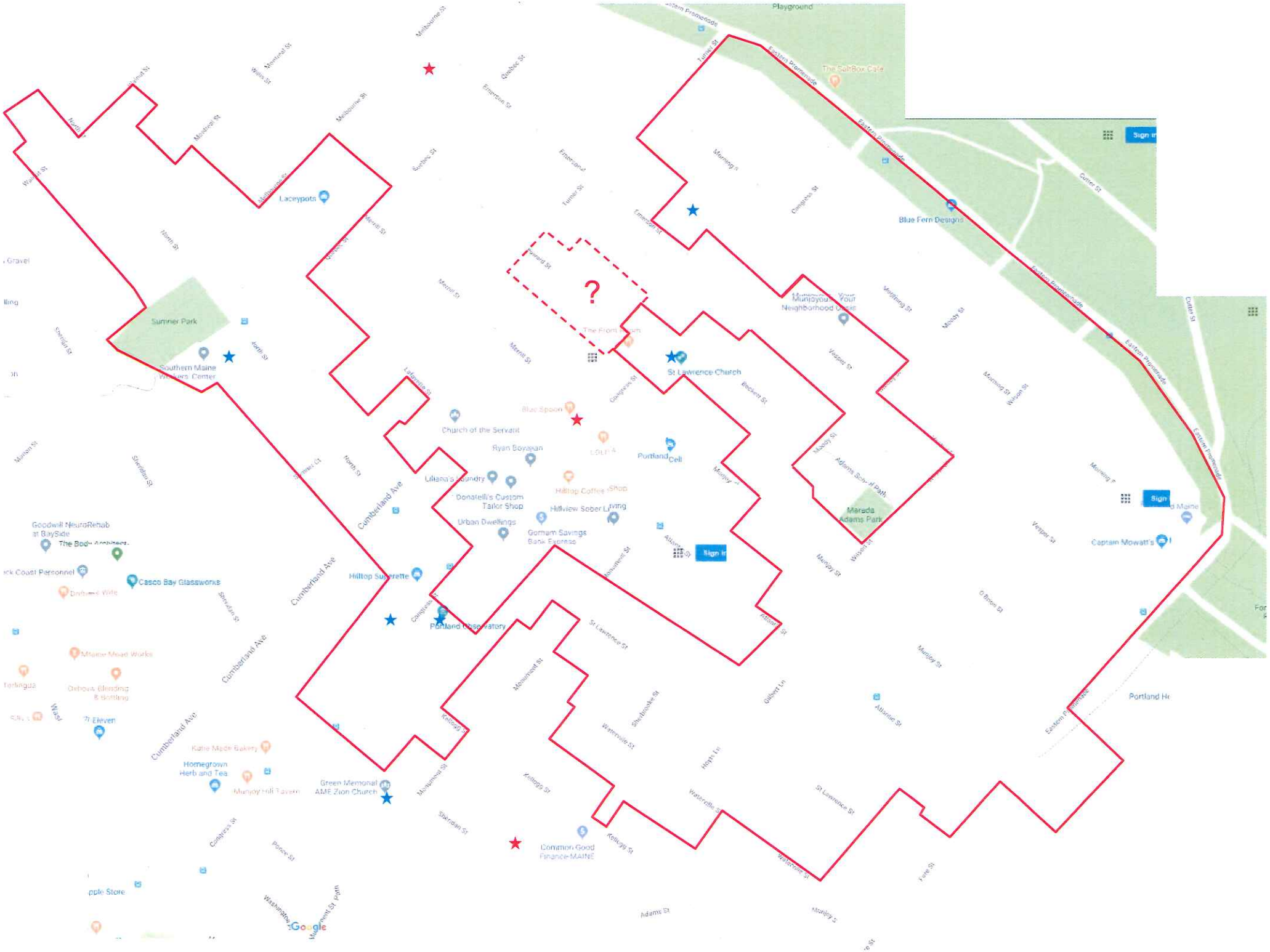
Playground
The SaltBox Cafe
Blue Fern Designs
Munjoy Neighborhood Center
St Lawrence Church
Laceypots
Summer Park
Southern Maine Veterans Center
Blue Spoon
Church of the Servant
Ryan Boyajian
Portland Cell
Liliana's Laundry
Donatelli's Custom Tailor Shop
Urban Dwellings
Gorham Savings Bank Express
Hilltop Coffee Shop
Hillview Sober Living
Hilltop Superette
Portland Observatory
Merads Adams Park
Captain Mowatt's
Goodwill NeuroRehab at BaySide
Casco Bay Glassworks
Maine Mead Works
Oxbow Blending & Bottling
7 Eleven
Katie Made Bakery
Homegrown Herb and Tea
Munjoy Hill Tavern
Green Memorial AME Zion Church
Common Good Finance MAINE
Cumberland Ave
Congress St
St Lawrence St
Monument St
Munjoy St
Adams St
Kellogg St
Waterville St
Sheridan St
Portland Ho
Google

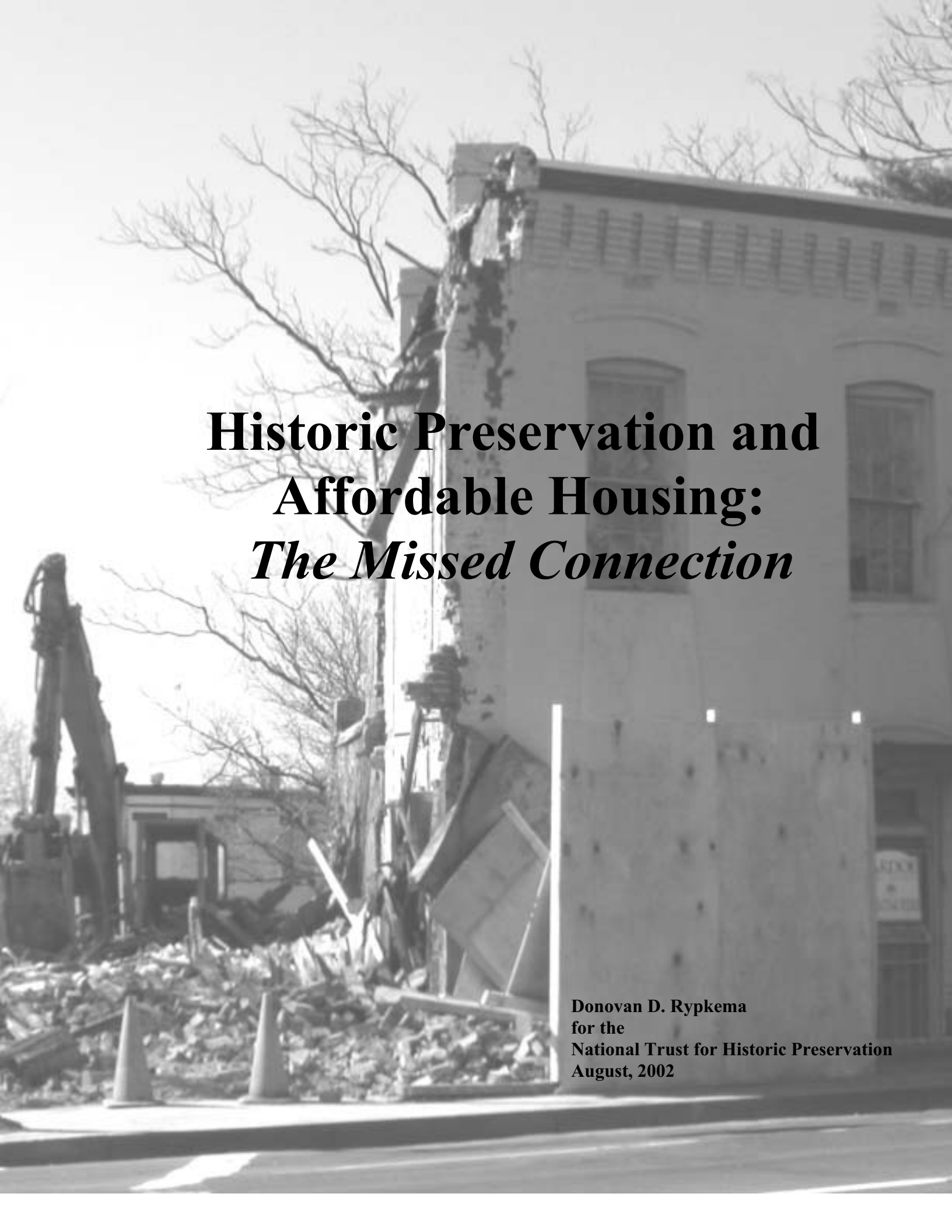

Historic Preservation and Affordable Housing: *The Missed Connection*

Donovan D. Rypkema
for the
National Trust for Historic Preservation
August, 2002

There is a crisis in housing in the United States

Headlines herald new levels of homeownership in America – recently reaching 68 percent. And that is indeed reason to celebrate. The National Association of Home Builders proclaims that the United States is the best housed country in the world – and they are no doubt correct.

But beneath the celebratory headlines another story is emerging – the story of a prosperous nation that is not meeting the housing needs of far too many of its citizens.

Voices are beginning to be heard on this other story – from real estate organizations to low income housing advocates, from columnists to business groups, from Mayors to the White House. There are a variety of identified causes and an assortment of proposed solutions, but there is one consistent description of the problem – *Crisis.*

> *America is facing a silent housing affordability crisis*.[i]
> National Association of Home Builders
>
> *Rental Housing Assistance – The Worsening Crisis*[ii]
> U.S. Department of Housing and Urban Development
>
> *We have reached a point of crisis that will be solved only with sustained and dramatic action*.[iii]
> National Low Income Housing Coalition
>
> *Despite our nation's unprecedented economic prosperity, there is a continuing, growing crisis in housing affordability and ownership that is gripping our nation.*[iv]
> National Association of Realtors
>
> *Housing crisis worsens as construction lags demand* [v]
> USA Today
>
> *This is an American crisis whose solution can't be postponed much longer.*[vi]
> Columnist Neal Pierce
>
> *Our nation's affordable housing crisis*.[vii]
> U.S. Conference of Mayors

Historically lack of adequate and affordable housing has been seen as essentially a social service issue – taking care of the least fortunate among us. And that portion of the affordable housing problem is increasingly desperate. Of the over twelve million Americans with worst-case needs, 1.5 million are elderly, 2 million are disabled and 4.3 million are children.[viii] The need for affordable rental housing by the poorest households exceeded the available supply by 1.8 million units in 1999.[ix]

But today the crisis in affordable housing is not confined to the poorest of the poor. Today the housing crisis affects virtually every American family because it affects our children, our parents, our employees, and our public servants.

It is not just the unemployed who are being affected. In 1999 there were 3.7 million <u>working</u> families who were paying at least 50 percent of their income for housing.[x]

Record numbers of adult children are living with their parents. Today 3.8 million adults aged 25 to 34 are living at home[xi], a pattern largely driven by rent levels too high to be affordable with their current incomes.

Nor is the problem confined to the bottom of the pay scale. Our communities cannot survive without teachers or police officers or nurses. But in two-thirds of metropolitan areas a household dependent on one teacher's or police officer's salary cannot afford to buy a median priced home, and licensed practical nurses are priced out of all but the lowest cost-to-income markets.[xii]

> *The result is that people who provide the bulk of the services in these communities – teachers, policemen, firemen, laundry and restaurant workers – cannot themselves afford to live there*[xiii].
> Center for Housing Policy

The Urban Land Institute has noted that this need for "workforce housing" is not only critical today but is growing more rapidly than the need for any other type of housing.[xiv]

While the affordable housing crisis is particularly apparent in urban areas, the problem is not confined there. Nearly 41 percent of low-to moderate-income families with critical housing needs live in the suburbs and another 16 percent live in non-metropolitan areas.[xv]

The affordable housing crisis affects renters, homeowners, and those who would like to be homeowners. In America today there are 2.3 million lowest-income households who own their home but subject to a mortgage. 73 percent of these households are paying more than half of their income for housing.[xvi] The standard for housing affordability has been generally accepted as being no more than 30 percent of income but today some 6 million families pay more than half of their income for rent.[xvii] And for those who would like to be homeowners the U.S. Conference of Mayors points out that "moderate and middle income families increasingly struggle to afford a median-priced home in more than three-quarters of our nation's largest housing markets."[xviii]

Thus affordable housing is no longer just a social service issue. It has become an issue of urban policy, of environmental protection, of community development and particularly an issue of economic development.

> *In some parts of the country where economic growth is the strongest, the labor force critical to sustaining the economy either cannot find housing that is reasonably priced or cannot locate within an appropriate commuting distance of their jobs.*[xix]
> Center for Housing Policy

> *The lack of workforce housing has become an economic development issue as corporations decide not to locate in areas where their employees cannot acquire decent, safe, and affordable housing.*[xx]
> Urban Land Institute

> *Corporate moves are prompted, as often as not, by the impact of the high cost of housing on available employees and the excessive burden commuting imposes on employees.*[xxi]
> Center for Housing Policy

So the problem of affordable housing is wide-spread geographically, concerns renters, homeowners, and potential homeowners, has adverse impacts far beyond the poorest of the poor, affects young and old, and consequently is beginning to catalyze a diverse confluence of interests.

But this diverse array of interests has also reached another conclusion: without fundamental changes in programs and policies the problem is going to get much worse in coming years.

Over the next ten years around 20 million net new jobs are going to be created in America. But nearly seven million of those jobs – 34 percent of the total – are going to pay less than $20,000 per year.[xxii] What can those seven million workers afford as rent? About $500 per month. But two-thirds of two-bedroom apartments built in 2000 rented for more than $750 per month. In fact 87 percent of those units weren't affordable to renters earning the median income, let alone a minimum wage.[xxiii] Researchers have noted that the affordability problem is particularly severe for new entrants to the workforce and those trying to get off welfare.[xxiv]

Some would argue that as America moves into the "new economy" with high tech jobs and large paychecks, the affordability problem will solve itself. Well, in the next ten years for every new job for a computer programmer we'll need 7 clerical workers; for every chemist we'll need 43 cashiers; for every operations research analyst we'll need 73 janitors.[xxv] Even today in ninety percent of the largest metropolitan areas those janitors are unable to rent a one-bedroom apartment within the range of affordability[xxvi]. When one can't afford to rent a one-bedroom apartment, the American Dream of homeownership becomes a fading mirage.

Furthermore those so-called new economy workers are driven by quality of life issues on where they want to live. Quality of life means good childcare, and childcare workers make less than $11,000 a year. Quality of life means nice restaurants – and waiters and waitresses, and we'll need 300,000 more of them over the next ten years, make $12,730. Quality of life means clean and safe buildings, which require janitors and guards and they make less than $16,000 a year.[xxvii]

Without significant program and policy changes those who will be left out in the coming years are the same groups who have been left out in the past – minorities, families with modest incomes, inner city residents, the young and new immigrants.

Homeownership is widely seen not only as the fulfillment of the American Dream, but a crucial component of building household wealth, stabilizing neighborhoods, increasing citizen participation, improved property maintenance, and revitalizing cities. There is good cause to celebrate new records of homeownership. But there is a wide divergence in who those homeowners are.

- The white, non-Hispanic homeownship rate is 73.9 percent while the black rate is 47.8 percent and the Hispanic rate is 47.5 percent[xxviii]

- The homeownership rate in the suburbs is 73.8 percent, while in the central city it is less than 50 percent.[xxix]

- Households with incomes greater than $120,000 per year have a homeownership rate of 92.3 percent while those with less than $20,000 in annual income 47.2 percent.

- In spite of the increase in overall ownership rates over the last two decades, the percentage of young families owning their own home has actually fallen from 44.7 percent in 1979 to 41.2 percent today.[xxx]

- Likewise with the immigrant population, in 1980 51.2 percent of immigrant households owned their own home but by 2000 that fraction fell to 47.4 percent.[xxxi]

Over the next two decades most of the increase in both population and in households is going to be among precisely those groups that today are being left behind in homeownership growth. An estimated 24 million households will be formed between 2000 and 2020[xxxii], and 64 percent of those will be minority households[xxxiii]. The population aged 20 to 24 will grow nearly twice as fast as the overall population in the next five years.[xxxiv] Even if the rates of immigration begin to decline as predicted, newcomers to America will constitute a third of the net growth in Hispanic households and almost two-thirds of the growth in Asian households.[xxxv] White families will make up less than 30 percent of net new homeowners in the next 20 years.[xxxvi]

President Bush has recognized this divergence and has noted, "We must begin to close this homeownership gap by dismantling the barriers that prevent minorities from owning a piece of the American dream."[xxxvii]

What are the solutions?

So can America build itself out of this housing crisis? Certainly new construction of both single-family homes and apartment houses will need to be a key component of addressing this issue. But there is one fact-of-life in real estate that must be reckoned with – you can't build new and rent (or sell) cheap – it can't be done. At least it can't be done without either massive subsidies or very low quality units. In the first half of 2002 the median new house price approached $185,000 [xxxviii], meaning it is out of reach for over 60 percent of American households. For rental housing the same problem exists. "The private sector cannot produce apartments in most areas that are affordable to households with incomes under 70 percent of area median (and sometimes even higher) without a subsidy."[xxxix]

Furthermore, when affordable housing can be built, it's often in locations that exacerbate other problems. As the Urban Land Institute's housing expert notes, "It's not how much we produce, it's where it's produced. In market after market, affordable housing is being built, but it's in the fringes. Workers are being forced to move way out, and this compounds the cycle of sprawl."[xl]

Federal Reserve official Ron Feldman has noted, "Building new housing units appears to be a relatively expensive method of providing low-cost housing compared to the alternatives."[xli]

Manufactured housing provides an affordable homeownership alternative to traditional new construction. Today, greatly improved quality and technology are increasingly strengthening the role that factory-built homes play in long-term affordable homeownership. Such innovations along with continued design advances that heighten market appeal and integrate manufactured housing with site-built homes could someday place factory-built homes on par with traditional units as a means for acquiring wealth through homeownership.

But today a sizeable percentage of "manufactured housing" is, in fact, mobile homes. Between 1997 and 1999, 72 percent of new units built within affordable price ranges were mobile homes.[xlii] As with new construction, additional mobile homes will, in some parts of the country, be an important part of the affordable housing solution. But certain other issues with mobile homes have to be considered. Two-thirds of mobile home units do not include the ownership of the land upon which they sit[xliii]. The asset building character of homeownership may be more problematic without title to the underlying real estate. The steady rise of overall homeownership in the United States has been helped immeasurably by the availability of low cost mortgage

money. That economic boon hasn't always translated to buyers of mobile homes, however. "Many recent buyers of manufactured homes – especially with the lowest incomes who had the least ability to withstand household budget shocks – pay well above the prime mortgage rate."[xliv]

Our older and historic neighborhoods

So new construction and mobile homes will be critical to addressing the affordable housing crisis in the next two decades, but clearly those are insufficient solutions given the magnitude of the problem. Where, then, can we find affordable housing? Exactly where it is being found today, in our older and historic neighborhoods.

The phrase *older and historic neighborhoods* refers to those buildings constructed prior to 1950. Certainly not every structure built before 1950 has been designated historic, and many do not merit that formal identification. However fifty years is time frame when the question, "Is it historic?" is appropriately asked. Furthermore, the historic preservation movement in recent years has moved beyond focusing on simply saving individual landmarks to being concerned, instead, with the conservation of neighborhoods. Historic preservation now encompasses more than the mansions of the rich and the homes of the famous. Historic preservation today celebrates and champions the neighborhoods, downtowns, and rural areas that are less grand architecturally, but perhaps even more significant in the building of America.

But older and historic neighborhoods contribute far more to America today than a sense of evolution and history. Older and historic neighborhoods, unlike any other areas, are providing homes for families from every financial strata, but particularly for those in need of affordable housing.

How significant are older and historic neighborhoods in providing affordable housing? Consider this:[xlv]

- 32 percent of households below the poverty line live in older and historic homes
- 31 percent of homeowners whose household income is less than $20,000 per year live in older and historic homes
- 34 percent of renters whose household income is less than $20,000 per year live in older and historic homes
- 31 percent of black homeowners and 24 percent of Hispanic homeowners live in older and historic homes
- 29 percent of elderly homeowners live in older and historic homes
- 53 percent of all owner occupied older and historic homes have monthly housing costs less than $500
- 48 percent of tenant occupied older and historic homes rent for less $500 per month

To put it another way, if today we had to replace the older and historic homes currently occupied by households below the poverty level, using the most cost-effective of Federal housing programs, it would cost American taxpayers $335 Billion. Numbers that large often lose their

meaning. How much is $335 Billion? Nearly $1,200 for every man, woman, and child in America.

Are we saving our older and historic neighborhoods?

So with the exceptional contribution not just to the culture, history, aesthetic quality and social fabric of our nation but to our desperate need for affordable housing, surely our older and historic neighborhoods are being protected and preserved, right? Unfortunately the numbers tell a different story.

In the last three decades of the 20th century we lost from our national inventory of older and historic homes 6.3 million year-round housing units![xlvi] Over 80 percent of those units were single-family residences. Now a few of those burned down or were lost to natural disasters. But the vast majority of them were consciously torn down – were thrown away as being valueless. And today millions of American families are paying the cost by paying for housing they cannot afford. Certainly not every one of those houses could or should have been saved. But if even half were retained instead of razed, the picture today would be much different for the millions of Americans inadequately or unaffordably housed.

For the last thirty years, every day, seven days a week, 52 weeks a year we have lost 577 older and historic houses. We as a nation can afford this no more. The Bipartisan Millennial Housing Commission almost got it right when they reported, "These units are disappearing at an alarming pace." But these units aren't disappearing – they are being intentionally torn down!

For our most historic houses – those built before 1920 – in just the decade of the 1990s 772,000 housing units were lost from our built national heritage. In fact we are moving backwards as we demolish a valuable part of the potential affordable housing inventory. Between 1997 and 1999 we lost over 160,000 older and historic homes. We will never address the crisis in affordable housing if this pattern is not reversed. President Bush is right – we have to dismantle the barriers to affordable homeownership. But we cannot do that if we are dismantling the very homes that could be affordable.

There is today almost universal agreement that the Urban Renewal demolition of large tracts of downtowns was misguided, self-defeating, and ultimately a failure as a revitalization strategy. The sustained success stories in downtown revitalization today are found in those cities that maintained and reinvested in their historic buildings and recognized their character, quality, and ultimate durability.

But today the same approach of wholesale destruction is being taken in neighborhoods in far too many American cities. And almost verbatim the same arguments are being made: "Those structures are about to fall down anyway." "Those old buildings don't meet the needs of today's market." "Once you fix them up you still have nothing but old buildings." "They are an eyesore and we have to get rid of them." "As soon as we tear those buildings down and have a clean site the developers will be lining up for a chance to redevelop the property." The most charitable description of those arguments from the Urban Renewal days is that they were well intended but patently wrong. When George Santayana wrote that those who cannot remember the past are condemned to repeat it, he couldn't possibly have imagined that the past would be forgotten so quickly. It is hard to conceive that cities are using what is a demonstrated failure in Urban Renewal as the strategy of choice in neighborhood renewal. It is not that no building should ever be torn down, rather that demolition should be the last resort not the first option.

Older and Historic Neighborhoods – Beyond the Architecture

Preservationists are often accused of wanting to save buildings just because they are old, of valuing aesthetics over practicality, of standing in the way of progress for the sake of a bit of history.

So let's look at older and historic neighborhoods for a moment without the lens of the educational, cultural, social, and architectural values of preservation. There is a growing recognition that the affordable housing crisis can't be addressed with just housing – it must be addressed on the neighborhood level. So instead of looking at architectural styles, let's look instead at the needs of families, particularly families of modest means, and look at the nature of the neighborhood rather than the building. Families need proximity – to work, to schools, to shopping, and to public transportation. So compare older and historic neighborhoods to new housing.

Over 40 percent of residents in older and historic neighborhoods are within five miles of work. Less than one resident in four in new housing is that close to their place of employment[xlvii]

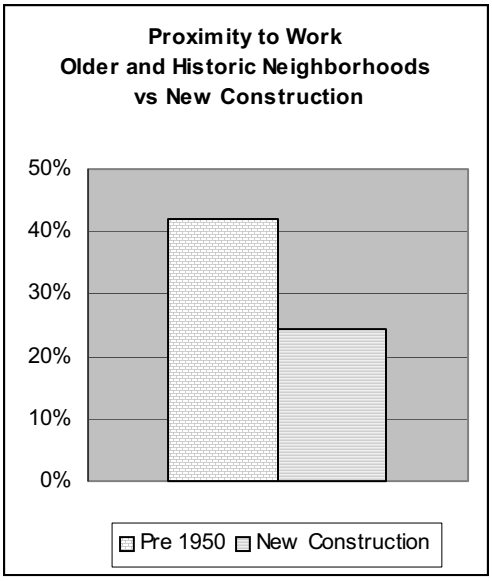

Over two-thirds of older and historic neighborhoods have an elementary school within one mile. Less than 40 percent of new construction does.

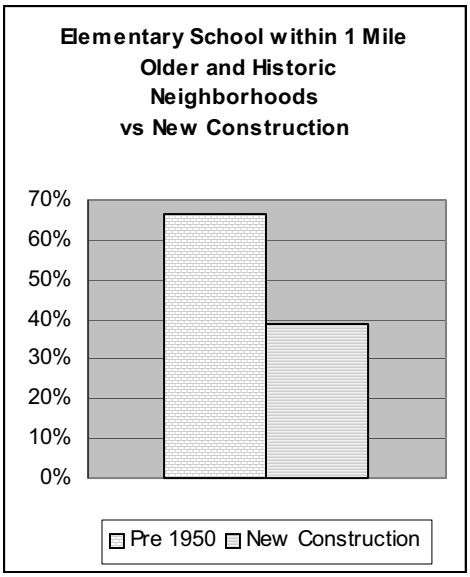

Over 60 percent of houses in older and historic neighborhoods have shopping within one mile. Barely 40 percent of new houses do.

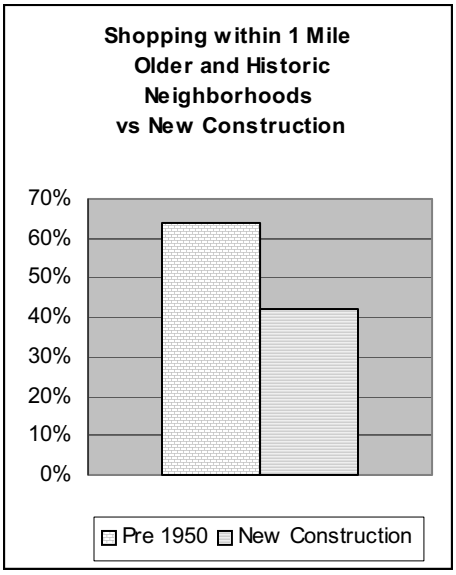

Public transportation is available to residents in nearly 60 percent of older and historic neighborhoods. Three quarters of new housing has no public transportation available nearby. Recently lenders have recognized a household can, in fact, afford “more house” than would be the case under standardized formulas when public transportation is within walking distance.

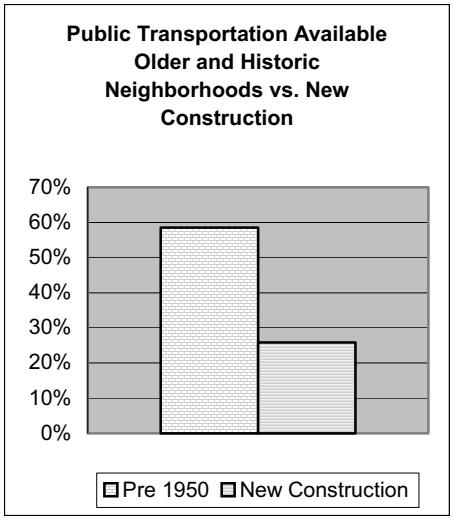

And finally returning to the critical issue of affordability compare the percent of housing under $150,000 in older and historic neighborhoods (over 70%) with the new units in that affordability range (barely half).

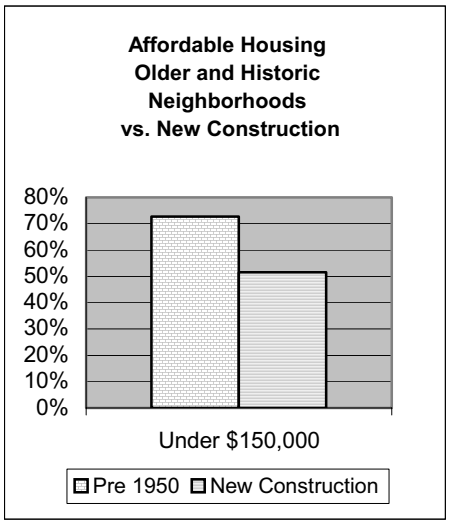

Taking Care of the Neighborhood

Public policy has not served older and historic neighborhoods well. The first step in reversing this pattern is to make the decision that "We have to destroy this neighborhood in order to save it" is no longer acceptable public policy. But stopping rampant demolition is not sufficient. We have to find ways to reinvest so that existing neighborhoods are stabilized. The National Association of Home Builders has identified the proximity of vandalized and abandoned housing as the variable having the greatest adverse impact on the value of single-family residences[xlviii]. But where is that vandalized and abandoned housing found? Disproportionately in older and historic neighborhoods. Nearly 10 percent of our older housing stock is within half a block of vandalized and abandoned housing. What does that mean for property values? It means we are literally stealing an average $8,000 of housing equity from each of those homeowners through our neglect. Twenty six billion dollars is missing from the value of housing because we have been

negligent. How can it possibly be fiscally responsible public policy to have simultaneously a housing affordability crisis and have empty and abandoned buildings? How can it possibly be fiscally responsible public policy to be building what is not affordable while we tear down what is affordable?

Will addressing these issues be cheap? No. But as the *Christian Science Monitor* has pointed out, "Affordable housing costs money. But a lack of it costs even more."[xlix]

It will cost money, but just as an important lesson is finally being learned regarding the loss of federally subsidized units, there are similar parallels in the demolition of privately owned buildings:

> *U.S. housing policy must recognize that preservation is cheaper than new construction, that the rehabilitation and preservation of units returns the units to low-income families faster than new construction can provide such units, and that maintaining and renovating existing units combats blight and contributes to healthy communities*
> Bipartisan Millennial Housing Commission

That's what preservationists have been saying all along.

Why Preserving Older and Historic Houses Won't Work

To put it mildly there exists considerable skepticism about a strategy that focuses on conserving and preserving our older and historic neighborhoods. In some quarters skepticism gives way to outright hopelessness. "…the prospects for preserving much of the older unsubsidized stock are dismal."[l] But not as dismal, one suspects, has having millions of American families priced out of the housing they desperately need.

But the issues raised about older and historic neighborhoods are legitimate and deserve being answered. Below are the most commonly heard.

Those old houses are in terrible shape and need to be torn down.

In fact, only 3 percent of pre-1950 occupied housing is identified as having severe physical problems and another 8 percent having moderate physical problems. Leaving fully 89 percent as being adequate.[li]

But it's just too expensive to fix them up.

A recent HUD sponsored study estimated that the cost of repairing an older home with severe physical problems at $75,000 and one with moderate physical problems at $25,000.[lii] Clearly the specific costs on a particular unit will vary widely. But the point is this: 1) only 11 percent of the older housing stock suffers from moderate or severe physical problems, and 2) the $75,000 figure is comparable to the most cost effective of Federal housing programs and significantly cheaper than some programs.[liii] It is sometimes possible to build *something* more cheaply than the rehabilitation of an historic building. But when quality is part of the equation, historic rehabilitation is always a competitive alternative.

Those old neighborhoods, they just aren't safe.

Well there is certainly crime in neighborhoods. And there is a public responsibility to address crime. But the assumptions should be tested against the reality. In fact 16 percent of residents in older and historic housing say there is crime in the neighborhood. But nearly as many (11.2%) of residents in all neighborhoods say the same.[liv] That is not to minimize the issue, but it does mean that 84 percent of older housing residents don't see crime as a neighborhood problem. More importantly 89% of the residents of older and historic neighborhoods view police protection as satisfactory, virtually the identical percentage as do residents of new construction.

Those historic districts are enclaves of rich people, not a place where you could find affordable housing.

There are more than 11,000 historic districts in the country, which include over 850,000 buildings. About 60 percent of those buildings are in census tracts with a poverty level of 20 percent or more.[lv]

We need a housing program to also be an economic development program – creating jobs – so we need a new construction strategy.

The affordable housing crisis will not be solved solely through the rehabilitation of older and historic housing – new construction will be a critical component of a comprehensive strategy. The National Association of Home Builders has well documented the economic impact of the housing industry. They have calculated that the construction of 1,000 single-family homes generates 2,448 jobs in construction and construction-related industries and approximately $79.4 million in wages – impressive indeed.[lvi]

The same amount of money spent on housing rehabilitation, however – which would create two to three times more housing units – would generate 2,838 jobs and $88.7 million in wages[lvii] – certainly a major economic impact.

Nobody would choose to live in those old neighborhoods if they didn't have to.

Why did residents of older and historic neighborhoods choose the neighborhood? For the best of reasons: convenient to job (22.8%), the house was an important consideration (20.7%), the looks and design of the neighborhood (14.4%) and convenient to friends and family (14%).[lviii]

Those old buildings just don't fit the needs of the marketplace.

Again it is worth finding out why those choices were made. Affordability again emerges as important with 32.1% choosing their particular housing unit for financial reasons. But the next two most common responses were the size of the unit (14.6%) and the design and layout of the house (14.5%).[lix] Not everyone is in the market for the two-story, 2,265 square foot, 3+ bedroom, 2+ bath, 2+ car garage house that is the typical new home built today.[lx]

And there is a public policy reason to be glad that the typical new home is not what everyone is searching for.

> *Finding solutions to the growing nationwide shortage of workforce housing hinges on …a fundamental shift in the public mindset that has been programmed to equate the American Dream with large houses on large lots*.[lxi]
> John McIlwain, Urban Land Institute

Furthermore, the changing demographics of the next two decades will increase demand for a different kind of housing than is typically being built today. By 2020 72 percent of households will be made up of three categories: families without children (39.7%) single person households (27.3%) and adults living with others (4.8%). Married couples with children will be only one household in five.[lxii]

But our problem is that there just isn't enough housing. We have to add to the supply.

There certainly is going to be a need for additional housing. The National Association of Home Builders estimates a need for over 18 million additional housing units during the first decade of the 21st century[lxiii] and many of them will have to be created through new construction – many of them, but not all of them. An interesting pattern has emerged in the development of rental housing under the Historic Rehabilitation Tax Act. Over the last five years over 44,000 units of housing have been created (27,851 of them low and moderate income apartments)[lxiv]. Over 40 percent of the housing units came from historic buildings that weren't originally built as residential structures – warehouses, factories, department stores, office buildings, previously vacant upper floors of downtown buildings. This is a strategy that adds to the supply of housing, within existing cities, without the demolition of existing structures and without adding to the problems of sprawl.

Additionally there are nearly 3 million vacant older and historic housing units that ought to be brought back into use.[lxv] There certainly has to be an increase in supply, but reusing our existing older and historic buildings can add significantly to that housing inventory.

Those rules for fixing up historic houses are just too stringent to be practical for affordable housing.

This is an argument frequently heard – most frequently heard from those who have never redeveloped an historic property. While there are – and should be – standards to maintain the quality and integrity of historic buildings, preservationists are increasingly accommodating other considerations. The Advisory Council on Historic Preservation has issued specific recommendations for historic rehabilitation projects that are geared toward affordable housing.

> *Exterior rehabilitation should emphasize the preservation and stabilization of the streetscape of a district or community.*
>
> *Recognizing funding constraints, exterior and interior treatments should balance architectural character with the objectives of providing safe, livable, and marketable housing units.* [lxvi]

But what about these new approaches for housing – Transit Oriented Design, New Urbanism, Neo-Traditionalism, and New Community Design – shouldn't we be pursuing those avenues instead of trying to fix up this old stuff.

Over the last decade some members of the building and design professions have rethought how towns and cities have been built over the last fifty years. They have concluded that the predominant current pattern is not economically or environmentally sustainable and is not conducive to healthy cities and neighborhoods. They recommend, instead, a return to development patterns that have stood the test of time not for five decades but for five thousand years. And they are right. To the extent that Transit Oriented Development, and New Urbanism, Neo-Traditionalism, and New Community Design represent infill construction within existing

towns and cities they should certainly be encouraged. Even the greenfield development that falls under their respective banners is superior to most conventional suburban development. So are Transit Oriented Development, New Urbanism, Neo-Traditionalism, and New Community Design good ideas? Absolutely.

But older and historic neighborhoods are *already* transit oriented.

But older and historic neighborhoods aren't the new urbanism, they are the real urbanism.

But older and historic neighborhoods aren't neo-traditional, they are traditional.

But older and historic neighborhoods aren't new community design, they are the model upon which new community design is based.

As part of the comprehensive strategy for affordable housing and better towns and cities these approaches are welcomed. But we shouldn't be erecting the replica in one part of town while we are razing the original in another.

We need to have neighborhoods that are diverse, economically and racially, so that affordable housing is not concentrated in isolated locations.

Indeed we do, and that may be the greatest strength particularly of historic neighborhoods. In fact in many communities the *only* place where there is racial, educational, economic, and occupational diversity is the historic districts.[lxvii] A HUD commissioned analysis looked around the country at neighborhoods that, over an extended period, managed to maintain ethnic and racial diversity.[lxviii] Virtually every neighborhood was made up of older and historic housing and the vast majority of the diverse neighborhoods were either National Register Historic Districts, local historic districts, had a concentration of historic structures, or a combination of all three.

Historic neighborhoods are diverse for two simple reasons: 1) the building stock, regardless of its current condition, is usually of a quality, scale, and design that appeals to wide segments of the market, and 2) unlike newer neighborhoods, historic districts typically have a wide variety of housing sizes, conditions, ages, quality and price. When you have a wide diversity of housing options you get a wide variety of human beings who choose those options.

Nobody would live in those old neighborhoods if they didn't have to.

Certainly older and historic neighborhoods have their drawbacks. Mostly because of a failure of public commitment there are more abandoned and boarded up buildings, streets are in worse condition, crime is slightly worse and other adverse impacts are apparent. But in spite of those deficiencies residents in older and historic neighborhoods like where they live. When asked to rate their neighborhood on a scale of 1 to 10, residents of older and historic neighborhoods give and average rating of 7.7, just slightly less than all neighborhoods rating of 8.0.[lxix]

Everyone knows that when you have a historic neighborhood there is gentrification.

Gentrification is a serious issue, especially when discussing affordable housing and merits a reasoned response.

First, diverse neighborhoods should be a public policy goal. Neighborhoods that are all poor can, in no sense of the definition, be considered diverse. What all neighborhoods need is economic integration.

Second, the ultimate defense against gentrification is homeownership, and historic preservation strategies for neighborhood revitalization consistently strive for homeownership by existing residents as a top priority.

Third, recent analysis indicates that far from having a negative impact on low-income residents, the revitalization of historic urban neighborhoods can improve the quality of life among disadvantaged households.[lxx]

Fourth, since there is often significant vacancy in older and historic neighborhoods, there can be significant in-migration while keeping long-term residents in place.

Fifth, the reality of what happens in "gentrifying" neighborhoods is decidedly different than the rhetoric would suggest.

> *Low-income households actually seem less likely to move from gentrifying neighborhoods than from other communities. Improving housing and neighborhood conditions appear to encourage the housing stability of low-income households to the degree that they more than offset any dislocation resulting from rising rents.*[lxxi]
> Citizens Housing and Planning Council

Sixth, historic preservation is often the erroneous target in the gentrification debates.

> *Clearly gentrification is occurring in our city…I don't chock that problem up to historic preservation, in fact I think in some ways by preserving and upgrading and restoring the housing in a neighborhood you can keep the prices more affordable than when new construction comes into a neighborhood.*[lxxii]
> Seattle Mayor Greg Nickels.

Finally, "gentrification" is the result of too little historic preservation, not too much. People of all income brackets are attracted to historic neighborhoods because of the quality of the housing, because of the investment protection that a local historic district often provides, because there is usually a wide range of housing styles and sizes available, because typically there are citizen activists committed to advocating for the neighborhood, and because there are few tools other than local historic districts that can defend a neighborhood against inappropriate uses, out-of-scale development, low quality construction, and the encroachment of objectionable uses. Because the number of households looking for neighborhoods with those characteristics exceeds the supply, historic neighborhoods are in high demand. The answer is not to have fewer historic districts – the answer is to provide historic district protections to more neighborhoods

The 10 Policy Initiatives for Older and Historic Neighborhoods

The Bipartisan Millennial Housing Commission was very clear on the urgency to address the issue of "disappearing" affordable housing. They stated

> *The need to preserve at-risk units is immediate and pressing. Because time is of the essence, any proposed tools or approaches that can quickly and efficiently preserve*

> *housing should receive heightened attention, support, and funding from the federal government*.[lxxiii]

The historic preservation community should respond with a policy agenda for older and historic neighborhoods that would include, but not be limited to the following:

On the local level:

1. Create more local historic districts to protect valuable cultural resources and preserve a rapidly vanishing inventory of affordable housing.
2. Inaugurate a fast-track system for the acquisition and redevelopment of vacant, abandoned, and tax-foreclosed properties.
3. Give priority to older and historic neighborhoods for infrastructure improvements, police attention, recreation and park facilities, and especially schools.

On the state level:

4. Adopt a rehabilitation-friendly building code as in New Jersey that has had an immediate and dramatic impact on the feasibility of the renovation of older and historic structures.
5. Institute Smart Growth initiatives that give priority to redevelopment within current municipalities.
6. Give priority to Low Income Tax Credit projects that utilize historic buildings.
7. Create state tax credits for the rehabilitation of historic properties as have been successfully enacted in Maryland, Missouri, Virginia, North Carolina and elsewhere.

On the national level:

8. Allocate bonus points for all competitive federal housing programs for building rehabilitation projects.
9. Take the suggestion of the Bipartisan Millennial Housing Commission to "undertake a study of the Davis-Bacon requirements and make improvements in such areas as the accuracy of the wage data, the applicability threshold, and the reporting requirements"[lxxiv]
10. Adopt tax credits and other incentives, particularly those that would expand the use of the existing historic tax credit for commercial properties and provide for a historic homeownership equivalent. One example is the "Historic Homeownership Assistance Act."

The Historic Homeownership Assistance Act

The proposed Historic Homeownership Assistance Act is modeled after the Historic Rehabilitation Tax Credit that has been operating successfully for over twenty-five years having spurred over $25 Billion in private investment. Like the commercial rehabilitation this act would provide a 20 percent tax credit for the qualified expenditures made in rehabilitating a historic residence. But unlike the current credit which only applies to income-producing property, the HHAA would provide the credit for owner occupied housing.

The credit could be used in five different ways:

1. The homeowner could do the rehabilitation and take the credit him/herself if there was a sufficient federal income tax liability.

2. The housing developer could rehabilitate a historic house and pass the credit onto the buyer.
3. The housing developer could take the credit, which would effectively lower the required selling price.
4. The homeowner could assign the credit to a regulated lending institution in exchange for a lower interest rate.
5. The homeowner could assign the credit to a regulated lending institution as a down payment on the purchase price of the property.

Three separate barriers have been identified for increasing affordable home ownership: supply of units, affordability (purchase price and/or amount of monthly payment), and wealth (down payment capacity). The Historic Homeownership Assistance could, in the alternative, deal with each of these.

1. If the homeowner uses the credit – increased affordability.
2. If the developer passes the credit to the buyer – increased affordability.
3. If the developer keeps the credit – increased supply and increased affordability.
4. If the bank takes the credit in exchange for lower interest rate – increased affordability.
5. If the bank takes the credit in exchange for down payment – increased wealth.

What impact might the Historic Homeownership Assistance Act have? One analysis concluded that a $10,000 asset infusion [the amount that a $50,000 rehabilitation could produce] could allow more than one-third of all renters (and 20 percent of Hispanic and 30 percent of black renters) to realize moderately priced homeownership.[lxxv]

The Three Principles for Housing Initiatives

Three principles should guide policy makers in seeking additional solutions to the housing crisis – quality, affordability, and responsibility. The best alternatives should meet all three principles.

Consider the possible combinations:

- We could build very low cost housing in existing neighborhoods. That would meet the affordability test and the responsibility test (not adding to the problems of sprawl) but would fail the quality test – and likely have an additional adverse impact on surrounding properties.[lxxvi]

- We could build cheaply constructed housing far out where the land is inexpensive. That would meet the affordability test but fail the quality and responsibility standards.

- We could build well-constructed, traditionally-built housing out on the periphery, meeting the quality and affordability principles but failing on responsibility.

- We could build mobile homes and place them out of town, and only the affordability test is met.

- We could tear down older and historic homes and replace them with large new houses, which would pass the quality and responsibility measures, but at the expense of affordability.

- Or we could commit to the rehabilitation of older and historic houses and achieve affordability, quality, and responsibility.

The Time is Now

If the battle for conserving and preserving our older and historic neighborhoods were a battle fought only by preservationists, the outlook might be dismal indeed. But more voices are being heard – voices beyond the traditional preservation movement – that have grasped the lessons as well.

> *When they're done correctly [historic rehabilitation projects] make the finest affordable housing projects you can come across. The biggest advantage is that it's much more situated for mixed-income housing, if your basic premise is that mixed-income housing is a good objective. The kind of apartments created are so superior that they're attractive to people of a variety of income levels*. [lxxvii] Developer Richard Arnesen, Stone House Development, Inc.
>
> *Resuscitating dilapidated housing stock must become a priority if city neighborhoods are to thrive and support business.*[lxxviii]
> PriceWaterhouseCooper's
>
> *By 71% to 24%, the public supports the idea of state and local governments giving tax credits to for-profit housing development companies if they build housing for low- to moderate-income working families*[lxxix].
> Fannie Mae Foundation Affordable Housing Survey
>
> *Revitalizing older neighborhoods is the perfect antidote to sprawl*.[lxxx]
> Sierra Club
>
> *Restoring life to "undesirable" areas helps us make better use of our resources and reduces the pressure to develop new areas.*[lxxxi]
> Miriam Axel-Lute, National Housing Institute
>
> *Common Ground's effort to restore old New York City buildings – preferably historic landmarks – to their former splendor and then place them into the care of homeless or low-income individuals seemed like a "far fetched vision" in the early 1990's when the nonprofit started out. Four projects later, and one on the way, its innovative approach has not only proven to be a success, it shows the path to cost-effective supportive affordable housing in the city and elsewhere.*[lxxxii]
> National Mortgage News Daily
>
> *Provide tax credits and low-interest loans for people to rehabilitate historic houses and revitalize neighborhoods in cities and older suburbs – Strongly Favor – 44%, Somewhat Favor – 35%.*[lxxxiii]
> Smart Growth America
>
> *The nexus of historic preservation and housing would be furthered by extending tax credit benefits, now limited to income-producing properties, to rehabilitation of historic structures occupied by the taxpayer as a principal residence.*[lxxxiv]
> Housing Facts & Findings*,* Fannie Mae Foundation

Conclusion

America's historic resources have long been recognized for their contribution to our nation's cultural, aesthetic, educational, and social character. Many of our historic buildings are the physical manifestation of the challenges overcome in years past.

Today there is another challenge – the challenge of securing affordable housing for every family in America. Our older and historic neighborhoods have served generations of families well. Our older and historic neighborhoods now have a new mission – to provide homes for the young, homes for new immigrants, homes for those of limited means, homes for first homebuyers, homes for the retired citizen.

We can no longer throw away our older houses and our historic neighborhoods. They are needed today, they will be needed tomorrow, but they demand our attention right now.

---

[i] *Decent, Affordable Housing: It's the American Dream.* National Association of Home Builders, July 2002.
[ii] *Rental Housing Assistance – The Worsening Crisis: A Report to Congress on Worst Case Housing Needs*, Office of Policy Development and Research, U.S. Department of Housing and Urban Development, March 2000
[iii] *Out of Reach2001,* National Low Income Housing Council, Washington, DC 2001
[iv] *Affordable Housing Production Initiatives*, National Association of Realtors, http://www.realtor.org, 2002
[v] *Housing crisis worsens as construction lags demand,* USA Today, July 21, 2002
[vi] *Housing: Back into the Political Limelight,* Neal Peirce Column, July 7, 2002
[vii] U.S Conference of Mayors news release, May 22, 2002
[viii] *Rental Housing Assistance – The Worsening Crisis: A Report to Congress on Worst Case Housing Needs*, Office of Policy Development and Research, U.S. Department of Housing and Urban Development, March 2000
[ix] *Meeting Our Nation's Housing Challenges*, Report of the Bipartisan Millennial Housing Commission, May 2002
[x] *Paycheck to Paycheck: Working Families and the Cost of Housing in America,* Barbara J. Lipman et.al., Center for Housing Policy, Washington, DC 2001
[xi] *The State of the Nation's Housing 2002*, Joint Center for Housing Studies of Harvard University, 2002
[xii] *Paycheck to Paycheck: Working Families and the Cost of Housing in America*, Barbara J. Lipman et.al., Center for Housing Policy, Washington, DC 2001
[xiii] *Paycheck to Paycheck: Working Families and the Cost of Housing in America*, Barbara J. Lipman et.al., Center for Housing Policy, Washington, DC 2001
[xiv] *Challenges to Developing Workforce Housing*, Urban Land Institute, Washington, DC 2002
[xv] *Paycheck to Paycheck: Working Families and the Cost of Housing in America*, Barbara J. Lipman et.al., Center for Housing Policy, Washington, DC 2001
[xvi] *The State of the Nation's Housing 2002*, Joint Center for Housing Studies of Harvard University, 2002
[xvii] *National Housing Agenda: A Springboard for families, for communities, for our nation*, The United States Conference of Mayors, Washington, DC, May 2002
[xviii] *National Housing Agenda: A Springboard for families, for communities, for our nation*, The United States Conference of Mayors, Washington, DC, May 2002
[xix] *Paycheck to Paycheck: Working Families and the Cost of Housing in America,* Barbara J. Lipman et.al., Center for Housing Policy, Washington, DC 2001
[xx] *Challenges to Developing Workforce Housing*, Urban Land Institute, Washington, DC 2002

[xxi] *Paycheck to Paycheck: Working Families and the Cost of Housing in America,* Barbara J. Lipman et.al., Center for Housing Policy, Washington, DC 2001
[xxii] *Employment Outlook: 1998-2008,* U.S. Department of Labor, Bureau of Labor Statistics, September 2000
[xxiii] *Meeting Our Nation's Housing Challenges*, Report of the Bipartisan Millennial Housing Commission, May 2002
[xxiv] *Paycheck to Paycheck: Working Families and the Cost of Housing in America,* Barbara J. Lipman et.al., Center for Housing Policy, Washington, DC 2001
[xxv] *Employment Outlook: 1998-2008,* U.S. Department of Labor, Bureau of Labor Statistics, September 2000
[xxvi] *Paycheck to Paycheck: Working Families and the Cost of Housing in America,* Barbara J. Lipman et.al., Center for Housing Policy, Washington, DC 2001
[xxvii] *Employment Outlook: 1998-2008,* U.S. Department of Labor, Bureau of Labor Statistics, September 2000
[xxviii] *Housing Policy Debate*, Volume 12, Issue 3, Fannie Mae Foundation, 2001. "The Potential and Limitations of Mortgage Innovation in Fostering Homeownership in the United States." David Listokin, et. al., Rutgers University
[xxix] *American Housing Survey for the United States - 1999*, U.S. Department of Commerce, U.S. Department of Housing and Urban Development, 2000
[xxx] *Housing: Facts, Figures and Trends*, National Association of Home Builders, Washington, DC 2001
[xxxi] *Homeownership in the Immigrant Population*, Douglas G. Duncan for the Research Institute for Housing America, 2002
[xxxii] *The State of the Nation's Housing 2002*, Joint Center for Housing Studies of Harvard University, 2002
[xxxiii] *Keeping the American Dream Alive: Proceedings of the Home Ownership Summit 2001*, Summit 2001, Washington, DC, 2001
[xxxiv] *The Next Decade for Housing*, NHAB Economics, Washington, DC 2001
[xxxv] *The State of the Nation's Housing 2002*, Joint Center for Housing Studies of Harvard University, 2002
[xxxvi] *The State of the Nation's Housing 2002*, Joint Center for Housing Studies of Harvard University, 2002
[xxxvii] *White House press release*, June 15, 2002.
[xxxviii] http://www.nahb.com/facts/forecast/New_Home_Prices_monthly.html
[xxxix] *Meeting Our Nation's Housing Challenges*, Report of the Bipartisan Millennial Housing Commission, May 2002
[xl] *ULI press release*, "Have House, Have Job, Have Awful Commute: ULI Looks at Ways to Build Housing Closer to Jobs", Urban Land Institute, Washington, DC, July 1, 2002
[xli] *The Affordable Housing Shortage: Considering the Problem, Causes and Solutions*, Ron Feldman, Federal Reserve Band of Minneapolis, 2002
[xlii] *Examining Supply-Side Constraints to Low-Income Homeownership*, Michael Collins, et. al, Joint Center for Housing Studies of Harvard University, 2001
[xliii] Minding the Gap: Issues in Overcoming the Information, Income, Wealth, and Supply Gaps Facing Potential Buyers of Affordable Homes, J. Michael Collins, Doug Dylla, Neighborhood Reinvestment Corporation, 2001
[xliv] *The State of the Nation's Housing 2002*, Joint Center for Housing Studies of Harvard University, 2002
[xlv] *American Housing Survey for the United States 1999*, U.S. Department of Commerce, U.S. Department of Housing and Urban Development, Washington, DC, 2000
[xlvi] *American Housing Survey for the United States 1999*, U.S. Department of Commerce, U.S. Department of Housing and Urban Development, Washington, DC, 2000
[xlvii] Data from *American Housing Survey for the United States 1999*, which defines "new construction" as units built within the last four years. Unless otherwise noted that definition is used here.
[xlviii] "Explaining House Prices", *Housing Economics*, Paul Emrath, National Association of Home Builders, 2002
[xlix] *Christian Science Monitor*, "Affordable housing – the nest still unbuilt", May 29, 2002
[l] *The State of the Nation's Housing 2002*, Joint Center for Housing Studies of Harvard University, 2002
[li] *American Housing Survey for the United States 1999*, U.S. Department of Commerce, U.S. Department of Housing and Urban Development, Washington, DC, 2000

[lii] *Barriers to the Rehabilitation of Affordable Housing*, David Listokin, Barbara Listokin, Center for Urban Policy Research, Rutgers University, U.S. Department of Housing and Urban Development, 2001
[liii] *Federal Housing Assistance: Comparing the Characteristics and Costs of Housing Programs*, United States General Accounting Office, 2002
[liv] *American Housing Survey for the United States 1999*, U.S. Department of Commerce, U.S. Department of Housing and Urban Development, Washington, DC, 2000
[lv] *Address to the U.S. Conference of Mayors – Madison, Wisconsin*, Richard Moe, National Trust for Historic Preservation, Washington, DC 2002
[lvi] *Housing: The Key to Economic Recovery*, National Association of Home Builders, 2001
[lvii] Based on relationship between new construction and rehabilitation multiplier from *Regional Multipliers: A User Handbook for the Regional Input-Output Modeling System (RIMS II)*, US Department of Commerce, 1992
[lviii] *American Housing Survey for the United States 1999*, U.S. Department of Commerce, U.S. Department of Housing and Urban Development, Washington, DC, 2000
[lix] *American Housing Survey for the United States 1999*, U.S. Department of Commerce, U.S. Department of Housing and Urban Development, Washington, DC, 2000
[lx] *Housing: Facts, Figures and Trends*, National Association of Home Builders, Washington, DC 2001
[lxi] *ULI press release*, "Have House, Have Job, Have Awful Commute: ULI Looks at Ways to Build Housing Closer to Jobs", Urban Land Institute, Washington, DC, July 1, 2002
[lxii] *The Implications of Changing U.S. Demographics for Housing Choice and Location in Cities*, Martha Farnsworth Riche, for the Brookings Institution Center on Urban and Metropolitan Policy, March 2001
[lxiii] *The Next Decade for Housing*, National Association of Home Builders, Washington, DC 2001
[lxiv] *Federal Tax Incentives for Rehabilitating Historic Buildings*, U.S. Department of the Interior, Washington, DC 2001
[lxv] *American Housing Survey for the United States 1999*, U.S. Department of Commerce, U.S. Department of Housing and Urban Development, Washington, DC, 2000
[lxvi] *Affordable Housing and Historic Preservation*, Advisory Council on Historic Preservation, Washington, DC 1995
[lxvii] *The Economic Benefits of Preserving Philadelphia's Past*, Donovan D. Rypkema, Preservation Alliance for Greater Philadelphia, 1998 and *Preservation & Property Values in Indiana*, Donovan D. Rypkema, Historic Landmarks Foundation of Indiana, 1997
[lxviii] *Cityscape: A Journal of Policy Development and Research*, Volume 4, Number 2, US Department of Housing and Urban Development, Washington, DC 1998
[lxix] *American Housing Survey for the United States 1999*, U.S. Department of Commerce, U.S. Department of Housing and Urban Development, Washington, DC, 2000
[lxx] *Housingonline*, "Two Studies Challenge the Notion That Gentrification Harms Low-Income Residents", National Housing and Rehabilitation Association, June 19, 2002
[lxxi] *The Urban Prospect*, "Gentrification and Displacement", Citizens Housing and Planning Council, Volume 8, Number 1, January/February 2002
[lxxii] *Historic Seattle*, "Gentrification and Historic Preservation", 2001
[lxxiii] *Meeting Our Nation's Housing Challenges*, Report of the Bipartisan Millennial Housing Commission, May 2002
[lxxiv] *Meeting Our Nation's Housing Challenges*, Report of the Bipartisan Millennial Housing Commission, May 2002
[lxxv] *Housing Policy Debate*, Volume 12, Issue 3, Fannie Mae Foundation, 2001. "The Potential and Limitations of Mortgage Innovation in Fostering Homeownership in the United States." David Listokin, et. al., Rutgers University
[lxxvi] *The Affordable Housing Shortage: Considering the Problem, Causes and Solutions*, Ron Feldman, Federal Reserve Band of Minneapolis, 2002
[lxxvii] *Shelterforce Online*, National Housing Institute, July/August 1999
[lxxviii] *Emerging Trends in Real Estate*, PriceWaterhouseCooper's, 2002
[lxxix] *Results of the Fannie Mae Foundation Affordable Housing Survey*, Hart/Teeter, Fannie Mae Foundation, 2002
[lxxx] *Solving Sprawl: 1999 Sierra Club Sprawl Report*, Sierra Club, 1999
[lxxxi] *Solving Sprawl: 1999 Sierra Club Sprawl Report*, Sierra Club, 1999

[lxxxii] *National Mortgage News Daily*, "Common Ground Weds Affordable Housing with Historic Preservation", April 8, 2002
[lxxxiii] *National Survey on Growth and Land Development*, Belden Russonello & Stewart, Smart Growth America, 2000
[lxxxiv] *Housing Facts & Findings*, Volume 3 Issue 2., Fannie Mae Foundation.

COMMUNICATION

PC1

April 30, 2019

Deb Andrews
Manager, Historic Preservation Program
City of Portland
389 Congress Street
Portland, Maine 04101

Re: Petition for the Nomination of a Munjoy Hill Historic District

Dear Ms. Andrews,

We, the undersigned, owners of potentially affected property recommended for inclusion in a Munjoy Hill Historic District and/or recommended for designation as individual landmarks, write pursuant to City of Portland Land Use Ordinance Section 14-615 to petition for the nomination of a Munjoy Hill Historic District and the designation of related individual landmark buildings. We request that you forward this petition to Portland's Historic Preservation Board, and we invite two (2) or more members of that Board to officially sponsor this petition in order to formally initiate the nomination of the Munjoy Hill Historic District and related designation of related individual landmark structures.

As you know, Munjoy Hill was largely developed as a residential neighborhood between 1850 and 1925. It also contains a business district on Congress Street on top of Munjoy Hill, which establishes the context for the 1808 Portland Observatory, a National Historic Landmark. The area was not developed in uniform fashion, but rather the current building stock reflects several different important historical and economic influences operating in this section of Portland. These include railroad-influenced development above the Portland Company, post-1866 Great Fire intensive residential construction, sections of historic concentrations of African American residents, development of dense housing to accommodate late 19th and early 20th century European immigrants, and the later developed Eastern Promenade residences bordering the already-designated Eastern Promenade historic landscape district.

Many of the houses on Munjoy Hill are admittedly smaller and less grand than those built on the Western Prom and West End of the City. However, the large concentrations of intact buildings on Munjoy Hill, meant for middle-class and working-class occupants, reflect patterns of development that are equally important to the history of Portland and equally deserving of historic district protections. The Western Prom area and West End of Portland have benefitted from historic district designations for 25 to 30 years. It is time to extend the same type of protection to those portions of the Munjoy Hill neighborhood which exhibit the historical and architectural significance intended to be protected by Portland's Historic Preservation Ordinance.

Sincerely,

Printed name: Berry Manter

Property Address: 46 E Promenade

Printed name: Etna Koch

Property Address: 81 Vesper St.

Petition for the Nomination of a Munjoy Hill Historic District, cont'd

Printed name: JEAN MCMANAMY
Property Address: 10 WILLIS

Printed name: Peter L. Murray
Property Address: 104 North St.

Printed name: Tica Douglas
Property Address: 11 Munjoy St.

Printed name: Michael Hoover
Property Address: 40 Melbourne

Printed name: Vana Carmona
Property Address: 105 North

Printed name: R. John Westhoff
Property Address: 11-15 Morning ST.

Printed name: WAYDE VALZANIA
Property Address: 27 MORRILL ST.

Printed name: Betty Westhoff
Property Address: 11 Morning St

Printed name: Diane Dawson
Property Address: 29 Morning St

Printed name: Hilary Bassett
Property Address: 55 Morning St Apt 1-1

Petition for the Nomination of a Munjoy Hill Historic District, cont'd

Pamela Day

Printed name: Pamela Day

Property Address: 25 Waterville St.

Mary K Cassale

Printed name: Mary K. Cassale

Property Address: 35 Waterville St

Enoch Wenstrom

Printed name: ENOCH WENSTROM

Property Address: 66 Beckett St

Edward C Hoyt

Printed name: Edward C Hoyt

Property Address: 7 Fire St /14-16 North St

Enoch Wenstrom

Printed name: ENOCH WENSTROM

Property Address: 83 Beckett St

Edmund Gardner

Printed name: Edmund Gardner

Property Address: 84 Eastern Prom

Carol M. Connor

Printed name: Carol M. Connor

Property Address: 12 Montreal St

G. Robinson Whitten

Printed name: G. ROBINSON WHITTEN

Property Address: 23 ST. LAWRENCE ST.

Karen Snyder

Printed name: Karen Snyder

Property Address: 72 Waterville St

Robin F. Whitten

Printed name: ROBIN F WHITTEN

Property Address: 186 Eastern Prom

Barbara Vestal

Barbara Vestal

220 O'Brien St

& 101-107 Congress

Deb Andrews
Manager, Historic Preservation Program
City of Portland
389 Congress Street
Portland, ME 04101

Belinda Ray
Portland City Councilor
City of Portland
389 Congress Street
Portland, ME 04101

Re: Munjoy Hill Historic District

Dear Ms. Andrews & Councilwoman Ray,

We, the undersigned, owners and residents of potentially affected property recommended for inclusion in the Munjoy Hill Historic District and/or recommended for designation as individual landmarks, write pursuant to the Portland Land Use Ordinance Section 14-615 to formally oppose such designation in our neighborhood. We request that you forward this petition to Portland's Historic Preservation Board, the Planning Committee and the City Council.

As you know, Munjoy Hill was largely developed as a residential neighborhood. It also contains a business district on Congress Street on Munjoy Hill, which establishes the context for the 1808 Portland Observatory, a national Historic Landmark. The area was not developed in uniform fashion, but rather the current buildings stock reflects several different important historical and economic influences operating in this section of Portland. These include railroad-influenced development above the Portland Company, post-1866 Great Fire intensive residential construction, sections of historic concentrations of African American residents, development of dense housing to accommodate late 19th and early 20th century European immigrants, and the later developed Eastern Promenade residences bordering the already-designated Easter Promenade historic landscape district.

As the April 2019 inventory report indicates, 85% of the 408 buildings assessed are contributing. This illustrates that the vast majority of buildings considered for the Historical Designated area clearly communicate their architectural roots and contribute to the overall historic character of the neighborhood. With only 15% designated as non-contributing in the most heavily remodeled area of the Hill that was assessed, we are proud of the City's current processes and procedures to maintain the history of the Hill and we are equally as proud of homeowners who have, without restriction, maintained our neighborhood treasures at great individual expense.

With the current pressures facing our City to provide affordable and workplace housing and to support a diverse, working class demographic, we stand against Historical Designation of the Munjoy Hill neighborhood at this time and are very grateful for your work and your support to pass this letter onto the Preservation and Planning teams as well as our City Council.
Thank you very much

Re: 12th Historic Designation on Munjoy Hill

To City Councilors:

As a resident of Munjoy Hill, I am writing you to either slow down or stop the movement. Here are the reasons why:

1. Opposition does exist. It takes many forms.
    a. There are citizens on the Hill who want no designation
    b. There are some who want only additional Landmarks to be named
    c. There are some who are interested in State or Nat'l Designation, not Local
    d. There are **many** who want the City to stay out of it

2. Most of the Hill has no idea the City is pursuing designation so have not weighed in on the topic. With that said, 21 citizens reached out to the HPB to ask for designation to be accelerated which is a classic tactic by those who do not want the entire Hill to be polled and selfishly only want to get their NIMBY way. 21 people actually believe that they have standing to speak with 4500. It is a ridiculous notion that I hope all of you do not consider as you develop your own positions. (Yes, you know who many are because they write the Council often hoping quantity of letters from few leaves an impression that they are the majority.)

3. In only a two-year period, the City has put a moratorium in place on the hill and has changed the R6 zoning. Not enough time has passed to understand the impact of the recent actions. In this case, the city is moving too quickly without justification.

4. After speaking to 4 of the leading Affordable Housing developers in our city, each stated that adding another Historical District in our city will not only fundamentally stop further affordable or workplace housing on the Hill, it will also negatively impact values in surrounding neighborhoods reducing the prospects to add Workplace/Affordable housing nearby.

5. The HPB & Planning Board have aggressively gone from hearing a concern about demolition to now proposing one very large contiguous district on the hill without any presentation of other options. Why a local historic designation? Why not present a state designation or voluntary national? Further, the HPB has spent thousands of dollars of our tax money to fund a study to assess each and every building on the hill. While the study is of value, it is premature without a discussion on options for the hill or, as pointed out in #1 above, let's understand the effect of the recent changes over the past 2 years before we swing the

pendulum too far. (Please see the attached document that breaks down the HPB report/assessment and raises significant questions that are unanswered)

6. Much of Hill offers non-contributing & very diverse structures. This is not the West End for example where there are brick, similar-looking, contributing buildings. On the Hill, as evidenced by the HPB report, most buildings are already maintained well by their owners. Munjoy Hill is a highly architecturally diverse neighborhood AND with only <2% of older buildings demo'd in the past few years, the City is solving for an issue that simply does not exist. (And, many demolished were beyond the point of repair.)

7. Finally, the belief that slowing down the growth of modern multi unit buildings helps the renter is a myth. Look at the West End. In a recent conversation with a realtor / architect who works in that neighborhood, owners are increasing rents to maintain their buildings due to the oversight/HPB approval process. Renters are being pushed out. (And, don't forget, some modern buildings offer diverse architecture (which is a Hill tradition) and provides energy efficient buildings, which has an environmentally friendly benefit.

Personally, as a homeowner of an 1800s contributing house, we, like many, do our best to respect the past and the home's appearance while maintaining it. We moved onto the Hill in 2013 purposefully because it was not designated historic. We do not want the added pressures of expense and process to maintain, as we have for the last 6 years. As you'll see in the HPB report summary attached, most evaluated homes are deemed contributing. These building have survived decades without City oversight – why the push to add that now when, as stated above, there is no issue on the Hill?

Further, why isn't the City pushing for more information to be presented to the Hill neighborhood? Why is it that the HPB is the only team presenting (and refusing to participate on panels with those opposed or with those who recommend other options?) In other words, why is the City so focused on making this happen? If this is seen as another tax source, please consider what you are doing to the renters, the future of affordable housing, and the long time resident that wanted to sell to a developer to fund their retirement.

Maybe this needs to go to a city-wide vote? At the very least , I believe that every household on Munjoy Hill needs to be contacted regarding this issue and can work to accomplish this.

Finally, is this type of taking one's property even constitutional?

Thank you for your consideration.

Johanna Henry

From: **Carol Connor** c.connor0@icloud.com
Subject: Historic Preservation on Munjoy Hill
Date: April 16, 2019 at 12:37 PM
To: dga@portlandmaine.gov
Cc: Carol Connor balsamique@live.com

Dear Mrs. Andrews,
Here is an early picture of 8-12 Montreal Street provided by the Libby Family, owners around 1900.



I Have attended meetings, written comments and spoken to the Planning Board, the Historic Preservation Board and the City Council voicing my concerns about development in the R-6 zone, especially when it requires the demolition of historic homes and structures. It concerns me that we, the local citizens seem helpless to slow down or redirect the progression of this deterioration of our neighborhood's character. In spite of clearly stated Design Standards, decisions have been made and approval given for development plans that clearly violate the standards and offend the existing quality of the streetscape. Many of the residents of the Montreal/Willis St. neighborhood have expressed an interest in having this area be designated as part of the North Street/ Eastern Promenade Historic District. That information, along with signatures including mine, has been presented to you in writing by other interested neighbors. It appears that there has been little progress regarding this request, so I'm asking again. Please consider including Montreal Street in the historic district for this area.
If the Historic Preservation Board decided it is not an appropriate action to include the entire street, I would like my house at 12 Montreal to be designated as a stand-alone property that should be declared Historic and Preserved.

With support from a Greater Portland Landmarks representative, I have accessed and studied the deeds and early records of the house and historic period. I am confident that the house has historical significance, in a folksy working class kind of manner. I am mailing you an illustrated packet today that describes my house, its history and the reasons it should be included in the historic district of Munjoy Hill.
Please share this with your fellow board members. Thank you for your consideration.

Carol M Connor

The interior construction is unusual in its shaping of the wood to accomodate the narrow passageway and door to the bedroom. One gets the feeling of being on a boat. It makes me wonder about the original resident and builder of the house, Mr. James B. Newell. was a joiner which means he could have the skills to build houses or boats.



UNUSUAL STEAM BENT BOARD, SHAPED TO THE SPACE. FEELS LIKE BEING ON A SHIP. JAMES B NEWELL WAS A JOINER WHO BUILT THE HOUSE,



MAIN ENTRANCE AND STAIRCASE



Circa 1943 Harry E. Libby's Granddaughters in the yard at 12 Montreal St.



HARRY E. LIBBY, 12 MONTREAL STREET OWNER EARLY 1900'S. HE CONSTRUCTED THE BOATHOUSE ON THE PROPERTY TO BUILD AND STORE HIS SMALL BOATS .EARLY MAPS SHOW MONTREAL ST. EXTENDED CLEAR DOWN TO EAST COMMERCIAL STREET ALL THE WAY TO THE WATER. COULD MR. LIBBY HAVE USED THIS ROUTE TO LAUNCH HIS BOATS?

Built in 1855, the home at 12 Montreal Street is one of the early houses on Munjoy Hill.

Though it is not necessarily a pristine architectural sample, it is evident that it has historical significance due to its early construction and style. The builder and first occupant was a joiner named James B. Newell. We can surmise by his occupation being a joiner and by his address in 1852-53 being described in the Portland Directory as near the old hospital on the Eastern Promenade, that he very likely built the house while living nearby. He had lived on Myrtle Street in 1850-1851 and moved to the Promenade after that. James and his wife Almira and two sons, James N. and Lendell R are the first occupants of the Montreal Street house, showing up in the 1856-57 Portland Directory.

Chronology

What follows is the chronology of owners/holders/ residents of 12 Montreal St

1855 Moses Gould sold the land to James B. Newell
1855 James B Newell build the house at 8-12 Montreal
1856-1858 James B. Newell (Mortgaged by Elbridge Gerry for $300.00 in 1858)
Residents :James B, Wife Almira, sons James N and Lendell R, and Albert Newel, a painter
1867 Elbridge Gerry to John M. Stewart (Stewart doesn't move in until 1869
1869-1873 John M. Stewart Molder (Moulder)
1899 John M, Stewart died and the property went to his daughter Mary F. (Huston) not sure of spelling, the script was difficult to decipher
Though John owned the property from 1869 until his death in 1999, his residence was in Falmouth Maine. A number of individuals lived in the house over the years
1882 Charles F. Griffin, Fisherman
1883 Edwin H. Pearson, painter
1884 George Foss Machinist @ the Portland Co
1885-1886 Joseph G FinlayCar Repairer Grand Trunk Railway
1886-George L. Kimball, Boiler-Maker, the Portland Co
1887 Vacant
1888-1893 William A. Fuller, painter
1895-1898 John R. Lowell clerk
1899-1903 Richard B. Lowell carpenter
1904-Anthony Coyle Stone Cutter
1905-1908 Matthew Conley, Laborer
1908 William Cavanaugh to Harry E. Libby and Harry S. Libby
1943 Harry E. Libby and Eleanor S. Libby to Elmer C. Libby
1946 Elmer C. Libby and Eleanor S. Libby
1948 Elmer C. Libby to Frank and Theresa Sherwood
1992 Frank Sherwood to Carol M.(Peterson) Connor
1992-present Carol Marie Conno

Google Groups

Please Support Tonight 7/10/2019-Nomination of Proposed Munjoy Hill Historict District

Karen Snyder <karsny@yahoo.com> Jul 10, 2019 8:05 AM
Posted in group: **Planning and Urban Development**

Dear Historic Preservation Board Members,

Please nominate the proposed Munjoy Hill Historic District in the Historic Preservation Board Workshop that will be held tonight on 7/10/2019. The City Planning Dept/Planning Board continues to ignore adhering to the R6 infill design standards and protecting the street scape as well as to consider how the pre-existing community is affected by these oversized luxury cubes that are being built next to them.

It is bad enough affordable housing is being removed without being replaced but for the City to ignore the surrounding street scape and to not consider how these new structures affect the surrounding property owners is morally and ethically not right and potentially legally not right based on pending lawsuits.

Below are comments sent to the Planning Dept, PPH, and the new property owners by existing property owners that made this neighborhood a home and community rather than an investment flip. It is to show you how upset they are with this trend on Munjoy Hill and what happens when design standards, streetscape, and considering surrounding properties are being ignored by the City Planning Department/Planning Board.

Comment #1:
****
> Dear xxxx and xxxx,
> Not only is your monster house blocking light and air from my and the neighbors homes the much beloved and cherished views of the observatory from the street and gardens have now gone forever.
> Maybe the rules and guidelines approved your plans but does that really,morally give you the right to do what you have done helping to turn our beautiful Munjoy Hill into Munjoy Hell.
> I am someone who has dedicated the last ten years to beautifying the streets and gardens and providing affordable housing to this neighborhood.
> I am heartsick and disgusted to witness your callous ,selfishness.I had hoped for something so much better.
****

Comment #2:
****
City Representatives:

I'm writing in connection with the Demolition/Construction Project at 9 Moody Street on Munjoy Hill.

I'm the owner of a condominium unit at xx Morning Street, a building with 8 condominium units that has existed for more than 100 years with uninterrupted views of the western mountains and daily sunsets. Until now.

The City exempted this 9 Moody Street Demolition/Construction project from its new construction moratorium. However, by allowing this single-family 4 1/2 story tower project, the City (perhaps unwittingly) enabled the views in our historic Munjoy Hill neighborhood to be decimated. Rather than explain in words, the best evidence is seeing it for yourself. Accordingly, I've attached pictures taken with an iPhone from my kitchen window across the street.

The ***before*** and ***after*** pictures are dramatic. Attached please find:

1) One picture from Summer 2018 before demolition and construction (the rainbow actually rests on the prior house located on the lot)
2) Three pictures from the last couple days outside my kitchen window at xx Morning Street
3) A compilation of pictures in a Word document

It is sad and frustrating that the City allowed this to occur; for a single-family personal residence no less. I'm not sure how the owners of this house tower (developer Jim Brady according to the architect drawings) described the project to the City, but I can't imagine the City would have allowed it to go forward if it had any idea it would look so dramatically obstructionist, in a historic Portland neighborhood no less.

A couple of you have kindly met with me on this issue. I appreciate it, but steps need to be taken to avoid this occurring again, particularly in Portland's residential neighborhoods. Once the City allows projects like this, there is no way to turn back. Historic districts are one option, if properly adopted. Also, perhaps going forward the City should consider view easement protections to protect residents from developers like Mr. Brady who aren't interested in protecting the integrity of our City's residential neighborhoods.

While I appreciate your personal efforts, more needs to be done to preserve our communities and the residential neighborhoods in the City of Portland.

Thank you for your time and attention to this matter.

****

Comment #3:

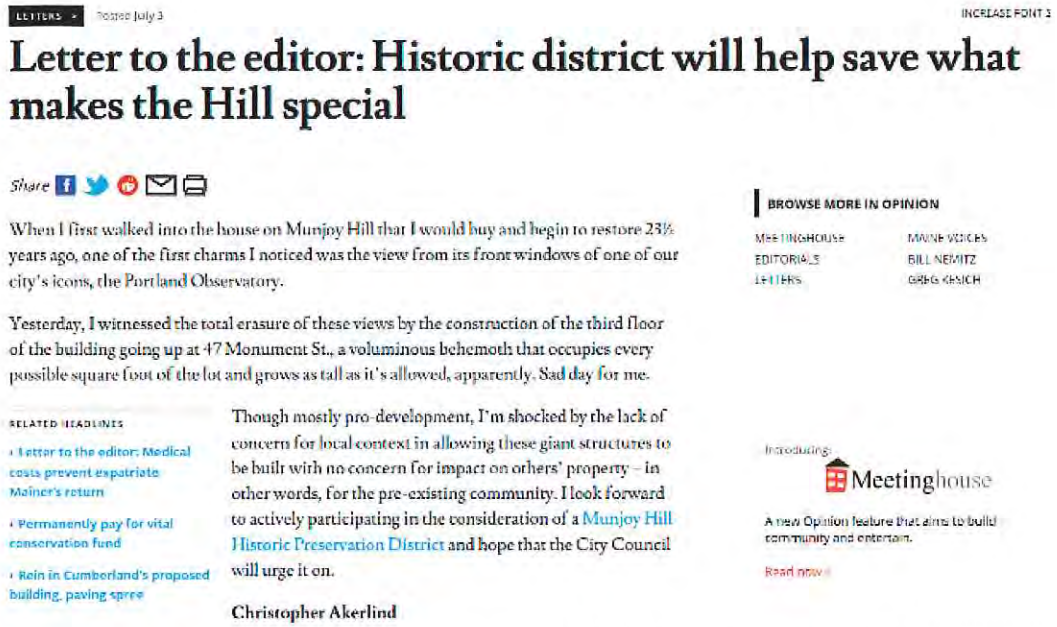

LETTERS » Posted July 3

INCREASE FONT S

Letter to the editor: Historic district will help save what makes the Hill special

Share

When I first walked into the house on Munjoy Hill that I would buy and begin to restore 23½ years ago, one of the first charms I noticed was the view from its front windows of one of our city's icons, the Portland Observatory.

Yesterday, I witnessed the total erasure of these views by the construction of the third floor of the building going up at 47 Monument St., a voluminous behemoth that occupies every possible square foot of the lot and grows as tall as it's allowed, apparently. Sad day for me.

Though mostly pro-development, I'm shocked by the lack of concern for local context in allowing these giant structures to be built with no concern for impact on others' property – in other words, for the pre-existing community. I look forward to actively participating in the consideration of a Munjoy Hill Historic Preservation District and hope that the City Council will urge it on.

Christopher Akerlind

RELATED HEADLINES

- Letter to the editor: Medical costs prevent expatriate Mainer's return
- Permanently pay for vital conservation fund
- Rein in Cumberland's proposed building, paving spree

BROWSE MORE IN OPINION

MEETINGHOUSE | MAINE VOICES
EDITORIALS | BILL NEMITZ
LETTERS | GREG KESICH

Introducing Meetinghouse

A new Opinion feature that aims to build community and entertain.

Read now »

****

In conclusion, I sincerely hope you take into consideration how these demolitions and poorly designed oversized buildings that are being allowed affect existing property owners that have lived here for decades and don't consider this an investment flip but their home and community.

Once again, please nominate the proposed Munjoy Hill Historic District before the "Hill", it's character, and it's history are erased for good.

Regards,
Karen Snyder
72 Waterville

PC6

Portland Maine | Yes, Google's good here

Deb Andrews <dga@portlandmaine.gov>

Public Comment: Proposed Munjoy Hill Historic Gerrymander - Missing Information

1 message

George Rheault <george.rheault@gmail.com> Wed, Jul 10, 2019 at 2:32 PM
To: hp@portlandmaine.gov, Deb Andrews <dga@portlandmaine.gov>, rwiener@portlandmaine.gov, Christine Grimando <cdg@portlandmaine.gov>, Jeff Levine <jlevine@portlandmaine.gov>

It is impossible to assess the validity of the proposed Munjoy Hill Historic District under consideration by the HPB with the presently available information in the public record.

Therefore, please provide the following information to the general public and the HPB in advance of the next workshop on this item.

- Greater Portland Landmarks "windshield" survey

- Greater Portland Landmarks map showing potential Munjoy Hill historic district boundaries

- copy of any and all executed agreements (including amendments, extensions, side letters and attachments/exhibits/schedules to same) between Scott Hanson (a/k/a Sutherland Conservation & Consulting) & City of Portland

- copy of any and all executed agreements (including amendments, extensions, side letters and attachments/exhibits/schedules to same) between Sam Shupe and/or Tova Mellen & City of Portland

- copy of CV/qualifications of Scott Hanson, Sam Shupe and/or Tova Mellen including any affiliates of each assisting with their work product associated with Munjoy Hill historic resources evaluation

- copy of all work product including primary source identification delivered to City of Portland via any means (digital or otherwise) by Scott Hanson, Sam Shupe and/or Tova Mellen including any affiliates of each

- copy of all invoices/billing statements/timesheets submitted to City of Porland by Scott Hanson, Sam Shupe and/or Tova Mellen including any affiliates of each

- copy of all payments made by City of Portland to Scott Hanson, Sam Shupe and/or Tova Mellen including any affiliates of each

- copy of any and all executed agreements (including amendments, extensions, side letters and attachments/exhibits/schedules to same) between Munjoy Hill Neighborhood Organization and/or Greater Portland Landmarks & the City of Portland pertaining to any aspect of an evaluation of the built environment of Munjoy Hill for purposes of historic preservation

- copy of all payments made TO the City of Portland by Munjoy Hill Neighborhood Organization or Greater Portland Landmarks pertaining to any aspect of an evaluation of the built environment of Munjoy Hill for purposes of historic preservation

- copy of all drafts of proposed district boundaries generated to date by City of Portland planning staff

- footnote/underlying source identification for each conclusory statement made in MUNJOY HILL ARCHITECTURAL DEVELOPMENT & CONTEXT STATEMENT DATED APRIL 2019

Thank you.

PC7

Portland Maine | Yes. Google's proud here.

Deb Andrews <dga@portlandmaine.gov>

50 Waterville St

1 message

George Reiche <reiche_george@yahoo.com> Wed, Jul 10, 2019 at 8:43 AM
To: dga@portlandmaine.gov, planning@portlandmaine.gov, jlevine@portlandmaine.gov
Cc: jpj@portlandmaine.gov, bsr@portlandmaine.gov, sthibodeau@portlandmaine.gov, jduson@portlandmaine.gov, nmm@portlandmaine.gov, jcosta@portlandmaine.gov, pali@portlandmaine.gov, bbatson@portlandmaine.gov, estrimling@portlandmaine.gov

Dear Historic Preservation Board Members and Deb Andrews,

I chose to renovate 50 Waterville St because it was the right thing to do, and it's what would make the four generations of fathers who lived on the hill before me proud. It was not to save time or money, that's for sure. Every decision inside and out has been to preserve the character of the finest parts of this house. No one in their wildest dreams would build this house from the ground up, it holds too much character for the modern eye. I am so pleased to have had the chance to give this house another life. I support the proposed Munjoy Hill Historic District. Please nominate as soon as possible.

George Reiche
50 Waterville St.

PC8

Portland Maine

Deb Andrews <dga@portlandmaine.gov>

FW: Please nominate Munjoy Hill as a historic district

1 message

e w <eenebw@hotmail.com> Wed, Jul 10, 2019 at 9:51 AM
To: "dga@portlandmaine.gov" <dga@portlandmaine.gov>

Hi: I sent a slightly different version of this last night. Please forward to the board today if possible.

Thanks

Dear Historic Preservation Board:

Unfortunately, I have a prior commitment so can not attend the Meeting tonight but please take this letter in lieu of attending.

As a long term resident of Munjoy Hill and owner of two late 1800 era 3 unit buildings, I am pleased to see a potential historic district including Beckett Street. I have sent many emails in the past and attended the recent city meetings about a Historic District, handed out flyers in support of a Munjoy Hill Historic District and/or preserving 1800 era buildings. In the 27+ years I have lived on Munjoy Hill I have seen a lot of historic architecture permanently destroyed. I am a true believer in preservation of historic architecture from the 1800's where possible. I have seen first hand of the transformation of other Portland Neighborhoods from run down areas to thriving Neighborhoods due to being in a Historic District. These positive transformations were not done by razing and rebuilding but instead by pride of ownership.

With that said, I believe a Historic District for Munjoy Hill would stabilize the out of control razing and destruction of the neighborhood character while once again instilling pride in owning and maintaining a piece of history that tourists and future generations will enjoy. I realize there are many differing opinions on maintaining old architecture or the value of it but the truth is 1800 era architecture is becoming more and more extinct across the country. Not to criticize but, the last few years have not been kind to Munjoy Hill. Developers such as Brady have decimated houses, blocked people's views and instead built mansions for their own personal gain. It is obvious to many that developers have the end goal to forever change Munjoy hill and the city seems to be participating in that goal. There seems to be no regard to what the long term property owners want which generally does not align with developers. I am sure the board has received many letters from these developers talking of the horrors of our old buildings. In retrospect these buildings on Munjoy hill are NO different than the other building protected in other Historic districts. I can not count the times tourists come down our streets and take pictures of the old buildings. Why would we continue to destroy them only because a few greedy developers and elite rich want to move in to the hill? I realize these developers, elite and Real Estate agents have a lot of money to throw around to publicize and promote the benefits of razing Munjoy Hill. But in reality, it is all for their personal gain and not for the good of the neighborhood.

Please nominate Munjoy Hill as outlined in the current proposal, which includes Beckett St, as a Historic District.

thanks

Enoch and Gail Wenstrom

88 and 83 Beckett Street

Portland

Portland Maine | Yes. Google's good here.

Deb Andrews <dga@portlandmaine.gov>

Proposed Munjoy Hill Historict District

1 message

Berry Manter <berrymanter@yahoo.com> Wed, Jul 10, 2019 at 12:34 PM
To: Deb Andrews <DGA@portlandmaine.gov>
Cc: Planning and Urban Development <planning@portlandmaine.gov>, Belinda Ray <bsr@portlandmaine.gov>, Spencer Thibodeau <sthibodeau@portlandmaine.gov>, Kim Cook <kcook@portlandmaine.gov>, Pious Ali <pali@portlandmaine.gov>, Brian Batson <bbatson@portlandmaine.gov>, Justin Costa <jcosta@portlandmaine.gov>, Nicholas Mavodones <nmm@portlandmaine.gov>, Jill Duson <jduson@portlandmaine.gov>, Ethan Strimling <estrimling@portlandmaine.gov>, Jon Jennings <jpj@portlandmaine.gov>

Dear Deb Andrews,

I regretfully cannot attend tonight's workshop, but want to ensure that you and city staff know I fully support the proposed historic designation of Munjoy Hill as a vital addition to preserving the character of the city.

Thank you for all the time and work you and your staff have put into extensive research and presentations to date. Its been impressive to observe your knowledgable and gracious demeanor as you patiently answer/advocate/explain the torrent of concerns and questions regarding this complicated project in recent public presentations.

Should additional change be considered at this point in time, it would be to increase the protected historic boundary to cover more area of the Hill. The proposed rules and exceptions provide owners extensive freedom to adapt their properties to personal needs, as well as make available the many "non-contributing" properties for future non-historic development. We all win.

Thank you again,

Berry Manter
46 Eastern Promenade

Portland Maine

Deb Andrews <dga@portlandmaine.gov>

Munjoy Hill Historic District Questions

1 message

Mark Googins <mgoogins@verrilldana.com> Thu, Jul 11, 2019 at 2:34 PM
To: "dga@portlandmaine.gov" <dga@portlandmaine.gov>

Ms. Andrews:

My wife and I own two properties on the Hill (we have always been told they are 63 and 69 Morning Street; your inventory refers to them as 63 and 65 Morning Street). I attended last night's information session. I enjoyed your presentation and although we have no plans to make any changes we will be following this process with interest.

I had two questions relating to our properties. I thought you would prefer to communicate by email but if you prefer I would also be happy to chat on the phone, or schedule a time to meet at your office.

If there is someone else that I should be addressing these questions to, please just let me know.

First, although both buildings are highlighted in blue on the district designation map, 63 Morning Street was built in the mid 80's and so I do not understand how it could be eligible. I thought it would be orange (ineligible due to date of construction).

Second, the older house, which dates to the early 1920's, has an attached garage and two screened porches all dating from much later and not done in the style of the main house. If the historic zone passes as currently contemplated, and we wanted to restore and/or replace those later additions with the same or similar structures would that be limited or prohibited by the historic zone designation or are they forever "grandfathered"? I understand that almost any activity relating to the exterior will be subject to a review process, and I assume that if we were able to replace the existing screened porches and garage with structures that are more in the style of the old house that it would be approved, but what is the standard for replacing non-historic additions with equally non-historic new/replacement additions?

Thanks.

Mark Googins

Mark K. Googins

One Portland Square

Portland, ME 04101-4054

Office: (207) 253-4406

Cell: (207) 650-0180

Fax: (207) 253-4407

This email and any attachment was sent from the law firm Verrill Dana, LLP. It may contain information that is privileged and confidential. If you suspect that you were not intended to receive it, please delete it and notify us as soon as possible. Thank you.

PC11

Portland Maine Ye Google's got here

Deb Andrews <dga@portlandmaine.gov>

MunjoyHill Historic District

1 message

Susan Yandell <sueyandell@gmail.com> Mon, Jul 22, 2019 at 5:19 PM
To: dga@portlandmaine.gov

Hi Deb ,In follow up to our conversation today I wish to confirm my desire to have my property at 51 Monument St Portland Me . become part of the Munjoy Hill Historic District .
Thank you,Sue Yandell

Portland Maine | Ye: Google's online

Deb Andrews <dga@portlandmaine.gov>

Good morning

1 message

Christopher Akerlind <chrisakerlind@gmail.com> Tue, Jul 23, 2019 at 10:04 AM
To: dga@portlandmaine.gov

Good morning. Confirming my desire to have my home at 44 Monument Street included in HPD.
Thanks.
Christopher Akerlind
44 Monument St

Attachment 5
PC13

Deb Andrews <dga@portlandmaine.gov>

Inclusion in historic district

1 message

JoAnn Dowe <joythroughhealing@gmail.com> Sun, Jul 28, 2019 at 1:26 PM
To: dga@portlandmaine.gov

Hello Deb,

I live at 28 Waterville Street, a small yellow cape-style single family, and I was looking over the map and was surprised to see that my house was not included in the proposed designation. The overlay stops two houses before mine on Waterville, which seems strange considering it continues all the way down Waterville on the other side. My house is 1850s vintage. It survived the fire, and urban renewal tear downs. It also shows up on some of the earlier maps of the peninsula. I was a docent at the observatory and could identify my own house on the street. It is still very much the same house it was when it was built here.Looking at the character and design of my neighbors houses, I am thinking it is one of the oldest houses on the street. I would really like it to be included and feel it deserves the protection. It has survived this long as a single-family and that in itself is pretty amazing.

Thank you,

JoAnn Dowe,
28 Waterville Street
Cell: 2073317707

Sent from my iPhone

Portland Maine

Deb Andrews <dga@portlandmaine.gov>

Fwd: Munjoy Hill Historic District

1 message

jmy <jmy@portlandmaine.gov> Thu, Aug 8, 2019 at 8:12 AM
To: Deb Andrews <dga@portlandmaine.gov>

On Wednesday, August 7, 2019 at 8:19:19 AM UTC-4, Julius Ciembroniewicz wrote:

> Dear Planning Board --
>
> I'm writing in connection with the Munjoy Hill Historic District. If development continues as is, very soon the developers will have obliterated the historic integrity of Munjoy Hill. The City can no longer bury its head in the sand. **Accordingly, please vote YES to support the Munjoy Hill Historic District.**
>
> Sadly the City of Portland is giving its historic integrity away, brick by brick, to developers that are taking a mile when they receive an inch (or a favor) from the City. The developers only care about $ and themselves; it is the City's Planning Board that is responsible for protecting the City's waning identity and its historic integrity. Otherwise, at the rate things are going, it won't be much of a charming City anymore.
>
> Projects like 9 Moody Street --- where a rich developer destroyed an existing house and replaced it with a 4 story square monster personal residence for himself that obliterated the views and integrity of Morning and Moody Street -- have no place in historic Munjoy Hill.
>
> Thanks for the important work that you do. Please vote YES to the historic district on Munjoy Hill.
>
> Julius Ciembroniewicz
> 55 Morning Street, Unit 4-2
> Portland, ME 04101

Portland Maine via Google's cloud | Deb Andrews <dga@portlandmaine.gov>

Fwd: 122 North Street

1 message

jmy@portlandmaine.gov <jmy@portlandmaine.gov> Thu, Aug 8, 2019 at 8:15 AM
To: Deb Andrews <dga@portlandmaine.gov>

On Wednesday, August 7, 2019 at 12:12:56 PM UTC-4, Lindsay Steven Mann wrote:

> Hello, my name is Lindsay Mann. My wife and I are the owners of 122 North Street in Munjoy Hill. I was recently notified that our house is part of the zone nominated to be a Historic District.
>
> While we have every intention of preserving the historical and architectural details of our home, it strikes me as arbitrary and unfair that our house is included in this zone. **We are surrounded on all four sides by construction that would not be included.** To the north are the Island View apartments - a large complex of apartment buildings (70 units) built in 2002. Abutting us to the south is Munjoy Heights - a group of condominiums built in 2015. To the east is a "non contributing building," which happens to be pretty neglected (paint peeling, shingles and siding falling off the building, etc.) To the west is a similar building not included in the proposal. When Greater Portland Landmarks made their recommendation, it stopped at Walnut Street. We would literally be the only house on the block that is designated historical - an island of one house.
>
> We are new homeowners with two small children hoping to attend the East End Community School. We bought this house because we treasure the historical character and architectural craftsmanship. We have every intention of preserving that history, as we wish for the rest of Munjoy Hill, but we find it unreasonable that the city should single us out.
>
> Do you have any suggestions for who I should talk to or angles I haven't considered?
>
> Thank you!
>
> Lindsay & Susan Mann
> 122 North Street

PC16

Portland Maine | Yes. Google's got it here

Deb Andrews <dga@portlandmaine.gov>

Fwd: Historic District = White District

1 message

jmy <jmy@portlandmaine.gov> Thu, Aug 8, 2019 at 8:14 AM
To: Deb Andrews <dga@portlandmaine.gov>

On Wednesday, August 7, 2019 at 8:51:30 PM UTC-4, Alexis Santos wrote:

> Dear community,
>
> I'm a resident of Munjoy Hill and so will live with the consequences of the seemingly well-intended movement of creating a historic district.
>
> As much as I like the appearance of historic districts I think trying to preserve or create them is misguided, particularly if the aim is to enrich the community.
>
> The equation that I keep seeing in my mind is the following:
>
> - **Historic District = White District**
>
> Keeping Munjoy Hill and the East End as is, is to support the property owners, like me, in their current comfortable status. Folks that benefited from their white privilege typically favor holding on to the way things were, or keeping the status quo (ie historic district).
>
> I understand that many are frustrated by the design choices of some of the new developments, but this can be better regulated.
>
> If anything, I think we should go the way of Minneapolis, and get rid of single family zoning which has kept much needed housing out of reach of a growing and diverse community.
>
> **Minneapolis, Tackling Housing Crisis and Inequity, Votes to End Single-Family Zoning**
> https://www.nytimes.com/2018/12/13/us/minneapolis-single-family-zoning.html
>
> **Minneapolis Confronts Its History of Housing Segregation**
> By doing away with single-family zoning, the city takes on high rent, long commutes, and racism in real estate in one fell swoop.
> https://slate.com/business/2018/12/minneapolis-single-family-zoning-housing-racism.html
>
> https://www.politico.com/magazine/story/2019/07/11/housing-crisis-single-family-homes-policy-227265
>
> Let things change, unless you are served by keeping things as they are.
>
> If you really want Portland to do something worth remembering, promote *more* ways for the city to become diverse and inclusive, *not less*.
>
> With good wishes,
> Alexis

Historic Preservation Board
City of Portland, Maine

August 22, 2019

Dear Members of the Historic Preservation Board,

I am writing you to request that my house at 7 Lafayette Street be included in the proposed Munjoy Hill Historic District or that it be designated as a historic landmark.

The house at 5-7 Lafayette St. was built between 1849 and 1851, making it one of the oldest still standing dwellings in the north eastern quadrant of the hill (east of North Street and north of Congress St). The date range for the house of 1849 – 1851 comes from several primary sources: City street records show that Lafayette Street was laid out (accepted) on February 8th 1849. The 1924 City Assessors card for 7 Lafayette listed the house a being 75 years old (hence 1849). The date of 1851 comes from a map of Portland published in 1851 by H. F. Walling. This map shows building footprints that fit with 7 Lafayette and the house behind (#99 Congress St). The actual date for 7 Lafayette may be closer to 1849 as commercial maps such as the Walling map of Portland would have taken several years between conception and publication – surveying, drawing, and printing.

As noted in the City's "Munjoy Hill Architectural Development & Context Statement" (April 2019), this house is one of only a few buildings that have survived from the early settlement on Munjoy Hill.

Architecturally the house is a traditional side gable cape and has retained a great degree of the architectural features as seen in the 1924 assessor's photo. From this photo we can see that some changes likely took place during the 75 years following its construction in 1849. It can be assumed that the dormers on the front roof and the large floor to ceiling ground floor windows were added some time in the fourth quarter of the 19th century. In the 95 years following the 1924 photo, no drastic changes to the street view of house have been made. At some point the clapboard siding was covered with wood shingles and the wooden sash double hung windows were replaced with single pane double hung PVC windows. Also the original chimney was removed, leaving only the late 19th century chimney that was added when the steam central heating was installed.

Since 1999, when my wife and I purchased the house, we have replaced the single pane windows with mullioned double glazed, double hung windows. I have also rebuilt the decorative door surround to match the Greek revival door surround as seen in the 1924 photo. Please note that the skylight between the dormers, though slightly larger, replaced one that can be seen in the 1924 photo. The only significant change that we have made to the house is the addition of a shed dormer on the back roof of the house. I intentionally kept the original rear roof line to retain the architectural form of the house. The rear dormer can only be seen from the side of the house. When this work was undertaken we also had the front roof replaced. As part of this work the shingles on the front dormers were replaced with clapboards. It is our intent at a later date to remove the shingles on the rest of the house and replace the clapboards and corner boards as seen in the 1924 assessor's photo.

I would like to note that the 1869 Portland Directory shows a "Rowe Henry, architect," as living at 7 Lafayette Street. Henry Rowe (1812-1870) was an Irish architect who immigrated to the US around 1840. After working in Boston and New York, he moved to Portland and set up shop in 1845. He specialized in Gothic Revival Architecture. He is noted as having designed the John J. Brown house that is located at 387 Spring Street, and the S.L. Carleton House (Carleton's Castle) a European "petit chateau" that stood at 118 Congress St from ca. 1850 until 1914 when it was demolished.

If protected the house would not be alone on this part of Lafayette Street as the building at 103 Congress Street/corner of Lafayette St. has been proposed as a landmark. Further, the land locked house at 99 Congress St. is of equal age. These three buildings would make a small historic grouping within the B1 zone on the top of the hill.

Best Regards

George and Uschi Carhart



The house at 7 Lafayette Street in 2019

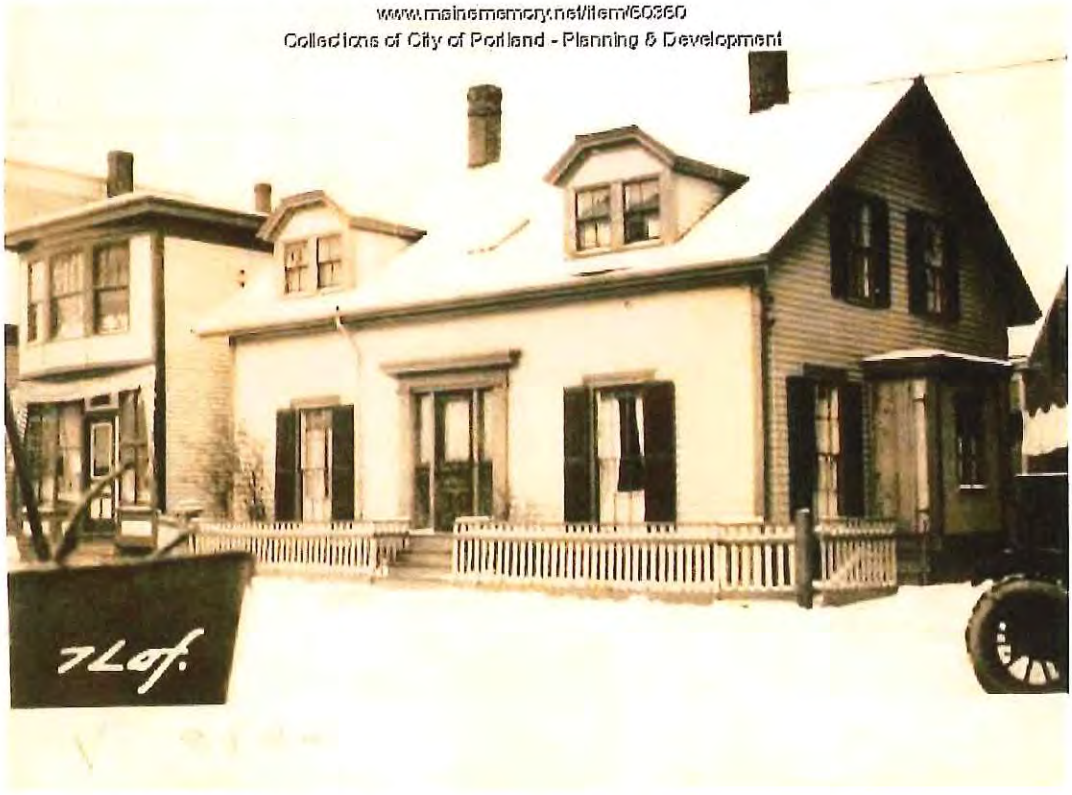

The house at 7 Lafayette Street in 1924

1924 Portland Tax Records: 5-7 Lafayette Street, Portland, 1924

Portland, Maine

Assessment 19

Name
Owner O'Brien John
Street Lafayette No. 5-7
Block 74 Lot 12
Use of Bldg. Name
Tenants and Rooms
Rentals
Age
Condition of Repair

Class	Exterior	Plumbing
Bungalow	Clapboards	Common
Single House	Siding	Individual
Two family	Shingles	Open
Three family	Stucco	Set tubs
Apartment	Paper	
Store Building	Tapestry Brick	Finish
Office "	Com. Brick	Plain
Factory "	Galv. Iron	Hardwood
Storage "	Stone	
Stables	Terra Cotta	Halls
Garage, private	Concrete	Wood
Garage, public		Terrazzo
Theatre	Heating	Marble
Club House	Stove	
Cottage	Furnace	Roof—Roofing
	Hot Water	Shingle
Foundation	Steam	Slate
Brick		Gravel
Stone	Light	Prepared
Concrete	Oil	Asbestos
Pile	Gas	Flat
	Electric	Hip
Basement		Gable
Full	Floor	Dormers
Cement Floor	Common	
Waterproof	Hardwood	Windows
	Re-Concrete	Plain Glass
Construction	Concrete Slab	Wire Glass
Frame	Waterproof	Shutters
Brick		
Tile	Ceiling	Miscellaneous
Blocks	Plaster	Elevator
Stucco	Metal	Sprinkler
Re-Concrete	Panelled	Fire Escape
Mill	Rough	Refrigerator
Steel Frame		Vacuum Cleaner
		Safes and Vaults
		Telephone Equip.

Ground Area Height
Cubic Feet Unit cts.
Utility Dep.
Dep. Per cent.
Sound Value,

Land 2519 Corner Interior Alley
Front Depth ft

COMPUTATION

Area	Multiplier	Coefficient

Year	Unit	Coefficient	Land Value
19			



Surveyed by

(Remarks on other Side)

Remarks about Buildings

Remarks about Land



Remarks about Personal Property

CITY OF PORTLAND, MAINE
ASSESSORS DEPARTMENT

CHART	BLOCK	
3	Building Volumes Checked	
4	Building Values Placed	
5	Building Values Extended	1923
6	Land Only Questionable Made	
7	Land Values Placed	
8	Land Values Extended	
9	Compared with 1923	
10	Personal Property Added	

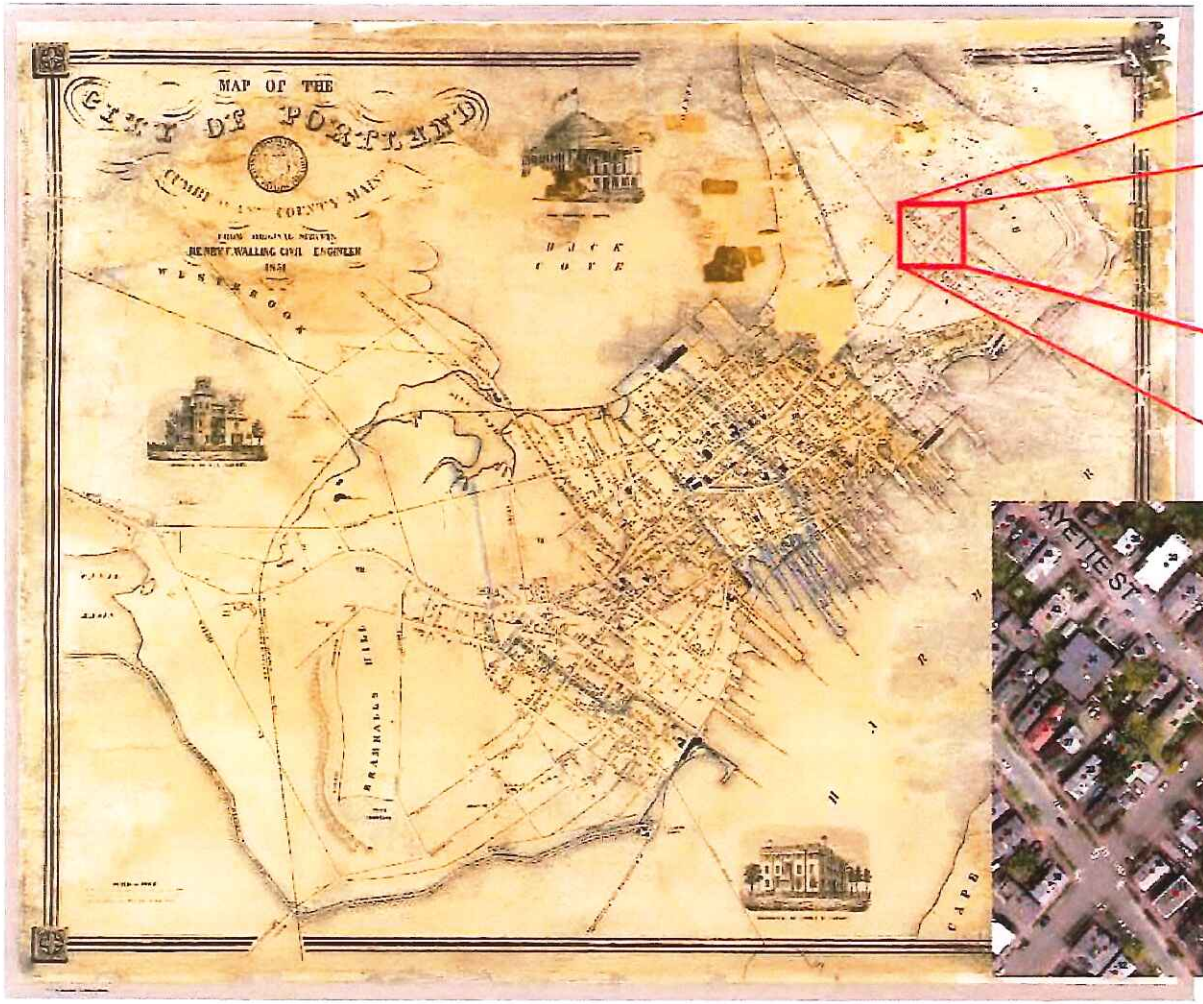

H. F. Walling, 1851

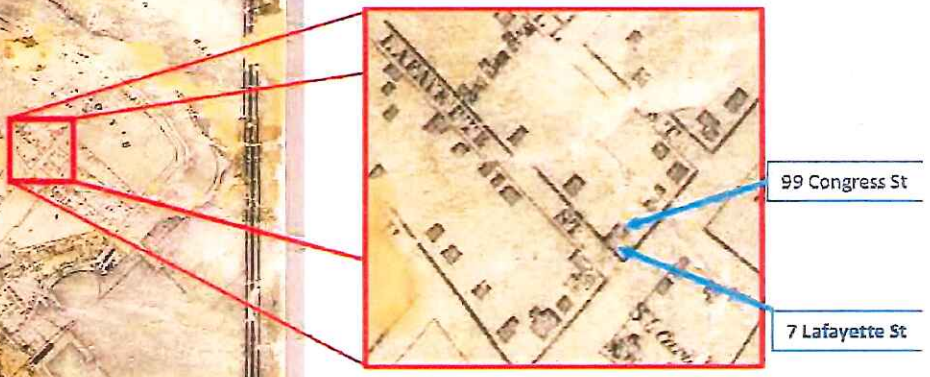



2018 imagery

Montreal and Willis Streets: proposed addition to potential North Street Historic District

North Street Historic District currently under study = ——————

Proposed Montreal and Willis Streets addition =. — — — — — —



Portland Maine

Deb Andrews <dga@portlandmaine.gov>

Historic Designation Munjoy Hill

1 message

Henry family <cjechenry@yahoo.com> Fri, Aug 30, 2019 at 10:25 AM
Reply-To: Henry family <cjechenry@yahoo.com>
To: Belinda Ray <bsr@portlandmaine.gov>, "sthibodeau@portlandmaine.gov" <sthibodeau@portlandmaine.gov>, Pious Ali <pali@portlandmaine.gov>, "bbatson@portlandmaine.gov" <bbatson@portlandmaine.gov>, "kcook@portlandmaine.gov" <kcook@portlandmaine.gov>, "jcosta@portlandmaine.gov" <jcosta@portlandmaine.gov>, "jduson@portlandmaine.gov" <jduson@portlandmaine.gov>, "nmm@portlandmaine.gov" <nmm@portlandmaine.gov>, "estrimling@portlandmaine.gov" <estrimling@portlandmaine.gov>, "planningboard@portlandmaine.gov" <planningboard@portlandmaine.gov>, "jpj@portlandmaine.gov" <jpj@portlandmaine.gov>, "dga@portlandmaine.gov" <dga@portlandmaine.gov>

Hello,

Attached you'll find a letter from 28 neighbors on the Hill who are opposed to any Historic Designation on the Hill.

As Jeff Levine stated in one of last summer's preliminary public sessions, "if the people on the Hill do not want a historical district, we won't do it." Well, more residents have signed a letter in opposition of historic designation than those who submitted a letter for it.

Could you please circulate and otherwise treat this letter with the same level of attention that the pro HD residents received? I'm unsure of the process to circulate (and to whom) so cc'd a number of city staffers above.

Last year, Jeff also committed that the Hill would be surveyed by the City. It was not. Instead, local surveying/polls have been completed, letters circulated, etc. There is a silent majority forming who oppose this direction since information is getting out to them other than Deb Andrews presenting at workshops.

Councilwoman Ray, when we met a few weeks ago, you described this matter as a 'twofor'....meaning, you packaged HD as a second step following R6. Why the rush? There has not even been time to let the R6 settle to see if it is the right business decision vs adding more regulation on top of new, unevaluated regulations.

Only 1 building has come down since the implementation of the R6. Additionally, in Deb Andrew's report, 85% of homes in this district are contributing homes (in the most developed part of the Hill.) That shows us that there is not an issue here maintaining structures. Munjoy Hill historically paints a picture of a diverse evolving neighborhood that should be allowed to continue it's historical pattern.

Opposition is now forming not just within Munjoy Hill but the impact it will have on the city overall. Organizations, architect firms, affordable housing, urban planners, business owners, families, young millennials are all concerned about stricter zoning and how HD regulation is negatively effecting affordable housing, economy, diversity, and positive growth in our working city.

Any timelines set with the Planning Board or Council regarding this matter?

Thank you,

Carle Henry

---

3 attachments



Page 2 of Signatures.jpg
378K



Signatures page 1.jpg
709K

Neighbor Signed Letter to DA.docx
137K

Thank you very much,

Printed Name: AMY SMITH
Property Address: 17 KENDALL ST #3

Printed Name: Tim wells
Property Address: 33 Montreal

Printed Name:
Property Address: 50 Saint Lawrence St.

Printed Name: LORI J. ROUNDS
Property Address: 47 MONUMENT ST

Printed Name: Timothy Mayo
Property Address: 47 Monument St.

Printed Name: Johanna Henry
Property Address: 50 St. Lawrence St

Printed Name:
Property Address: 64 E. Perm

Printed Name:
Property Address: 13-21 Elm st. (Thomaston, Portland)
62 Waterville St)
102-104 Mountain St

Printed Name: DANIEL J. HALEY, JR
Property Address: 140 EASTERN PROM
(owner 138 Eastern Prom)

Printed Name: MARKUS Miller
Property Address: 17 Atlantic St

Printed Name: SARAH CUSHMAN
99 BECKETT ST., 2ND FL

Printed Name:
Property Address: 73 Atlantic St.

Printed Name: John Mahoney
Property Address: 73 Atlantic Street

Printed Name:
Property Address: 73 Atlantic St.

Printed Name:
Property Address: 32 Montreal

Printed Name:
Property Address: 32 Montreal

Printed Name: CHRISTOPH GELFAND
Property Address: 33 ATLANTIC ST

Printed Name: Michael Unterhalter
Property Address: 81 Quebec #4

Printed Name: Caitlin Ward
Property Address: 81 Quebec St #1

Printed Name:
Property Address: 84 Quebec Street

Printed Name:
Property Address:
59 LAFAYETTE ST.
PORTLAND, ME 04101

Printed Name:

Property Address:
Andrew Ray
Printed Name: Andrew Ray
Property Address: 36 Quebec St.

Printed Name: Ed Gillis
Property Address: 24 Montreal St

Printed Name: Marla Rankin
Property Address: 24 Montreal St

Printed Name:
Property Address: 37 Montreal

Printed Name:
Property Address:

Printed Name:
Property Address:

Printed Name:
Property Address:

Printed Name:
Property Address:

Printed Name:
Property Address:

Printed Name:
Property Address:

Printed Name:

Property Address:
Printed Name: 33 Montreal St

Property Address:
Printed Name: 33 Montreal St

Property Address:

Printed Name:
Property Address:

Printed Name:
Property Address:

Printed Name:
Property Address:

Printed Name:
Property Address:

Printed Name:
Property Address:

Printed Name:
Property Address:

Printed Name:
Property Address:

Printed Name:

August 31, 2019

To Deb Andrews, Chair Sheridan, and the esteemed members of the Portland Historic Planning Board,

I am writing to express my concerns about the proposed Historic District designation being considered for Munjoy Hill. I've been living on Munjoy Hill for over 20 years. Back then people told me not to buy a home in this neighborhood. I had moved from Seattle, WA, where I had been trying, unsuccessfully, to buy a home. Prices were rising rapidly, offers were often well over the asking price, and people from "away" (California) had a lot more to spend on real estate.

When I arrived in Portland I was pleased to find an environment where I could work hard, save money, and afford to buy a 3 unit home, with the help of the City's New Neighbors program. One thing that made Portland so special back then was that young adults like myself, of modest means, where able to take a stake in our neighborhoods, contribute to our communities, and help foster the dynamic place we have today. I fear we are losing this Portland, and Munjoy Hill is a perfect case study of how we are turning traditionally diverse neighborhoods into exclusive retreats for the well-to-do. Our loss will not only be the socio-economic diversity that a vibrant city needs, but the diminished pool of younger generations, families, young professionals, the energy of tomorrow, that our city can draw upon to continue its rich legacy. This is the principal demographic challenge we should be planning for. The proposed historic district in one of the our traditionally most diverse and population rich neighborhoods will only exacerbate this challenge.

I love the architectural legacy and diversity of Munjoy Hill. It is rich, vibrant, and unthreatened. The City's own data indicates that 85% of the structures are conforming to historical standards. There is no imminent threat like there was in the days of urban renewal. Furthermore, the Hill is already protected. There has only been one house torn down since the Conservancy District was established in 2018. This district was created to balance the needs for preservation and development. It is only prudent to collect data on its long-term effectiveness and allow a five year period to understand the effects of its protections before further zoning changes are considered.

Historical Districting on Munjoy Hill is antithetical to Portland's goal of growing and creating housing choices for all residents. It is a given that a historic district will increase the cost of housing on the Hill, and thus push up demand for housing in other neighborhoods, at the very time when the region is experiencing a well documented housing crisis. As a result, the historic district will create barriers for families to move to the neighborhood, and indirectly, to the rest of the City, denying Portland of the next generations we will need for sustained economic and cultural vibrancy. Socio-economic diversity will be limited, forcing much needed service workers further out into the surrounding regions, creating greater demands on our roads and local ecology. The Hill will be even more exclusive, captured in a nostalgic past for those wealthy enough to get in. That's not the Munjoy Hill I love.

Vibrant neighborhoods grow and change over time. Even the purported "Golden Age" of Portland was the result of a gradual amalgamation of architectural and design styles, with Italianate features added to Greek Revival homes, for example. The historic district will prevent further architectural innovation of existing properties. Historic district regulations will impose greater limits and controls on what homeowners can do with their properties. It adds layers of bureaucracy and review on what is already a cumbersome, byzantine property improvement process. Finally, the historic district places greater burdens on increasing the number of units in a building. The historic district designation is not congruent with our goals of strengthening housing options for families and the middle class, nor fostering a socio-economically diverse community, as outlined in our Comprehensive Plan.

To close, the designation of a historic district on Munjoy Hill will have a number of consequences that we should fully research and understand first. Policy makers and the public should be informed of the impacts on affordable housing, the rental market, property sales, applications for renovations and new construction, and other effects related to the goals of the Comprehensive Plan. It is essential that City staff undertake this initial research and present performance data from existing historic districts here and in other comparable communities. Taking action without this critical information is irresponsible. In the meantime, the temporary designation should be lifted. I ask for your support in halting the process for establishing a historic district on Munjoy Hill, removing the temporary HD status, and directing staff to complete a wholistic study to better understand the far-reaching impacts of HD designation. It is only right that decision makers and the public fully understand the tradeoffs that come w/ a Munjoy Hill historic district and can weigh the consequences. Sound public policy must be based on informed decisions.

Thank you for your service,

Markos Miller
17 Atlantic St
Portland, ME
04101

Google Groups

Historic District on Munjoy Hill

Peter Murray <pmurray@gwi.net> Sep 2, 2019 10:10 PM
Posted in group: **Planning Board**

Dear Ms. Andrews, City Manager Jennings, members of the Planning Board, and members of the City Council -

Here's hoping that this is one of many communications you are receiving in support of the prompt and comprehensive designation of a Historic District on Munjoy Hill.

The unanimous action of the Historic Preservation Board to nominate a district covering about one third of the historic Hill neighborhood is a great start. Now is the time for the City to show its residents as well as would-be developers that its historic neighborhoods are precious civic assets that merit careful stewardship and preservation for the good of the entire City over the medium and long term.

We will not be able to make the upcoming workshop on Wednesday, 9/4 before the Historic Preservation Board. This e-mail is intended to convey our strong support for the district under consideration and our hope that it might be enlarged. We live within the boundaries of the district currently under consideration. The protection afforded by Historic District status is very important to preserving the value of our property from being adversely affected by development efforts of the kind taking place at 33-37 Montreal Street.

We thank you for your prompt and decisive action on this matter.

Sincerely,

Peter L. Murray
Deborah D.Murray
104 North Street
Portland, ME 04101
pmurray@gwi.net

Google Groups

Make Munjoy Hill an Historic District

Liz Hays <lizchays@gmail.com> Sep 3, 2019 6:10 PM
Posted in group: **Planning and Urban Development**

Dear City of Portland Planning Board

I am a year round resident of Munjoy Hill for the past 2 years. I live in a restored 1864 home at 107 North Street which would be on the edge of proposed the historic district.

I am strongly in favor of making Munjoy Hill an historic district. I feel the historic character and continuity of this character is important to the neighborhood's appeal to maintain long term residents and prospective residents as well as maintaining the cities historic charm. I also feel it will help maintain some of the multi- units that will keep the neighborhood housing affordable.

I would be in favor of expanding but not decreasing the proposed historic district area.

Thank you for your consideration of my comments.

Liz Hays
107 North Street
Portland, ME 04101

Google Groups

Munjoy Hill Historic District

Markos Miller <markossmiller@hotmail.com> Sep 3, 2019 11:14 AM
Posted in group: **HIstoric Preservation**

Hi Deb,

I hope you had a wonderful summer. I'd like to submit the attached letter to the HPB for inclusion in materials for the Sept 4 discussion about the proposed Munjoy Hill historic designation district.

All the bests,

Markos

August 31, 2019

To Deb Andrews, Chair Sheridan, and the esteemed members of the Portland Historic Planning Board,

I am writing to express my concerns about the proposed Historic District designation being considered for Munjoy Hill. I've been living on Munjoy Hill for over 20 years. Back then people told me not to buy a home in this neighborhood. I had moved from Seattle, WA, where I had been trying, unsuccessfully, to buy a home. Prices were rising rapidly, offers were often well over the asking price, and people from "away" (California) had a lot more to spend on real estate.

When I arrived in Portland I was pleased to find an environment where I could work hard, save money, and afford to buy a 3 unit home, with the help of the City's New Neighbors program. One thing that made Portland so special back then was that young adults like myself, of modest means, where able to take a stake in our neighborhoods, contribute to our communities, and help foster the dynamic place we have today. I fear we are losing this Portland, and Munjoy Hill is a perfect case study of how we are turning traditionally diverse neighborhoods into exclusive retreats for the well-to-do. Our loss will not only be the socio-economic diversity that a vibrant city needs, but the diminished pool of younger generations, families, young professionals, the energy of tomorrow, that our city can draw upon to continue its rich legacy. This is the principal demographic challenge we should be planning for. The proposed historic district in one of the our traditionally most diverse and population rich neighborhoods will only exacerbate this challenge.

I love the architectural legacy and diversity of Munjoy Hill. It is rich, vibrant, and unthreatened. The City's own data indicates that 85% of the structures are conforming to historical standards. There is no imminent threat like there was in the days of urban renewal. Furthermore, the Hill is already protected. There has only been one house torn down since the Conservancy District was established in 2018. This district was created to balance the needs for preservation and development. It is only prudent to collect data on its long-term effectiveness and allow a five year period to understand the effects of its protections before further zoning changes are considered.

Historical Districting on Munjoy Hill is antithetical to Portland's goal of growing and creating housing choices for all residents. It is a given that a historic district will increase the cost of housing on the Hill, and thus push up demand for housing in other neighborhoods, at the very time when the region is experiencing a well documented housing crisis. As a result, the historic district will create barriers for families to move to the neighborhood, and indirectly, to the rest of the City, denying Portland of the next generations we will need for sustained economic and cultural vibrancy. Socio-

economic diversity will be limited, forcing much needed service workers further out into the surrounding regions, creating greater demands on our roads and local ecology. The Hill will be even more exclusive, captured in a nostalgic past for those wealthy enough to get in. That's not the Munjoy Hill I love.

Vibrant neighborhoods grow and change over time. Even the purported "Golden Age" of Portland was the result of a gradual amalgamation of architectural and design styles, with Italianate features added to Greek Revival homes, for example. The historic district will prevent further architectural innovation of existing properties. Historic district regulations will impose greater limits and controls on what homeowners can do with their properties. It adds layers of bureaucracy and review on what is already a cumbersome, byzantine property improvement process. Finally, the historic district places greater burdens on increasing the number of units in a building. The historic district designation is not congruent with our goals of strengthening housing options for families and the middle class, nor fostering a socio-economically diverse community, as outlined in our Comprehensive Plan.

To close, the designation of a historic district on Munjoy Hill will have a number of consequences that we should fully research and understand first. Policy makers and the public should be informed of the impacts on affordable housing, the rental market, property sales, applications for renovations and new construction, and other effects related to the goals of the Comprehensive Plan. It is essential that City staff undertake this initial research and present performance data from existing historic districts here and in other comparable communities. Taking action without this critical information is irresponsible. In the meantime, the temporary designation should be lifted. I ask for your support in halting the process for establishing a historic district on Munjoy Hill, removing the temporary HD status, and directing staff to complete a wholistic study to better understand the far-reaching impacts of HD designation. It is only right that decision makers and the public fully understand the tradeoffs that come w/ a Munjoy Hill historic district and can weigh the consequences. Sound public policy must be based on informed decisions.

Thank you for your service,

Markos Miller

17 Atlantic St

Portland, ME

04101

Markos Miller
17 Atlantic St
Portland, ME
04101
(207) 807-2681

September 4, 2019

To: Historic Preservation Board and Others

As a long time Munjoy Hill resident I have enjoyed its natural beauty, richness of humble homes and family living. The Hill has traditionally been an affordable setting for students, young families and members of the working class. The current atmosphere of exploitive development threatens affordable housing, discourages young families and destroys the precious architectural history of the Hill.
I support the proposed Historic District for the Hill, however the current plan is a puzzle with missing pieces. It leaves out many areas worthy of inclusion and should be broadened to protect whole neighborhoods, perhaps the entire R6 zone.
In the many HPB meetings I have attended I have spoken on behalf of developing a Munjoy Hill Historic District and have sent in documentation materials relating to my 1855 House at 12 Montreal Street. Once again I repeat my request that my house and the entire South side of Montreal Street be included in Historic Preservation Plan.

Respectfully,
Carol M. Connor
12 Montreal Street
Portland, Maine 04101
207 232 2265

Google Groups

Yes, please, on Munjoy Hill Historic District

Berry Manter <berrymanter@yahoo.com> Sep 4, 2019 7:21 AM
Posted in group: **Planning Board**

Dear Deb Andrews, Planning Board, City Mgr, and City Councilors,

While this is not my first letter of support for the proposed Munjoy Hill Historic District, I write again to urge the MHHD proposal be fully supported by all given the success of Portland's other historic districts as well as the areas of Portland that would better benefit from cautious and well placed development.

I say this in no small part knowing that the Hill is one of the important "faces" of this city to both those who reside here as well as those who visit from local neighborhoods and from away. I say this in no small part knowing that my own modest Victorian building on its exceptional piece of property looking over the park with its exceptional gardens, as well as so many of my neighbor's properties would not survive and quickly be replaced at a great loss to the face of Portland…

Sincerely,
Berry Manter
Portland

Portland Maine | Yes: Google's good here

Jennifer Munson <jmy@portlandmaine.gov>

Fwd: Letter for the HP board

Deb Andrews <dga@portlandmaine.gov> Tue, Oct 1, 2019 at 5:22 PM
To: Jennifer Munson <jmy@portlandmaine.gov>

please add to public comment for Munjoy HIll

---------- Forwarded message ---------
From: **nini mc manamy** <ninimaine@aol.com>
Date: Tue, Oct 1, 2019 at 3:07 PM
Subject: Letter for the HP board
To: <dga@portlandmaine.gov>

Chair Sheridan and members of the HIstoric Preservation Board:

I am writing to urge you to support the Munjoy Hill Historic District with all the protections provided under the city's Historic Preservation Ordinance—in particular, the provision for impact review of any structures or land use changes that fall within 100 feet of an identified Historic District. The pattern of recent development on the Hill has been one of large popup structures in midblock, which interrupt the streetscape and which tend to have a negative impact on the entire block.
Recently, this board considered a project proposal at 33-37 Montreal St. Having waited out the one year demolition delay required by the Munjoy Hill Conservation Overlay zone, the developers have recently proposed a different structure from the project reviewed by this board just a few weeks ago. During the planning board review, the planning board accepted the staff's identification of that area of Willis and Montreal Streets to be a "transitional" neighborhood. We assume this means that block is not characteristic of the streetscape lying across the street from it, and therefore exempt from the compatibility design standard.
This sets up a situation where there will be steady creep into traditional neighborhoods, as each new nonstandard building creates a new transitional block next door.
The 33-37 Montreal project is one of those popup structures, towering over its neighbors, and within 100 feet of the pending Historic District. This is apparently not a consideration for the planning board. Nevertheless, that proximity provides us, the neighbors, with a valuable opportunity to open a discussion about the impact on the streetscape. We can see how important the 100 foot perimeter for review would be to protect against future project impaces.
Finally, the Munjoy Hill Overlay Zone provides an exemption from the current design standards for buildings over 10,000 square feet, and contains no prohibition on combining lots to create projects of that size—as was done for 33-37 Montreal.
Our neighborhood is in part special because of the many small lots. A Historic District with a 100 foot sweep would provide some protection from the impact of large projects which consolidate small landholdings.

Thank you for all your dedicated and careful work to date on the Hill.

Sincerely,

Jean (Nini) McManamy
10 Willis St.
October 1, 2019

Sent from my iPad

--
Deb Andrews
Historic Preservation Program Manager
City of Portland
389 Congress Street
Portland, Maine 04101
(207) 874-8726

Portland Maine | Yes. Google's good here.

Jennifer Munson <jmy@portlandmaine.gov>

Fwd: Munjoy Hill Historic District Comments

Deb Andrews <dga@portlandmaine.gov> Tue, Oct 1, 2019 at 2:02 PM
To: Jennifer Munson <jmy@portlandmaine.gov>

Munjoy Hill public comment

---------- Forwarded message ---------
From: **Mike Hoover** <chzstk@gmail.com>
Date: Tue, Oct 1, 2019 at 5:38 AM
Subject: Munjoy Hill Historic District Comments
To: Deb Andrews <dga@portlandmaine.gov>

Hi Deb -

I strongly support the designation of a Historic District for Munjoy Hill.

I would like to request that my home, located at 40 Melbourne, be included in the proposed Historic District.

Consistent with the nomination criteria outlined in the National Historic Preservation Act (NHPA), and the historical analysis completed for the Munjoy Hill Historic District, I believe that the HD needs to be expanded to incorporate the intent of a Historic District. I request that the distinct includes the portion of Munjoy Hill between Congress Street, North Street, Walnut Street, and the Eastern Promenade. This boundary is consistent with the NHPA intent of a HD to encompass the broad pattern of historical development within a HD boundary.

Thank you.

Michael Hoover
40 Melbourne

--
Deb Andrews
Historic Preservation Program Manager
City of Portland
389 Congress Street
Portland, Maine 04101
(207) 874-8726

Portland Maine | Yes. Google's good here.

Jennifer Munson <jmy@portlandmaine.gov>

Fwd: 65 Saint Lawrence Street -contributing designation

Deb Andrews <dga@portlandmaine.gov> Tue, Oct 1, 2019 at 2:03 PM
To: Jennifer Munson <jmy@portlandmaine.gov>

Munjoy Hill public comment

---------- Forwarded message ---------
From: **Liv Chase** <livchase@yahoo.com>
Date: Mon, Sep 30, 2019 at 5:24 PM
Subject: 65 Saint Lawrence Street -contributing designation
To: dga@portlandmaine.gov <dga@portlandmaine.gov>
Cc: Brent Adler <brentadler@gmail.com>

Dear Deb Andrews,
Brent and I just received your notice in the mail in regards to 65 Saint Lawrence Street. We are shocked by the news presented in this letter and also unclear as to why it was sent out 30 days after a decision was made. We are strongly opposed to being a contributing building in the new proposed historic district. We attended the first meeting for the proposed historic district and our building was non-contributing. Prior to the first meeting, the city had every opportunity to assess and decide on which buildings were to be contributing and which ones were not. 65 Saint Lawrence Street has been significantly altered and it does not represent any form of historic architecture. A tenement style building that provided housing for workers does not classify a building as historic nor does it contribute to the character of the district. Please let us know how we can have this designation removed.
Regards,
Liv Chase and Brent Adler

--
Deb Andrews
Historic Preservation Program Manager
City of Portland
389 Congress Street
Portland, Maine 04101
(207) 874-8726

Google Groups

10/2/2019 - Historic Preserv. Board-3rd Workshop for Proposed Munjoy Hill Historic District

Karen Snyder <karsny@yahoo.com> Oct 1, 2019 1:03 PM
Posted in group: **Planning and Urban Development**

Dear Historic Preservation Board Members and Deb Andrews,

I am presenting a recently initiated petition to show the latest and continued steadfast support for the City's proposed Munjoy Hill Historic District.

So far, it has been signed by over **80 Munjoy Hill residents** which represents **almost 60 Munjoy Hill properties** which specifically support the City proposed Munjoy Hill District.

This petition states the following: ***We the undersigned, support the designation of a Munjoy Hill Historic District which is generally consistent with, and at least as big as that proposed by Portland's Historic Preservation Department.***

Please note this petition statement also includes preserving the zoning 100 foot "boundary" rule surrounding a Historic District.

Please see below petition pages as well as it is attached for documentation purposes.

Regards,
Karen Snyder
72 Waterville St.
Attachment: Proposed_MHHD_Petition_20191001.pdf

Petition: Proposed Historic Preservation District for Munjoy Hill

We the undersigned, support the designation of a Munjoy Hill Historic District which is generally consistent with, and at least as big as that proposed by Portland's Historic Preservation Department.

#	Address	Name (PRINT ONLY)	Signature	Email Address	Date	"X" if Owner
1						
2	11 Munjoy St.	Martica Douglas			.com 09-29-19	
3	81 North St.	Beth Snyder			com	✓
4	28 St. Lawrence	Maggy Wolf			09-28-19	
5	11 MORNING ST.	R. JOHN WIESTHOFF			9/28/19	X
6		Martica Saeuh				
7	28 St. Lawrence				gmail.con	X
8	91 BECKETT ST.	Catherine Waycott			9/28/19	X
9	76 Watson St.	Nina Miller			9/28/19	X
10	340 Eastern Promenade Unit	45 Janet Springborn			9/28/19	X
11	20 Essex St	Jaye Gorham			9/28/19	X
12	118 Congress St	Sally Oldham			com 9/28/19	
13	105 NORTH St. #1	RALPH CARMONA			9-28 TC	X
14	71 ST. LAWRENCE	JAMES ISAACSON			9-28-19	X
15	29 manning	Jeffrey Davison			9/28/19	X
16	32 North St.	Ann Cowie			2 Gmail	
17	32 North St	James Cowie			9/28/19	X
18	4 Monument Sq 1	Ayriel Chase			9/28	
19	46 Cumberland Ave	Richard Read			9/28/19	✓
20	36 North St	LINDA DILLINGHAM			7/28/19	
21	46 CUMBERLAND AVE	GUNNER LARSDOTTER			9-28-19	
22	89 MORNING St	Steven Goodman			9/28/19	
23	89 MORNING ST.	JANE BAKER			9/28-19	
24	SACO, ME	Nadine Niyindemaho			9-28-19	

Petition: Proposed Historic Preservation District for Munjoy Hill

We the undersigned, support the designation of a Munjoy Hill Historic District which is generally consistent with, and at least as big as that proposed by Portland's Historic Preservation Department.

#	Address	Name (PRINT ONLY)	Signature	Email Address	Date	"X" if Owner
25	3 1/2 SHERBROOK	TERRY AUSTIN			9-28-19	former
26	72 St. Lawrence St	David DiMatteo			9-28-19	former
27	25 High St #301	Susan W Lyons			rm 9-28-19	X
28	76 Watson St.	Steven Teel			com 9/28/19	
29	51 Congress St	M. Jacks			9-28-19	X
30	51 Congress St	G. Jacks			9-28-19	X
31	69 Vaughan St.	MIKE FERRANTE			9-28-19	✓
32	56 North St Apt 203	Justine Denny			com 28 Sep 19	
33	751 North # 209	Jane C. Prochazka				
34	56 North ST	SUSAN Emerson			9/28/19	read
35						
36					9/28/19	NO
37	24 MELLEN ST.	DAVID PRICE			9-28-19	YES
38	190 Munjoy South	Diana Burton/York			9/28/19	~~YES~~
39	53 Breckenridge Ave	Debbie Smith			9/28/19	
40					9/28/19	Yes
41	76 Cumberland Ave	Peter Blackston				
42	292 Eastern Prom	Allison Weiss			9/28/19	NO
43	27 MERRILL ST	WAYNE VALZANIA			9/28/19	YES
44	71 Melbourne St	Kelly Masiello			9/20/19	NO
45	71 Melbourne st	Richard Salois			9/20/19	NO
46	51 MONUMENT ST	SUE YANDELL			9.28.19	YES
47	82 North St	JD Cowie Annie Cowie			9/28/19	Yes
48						

Petition: Proposed Historic Preservation District for Munjoy Hill

We the undersigned, support the designation of a Munjoy Hill Historic District which is generally consistent with, and at least as big as that proposed by Portland's Historic Preservation Department.

#	Address	Name (PRINT ONLY)	Signature	Email Address	Date	"X" if Owner
49	80 Quebec St	K.E. SMITH			28 Sept 19	X
50	63 Melbourne St	apt 1 Leslie Stewart				
51		ROBERT DERRY			9/28	X
52	104 North Street	Peter Mooney			9/30	✓
53	104 NORTH ST.	DEBORAH MacRae				
54	25 Waterville St.	Pamela Day			9/30	✓
55	25 Waterville St.	Michael Petit			9/30	✓
56	12 Montreal St.	Carol M. Connor			9/3/19	✓
57	46 E. Promenade	Berry Manter				
58	88 Beckett St	ENOCH WENSTRAN			9/30/19	X
59	105 North St #1	Vana Carmona			9/30/19	X
60	23 ST. LAWRENCE ST.	G.R. WHITTEN				X
61	40 Melbourne	Michael Hoover			10/1/19	
62	10 WILLIS ST	JEAN McMANNIS			10/1/19	X
63	Apt. 16 North, 101-107 Congress	Barbara Vestal			10/1/19	X
64	39 Waterville St	Mary Westat Castle			10/1/19	X
65	11 St. Lawrence St	Jayne G. Hurley			10/1/19	
66						
67						
68						
69						
70						
71						
72						

Petition: Proposed Historic Preservation District for Munjoy Hill

We the undersigned, support the designation of a Munjoy Hill Historic District which is generally consistent with, and at least as big as that proposed by Portland's Historic Preservation Department.

PORTland

#	Address	Name (PRINT ONLY)	Signature	Email Address	Date	"X" if Owner
121	81 Vesper St	Erna Koch			9-28-19	
122	72 Waterville St, #3	Karen Snyder			9/28/19	X
123	147 Congress St	Marianne Hubert			9/28/19	X
124	147 Congress St	Robert Hubert			9/28/19	X
125	54 Walnut St.	Sarah Goan			9/28/19	X
126	108 Dorset St	George Weatherbee			9/28/19	X
127	74 Grant St #1	Annie Wadleigh			9/25/19	
128	104 Congress ST	John White			9/28/19	
129	104 Congress St	Kerry White Talker			9/28/19	
130	33 Howard	Greg Brown			9/28/19	X
131	79 North	Stephen Booth			9/28/19	X
132	91 Howard St	Allison Rogers			9-28-19	X
133	9 Howard St	Midian Marsoco			9/28/19	X
134	39 Waterville St.	Katy Brewer	Katy Brewer		9/28/19	
135	80 VESPER ST. #3	CATHARINE MOSER	Catharine R Moser		9-28-19	X
136	80 Vesper St, #3	Gregory Moser	Gregory H. Moser		9-28-19	X
137	340 Eastern Prom #142	Jeff von Munkwitz-Smith			9-28-19	X
138	23 GREENWAY DR.					
139	~~55~~ KELLOGG ST. →	JIM BARTER	James H. Barter		9-28-19	X
140	55 Montreal St.	LOIS BARTER	Lois C. Barter		"	X
141	55 Montreal St	Alison Grey	Alison Grey		9/28/19	✓
142		Oliver Murray	Oliver Murray		9/28/19	✓
143						
144						

to: Portland Historic Preservation Board
% Deborah Andrews, Executive Director

October 12, 2018

Dear Chair Sheridan and members of the Board:

Enclosed please find a petition from residents of Willis and Montreal Streets asking your consideration for addition of parts of those streets to the proposed North St Historic District on Munjoy Hill. Specifically we are asking to have that portion of Montreal St not now included in the proposed district (houses at the top of the street have been selected for study as part of the North St District) with the exception of the MacArthur Gardens apartment complex be added to the proposed district.

We have talked with as many of our neighbors as we could. A few properties are absentee-owned. One resident is in a nursing home and unavailable at this time. We understand that public discussion about the impact of a Historic district on the neighborhood is part of the process, and the Board would need to know that most of the residents were in favor. We hope this petition provides some of the evidence you need to initiate a process, and are anxious for the opportunity to ask questions such as, "can I replace my windows?" and "will my children be unable to develop the property?".

We believe Montreal and Willis Streets represent a rare surviving snapshot of what Portland was like before and after the great fire of 1866. The period represented by the homes identified by Greater Portland Landmarks as significant or contributing covers the years from the 1850s to the mid 1930s. 86% of the properties in our proposed district were found last year to be significant or contributing to the historic streetscape of the Hill, and since that time an additional Willis Street property has undergone considerable restoration of its exterior. In its August 15 testimony to the Board, Greater Portland Landmarks described Montreal Street as having what were "urban farmhouses".

The streetscape still includes many small single family homes that housed tradespeople typical of the period. At the bottom of Montreal Street, what is now #12 (built 1860) housed a boatbuilder, and his shop survives today. This house is part of a row of houses dating from the mid-1860s on both sides of the street. Near the top of the street, closer to North, stands a property at #55 which housed a long-surviving greenhouse and nursery business from the 1850s onward. Residents there today report remarkable soil conditions. Across the street at #48 (built 1860) the neighborhood speakeasy was in business during Prohibition and the house still contains a cellar phone and sliding door accessible to customers from the street.

Landmarks has already begun the work of researching the histories behind this unique streetscape, including the social fabric it supported, and we are grateful to them for the history we have drawn upon for this petition. And MacArthur Gardens (1947) at the bottom of Montreal Street, while not built in the period of significance, sits on a piece of land which was integrated into the streetscape with small Italianate dwellings until the great reservoir flood of 1893 washed out four houses and four people lost their lives. The land remained empty until MacArthur gardens was built in 1947 and thus these apartments, in their way, preserve a piece of the history of Montreal Street.

Willis Street enjoys a similar history, with many single family tradespersons homes and three multifamily homes built for rental purposes during the midcentury, at least one by well-known Munjoy Hill developer Moses Gould. The house at #9 is believed to have been a farmhouse when it was built; early city maps showed the property originally extending all the way to the Eastern Promenade. The home still sits on a property covering one entire block on the north side of the street.

Munjoy Hill properties are in danger of teardowns for highly lucrative condominium developments seeking ocean views and proximity to the Old Port. While the new Conservation District can slow the pace of teardowns, it does not have sufficient teeth to prevent outsized and incompatible replacement buildings. Historic District status would help preserve the streetscape and inhibit incompatible development. There is continuous improvement and restoration work underway on the street, and homeowners generally strive for historic compatibility.

Willis and Montreal Streets still house small businesses of the type historically located there. They continue to provide family housing and children are often on the streets. We love our neighborhood and wish to preserve its unique streetscape and the social fabric it supports. We hope you will agree and include it in consideration of the proposed Historic District for Munjoy Hill.

Thank you.
Jean (Nini) Mc Manamy, 10 Willis Street
329-1232

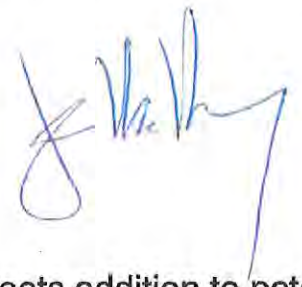

Enclosures:
1. Map of proposed Montreal and Willis Streets addition to potential North Street Historic District
2. Petitions of property owners requesting inclusion in the proposed district

Petition: Historic Preservation District for Munjoy Hill

We the undersigned request the Portland City Council and Planning Dept conserve and preserve the structures that makes Munjoy Hill vibrant by being included in the Munjoy Hill Historic District districts.

	Street Address		Name (PRINT ONLY)	Primary	Signature	Emal Address
1	9 Willis St.	C	Maragret Hillman	Y		
2	10 Willis St.	C	Jean McManamy	Y		
3	20 Willis St.	NC	John Mahoney & Allision Kamar	N		
4	22 Willis St.	NC	Rebecca Dreher	Y		
5	23 Willis St.	NC	Frances McGovern	Y		
6	24 Willis St.	C	Patricia Bleech	Y		
7	28 Willis St.	C	Susan Shaw	Y	Susan Shaw	
8						
9						
10						
11						
12						
13						
14						
15						
16						
17						
18						
19						
20						
21						
22						
23						
24						

Petition: Historic Preservation District for Munjoy Hill

We the undersigned request the Portland City Council and Planning Dept conserve and preserve the structures that makes Munjoy Hill vibrant by being included in the Munjoy Hill Historic District districts.

		Street Address		Name (PRINT ONLY)	Primary	Signature	Emal Address
✓	1	12 Montreal St	C	Carol Conner	Y	Carol Conner	balsamique@live.com
✓	2	16 Montreal St	C	George Libby	Y		
	3	18 Montreal St	C	Linda Douglass	Y		
✓	4	22 Montreal St	C	Vanessa McGrath	y	Vanessa M Grath	
	5	24 Montreal St	C	Edward Gillis & Marta Rankin	y		
✓	6	32 Montreal St	C	Sanjay & Laura Patel	Y		
	7	33 Montreal St	C	St. John's Valley LLC	N		
	8	37 Montreal St	C	Kevin Carter	N		
✓	9	41 Montreal St	C	Kevin Johannen & Meghan Connolly	Y	Kel. for	Kevin@iknow.net
	10	42 Montreal St	C	Liene C. Billings	Y	Liene C Billings	LIENECBILLINGS@GMAIL.COM
✓	11	45 Montreal St	C	James Cole + Hannah	Y		jimkcole gmail com
✓	12	48 Montreal St	C	Cama Clarkson Woodward	Y	Cama Clarkson	~~[illegible]~~ Rialodge@gmail.com
	13	49 Montreal St	C	Colleen Jackson-Commoss	N		
	14	52 Montreal St	C	Ryland & Brook Rankin	Y		
	15	54 Montreal St	NC	Montreal St. Realty LLC	N		
✓	16	55 Montreal St	C	Alison Grey & Oiver Murray	Y	see below	
✓	17	60 Montreal St		Patricia Ryan	Y	Patricia Ryan	pryan2@maine.rr.com
✓	18	46 Montreal St		Marguerite Cartonia	Y	marguerite cartonia	
✓	19	55 Montreal St		Alison Grey	Y	Alison Grey	
	20						
	21						
	22						
	23						
	24						

Google Groups

Munjoy Hell

Susan Yandell <sueyandell@gmail.com> Oct 14, 2019 6:44 PM

Posted in group: **Planning and Urban Development**

My beloved Portland is no more.The city government should be ashamed for the dreadful destruction and ruination of 'The beautiful town by the sea ' .
Longfellow would weep, as I do .I walk the very streets that he did .He described with such love the joys of his surroundings ,as I once did.
No more.
You will one day ,perhaps ,feel great SHAME at the horrors and unspeakable
decimation that you brought to this cherished place which to me has lost it's sense of 'place' .
What I now see is the GREED and INDIFFERENCE and INCOMPETENCE you and the DEVELOPERS have wrought.
With such a horrible sense loss and sadness I remain a resident of 51 Monument St.and a VICTIM of your ARROGANCE.
Sue Yandell....beautifier of the neighborhood.

Google Groups

Historic District changes in East End

Adam Frederick <afrederick@gogginenergy.com> Oct 30, 2019 3:56 PM
Posted in group: **Planning Board**

Dear Planning Board and City Council,

Though I strongly endorse the City of Portland doing everything in its power to limit the further construction of hotels and parking garages on the very limited remaining real estate in our decreasingly charming Port City, and though I support placing of many structures within Historic District for the sake of architectural preservation, I must voice sincere concern about what this will do for the energy future of the town.

We are at a critical point in human history. We can continue burning fossil fuels for power and heat and find humanity "clinging to the poles" of our planet for survival within one generation, OR we can do everything in our power now to offset the impact of our energy use. This requires support of technology like Solar and Wind Power, Heat Pumps (geothermal and mini-split), and batteries. Limiting the effective usage and placement of these carbon-offsetting technologies for the sake of aesthetics is, in my mind, short sighted. I say this not as a business owner and capitalist, but as a citizen of this planet, as a father, and as a Portlander.

I support the Historic District and the core of its mission. I have worked with Rob Wiener on a number of projects in the west end, and believe that we are all fundamentally trying to do what is "right" for the City of Portland. Preserving the architecture and aesthetics of this city is so important to the look and feel of Portland. However, I believe that compromises may have to be made when it comes to the very real environmental catastrophe at our door. ALL buildings in this town should be encouraged (if not required) to install solar panels if their orientation and structure allows. Passing of sweeping regulation without adapting to or accommodating for a new energy paradigm will be to the detriment of all.

I encourage the Planning Board and City Council to consider not only the architecture of our past, but the Portlanders of the future while making these zoning changes.

--
Best Regards,

Adam Frederick
VP, Director of Sales and Design
207.408.6616(m)
207.772.7557(o)
Goggin Energy
75 West Commercial
Suite 202
Portland, ME 04101
gogginenergy.com

Google Groups

Support for Munjoy Hill - expansion of proposed Historic District

EJ Koch <ejkoch@gmail.com> Oct 28, 2019 9:28 PM
Posted in group: **Planning and Urban Development**

This is my letter of support for the proposed, and an expanded, Historic District.

Because the materials are lengthy, I have included a cover summary.
Please take these as part of the record concerning the Historic District proposal, and again register my (and hundreds of others') support for a Munjoy Hill Historic District.

Erna Koch
617-818-0882



ERNA KOCH
81 Vesper St., Portland, Maine 04101
Phone: 617-818-0882
E-Mail: *EJKoch@gmail.com*

October 29, 2019

City of Portland Historic Board, Planning Board, and City Council members

This is a cover summary of the materials attached. I hope you will read my letter, but I recognize that time is valuable and limited.

Please Adopt and significantly expand the proposed Munjoy Hill Historic District

- After a great deal of community effort, with no discernable impact, adopting a Historic District on Munjoy Hill appears the best/only way to protect the Hill's character and livability. It seems that the City has allowed developers to control development on the Hill through lobbying and private agreements. This is anathema to an open process.

- **Broad Local and popular sentiment runs overwhelmingly in support of preservation** over demolition, and against predatory development producing massive scale and incompatible new developments. These opinions, directly from Hill residents and others are reflected by hundreds of people on Social Media over a term of years. [SEE: Appendix A, for a broad sampling of actual local comments about inappropriate development on the Hill]

- An "Opposition Petition" to the Historic District presented to the City is representative of just 12 properties, one of which has already been demolished and redeveloped, and one of which was demolished this week for development, pending review of yet another controversial, oversized building plan.

- New building is supposed to comply with Design Standards, which provide in relevant part that the style, scale and massing of new buildings be compatible with the rest of the local streetscape. The Planning Board appears to be paying no

attention to these standards, and approves inappropriate proposed building just about every time. I'm not aware of any time the Board has turned down a plan – they accept "revisions" of inappropriate plans regularly, failing the community every time. Staff appears to be captured by the developers.

- New Planning Board-approved buildings are usually oversized eyesores crammed onto small lots that tower over their neighbors and contribute nothing good to the streetscape or the local community. They do *not* add to Portland's housing stock in any way that is meaningful to residents. A good proportion of the condos are bought by people who don't live in Portland more than 3-4 months a year.

- The minor effort by the City in response to sustained and vigorous resistance of residents has not been effective to preserve the Hill's valuable assets. We need a Historic District to accomplish that. [SEE: pictures pp 6-11 of letter]

For more detail about my strong support for a broad Historic District on Munjoy Hill, see my full letter. Thank you for your consideration.

Erna Koch



ERNA KOCH

81 Vesper St., Portland, Maine 04101
Phone: 617-818-0882
E-Mail: EJKoch@gmail.com

October 20, 2019

City of Portland Historic Board, Planning Board, and City Council members

Hello,

My name is Erna Koch. I am 40 year resident, and a 35 year property owner of a three family house on Munjoy Hill, in an area that falls within the currently proposed Historic District.

This is a long letter which enumerates developments that have informed my conclusion that enacting a Historic District is the only reasonable path to preserve the Munjoy Hill streetscape. I have included extended community commentary in the Appendix, to allow readers to get a sense of what actual local discussion on this issue looks like.

Please Adopt and expand the Munjoy Hill Historic District
I support and encourage expansion of the Munjoy Hill Historic District for all the reasons you've heard from others, and as I've written in the past. As both the zoning ordinance, design standards, and the Comprehensive Plan require, new buildings "should be" compatible in scale, massing and design to the neighborhood. Munjoy Hill has a Historic story – much of it as housing for the many working class families who worked in Portland's industries. This should not be destroyed by developers' building to the "limits of the envelope" as they have heretofore been allowed. This kind of development is not desirable for anyone but developers looking to maximize square feet they can cram in, and thus higher profit. THIS is one important reason why the buildings they erect end up looking like big boxes.

Another reason to support the adoption and expansion of a Historic District for the Hill is the culture our human scaled streetscape has encouraged and sustained for over a hundred years. Although many of the original families from my neighborhood have moved, and their triple

decker buildings have been converted to condos, at least those condos remain part of the neighborhood streetscape. We retain a sense of community, walking neighborhoods, and a strong feeling of connection to each other and to the working families that have lived here so many years.

While the Hill has traditionally been a place where working people have lived and raised families, its character is rapidly being compromised by speculative development of "big box" type condo housing. The housing thus added is far out of the financial reach of most Maine residents. It is opposed by most property owners and residents of Munjoy Hill for this reason, *and* because it is not compatible or consistent with the type, design, and scale of housing here.

The new big box buildings contribute nothing, and in fact stick out like oversized monoliths, many of them not even having front doors to the street. Many of the new residents come from places where this type of building is common, car-centric. So far, we have seen little participation or connection by the new residents to the ethos of the local community here. I am not faulting them personally – they are moving here from other communities that often have the appearance of the new condos they've chosen. It is important to note that architecture and streetscape strongly suggest what kind of community exists, but many of the new buildings point to the normalized isolation many of us feel in bigger cities. It's what many of the new residents are more familiar with. Ironically, our area's character, appearance, and culture is part of what attracts new residents and visitors to Portland. As we allow changes that do not fit, we become "every city" USA.

This kind of development has been supported to date by the planning board, through the use of variances and other techniques, while cynically calling it "adding to housing stock." In the past, Hill residents have supported reasonable regulation standards that would curtail predatory development. But, developer practices endorsed by the Planning Board have already changed the face of the hill, and we have learned that the considerable effort to add clearer standards has had little effect on Planning Board deliberations and actions. If action is not taken now to create a Historic District, incompatible development will continue to overtake this part of the city that we (and the many visitors to Portland) love. And, I want to live in a community I can still recognize.

This is as **Portland's Comprehensive Plan** emphasizes:
* The need to stabilize and enhance historic areas of the to ensure quality investment in existing structures and ***compatible*** **infill development**;
* That we encourage additional ***contextually appropriate housing*** density in and proximate to neighborhood centers…. as a means of supporting complete neighborhoods;
* That we ***promote historic preservation*** as a key economic, sustainability, and community development strategy.

The planning board is failing miserably to hold developers to any actual compatible design/scale/massing standard or code provision [SEE: Appendix B], even after an Ordinance change for which many fought long and hard. We don't have a couple years to "***be in a better place to look at the results and what is happening and [we will] be in a better place to take stock and see how it worked out.***[1]***"*** We don't have more time. Given our experience

[1] Christine Grimaldi, PPH, talking about the Historic District designation, 2019

with a clear ordinance revision including standards which produced no change on the ground, we already know how it's been working out.

Not as intended.

A Historic District will provide CLEAR guideposts to residents and developers. We need it. Nothing else has worked.

There is a Petition that has been circulated in opposition to the Historic District. It is not unreasonable to believe it represents less than 2% of property owners on the Hill.

Looking up the 25 signatures on the "opposition" petition, there are some notable factors.

- The signatures represent owners of 12 properties (with 33/37 Montreal which is currently slated for development and in process, counted as one).
- Three or four of the 12 properties are older, modest single or multifamily dwellings, which could be attractive targets for teardown and "development."
- Two of those properties that could be development "targets" are directly across the street from the proposed development at 33/37 Montreal St.
- One signatory appears to be a renter at one of the 12 properties, and one is a property manager who is not an owner.
- One signatory listed an address that can't be found in the City Assessor's database, and his name is nowhere listed as an owner on that street.

What are the opinions of those who live on the Hill who have not signed any petitions? It is worth considering the opinions of a swath of Munjoy Hill residents. Many of us have made our position clear at City Hall and information meetings. However, there are others who have not signed petitions, and don't approach City Hall. These are people who are working hard, pursuing their lives, who feel cut off from "politics." However, that doesn't mean opinions aren't expressed. When a teardown happens, or when a development is proposed or built, there is usually active commentary on social media and in the community, dating back to well before 2016.

An example: 5 Merrill St. This is now a two family condo building, with 6 bedrooms and 6 bathrooms, which looms over its neighbors and is thought by many to be the ugliest building on the Hill. Many say it "gives the neighborhood a black eye." It's a typical example of "building to the limits of the envelope." (See before and after pictures below).

From the upper floors, it has "sweeping views", which is what they're selling. That and the "charming neighborhood." One wonders, how long will it remain "charming?" An apartment in this building was listed for $1,500,000.

From Face book group: "Munjoy Hill Residents (Past & Present)"



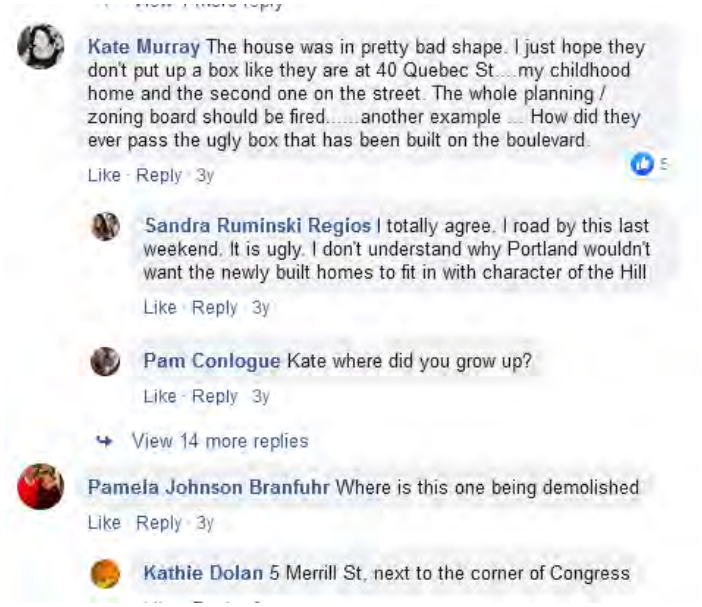

For more of the hundreds of comments this and other Face book posts have generated, See Appendix A.

Note the difference in scale and design between what became "new 5 Merrill" and "old 5 Merrill," *and* the 181 comments on Facebook in 2016.

Words that appear most frequently related to the teardowns and/or new developments are "sad," "ugly," box,"ugly condo," and "eyesore." There are a couple references to Union Station, and at least two comments in that thread asking ***"Doesn't Portland have design ordinances so neighborhoods will retain their character?"*** and ***"I don't understand why Portland wouldn't want the newly built homes to fit in with the character of the Hill."***

As someone who is passionate and involved, I speak about development with other property owners and residents daily. Many of my closest neighbors live in condos – they are from other parts of the country and bought a condo in an updated three unit because they love the

Hill's character, their own restored or updated building, and the area. Sentiment among residents I speak with, long term and newer, runs overwhelmingly towards protection from massive and inconsistent design, as do the Facebook posts.

The point I'm making here is that despite the fact that many Portland residents don't speak up – people are busy with their lives, or intimidated, or don't know who to talk to/don't think "fighting city hall" is productive – if one looks, it is easy to see that a large majority strongly disapprove of the rampant teardowns and oversized overdevelopment on the Hill. Also on this Facebook site, are several references to Union Station. We cannot be allowed to destroy ourselves to please developers.

The above comments were from 2016, when the Merrill St. building was torn down. In that case, the building had gone without maintenance for too long, and was unsafe. Yet, people were still concerned about what would replace it. And they were right to be.

Indeed, can it be understood *"why Portland wouldn't want the newly built homes to fit in with the character of the hill?"*

The negative consequences of the R-6 zoning, meant to allow/promote infill development for more housing became clear quickly.

From a *Portland Press Herald* article in 2019:

"Residents and policymakers are reacting to development patterns that emerged after the City Council made changes to the R-6 zone. Those changes opened up smaller lots for development.

Since then, large boxy condominiums have popped up next to more traditional-style homes and apartments. In some cases they are built to the property lines, reducing the amount of sun and light between buildings and making the streets less welcoming, residents said.
[See, 47 Monument St., p. 7]

"Those Soviet structures are popping up like Japanese knotweed," Morning Street resident John Wuesthoff said."

Moratorium and 9 Moody St: Following many months of advocacy by Hill neighborhood residents and property owners, a 6 month moratorium was enacted on teardowns. Note that the last one on the permit list (next page) is 9 Moody St., in my neighborhood. Jim Brady had a teardown permit, and I believe he demolished the building at 9 Moody St the day before the moratorium went into effect.

I met Brady the night before his teardown, and he told me the 9 Moody St. building was "unsalvageable" and that he intended to construct something very much like the then-existing building for him and his family to live in. It was not in fact unsalvageable, and you can judge for yourselves whether it is similar in style and scale to the building that was demolished.

Munjoy Hill demolitions

Developers have demolished or submitted plans to demolish homes on these properties in the past two years, part of a trend that is replacing rental apartments with new condominiums on Munjoy Hill.

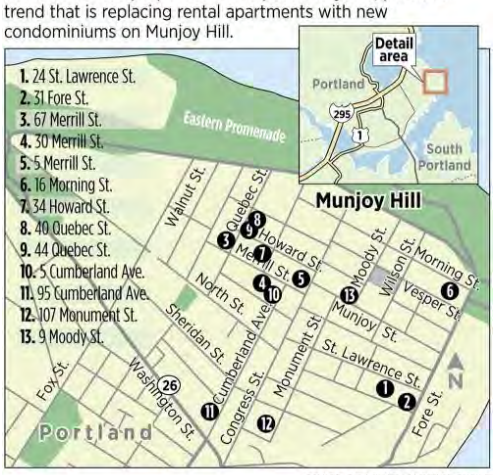

STAFF GRAPHIC | MICHAEL FISHER



PRESSHERALD.COM

Portland council puts freeze on Munjoy Hill demolitions

9 Moody before:



After:





There have been many other demolitions and “redevelopment.” Some buyers have chosen to restore or build in a compatible fashion. However, many have not.

A tiny single family on a small lot was “redeveloped” and now is massive and interferes with houses on both sides of it.

47 Monument before: After




The 47 Monument building was close to neighbors before, but still allowed the neighbor to its left to “breathe” and have access to light.

Then (Small grey house to right) Now




25 Monument Before: Now:




30 Merrill St.
before:



30 Merrill St.

2 Existing Rental Units Replaced with 7 Luxury Condos and Incompatible Scale to Surrounding Buildings



BEFORE



AFTER

Karen Snyder photos

33 Lafayette St.

An Old Church and Mature Street Tree Replaced with Incompatible Architecture To Surrounding Buildings



BEFORE

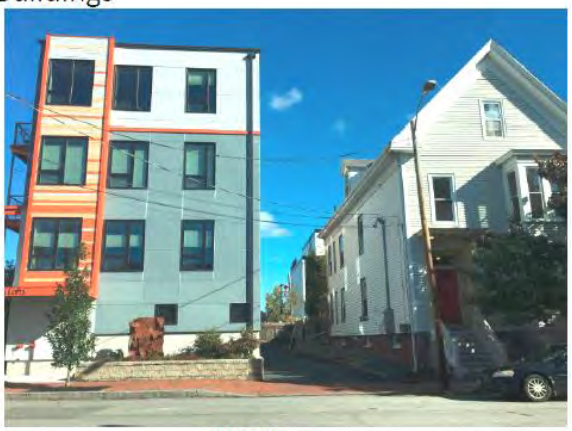

AFTER

Karen Snyder photos

34 Howard St. (Again, as with most of these, built to the "limits of the envelope")

A Traditional Single Family replaced with a Contemporary Single Family



BEFORE- Single Family



AFTER-Single Family

Fore St.

3 Existing Rental Units and Mature Street Tree (on left) Replaced with the Scale and Mass of 4 Luxury Condos with No Front Door



BEFORE



AFTER

And coming up:

Montreal and Morning Street proposed developments:

From Portland Press Herald, September 2019
[Developer] Wells' project is said to be the only proposal that has gone in front of the preservation board since the overlay was enacted, said Christine Grimaldi, acting planning and urban development director. ***With so little engagement in the process, it is hard to say how well it is working or if it should be tweaked, she said.***♦

"I feel confident about it, ***but I feel like in a couple years we will be in a better place to look at the results and what is happening and we will be in a better place to take stock and see how it worked out," she said.***

♦ It is not clear what she's referring to here. There has been a great deal of community "engagement."

I think we can see how it's working out. We don't need *more* years more of this and further destruction of usable/restorable compatible housing for expensive condos with "sweeping views."

The 33/37 Montreal project is a plan to remove a salvageable, compatible two/three family house on a corner in a neighborhood of small single and two family residences, and tear down two other houses, in order to combine 2-3 lots and build a massive out of scale "modern" condo building in their place on the combined lots. As proposed in both the first and second iterations, the builder want to, as most do, build to the "envelope" of permissible area, since scale, massing, and design do not appear to be considered as obstacles by the planning board, even though Portland's Design Standards require it [See Appendix B].



Game plan? It appears the game is to propose something so out of scale and objectionable that provokes community outcry, and cannot be approved. Then, to return with something that is presented by the builders as "significantly revised," even though it does not comply with the code either. By that time, builders are crying that the process is a hardship on them, the community is exhausted, and it often appears the Board is less inclined to reject the "revised" design because of all the "effort" the developer has made to "comply" with the standards.

There is a similar game afoot for infill building in an empty lot at 130 Morning Street. While several of the surrounding buildings are large (they are a redeveloped school and were apartment workforce housing), the proposed design extends again right up to the "envelope" of permissible lot lines. The architects confirmed to me that their instructions were to design

the build to the boundary of the "envelope" to maximize interior square footage. It did not appear that anyone in the design process considered compatibility with existing structures.



133 Morning St



129 Morning St



119 Morning St



130 Morning

Karen Snyder photos

I will end with this sentiment by Karen Snyder: "When the hot market of Munjoy hill is over, real estate agents and developers will survive and will move on to the next market leaving behind junk 'new' ugly buildings where once stood a neighborhood of historic charm. This IS the reality of what is happening and why I hope Munjoy hill is considered as a historic district."

A Historic District will provide CLEAR guideposts to residents and developers. We need it. Nothing else has worked.

I agree with Karen - we have tried everything to bring attention to the conflict of the design, size and character of these new developments with the existing streetscape and neighborhood. My fear is that if this progresses further, those proposing new oversized and incompatible developments will begin to point to other "box structures" nearby to leverage their requests to build more of the same.

As has been done in the West end, a Historic District on the East End will bring us to a place where reasonable renovation and building can continue to be implemented, and not inflict damage on the area.

Thank you for your consideration.

/S/

Erna Koch

APPENDIX A:
Public Comment from Social Media
[this is a sample only]

Many Hill residents and property owners have made our position supporting an (expanded) Historic District clear. However, there are many who have not signed petitions, and are unable, or don't know how to approach City Hall as advocates.

When a development is proposed or built, there is usually active commentary on social media, dating back to at least 2016. A posting about 5 Merrill Street in 2016 generated 181 comments.



(See Appendix pages 2-6, for sampling of comments on this post, 2016-present)

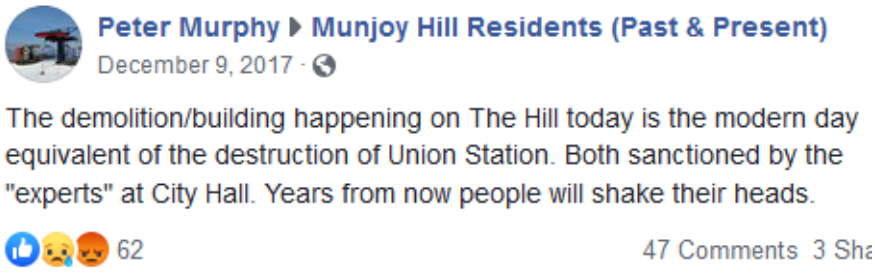

Comments concerning the 5 Merrill Street teardown (Facebook, 2016; "Munjoy Hill Residents (Past & Present)":



Kate Murray The house was in pretty bad shape. I just hope they don't put up a box like they are at 40 Quebec St....my childhood home and the second one on the street. The whole planning / zoning board should be fired.....another example .... How did they ever pass the ugly box that has been built on the boulevard.

Like · Reply · 3y

Sandra Ruminski Regios I totally agree. I road by this last weekend. It is ugly. I don't understand why Portland wouldn't want the newly built homes to fit in with character of the Hill

Like · Reply · 3y

Pam Conlogue Kate where did you grow up?

Like · Reply · 3y

View 14 more replies

Pamela Johnson Branfuhr Where is this one being demolished

Like · Reply · 3y

Kathie Dolan 5 Merrill St, next to the corner of Congress

Nini Mc Manamy Not only that one, the tenants in the building at the corner of North and Congress, formerly Fuller Glass and before that a beauty shop, were given 30 days to get out.

Like · Reply · 3y

Monique J Gagnier Fuller Glass has been gone quite some time now. It's a shame the tenants have to move out.

Like · Reply · 3y

Lydia Savage 4 stories of condos going up with parking on first level and decks for views. let's just hope it is not a boxy building of awful colors (terra cotta orange seems to be the rage)

Like · Reply · 3y

Kathie Dolan Bleeeccchhh!

Like · Reply · 3y

Erica Scothorne I was back there last weekend after being gone for about 15 years, it's changed so much

Michele Latham Saw this the other day and was very surprised. I knew they were renovating but tearing down? What's going in there? another ugly looking 4 story condo no doubt.

Like · Reply · 3y · 3

Betty Calderwood-Martin Had to come down. It wasn't healthy and was too far gone for renovation. It's SUPPOSED to fit the neighborhood. I heard it will be a two unit condo.

Like · Reply · 3y

Kathie Dolan Condos suck, especially when they look like the ones where Nite Owl was!

Like · Reply · 3y · 1

Carol Lambert Sad

Like · Reply · 3y · 1

Ashley Webster I drive by yesterday, it looked like it was touching the other house behind it. I couldnt bring myself to take a picture though

Like · Reply · 3y

Betty Calderwood-Martin It was only about 3 inches from the house in back on one side.

Like · Reply · 3y

Ashley Webster You can see the shape of your old. House I the back of the other one.

Like · Reply · 2y

Chris Coose There is more retrofitting going on on the Hill than there is tear down. The replacement buildings just plain suck in relationship to the surrounding neighborhood.

Like · Reply · 1y · 1

Enoch Bradford Wenstrom do yu people live around the corner from this building like I do? it is a really classic nice looking place. it is a shame it is being destroyed vs rennovated

Like · Reply · 1y · 1

Heather Ashby Actually quite the contrary. I own lots of property in Portland and have never overhauled one. Always brought it up to its prior glory. Never have we torn one down. We also own a very iconic and historic building downtown that we are restoring and we a... See More

Like · Reply · 1y

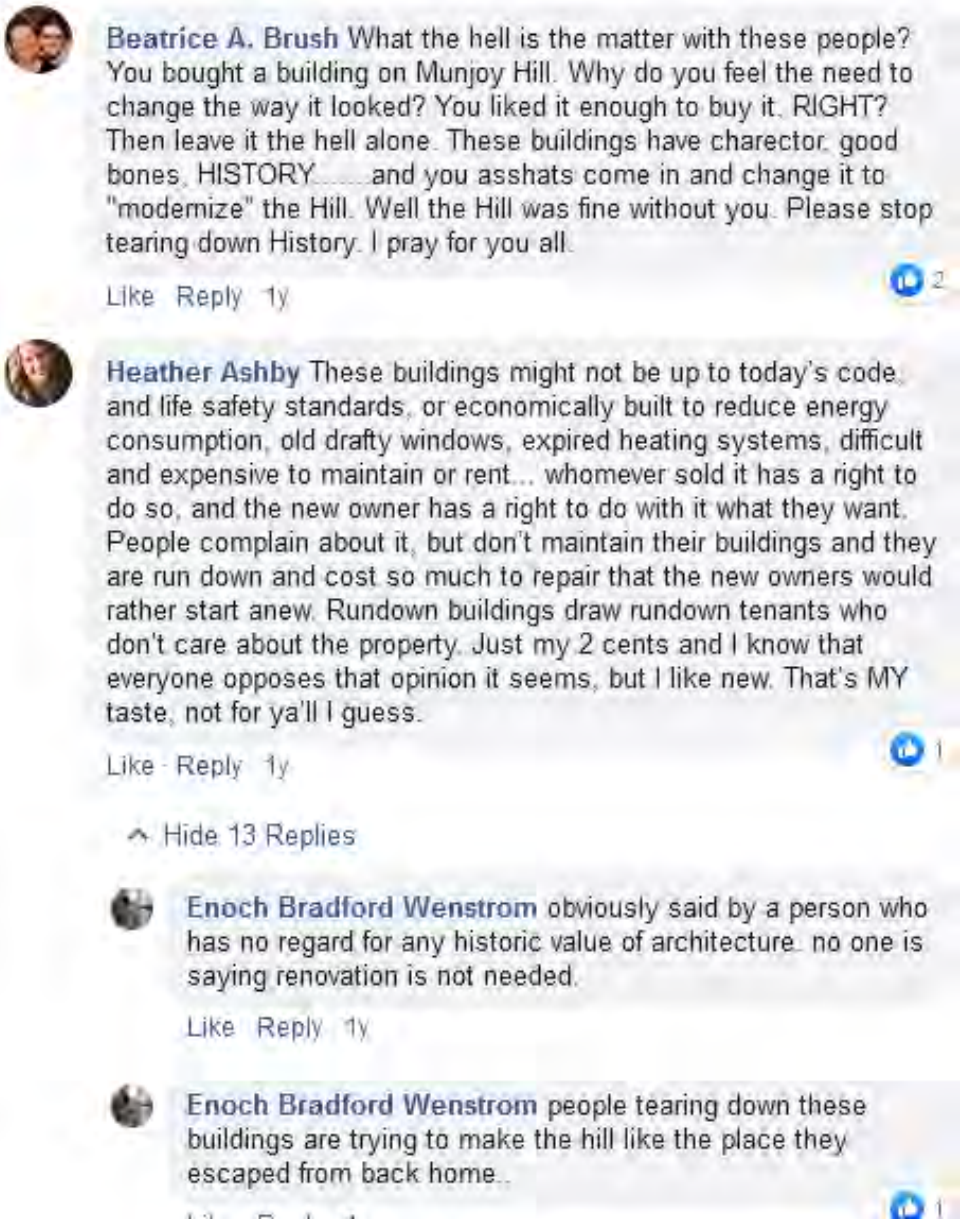

Beatrice A. Brush What the hell is the matter with these people? You bought a building on Munjoy Hill. Why do you feel the need to change the way it looked? You liked it enough to buy it. RIGHT? Then leave it the hell alone. These buildings have charector, good bones, HISTORY.....and you asshats come in and change it to "modernize" the Hill. Well the Hill was fine without you. Please stop tearing down History. I pray for you all.

Like Reply 1y 2

Heather Ashby These buildings might not be up to today's code, and life safety standards, or economically built to reduce energy consumption, old drafty windows, expired heating systems, difficult and expensive to maintain or rent... whomever sold it has a right to do so, and the new owner has a right to do with it what they want. People complain about it, but don't maintain their buildings and they are run down and cost so much to repair that the new owners would rather start anew. Rundown buildings draw rundown tenants who don't care about the property. Just my 2 cents and I know that everyone opposes that opinion it seems, but I like new. That's MY taste, not for ya'll I guess.

Like · Reply 1y 1

Hide 13 Replies

Enoch Bradford Wenstrom obviously said by a person who has no regard for any historic value of architecture. no one is saying renovation is not needed.

Like Reply 1y

Enoch Bradford Wenstrom people tearing down these buildings are trying to make the hill like the place they escaped from back home..



Chris Coose Coming very soon, the demolition of 25 Monument for another box of condos. It was once a school and it is structurally sound. The long time African American owners got over a million dollars for it. Charlie's house across the street from 25 Monument go... See More

Like · Reply · 1y · Edited

2



Mary Brennan I agree. I was so sorry to see Union Station destroyed for a discount store that failed miserably. I think it was Arlans, are something like that. Complete junk!

Like · Reply · 1y



Cynthia Ann Wildes Smith I agree, and the distruction of LongFellow house on Fore Street that he was born in leading to the Prom . That was torn down as well. So we could house all that ugly business 's that took its place. Yes we had residents down there as well.

Like · Reply · 1y

1



John Bennett I'm already shaking my head I disbelief couldn't wait til years from now.

Like · Reply · 1y



Eddie Fowler Brutal architecture describes it to a T...

Like · Reply · 1y

1



Peggy Harrington Wilson It's a disgrace! Tearing down all those homes of people and families that have lived there with memories that are now gone. So sad😔

Like · Reply · 1y



Timothy M. Smith As a life long resident of the hill still living here today.im disappointed in the councilor that represents munjoy hill,why did you wait so long to want a temporary ban on teardown and build.you are the reason we need more true residents to hold your office.



Anne Mazur Pappalardo Portland's disappearing history is heartbreaking. My 18 and 25-year-old sons are even lamenting what is going on. Incredible lack of value and historic pride.

Like · Reply · 1y



Solange Kellermann We're shaking our heads now.

Like · Reply · 1y



Kate Tylor It's really sucked to hear the mayor on TV talking about high income places in the city like Munjoy Hill. My heart sank.

Like · Reply · 1y



Kathie Dolan I don't think I care much for that mayor or his politics!

Like · Reply · 1y



Bob Taylor anywhere they can find a dollar.....

Like · Reply · 1y



Carol Connolly So true! So sad!

Like · Reply · 1y



Timothy Trott It's not like it used to be like we grew up the yuppie are taking over not the working class people were used to

Like · Reply · 1y

Nini Mc Manamy ▸ **Munjoy Hill Residents (Past & Present)** •••
October 6, 2016 ·

30 Merrill St scheduled for demolition to make way for condos. This historic house was built in 1840.



65 59 Comments

Rebecca Milliken Sad.
Like · Reply · 3y

Robin M. Plante I hate what the hill has become.
Like · Reply · 3y

Theresa McGeehan WHAT THE HELL IS GOING ON
Like · Reply · 3y

Doreen Lund Burnett Is that little house that sat back from the street with the fence around it still there?It was just past 17 Merrill Street.
Like · Reply · 3y

Donna Stults so sad
Like · Reply · 3y

Mary Anderson Emmons Why don't they just demolish the whole friggin hill! They are ripping it apart piece by piece anyway! This is so sad what they are doing
3
Like · Reply · 3y

Joanne Devine Why doesn't landmarks protect this place?
3
Like · Reply · 3y

WM Jel Where is the historical society, Landmarks and City officials? The Hills preservation should be a priortiy. City Halls basking in tourism money that won't continue ft the old charm of the community goes to condo after condo giving away green spaces to ... See More
10
Like · Reply · 3y

Sandra Ruminski Regios I agree with this post. The city obviously doesn't care about preservation and protection. Just the almighty$$$

Like · Reply · 3y · 2

Sharon Ruminski-Ankiewicz That is so sad.... I loved the old hill...

Like · Reply · 3y

View 1 more reply

Marilyn Blinkhorn This is really awful.

Like · Reply · 3y

Thomas Walker They are all shit now ..no one cared to keep them up

Like · Reply · 3y

Thomas Walker Its sad that munjoy hill wont be trashy any more

Like · Reply · 3y

Mary Anderson Emmons Trashy wtf have you been up there. The only thing people are mad about is tearing down old houses and putting up ugly condos

Like · Reply · 3y

Erica Smith Thomas you obviously only hung out with those types of people.. Munjoy Hill is beautiful!

Like · Reply · 3y · 3

Lucille Reed So sad, sorry !

View 1 more reply

Joyce Slater Sad !

Like · Reply · 3y

Nancy Ciampi Wyman This is so very sad! Munjoy Hill will always be Munjoy Hill but it looks like Condo Hill. Makes me so sad.

Like · Reply · 3y · 2

Carol Lambert Sorry this is happening

Like · Reply · 3y

Sue Jahns awful

Like · Reply · 3y

Peter Adams Today is last day for written comment to the Planning Board: hcd@portlandmaine.gov The hearing is next Wednesday the 12th at 8 pm at city hall. Will post the developer's proposed design shortly.

Like · Reply · 3y · 2

Irene Kathleen Morgan so sad

Like · Reply · 3y


Jack Milton http://www.pressherald.com/.../portland-planning-board.../
PRESSHERALD.COM
Portland Planning Board approves new 7-unit condo development on Munjoy...
Like · Reply · 2y
Lori Baxter-Gaunder 750 sq feet? That's like living in a walk in closet!
Like · Reply · 2y
Chuck Vessey I wonder where they will park
Like · Reply · 2y


Monique J Gagnier ▸ Munjoy Hill Residents (Past & Present)
February 27, 2016 ·
The remnants of 40 Quebec St. Demolished yesterday.
CAT
34
103 Comments

Matt Nickerson Crazy

Like · Reply · 3y

Michele Collins Lane by any chance any before pictures ?

Like · Reply · 3y

Pam Conlogue It was my sisters house she sold and they told her they would not demloish.

Like · Reply · 3y · Edited

1

Pam Conlogue Monique I have many before pictures, even as early as last month inside and out.

Like · Reply · 3y · Edited

1

View 3 more replies

Michele Collins Lane why did it come down ?

Like · Reply · 3y

Hide 12 Replies

Monique J Gagnier The owners are going to rebuild. Sadly I don't have a before photo but someone on here will probably.

Like · Reply · 3y

1

Michele Collins Lane was it the white house on the corner ?

Like · Reply · 3y

Monique J Gagnier Nope. Here it was this past October. It's the one hidden behind the tree



4

Like · Reply · 3y

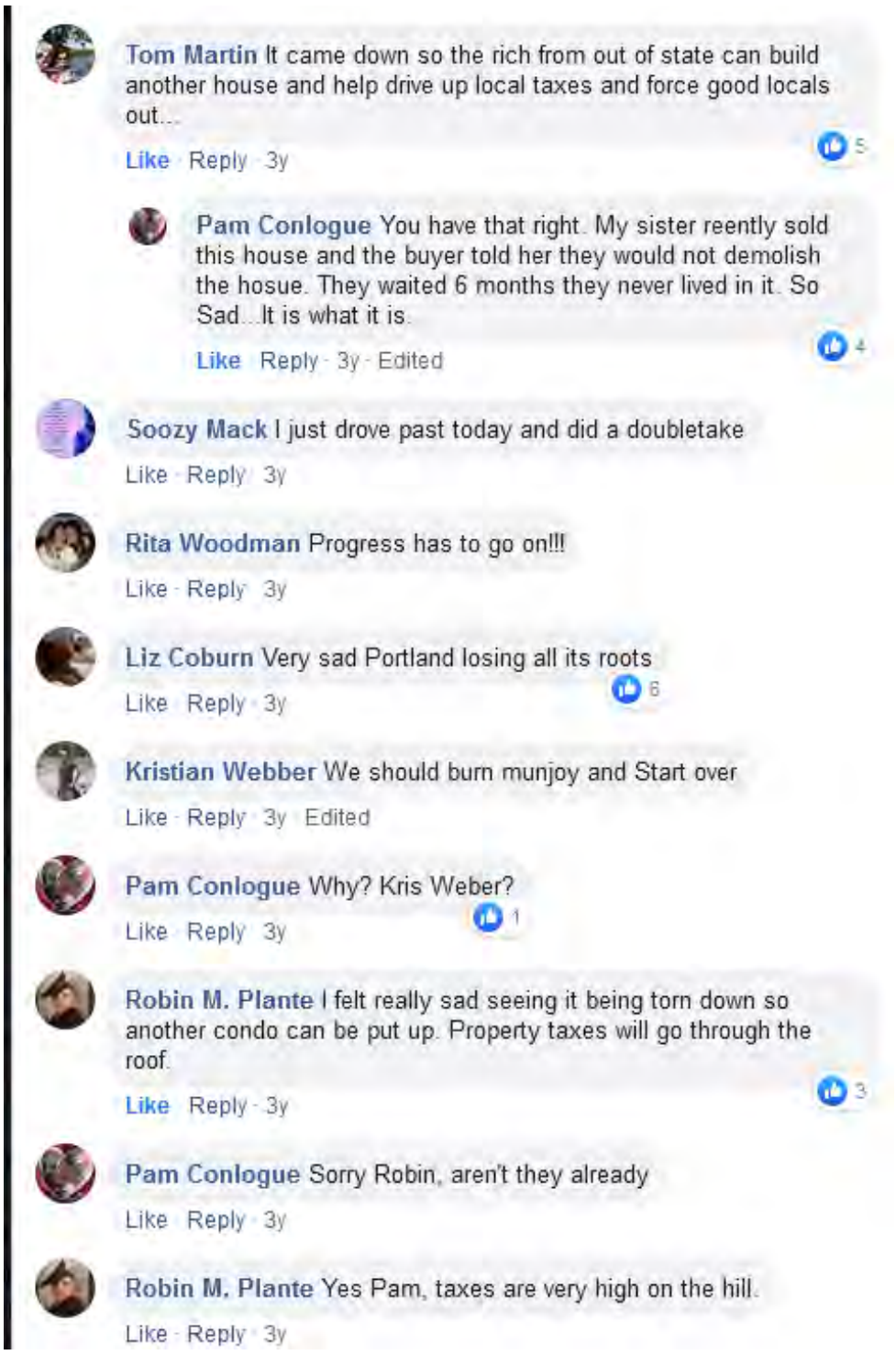

Tom Martin It came down so the rich from out of state can build another house and help drive up local taxes and force good locals out...

Like · Reply · 3y · 5

Pam Conlogue You have that right. My sister reently sold this house and the buyer told her they would not demolish the hosue. They waited 6 months they never lived in it. So Sad...It is what it is.

Like · Reply · 3y · Edited · 4

Soozy Mack I just drove past today and did a doubletake

Like · Reply · 3y

Rita Woodman Progress has to go on!!!

Like · Reply · 3y

Liz Coburn Very sad Portland losing all its roots

Like · Reply · 3y · 6

Kristian Webber We should burn munjoy and Start over

Like · Reply · 3y · Edited

Pam Conlogue Why? Kris Weber?

Like · Reply · 3y · 1

Robin M. Plante I felt really sad seeing it being torn down so another condo can be put up. Property taxes will go through the roof.

Like · Reply · 3y · 3

Pam Conlogue Sorry Robin, aren't they already

Like · Reply · 3y

Robin M. Plante Yes Pam, taxes are very high on the hill.

Like · Reply · 3y

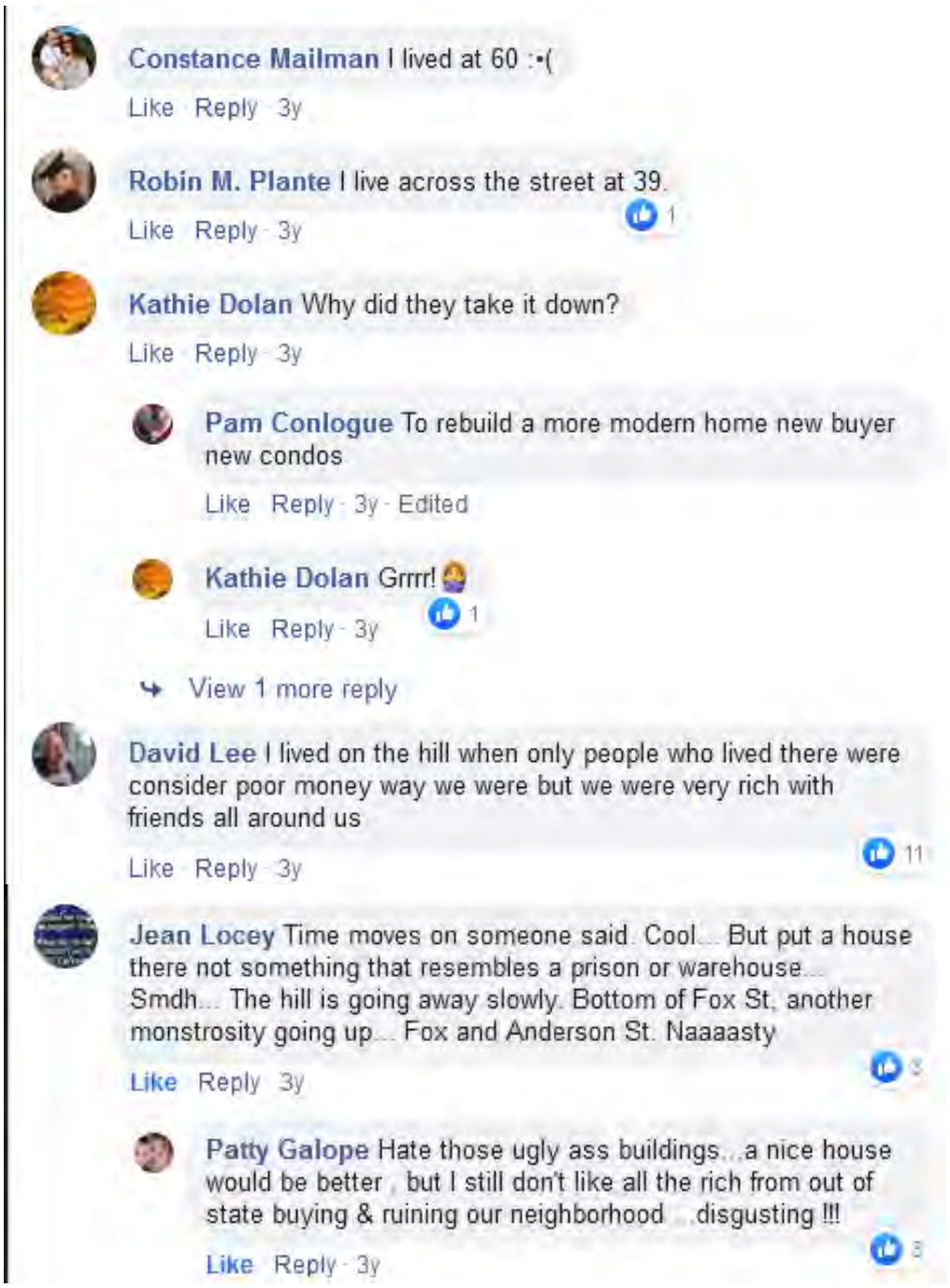
Constance Mailman I lived at 60 :•(
Like · Reply · 3y
Robin M. Plante I live across the street at 39.
1
Like · Reply · 3y
Kathie Dolan Why did they take it down?
Like · Reply · 3y
Pam Conlogue To rebuild a more modern home new buyer new condos
Like · Reply · 3y · Edited
Kathie Dolan Grrrr!
1
Like · Reply · 3y
View 1 more reply
David Lee I lived on the hill when only people who lived there were consider poor money way we were but we were very rich with friends all around us
11
Like · Reply · 3y
Jean Locey Time moves on someone said. Cool... But put a house there not something that resembles a prison or warehouse... Smdh... The hill is going away slowly. Bottom of Fox St, another monstrosity going up... Fox and Anderson St. Naaaasty
Like · Reply · 3y
Patty Galope Hate those ugly ass buildings...a nice house would be better , but I still don't like all the rich from out of state buying & ruining our neighborhood ..disgusting !!!
Like · Reply · 3y



December 2017:



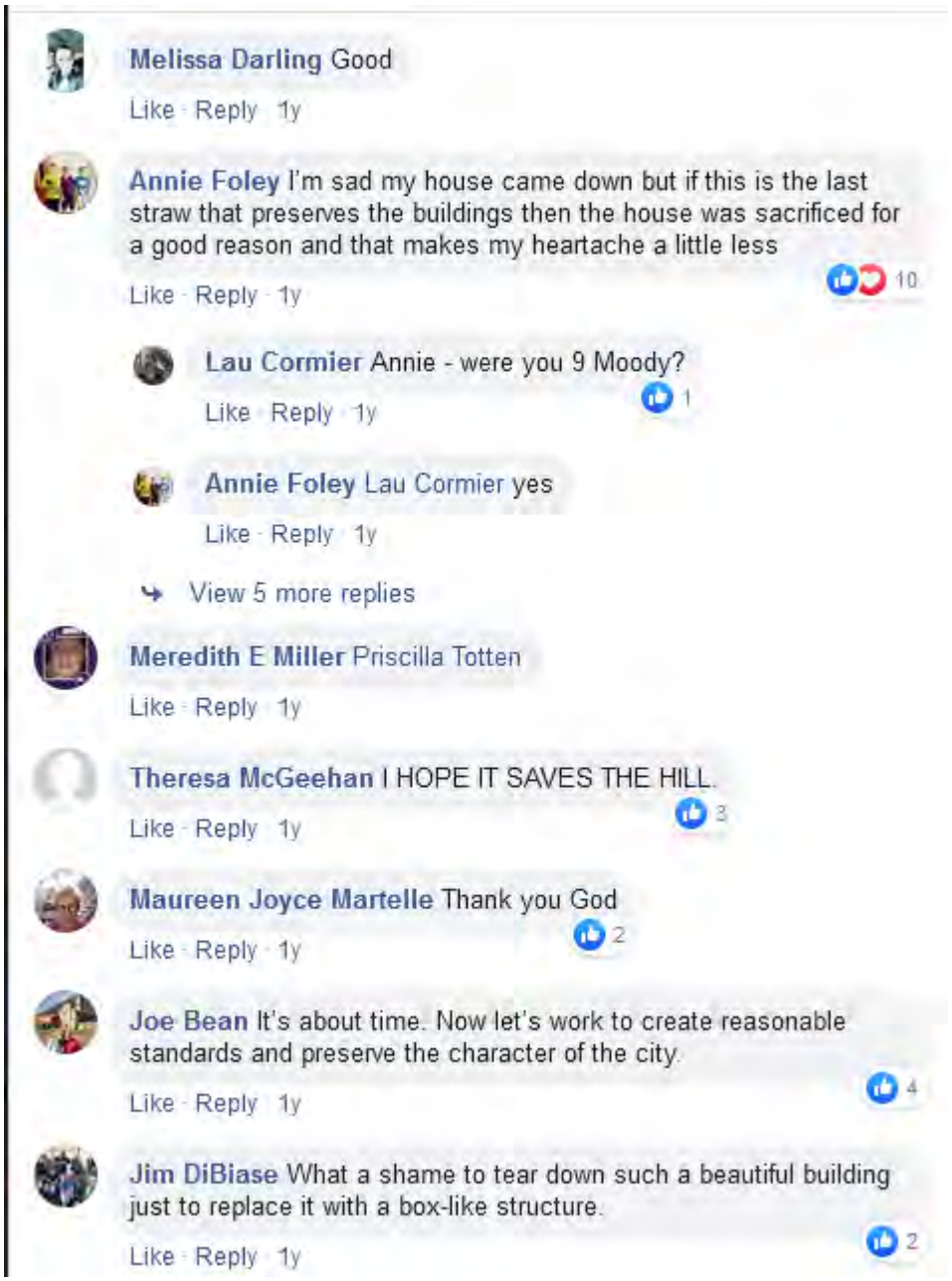
Melissa Darling Good
Like · Reply · 1y
Annie Foley I'm sad my house came down but if this is the last straw that preserves the buildings then the house was sacrificed for a good reason and that makes my heartache a little less
Like · Reply · 1y
10
Lau Cormier Annie - were you 9 Moody?
1
Like · Reply · 1y
Annie Foley Lau Cormier yes
Like · Reply · 1y
View 5 more replies
Meredith E Miller Priscilla Totten
Like · Reply · 1y
Theresa McGeehan I HOPE IT SAVES THE HILL.
3
Like · Reply · 1y
Maureen Joyce Martelle Thank you God
2
Like · Reply · 1y
Joe Bean It's about time. Now let's work to create reasonable standards and preserve the character of the city.
4
Like · Reply · 1y
Jim DiBiase What a shame to tear down such a beautiful building just to replace it with a box-like structure.
2
Like · Reply · 1y

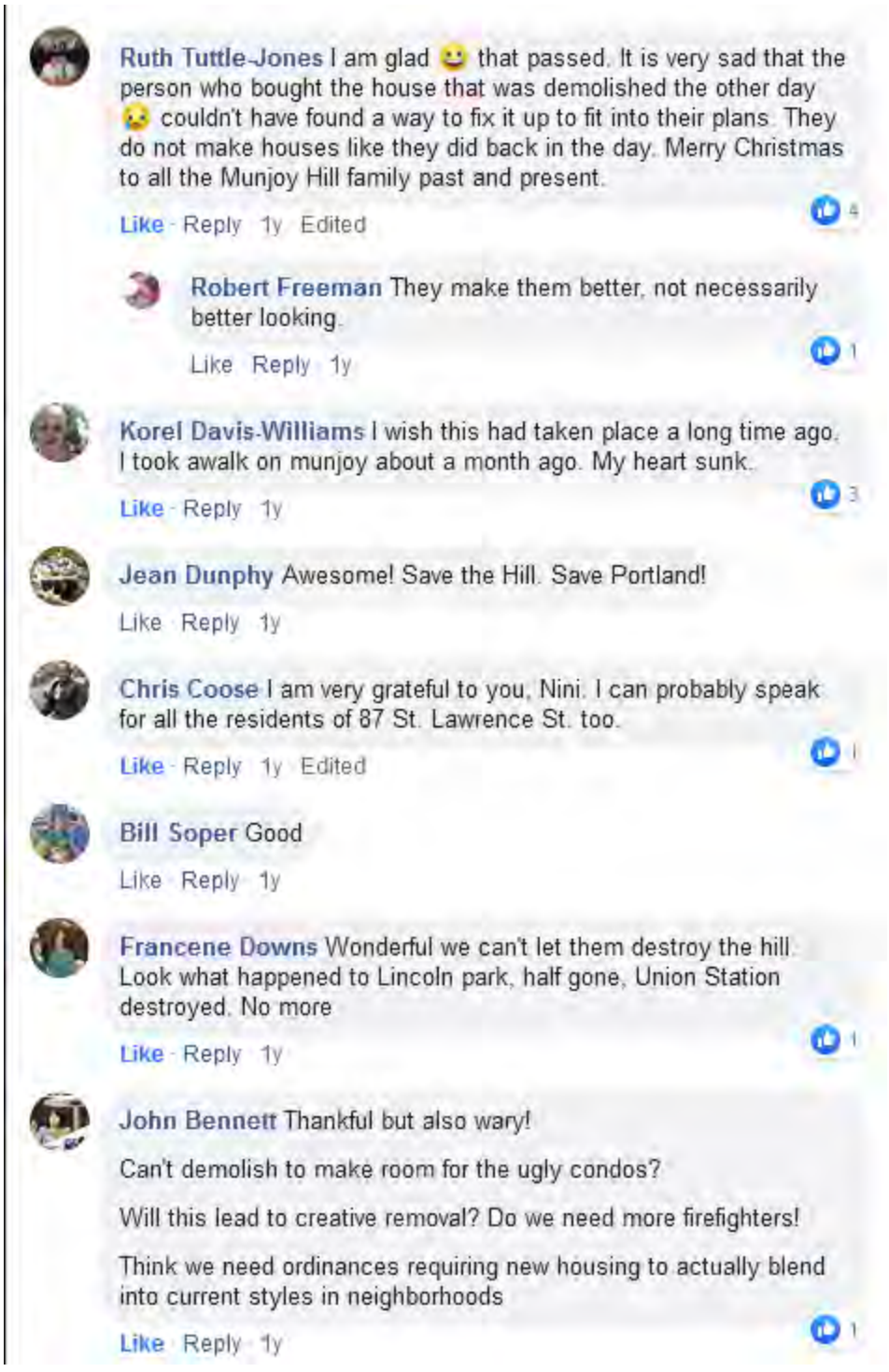

Ruth Tuttle-Jones I am glad 😀 that passed. It is very sad that the person who bought the house that was demolished the other day 😢 couldn't have found a way to fix it up to fit into their plans. They do not make houses like they did back in the day. Merry Christmas to all the Munjoy Hill family past and present.

Like · Reply · 1y · Edited · 4

Robert Freeman They make them better, not necessarily better looking.

Like · Reply · 1y · 1

Korel Davis-Williams I wish this had taken place a long time ago. I took awalk on munjoy about a month ago. My heart sunk.

Like · Reply · 1y · 3

Jean Dunphy Awesome! Save the Hill. Save Portland!

Like · Reply · 1y

Chris Coose I am very grateful to you, Nini. I can probably speak for all the residents of 87 St. Lawrence St. too.

Like · Reply · 1y · Edited · 1

Bill Soper Good

Like · Reply · 1y

Francene Downs Wonderful we can't let them destroy the hill. Look what happened to Lincoln park, half gone, Union Station destroyed. No more

Like · Reply · 1y · 1

John Bennett Thankful but also wary!

Can't demolish to make room for the ugly condos?

Will this lead to creative removal? Do we need more firefighters!

Think we need ordinances requiring new housing to actually blend into current styles in neighborhoods

Like · Reply · 1y · 1



Monique J Gagnier There has to be some middle to agree on. I've seen some really nice restores up on the hill and then some really ugly things, like on upper Sheridan street.... it all looks the same.

Like · Reply · 1y · Edited



Kathleen Carr Bailey I remember many years ago when the protect on North & Walnut St,was proposed the neighborhood seemed to have a lot more say. Though the project was built, and we didn't get all the green space we wanted, they still respected our voice.

Like · Reply · 1y



Rebekah Kirsanova I'm just curious, now that you've stopped new buildings from going up, who's footing the bill to fix the ones currently falling down?

Like · Reply · 1y



Mary Casale Clearly you don't understand what the moratorium is . It does not stop new buildings . Please educate yourself before you speak .

Like · Reply · 1y



John Bennett City has code enforcement regs that need to be enforced. Property owners need to be responsible

Like · Reply · 1y



Rebekah Kirsanova That's provided those owners both have and want to spend the money needed to actually make the home livable. I'm actually currently living in a home that I know as a carpenter by trade, is cheaper to demolish than fix. I agree 100% no more condos in Portland. Period. There are more than enough. I'm not a fan of the up in a month, cookie-cutter, "low income" housing establishments either. I've also seen the inside of a great many homes on the hill. It's sad to see old homes go. Old landmarks that are precious to us. But if moratoriums are going to be handed out, a better long term plan needs to be in place. Something a lot better than the landlord should fix it up. If they came down hard on



Heather Ashby What is "ugly" is a matter of opinion. I think run down, peeling paint, cracking wood, splintered steps, unkept, homes of any sort are ugly

Like · Reply · 1y

1



Mary Casale Clearly you don't know what the moratorium is about . It is a pause . The R-6 zoning that was enacted in 2015 had no restrictions on tear downs . Realistically someone could buy a block of homes and tear them down. They didn't need to be in disrepair , or neglected. . The current tear downs in my block are 2 buildings that were meticulously maintained by the owners (for the last 40 yrs that I am aware of)

Like · Reply · 1y

1



Heather Ashby Thanks for insulting my intelligence. I do know what it is, and what it means. Who you should be explaining it to is all the people breathing a sigh of relief thinking that the Hill is now saved from demolition. The fact of the matter is not that the home was meticulously maintained, but that the new owner has the right to do with it what they wish...because they own it...not the city...not the neighbor...

Like · Reply · 1y



Mary Casale Heather Ashby Well again Heather, that's not quite correct . We have zoning ordinances and design standards for a reason . Cities have Conservation Districts and overlay zoning for the protection of neighborhoods to maintain a scale , mass , and streetscape that reflects the existing properties . Hopefully this is where we are heading .

Like · Reply · 1y

2



Enoch Bradford Wenstrom Property owners in portland have never had the right to do anything they want to. Not sure what neighboorhood you own property in. There are always restrictions. There is nothing wrong with munjoy hill residents wanting to put restrictions in place that maybe focus more on rennovation vs teardowns. You cant tear everything down in the west end just because you own it.

Like · Reply · 1y

2

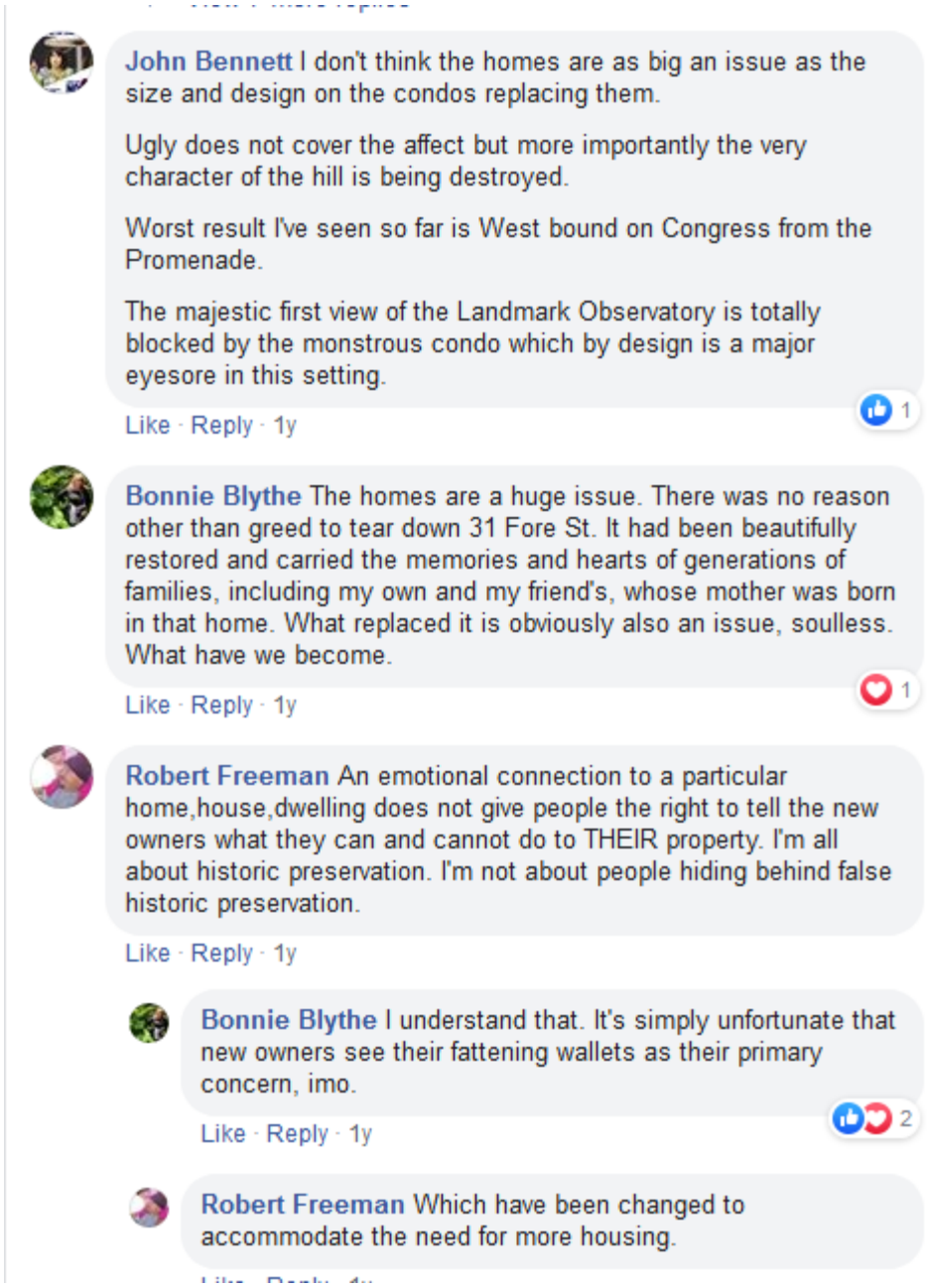

Words that appear most frequently related to the teardowns and/or new developments are "sad," "ugly," box,"ugly condo," and "eyesore." There are a couple references to Union Station, and at least two comments asking "Doesn't Portland have design ordinances so neighborhoods will retain their character?" and "I don't understand why Portland wouldn't want the newly built homes to fit in with the character of the Hill."

Sentiment among those I speak with runs about 97% towards protection of the neighborhood from out of scale and inconsistent design, as do the Facebook posts.

And, finally,




Frank Fowler once again money takes prioity so sad
Like · Reply · 1w
3
Bonnie Blythe So much BS. The current council needs to take responsibility. Why/how do they keep getting voted in??
Like · Reply · 1w
2
Brent Owen New residential construction per se isn't the issue. Older buildings often reach the end of their useful life. The issue is these proposals are ugly and out of place. Doesn't Portland have any design ordinances so that neighborhoods will retain their character?
Like · Reply · 1w
2
Rosemarie Cartonio Dynda This is very disappointing grew up on Montreal Street and lucky enough my elderly mom is still there unfortunately she lives across from where this project is being proposed, this will destroy the neighborhood and over crowd yet another street on munjoy hill and a lot of bs on making more affordable housing in the city that will never happen on the hill again
Like · Reply · 1w
2
Ellen Kanner Sure, demo, as long as affordable housing is part of the plan for this building! And make it fit the character of Portland - where are the ordinances for this?
Like · Reply · 1w
4
Karen Snyder The ordinance have specific loopholes for developers to get out of putting affordable housing. Thank these specific city councilors for this.. Duson, Thibodeau, Mavodones, Ray, Costa, Cook
Like · Reply · 1w
Timothy M. Smith Stop the demo,no more distraction of houses that can be used as affordable housing for young people looking to buy a house
Like · Reply · 1w
Timothy M. Smith Distruction
Like · Reply · 1w
Connie Green Give it to em Smitty! That's all BS And I don't live there. But I've had plenty of family that has. Those were childhood memories, and great ones they were.
Like · Reply · 1w
Shirley DiBiase They spoiled Portland when they got rid of Union Station and made the Mall /which took away all the business from down town Congress St.
Like · Reply · 1w
Shirley DiBiase So now they plan to spoil the Prom,Sad
Like · Reply · 1w

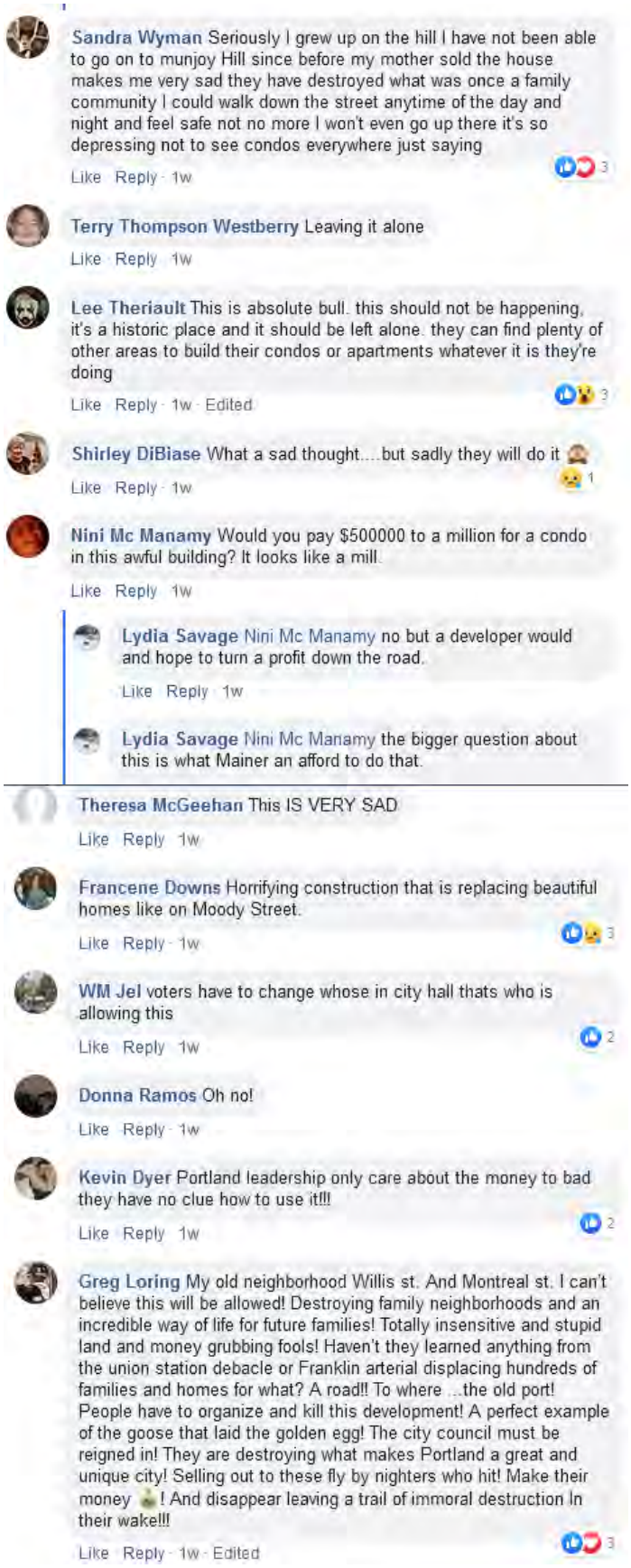
Sandra Wyman Seriously I grew up on the hill I have not been able to go on to munjoy Hill since before my mother sold the house makes me very sad they have destroyed what was once a family community I could walk down the street anytime of the day and night and feel safe not no more I won't even go up there it's so depressing not to see condos everywhere just saying
Like · Reply · 1w
Terry Thompson Westberry Leaving it alone
Like · Reply · 1w
Lee Theriault This is absolute bull. this should not be happening, it's a historic place and it should be left alone. they can find plenty of other areas to build their condos or apartments whatever it is they're doing
Like · Reply · 1w · Edited
Shirley DiBiase What a sad thought....but sadly they will do it
Like · Reply · 1w
Nini Mc Manamy Would you pay $500000 to a million for a condo in this awful building? It looks like a mill.
Like · Reply · 1w
Lydia Savage Nini Mc Manamy no but a developer would and hope to turn a profit down the road.
Like · Reply · 1w
Lydia Savage Nini Mc Manamy the bigger question about this is what Mainer an afford to do that.
Theresa McGeehan This IS VERY SAD
Like · Reply · 1w
Francene Downs Horrifying construction that is replacing beautiful homes like on Moody Street.
Like · Reply · 1w
WM Jel voters have to change whose in city hall thats who is allowing this
Like · Reply · 1w
Donna Ramos Oh no!
Like · Reply · 1w
Kevin Dyer Portland leadership only care about the money to bad they have no clue how to use it!!!
Like · Reply · 1w
Greg Loring My old neighborhood Willis st. And Montreal st. I can't believe this will be allowed! Destroying family neighborhoods and an incredible way of life for future families! Totally insensitive and stupid land and money grubbing fools! Haven't they learned anything from the union station debacle or Franklin arterial displacing hundreds of families and homes for what? A road!! To where ...the old port! People have to organize and kill this development! A perfect example of the goose that laid the golden egg! The city council must be reigned in! They are destroying what makes Portland a great and unique city! Selling out to these fly by nighters who hit! Make their money !! And disappear leaving a trail of immoral destruction In their wake!!!
Like · Reply · 1w · Edited

Comments below range from when this was posted (August, 2019) through 25 hours ago.

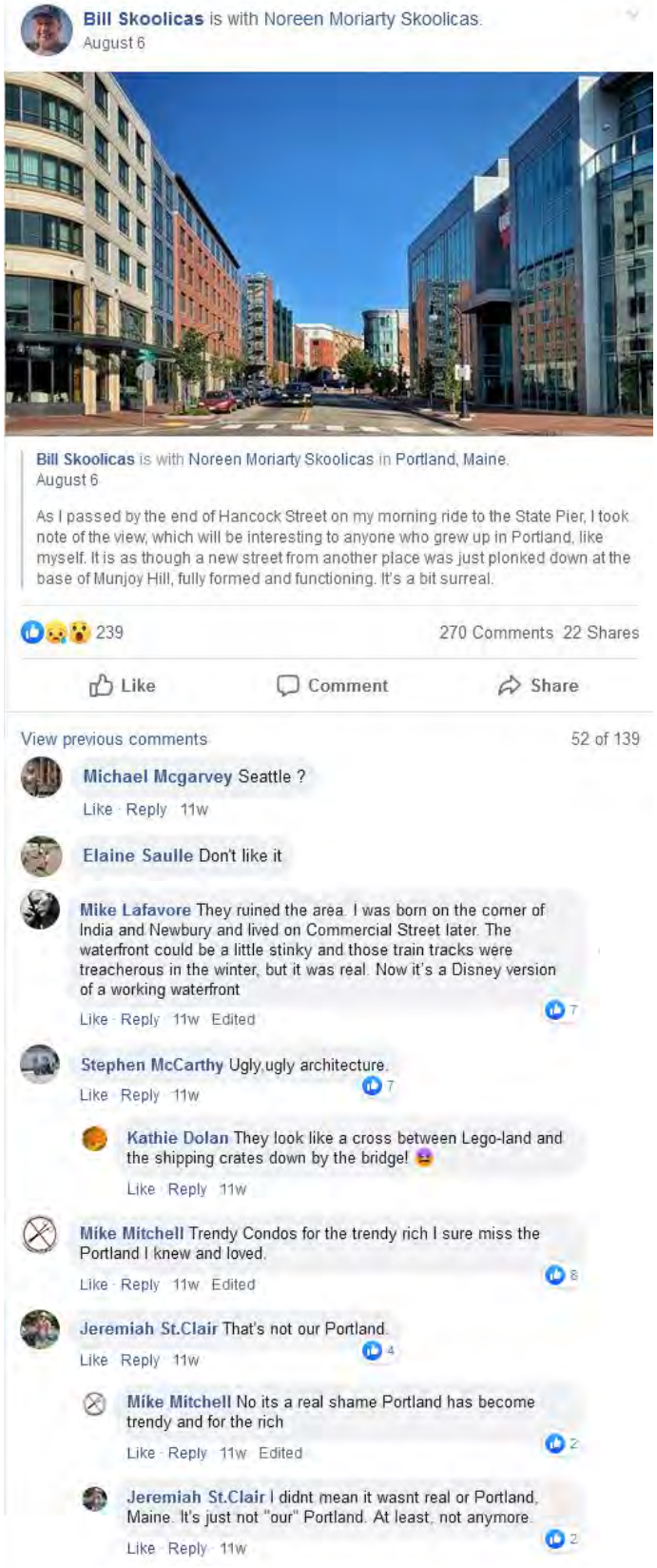

Bill Skoolicas is with Noreen Moriarty Skoolicas.
August 6

Bill Skoolicas is with Noreen Moriarty Skoolicas in Portland, Maine.
August 6

As I passed by the end of Hancock Street on my morning ride to the State Pier, I took note of the view, which will be interesting to anyone who grew up in Portland, like myself. It is as though a new street from another place was just plonked down at the base of Munjoy Hill, fully formed and functioning. It's a bit surreal.

239 270 Comments 22 Shares

Like Comment Share

View previous comments 52 of 139

Michael Mcgarvey Seattle ?
Like · Reply 11w

Elaine Saulle Don't like it

Mike Lafavore They ruined the area. I was born on the corner of India and Newbury and lived on Commercial Street later. The waterfront could be a little stinky and those train tracks were treacherous in the winter, but it was real. Now it's a Disney version of a working waterfront
Like · Reply 11w Edited 7

Stephen McCarthy Ugly,ugly architecture.
Like · Reply 11w 7

Kathie Dolan They look like a cross between Lego-land and the shipping crates down by the bridge!
Like · Reply 11w

Mike Mitchell Trendy Condos for the trendy rich I sure miss the Portland I knew and loved.
Like · Reply 11w Edited 8

Jeremiah St.Clair That's not our Portland.
Like · Reply 11w 4

Mike Mitchell No its a real shame Portland has become trendy and for the rich
Like · Reply 11w Edited 2

Jeremiah St.Clair I didnt mean it wasnt real or Portland, Maine. It's just not "our" Portland. At least, not anymore.
Like · Reply 11w 2



Terri Pierce-Moriarty Disgusting

Like · Reply · 11w

Anthony Taylor Generic facades. While this sort of thing is busting out up and down the coast, New England's hour from the coast decaying industrial burgs are losing their architecturally significant old buildings and filling up with low lifes and vacant lots. The water view-front is turning out like the Bronx or the Fenway.

Like · Reply · 11w

GabrielJohn Chassé So many good sized cities throughout the country seem to be going for this modern generic look.

Like · Reply · 2w

Jennifer Lunden This horrifies me.

Like · Reply · 11w · 2

Jennifer Lunden And it reminds me of the time a couple years ago when I was driving through that part of town, an area I was familiar with, having worked there for 3 years, and at the end of the street I took a right and for a minute I wondered where I was. Nothing was recognizable, and nothing felt like Portland.

Like · Reply · 11w · 1

Sarah Lundin-Erickson This is real? Wow! This is not Portland.

Like · Reply · 11w · 1

Thomas Ross sad to see great neiborhoods bulldosed for a few bucks....

Like · Reply · 11w · 2

James Cagney IV The alien ships have landed.

Like · Reply · 11w


Terri Pierce-Moriarty Disgusting
Like · Reply · 11w
Anthony Taylor Generic facades. While this sort of thing is busting out up and down the coast, New England's hour from the coast decaying industrial burgs are losing their architecturally significant old buildings and filling up with low lifes and vacant lots. The water view-front is turning out like the Bronx or the Fenway.
Like · Reply · 11w
GabrielJohn Chassé So many good sized cities throughout the country seem to be going for this modern generic look .
Like · Reply · 2w
Jennifer Lunden This horrifies me.
2
Like · Reply · 11w
Jennifer Lunden And it reminds me of the time a couple years ago when I was driving through that part of town, an area I was familiar with, having worked there for 3 years, and at the end of the street I took a right and for a minute I wondered where I was. Nothing was recognizable, and nothing felt like Portland.
1
Like · Reply · 11w
Sarah Lundin-Erickson This is real? Wow! This is not Portland.
1
Like · Reply · 11w
Mimi Grampy No Character! No Charm ! No Portland!
2
Like · Reply · 11w
Ivory Wind Rieger I've been taking all my old Portland peeps for the tour of this street and they all gape and shake their heads "NO" along with me.
Like · Reply · 11w
Fred Trout one of the sad parts is that the people on the left side of the street thought they were getting a water view, but then the buildings on the right side of the street blocked the view of the water. too bad.
1
Like · Reply · 11w
Thomas Joyce It looked so much better with the two grain elevators
6
Like · Reply · 11w
Jennifer Kastelic I've gotten very disoriented a few times there.
1
Like · Reply · 11w
Marie Eger Portland Planners brought in too many modern buildings and took away the charm.
3
Like · Reply · 8w


GabrielJohn Chassé Like a cheap takeoff of Boston
Like · Reply · 2w
2
Thom Sambrook There are no "Neighborhoods" anymore. Sad.
Like · Reply · 2w
3
Roger Mayo There are still neighborhoods. I own a house in one of them, it's called Parkside. Lovely old apartment buildings and tree lined streets.
Like · Reply · 2w
1
Thom Sambrook Hoping our neighborhood lasts....
Like · Reply · 2w
Peter Green What would Henry write? A lamentation.
Like · Reply · 1w
1
Terry Thompson Westberry its so sad
Like · Reply · 1w
Susie Hughes Fat local lawyers faked a clearing of eminent domain and then later owned Portland properties search the title and find they should never have own these properties
Like · Reply · 1w
1
Elizabeth Ruby Simkoff And it looks like anytime USA now!
Like · Reply · 1w
1
Anthony Taylor Nondescript and generic architecture with no sense of place or local inspiration. Comparable to the "new-old fashioned" brick facades in the shopping center that was built to replace the failed Worcester Center Galleria mall.
Like · Reply · 1w
3
Lex Jones It's like there has been another Great Fire.
Like · Reply · 6d
Bob Farrington The collapsed birth canal of architecture.
Like · Reply · 6d
Ray Pe Benito There are some New Amazing buldings in Portland.Portland in the 70s had been i.n Decay .Its how life is we must lose something to gain something.I would rather see New modern then run down blight.There are still plenty of older buildings to admire lets save them and keep them useful.
Like · Reply · 4d


Sheila Coughlin It's awful!
Like · Reply · 4d
Rachelle Cliche I grew up in munjoy south. #60, the first lot on Fore going up the Prom. Literally around the bend from this picture. All I can think of is Jordan's Meats and the village around the corner, and the old Crosby lot (where most of this is built) where we used to play stick ball then climb the fence and walk the deserted tracks. Very surreal and sad in so many ways.
Like · Reply · 4d · Edited
5
Bonnie Blythe The developers talk about what an improvement this is over the "wasted space". We loved that wild land waterfront. I'm sure they think Munjoy South is "wasted space" too
Like · Reply · 4d
3
Paul Luise If shown that picture to identify I'd never have guessed Portland.
Like · Reply · 3d
John Furman It's like 1960 all over again. Sad.
Like · Reply · 19h

Appendix B

From: Design Manual promulgated by the Planning Authority pursuant to Sections 14-498 of the City of Portland's Land Use Code. "Design Standards and Guidelines and maps contained as appendices to this Design Manual were individually adopted by the Planning Board or City Council following public Hearings."

R-6 Infill Development Design Principles & Standards

From: Purpose

I. All developers, no matter how small their project, have a responsibility beyond simply meeting the needs of their end users. They have a public responsibility to add to and enhance the neighborhoods in which their projects are built. **New residential construction within Portland's compact R-6 zones should relate to the predominant character defining features of the neighborhood.** The design of new development is critical, particularly elements such as the orientation and placement of a building on a site; relationship to the street; and mass, form and materials. The Design Certification Program aims to insure that infill housing development makes a positive contribution to the City's neighborhoods.

The intent is to ensure that infill housing is compatible with the neighborhood and meets a high standard of building design, while allowing for diversity of design. Projects will be reviewed for consistency with R-6 Infill Development Design Principles and Standards. These principles and standards are interdependent and should be considered holistically. The applicant must demonstrate that a proposal is consistent with the Design Principles. The standards are time-honored ways of achieving the Principles.

II. DESIGN PRINCIPLES AND STANDARDS

PRINCIPLE A Overall Context

A building design shall contribute to and be compatible with the predominant character-defining architectural features of the neighborhood.

Explanatory Note: The central idea behind good design in an established neighborhood is to reinforce positive features of the surrounding area, which provide its unique identity. To a large degree, the scale, mass, orientation, and articulation of an infill building should be compatible with that of the buildings that surround it.

Compatibility refers to the recognition of patterns and characteristics which exist in a given setting and the responsiveness of a new design with respect to these established patterns and characteristics. While there is no one specific solution for a given setting, there are a number of

building characteristics which can be used to gauge visual compatibility of new residential construction in an existing neighborhood. These characteristics include design elements such as:

1. Scale and Form: height, massing, proportion of principal facades, roof shapes and scale of the architectural features of the structure.
2. Composition of Principal Facades: proportion of facades; orientation of openings; ratio of solids to openings; rhythm of fenestration; entrance porches and other projections; and relations of materials, texture and color.
3. Relationship to the Street: walls of continuity; rhythm of spacing and structures on streets; and orientation of principal elevations and entrances to the street.

Each infill project will have a unique context of surrounding structures and sites with some strong, unifying characteristics, and some that are subtle and less obvious. The more definite and easily discernable traits within an established neighborhood should serve as a basis for a design solution, which can reinforce the positive characteristics of the surrounding development patterns.

On corner properties, where the architecture has a greater visual impact upon adjacent public spaces, both public facades will be evaluated with equal care.

STANDARD A-1 Scale and Form Relate the scale and form of the new building to those found in residential buildings within a two-block radius of the site, that contribute to and are compatible with the predominant character-defining architectural features of the neighborhood. Special attention shall be given to the existing building forms on both sides of the street within the block of the proposed site.

STANDARD A-2 Composition of Principal Facades Relate the composition of the new building façade, including rhythm, size, orientation and proportion of window and door openings, to the facades of residential buildings within a two-block radius of the site that contribute to and are compatible with the predominant character-defining architectural features of the neighborhood. Special attention shall be given to the existing facades on both side of the street within the block of the proposed site.

STANDARD A-3 Relationship to the Street Respect the rhythm, spacing, and orientation of residential structures along a street within a two-block radius of the site that contribute to and are compatible with the predominant character-defining architectural features of the neighborhood. Special attention shall be given to the existing streetscape on both side of the street within the block of the proposed site.

PRINCIPLE B Massing

The massing of the building reflects and reinforces the traditional building character of the neighborhood through a well composed form, shape and volume.

Explanatory Note: Massing is a significant factor that contributes to the character of a building. The building's massing (as defined by its bulk, size, physical volume, scale, shape and form) should be harmonious with the massing of existing buildings in a two block radius. The massing of a building can be defined as the overall geometry (length, width, and height) of its perceived form. The overall height of the form (actual and perceived) as well as the geometry of its roof is of particular importance in defining the massing of a building.

STANDARD B-1 Massing The building's massing (as defined by its bulk, size, physical volume, scale, shape and form) should be harmonious with the massing of existing buildings in a two block radius.

PC33

October 30th, 2019

To the Historic Preservation Board, the Planning Board, City Councilors, and Mayor Strimling:

Munjoy Hill does not need restrictive historic preservation. We need more creative, forward looking policies that address real issues in our neighborhood and city rather than restrictive policies that put aesthetics ahead of other community values.

1) This is about aesthetics rather than history. Aesthetic preferences for other people's properties are not good grounds for restrictive and costly policy.
2) The proposal actively prevents environmentally sustainable development.
3) The proposal will drive up the costs of maintenance of properties.
4) The proposal will not help with affordable housing or community as some proponents believe, and will in fact work against these values.

First, this proposed districting is not really about history; it is about aesthetics. The meetings I have attended are full of people simply saying how much they hate the look of certain houses. But aesthetic preferences about a house that isn't yours are not good grounds for restrictive policies.

If this were really about history, we would be more mindful about whose history it is, why we are preserving it, and who we are preserving it for. The Portland Historical Society has done a wonderful job documenting the history of the hill, and arguing that there is value not just in the history of the rich, but also the working class. While I agree with this, it is distasteful to coopt the history of the working class in service of the interests of people who are largely not working class. We should not appeal to history of the working class to preserve "cute" or "quaint" buildings for tourists' Instagram photos. We should not appeal to the history of the working class to further raise the property values of people living in houses that are well out the reach of even the middle class worker. If this was really about the history of Munjoy Hill – rather than simply a certain aesthetic – then the policy would need to help actively increase the access to properties on Munjoy Hill for the working class.

Second, this plan elevates historic preservation over other values we ought to promote. For example, within this proposed ordinance there is no way to balance preservation against environmental sustainability. Sustainability is, of course, supported by not tearing down buildings for no good reason. But in certain cases sustainability may require this; in adopting policies that help drive up prices even further, we continue to force those who work in Portland further out into the suburbs and other towns. This brings more traffic congestion and pollution, which could be alleviated by smart planning of new housing on the peninsula. On Munjoy Hill we have many small single family houses providing shelter to 1 or 2 people that are occupying plots of land which could have 12-16 units built on them – or more, if we did not have such strict height restrictions.

The proposed districting also effectively prohibit solar panels and solar hot water for most residents (they're allowed, but only if not visible from the street). This is a completely ridiculous restriction even if you are in favor of historic districting. Solar hot water or panels hardly impact the historic aesthetics of a building – less certainly than having modern cars on the street or in our driveways, or modern lightbulbs in our streetlights and over our front doors. In requiring a particular aesthetic, we prevent smartly designed passive solar buildings as well. In a time of increased urgency to slow climate change we should not be adding restrictions on residents doing a small part for sustainability.

Some residents have argued for historic preservation on the basis that development makes us lose affordable housing. Million dollar condos do nothing to help affordable housing; however, neither does a historic district, and it will actively prevent us from enacting solutions to housing problems. In keeping the housing density as it is, the city will be unable to add more affordable units. In driving up the costs of maintenance of buildings (requiring particular siding, windows and details rather than what the home owner can afford), it will add to the cost of renting or owning those buildings. While the proponents of this districting claim that it will not be more expensive to follow the restrictions, the quotes I have received for replacing my wood shingles with a similar product are more than *twice* the cost of replacing it with vinyl (Wood: $35,000; Vinyl $17,000).

As I watch a house nearby be renovated, and see the multiple layers of siding being removed, it strikes me that the history of Munjoy Hill is reflected in each owner's choice of a more affordable material than the last, rather than some well-to-do current resident's fantasy of what Munjoy Hill was like at some arbitrary past time. While proponents also argue that no one is requiring someone to replace their siding, at some point houses require this sort of maintenance. Historic Districts are expensive for residents. Friends of mine in the West End Historic District live with extremely drafty old single-pane windows because they couldn't afford to have custom windows made. This is inappropriate for a historically working class neighborhood, and will help drive out those on lower-incomes who are still residents.

I've also heard neighbors expressing a desire for community, and the mistaken belief that this proposal will help us strengthen community bonds. Yet nothing about this proposal does this (and the aesthetic judgments driving this proposal actively work against community feelings; imagine attending a meeting where a large number of your neighbors spend their time simply complaining about how ugly they think your house is). I suspect this is founded on the idea that the owners of newly built condos are more likely to be coming in from "away". The idea that those from elsewhere care less about their new home is founded more on distrust of difference than anything concrete. Moreover, we have no reason to think that keeping Munjoy Hill frozen in time will do anything to prevent people from spending little to no time in the community.

Our house (which we live in permanently) is surrounded on three sides by properties owned by people from out of state. These properties are not newly built condos, but older houses that roughly approximate what those supporting the historic districting want to preserve. One unit is occupied by the owner about one week per year, and otherwise empty. Another is rented out

to short term tenants. Another is rented out to a long-term tenant who is, in her retirement, not in residence year-round. As the population on Munjoy Hill ages and we do nothing to make it more affordable for younger families, we can't expect our neighbors to be there year-round. The last one was purchased recently, from out of state. It is currently being renovated and will likely also be a short-term rental. These are lovely, old buildings – but nothing about lovely, old buildings makes people who own them involved in the community in a robust way.

In closing, I am not arguing for unfettered development, or for more expensive condos to be built. I am urging the Planning Board and City Council to think more creatively about how to promote the good of people on the hill – and not just preserve buildings for aesthetic reasons. Aesthetic preferences of a few people is not a good ground to drive up maintenance costs, nor should it upheld in such a way that it prevents the realization of other values.

Sincerely,



Lauren Ashwell
Resident and owner of 8 Emerson St, Munjoy Hill, Portland.

Greetings,

I am writing you today to voice my vehement opposition to the proposed Historic District Overlay in the East End/Munjoy Hill area of Portland. I have attended most of the informational meetings at the East End school and City Hall about the historic district and at no point did a single individual promoting the overlay convince me that it is good, necessary, or that it will not harm current and future residents of Munjoy Hill. I feel like I could write multiple pages about this subject but I will try to make my arguments as succinct as possible.

-The historic district will absolutely cause financial harm to residents, that is known. The current lack of historic district hurts absolutely no one. How do you justify that? There are people that fled the West End of Portland to the East End when that historic district went into effect, their testimony to the financial harm it caused them is much stronger and more compelling than the promises and hand-waving of the Historical Society.

-Implementing a historic district will destroy the community on the hill. You cannot have a sense of community when some elite members of the neighborhood are forcing financial burdens on you to appease their aesthetic views. The cost to reside our house on the hill will increase by an additional $17,000 under the historic district. That is two thirds of my income for an entire year. People in my situation will never forgive the people that callously push for the historic district or the city council members that vote for it.

-Proponents of the regulations say it will help tourism. Tourists do not come to Portland to look at bland, questionably historic, cookie cutter three story apartment buildings. They come for the restaurants and the people. Tourists do not come to the East End to look at a handful of oldish buildings tucked away on back streets, they come here for the dining and the natural beauty of the Promenade.

-As one of the youngest persons at those meetings - I can assure you that future generations do not want this historic district. People arguing that the historic district is preserving the look and the feel of the hill for young people is so tragically misguided and blind. Young people want affordable and abundant housing, not windows cut to certain historical measurements.

-The included ban on solar panels (the wording is a ban no matter how supporters phrase it) is unconscionable. At at time when our environment is being destroyed by the fossil fuel industries it is unethical to place bans upon the incredible energy resource that solar panels represent. This alone should be enough reason to reject the proposal.

Thank you for your time reading my letter and I hope that you will support the rejection of this harmful historic district legislation.

Travis Agaman
8 Emerson Street
Portland

Google Groups

Vote to Make Munjoy Hill an Historic District

Liz Hays <lizchays@gmail.com> Nov 8, 2019 11:19 AM
Posted in group: **HIstoric Preservation**

Dear Historic Preservation Board Members

I strongly encourage you to vote in favor of having an historic district on Munjoy Hill. This will preserve its historic character which is vital to having people want to stay and live there. It also helps to draw tourists, from within Portland and around the world, to the area which supports local businesses and attractions.

Thank you for considering my request.

Liz Hays
107 North Street
Portland, ME

Google Groups

Historic Housing

Mart99 <mart99fish@gmail.com> Nov 8, 2019 6:41 PM
Posted in group: **HIstoric Preservation**

Please preserve historic Munjoy Hill.

Also Portland. Maine needs a lot more affordable safe and clean housing. Pet friendly, too.

Google Groups

Support for Munjoy Hill Historic District

Barbara Vestal <vestal@chesterandvestal.com> Nov 13, 2019 5:45 PM
Posted in group: **HIstoric Preservation**

Hello Deb,

I want to add my voice to those who support the designation of a local historic district on Munjoy Hill. My husband and I own the building at 101-107 Congress Street which is proposed to be designated as a landmark building. We also own buildings at 22 O'Brion Street (6-units with an adjacent vacant lot) and 14-16 North Street (6-unit), both of which are identified as contributing buildings. We would be pleased to have them included in a Munjoy Hill Historic District designation.

Forty-two years ago, we moved to Portland with a plan to establish our home and our office on Munjoy Hill in large part because of the special qualities of this neighborhood. The historic architecture has always been one of its compelling character-defining features. But the authenticity of place, the maritime connection, and the cultural diversity were large draws as well.

Certain active market forces, which are pervasive in many cities in addition to Portland, are driving demolitions, generic and expensive new structures, and insular design. These are all threats to Munjoy Hill's sense of place, its cultural diversity, and its architectural heritage.

I believe recognizing key parts of the neighborhood as a local historic district will give us one more tool to help manage the change on the Hill. Ideally this change can be harnessed it so it will be more likely to produce greater retention of the existing affordable housing stock which is now contained in landmark and contributing structures, and more sensitive in-fill development in those few locations where new construction is appropriate.

It is past time for Munjoy Hill to receive the same protections as the City has accorded to other peninsula neighborhoods for almost 30 years. We will be richer as a City if we act to protect our unique built heritage in all of our neighborhoods.

Regards,

Barbara Vestal

--
Barbara A. Vestal, Esq.
Chester & Vestal, PA
107 Congress Street
Portland, Maine 04101
(207) 772-7426 - phone
(207) 761-5822 - facsimile

This message is intended only for the use of the individual or entity to which it is addressed and may contain information that is privileged, confidential and exempt from disclosure under applicable law. If the reader of this message is not the intended recipient, you are hereby notified that any dissemination, distribution, or copying of this communication is strictly prohibited. If you have received this message in error, please notify us immediately by telephone and e-mail.

Google Groups

Designating Munjoy Hill as an Historic District

Francesca <cesca.gs@gmail.com> Nov 14, 2019 3:09 PM
Posted in group: **HIstoric Preservation**

Dear HP Board Members,

The Munjoy Hill neighborhood is a Portland treasure full of historic architecture and a great sense of place.

Please vote to make it into an historic district so that its character may be enjoyed by future generations.

Many thanks!

Francesca Galluccio-Steele
22 Clifford St
Portland, ME 04102
cesca.gs@gmail.com

Google Groups

Munjoy Hill Public Hearing Comments

Julie Larry <jlarry@portlandlandmarks.org> Nov 14, 2019 12:33 PM
Posted in group: **HIstoric Preservation**

Deb,

A ached please find Landmarks' comments on the proposed Munjoy Hill designaons t o include in the public comment package.
Thank you.
Julie

Greater Portland Landmarks

Historic character enriches our lives

14 November 2019

Dear Chair Sheridan and members of the Historic Preservation Board,

As you know, Greater Portland Landmarks supports the proposed designation of several individual buildings and a historic district on Munjoy Hill. We appreciate the enormous amount of work the consultants and staff completed in preparing the nomination. We also appreciate the thoughtful discussions of this board at its workshops and the opportunities the board and staff have made for the public to engage in the decision making process.

Our organization was founded on the belief that Portland's future is brighter if it builds upon the rich social, cultural, and architectural character of its past. Historic Preservation is not about freezing any community in time. Rather, historic preservation looks to preserve enough of the built environment that establishes a city or a neighborhood's sense of place while accommodating new development and the needs of contemporary life.

Through this city's commitment to historic preservation and the work of this board, we believe Portland has been successful at achieving a balance between old and new. The inherent flexibility in the historic preservation ordinance has permitted alterations and new construction at a variety of scales in the city's local historic districts. These new additions within the various districts have enhanced our city's streetscapes while accommodating new residential and commercial growth. Hundreds of new housing units, including more than 325 units of affordable housing, have been built or permitted in the last several years in individually designated buildings and in the West End, Parkside, India Street, and Congress Street Local Historic Districts.

Historic preservation is one tool that helps our city be more sustainable. Preservation and reuse of historic buildings reduces resource and material consumption, puts less waste in landfills, and consumes less energy than demolishing buildings and constructing new ones. In addition, the preservation program has approved environmentally friendly building systems like heat pumps and solar panels, which help to achieve the city's sustainability goals.

Portland is a desirable place to live and to visit in part because it retains its unique character as a historic coastal community and because it is a vibrant city open to growth and change. The Munjoy Hill neighborhood is as worthy of local historic district designation as the West End, the Old Port, or India Street. We strongly believe that the proposed designations will allow the Hill to retain its sense of place, while accommodating future change. We hope that you will unanimously support the proposed individual and district designations on Munjoy Hill on Wednesday night.

Thank you for your consideration of our views.

Julie Larry
Director of Advocacy
Greater Portland Landmarks

Google Groups

Support for Historic Districts

Rhoda Renschler <rsrensch@msn.com> Nov 14, 2019 10:18 AM
Posted in group: **HIstoric Preservation**

As a frequent supporter of many businesses on Munjoy Hill, I support the proposed historic district and designation of architectural structures.

Rhoda Renschler
37 Channel Road
South Portland, ME 04106

Get Outlook for Android

Google Groups

Support for Munjoy Hill Historic District and Landmarks

Sally Oldham <oldhamseg@gmail.com> Nov 14, 2019 1:27 PM

Posted in group: **HIstoric Preservation**

Greetings: Attached is my statement of support for the proposed Munjoy Hill Historic District and individual Landmarks. I would appreciate your including this in the public record and distributing it to members of the Historic Preservation Board.

Thank you,

Sally

14 November 2019

Dear Members of the Historic Preservation Board,

I want to voice my support for the designation of several individual landmark buildings and an historic district on Munjoy Hill. I live at 118 Congress Street on the Hill. While my residence is not within the boundaries of the proposed historic district, I feel fortunate that the district boundaries include areas close by as well as two proposed landmark buildings across the street.

I appreciate greatly the extensive effort that has gone into developing these designation proposals and the thoughtful consideration given to residents' viewpoints throughout the review period.

I'm aware that for a number of years many residents of the Hill valued highly the character of their neighborhood yet thought there was no need for historic designations to ensure that this character is not eroded and eventually transformed. The development boom in Portland, taken together with zoning changes of the past few years, however, have changed this dynamic significantly, putting buildings and areas at risk of substantial erosion and change.

I am heartened by the surge of support to preserve and evolve the buildings within the proposed historic designation areas so Munjoy Hill can continue to meet the needs of its residents and also add to the vibrancy of this great city through maintaining its historic streetscapes and character.

I urge you to unanimously approve and recommend to the Planning Board and City Council for their action, the historic district boundaries and historic landmarks as presented at this Public Hearing.

Most sincerely,

Sally Oldham
118 Congress Street Unit 202

Google Groups

Munjoy Hill Designation

Edmund Gardner <ed@gardnerregroup.com> Nov 18, 2019 12:31 PM
Posted in group: **HIstoric Preservation**

Dear members of Portland's Historic Board,

I would like to voice my support for a historic designation to be placed on Munjoy Hill, using the currently proposed map. Though I think that over time, similar to what happened to the West End District, I see this district including more properties of the East End, as it helps tell the complete story of the history of Portland and it significance.

I have had the pleasure of owning and renovating several buildings on Munjoy Hill, including 101 North St. with its beautiful box bay windows, 21 Sheridan St. (recognized as once the home of Portlands' very own writer John Ford) that was renovated from a shell into three condominium units, and 84 Eastern Promenade, a beautiful Victorian structure that is a backdrop for historic Fort Allen. With these and may other appreciated contributing buildings that make up this historically special area, generations to come will get to enjoy the resources that the "hill" provides for and will help stabilize our precious neighborhood as future development happens there.

I do hope that you support this district along with its individual designations. It will be very important to our city, ongoing.

Thank you for helping to keep our city a historically educational asset!

Ed

Ed Gardner, Broker
Gardner Real Estate Group
511 Congress Street
lobby level
Portland, Me. 04101
207-GARDNER. O
207-415-4493. C
www.Gardner**RE**Group.com

Google Groups

Munjoy Hill Historic Preservation Histrict

Maggy W <mswnola@gmail.com> Nov 20, 2019 12:12 AM
Posted in group: **HIstoric Preservation**

Dear Members of the Historic Preservation Board,

Unfortunately I have a conflict on Nov. 20 and will not be able to attend the meeting to review the Munjoy Hill Historic Preservation District, but I urge you to approve this designation. I have lived in this neighborhood for only five years, but have visited my sister here for the past 40 years and have seen so many changes over that time. I loved it 40 years ago and I love it today, but have been dismayed to see the number of beautiful and characteristic 19th century homes torn down in the past few years. I have been a docent at the Observatory for the past 3 years and have enjoyed telling its story to visitors from all over the country and the world. We discuss the Great Fire of 1866 and then we get to the top and so many of these visitors ask about all the construction and new boxy houses that can be seen dotting the neighborhood. They have expressed disappointment that the neighborhood which survived the fire is now being so altered by new construction.

As Ms. Andrews has pointed out in her excellent presentations over the past year and a half, it is not only the history of the architecture that is important, but the story it tells about the social and cultural history of this special place. The hill has housed the working class tied to the growth of the railroad, connections on the Underground Railroad, early 20th century new Americans, to name just a few.

I also want to take this opportunity to thank Ms. Andrews for all the incredible work she has done on behalf of this proposal and to thank the members of the Board who have spent so many hours listening to all of us who care so passionately about this, and who have taken the time to walk the neighborhood and review so many buildings in so much detail.

Please vote in favor of this proposal!

Maggy Wolf
28 Saint Lawrence St.

Portland Maine | Ver. Google's good here.

Jennifer Munson <jmy@portlandmaine.gov>

Fwd: Munjoy Hill Historic District Designation

1 message

Deb Andrews <dga@portlandmaine.gov> Thu, Nov 21, 2019 at 10:58 AM
To: Jennifer Munson <jmy@portlandmaine.gov>

please add to Munjoy Hill public comment

---------- Forwarded message ---------
From: **Diane Davison** <dmdavison5@gmail.com>
Date: Wed, Nov 20, 2019 at 8:42 AM
Subject: Munjoy Hill Historic District Designation
To: Deb Andrews <DGA@portlandmaine.gov>
Cc: Ethan Strimling (estrimling@portlandmaine.gov) <estrimling@portlandmaine.gov>, Nicholas Mavodones <nmm@portlandmaine.gov>, Jill Duson <jduson@portlandmaine.gov>, <jcosta@portlandmaine.gov>, <kcook@portlandmaine.gov>, Belinda Ray <bsr@portlandmaine.gov>, Spencer Thibodeau <sthibodeau@portlandmaine.gov>, <pali@portlandmaine.gov>, <bbatson@portlandmaine.gov>

The Munjoy Hill neighborhood borders Portland's premier historic Olmsted park, the Eastern Promenade. The integrity of this beloved historic landmark and the long overdue historic district covenant for the architecture within this region of Portland go hand in hand.

NOW is the time to support our Historic Preservation Board's (HPB) role to "protect historically and architecturally significant buildings, landscapes and sites from demolition" with support for HPB recommendation to establish the Munjoy Hill District Designation.

Better late than never.

Respectfully,

Diane Davison
29 Morning Street
Munjoy Hill

--
Deb Andrews
Historic Preservation Program Manager
City of Portland
389 Congress Street
Portland, Maine 04101
(207) 874-8726

Google Groups

Munjoy Hill Historic District

Julius Ciembroniewicz <jciemb@gmail.com> Nov 30, 2019 11:43 AM
Posted in group: **Planning Board**

Dear Planning Board Members:

I'm writing in support of the historic district in Portland's Munjoy Hill. The majority of Portland residents strongly support a MH historic district.

I am a Maine native. I am a Portland resident of 20 years and I am owner of property on Munjoy Hill.

If the Planning Board is looking for an example of why a historic district is needed for Munjoy Hill, you need not look further than the demolition/construction project located at 9 Moody Street. This is the personal residence/tower commissioned by commercial developer Jim Brady. It is the best evidence of why Portland needs a historic district.

Describing it doesn't do justice like seeing it from our adjacent building, but attached are a few pictures to give you a sense. The before and after pictures speak volumes.

Our 100 year old building had its views decimated by this new, single family personal residence that rises high above the other rooftops of MH; it is taller than than our building that hosts eight (8) condominiums.

With zero care for the neighbors or the integrity of our historic Munjoy Hill neighborhood, this developer undertook this massive demolition/construction project in our neighborhood -- for a personal residence for himself. It is the proof in the pudding that at least this developer doesn't care about the integrity of the City, or at least as it applies to him and his development projects (he does lots of development in our City). Otherwise, this building, in this fashion, wouldn't exist on MH, 100 feet away from the historic eastern promenade. There are many people with more money who would not do this. That said, unfortunately, there are some that will. The City has an obligation to protects its residents and the integrity of our historic neighborhoods. The only way to do so is to enact the historic district.

Thank you for your attention to this important issue.
Julius

Julius Ciembroniewicz
55 Morning Street
Portland, Maine 04101







Negative Effects of 9 Moody Street Construction:
Demolition of House & New Construction at 9 Moody Street

Before:



Now:



2018 – Before Demolition & New Construction at 9 Moody Street





12.23.18 New Construction at 9 Moody Street

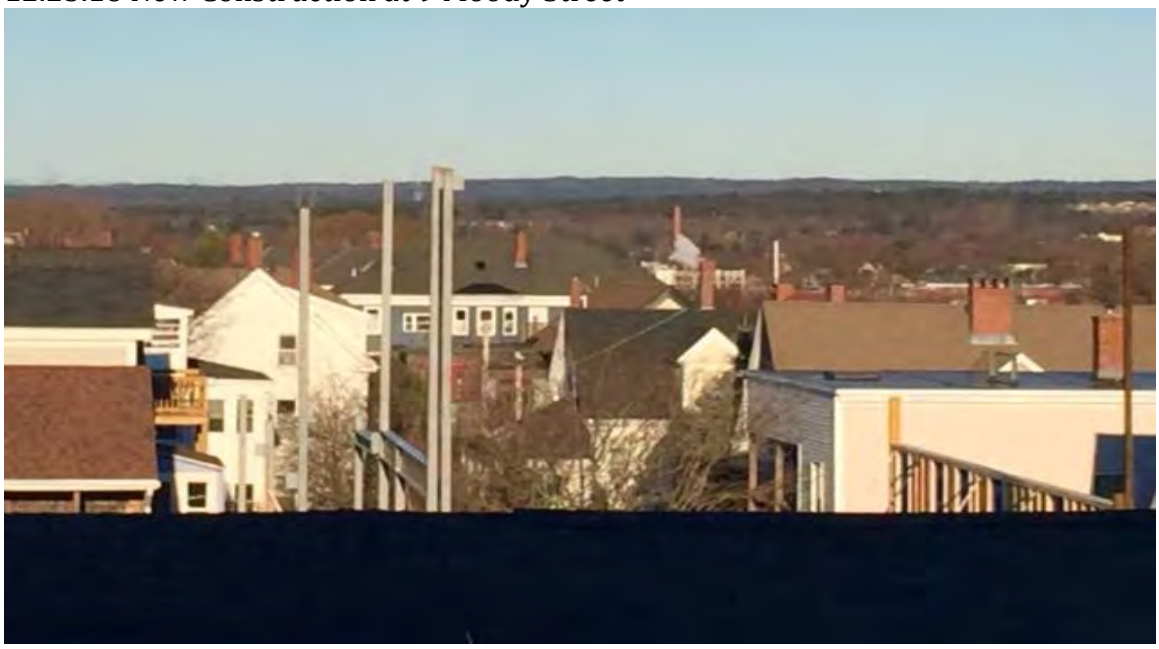

12.28.18 New Construction at 9 Moody Street



1.14.19 New Construction at 9 Moody Street



1.15.19 New Construction at 9 Moody Street

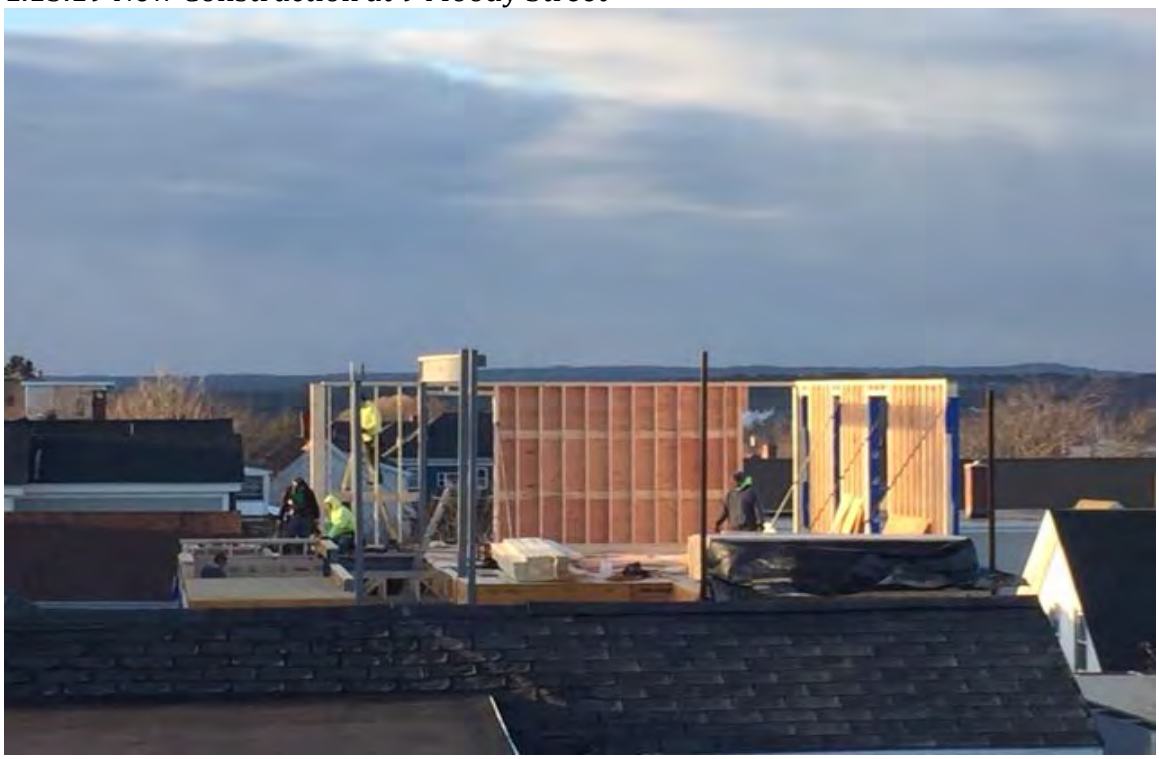

1.15.19 New Construction at 9 Moody Street



1.15.19 New Construction at 9 Moody Street



1.15.19 New Construction at 9 Moody Street



1.28.19 New Construction at 9 Moody Street



1.29.19 New Construction at 9 Moody Street



1.31.19 New Construction at 9 Moody Street



Google Groups

Historic District for Munjoy hill

e w <eenebw@hotmail.com> Nov 30, 2019 6:41 PM
Posted in group: **Planning Board**

Hi: I just wanted to send the comment I made to Carl Henry's anti-Historic district in case you read the article. As a 30 year property owner of two 3 units on Beckett Street I 100% support being under a district. I have no special interests or investment goals other than just a respect for 1800 era architecture that is becoming rare these days in our country.

My comment

"

Well you know what It is not a small group of people of 8 to ten people that want a historic district. There are many that want Munjoy hill saved from the likes of people with interests like you and Lori. In reality it is a small group of 8 to 10 developers and people from other states/towns that want the hill to be their private palace or to fulfill their money making desires. BTW how did you manage to get a front page article about this. That in itself smells like special interest. There are several districts in Portland already and I personally challenge you or Lori to give some facts from owners in those districts depicting the """Horrors """ of being in a district. To the majority of Hill people developers and people that move in and want to tear down and rebuild are the real villains. Do you really think that the majority of current and past Munjoy hill residents want the hill to be razed and in its place boxes built??

":

Google Groups

Munjoy Hill Historic District

James Hambly <jphambly@hotmail.com> Dec 1, 2019 8:52 AM
Posted in group: **Planning Board**

Dear Deb Andrews,

We would like to express both our support for the Munjoy Hill Historic District and our thanks for the efforts of everyone involved to bring the designaon t o reality.

The Munjoy Hill neighborhood has a look and feel we both love and enjoy every day. Dramac chang es to some of the properes o ver the last few years have, in our opinion, been detrimental to that look and feel. Change does need to take place and, going forward, we look forward to the Historic Preservaon Departmen t having guidance over that change.

Thank you.

James Hambly and Jenny Dignan
61 Monument St.
Apt 4
Portland, ME 04101

Google Groups

Munjoy Hill Historic District

Wayne@redhookdesignalliance.com <Wayne@redhookdesignalliance.com> Dec 1, 2019 10:12 AM
Posted in group: **Planning Board**

Members of the Portland Planning Board,

I am a resident of Munjoy Hill (27 Merrill Street) and am writing to express my full support for the creation of a Historic District as proposed, and in further iterations should, encompass as much of Munjoy Hill as possible. We moved to Portland, and chose Munjoy Hill in particular, because it has the charm and atmosphere of old New England. In the time that we have been here, we have observed that unlike many similar small cities, including our neighbor to the south, Portsmouth, that there doesn't seem to be an appreciation for what makes Portland an attractive tourist destination and affordable place to live. While I understand the demands placed on the city, it's infrastructure, its finances, and the potential for developers to seize a wind-fall opportunity of a lifetime, I feel that it is the responsibility of the City Council to identify the essence of Portland, and to plan growth through a cohesive and protective city plan. Munjoy Hill is a fragile ecosystem of it's history as a working class neighborhood, it's location in proximity to Casco Bay and Back Cove, and a diverse population who want to live in traditional New England neighborhoods. We latecomers have paid dearly for a piece of that Munjoy Hill turf, and we continue to invest as we restore and repair the buildings that contribute to the East End aesthetic. We invest because it's where we want to live, not for a fast and tidy profit before moving on to the next opportunity, and because we want to make it better.

For all the good that he thought he was doing in New York City, in the end, the legacy of Robert Moses, is that he destroyed the fabric of its neighborhoods and made it an unlivable city for all but the wealthiest. Having lived there, worked there, and left there, I can testify that I do see similarities that are to be learned from, and that are avoidable. Portland has great potential for everything that it needs and for everyone who choses to live here. That requires careful planning, creative development, and an appreciation of what makes Portland special. It's the role of the Portland Planning Department and the City Council to provide the wisdom, the guidance, and the protections for that to happen.

I wholeheartedly support the Munjoy Hill Historic District.

Thank your for the work that you do and for your support of the Munjoy Hill Historic District,

Wayne

Wayne Valzania MS CPM

27 Merrill Street

Portland, ME 04101

207-274-4918

Wayne@RedHookDesignAlliance.com

RedHookDesignAlliance.com

Google Groups

Munjoy Hill Historical District

mreppenhagen@yahoo.com <mreppenhagen@yahoo.com> Dec 1, 2019 3:02 PM
Posted in group: **Planning Board**

Dear Planning Board Members,

I am writing to you as a resident of Munjoy Hill who is very concerned about the historic integrity of our neighborhood, as are many of my friends and neighbors in this part of the city. I am very much in support of the creation of a Historic District, and I urge you all to also support it wholeheartedly!

Respectfully,

Marlies Reppenhagen

55 Morning St. 2-2
Portland, ME 04101
207-939-4944
mreppenhagen@yahoo.com

Google Groups

Historic Preservation FOR Munjoy Hill

Pa Ag <pagopian1@yahoo.com> Dec 1, 2019 4:18 PM
Posted in group: **Planning Board**

I was in attendance at the most recent HP Board Meeting as I have been for many other public meetings re: HP for Munjoy Hill. This meeting was no different in respect to the overwhelming support in favor of a Preservation District for Munjoy Hill. As I said “it has been long overdue” and I would have preferred a Conservation District for the entire neighborhood. Contrary to Carl Henry’s observation it is NOT a small group.
I have been a 40 yr. property owner, not a silver spooned millennial or trustafarian. I am a 69 year old on a fixed 30k income and still working, probably until I drop (good lord willing). Of that 30k almost 7Ik is for property taxes and is sure to go up after the evaluation. After food, utilities and insurances (you do the math) I began conversations regarding Conservation in April of 2016 after hearing concerns at the District 1 annual meeting regarding the many demos. Then as now there is wide concern about preservation for our neighborhood. My neighbors as many others are ready and in support. It is the right thing to do. I would put my house in protection status because it is outside the boundaries but cannot for various reasons so all I can and will do is put it in trust. If CarlHenry feels it unnecessary he need not fear it!!! I urge the Planning Board and City Council to unanimously support it!
Paula Guillemette Agopian✌
Sent from my iPhone

Google Groups

Munjoy Hill historic district

Anita Stewart <astewart@portlandstage.org> Dec 1, 2019 4:48 PM
Posted in group: **Planning Board**

Hello: If something is labeled "undeveloped" or "non contributing based on extent of alteration" do those parcels still fall under the historic designation or is there the potential for people to build whatever they want. Thanks so much for your help. Best . Anita

Anita Stewart
Executive & Artistic Director
Portland Stage Company
25 A Forest Ave/ Portland ME 04101
(207) 774-1043 ext 106
astewart@portlandstage.org

Google Groups

Munjoy Hill Proposed Historic District

Lori Rounds <lori.j.rounds@gmail.com> Dec 1, 2019 5:36 PM
Posted in group: **Planning Board**

Dear Mr. Dundon and Ms. Grimando:

I have attended most of the public meetings and workshops held by the Planning Department and the Historic Preservation Board regarding the potential designation of portions of Munjoy Hill as an Historic District (HD). The meetings have offered much discussion on the history of the neighborhood; criteria for buildings to be classified as historic; where the boundaries of the HPD should be drawn; what property owners can and cannot do to their properties in an HD; and the desire to retain the historic character of the neighborhood. However, there has been little data-based discussion of the impact of the current Munjoy Hill Neighborhood Conservation District and existing Portland HD's on housing availability, demolitions, property values and property taxes.

The Munjoy Hill Neighborhood Conservation District (District) was implemented in June 2018 (after a six-month moratorium on demolitions) in response to concerns that demolitions of existing housing on the Hill and the design and size of new construction were damaging the character of the neighborhood and reducing the availability of workforce housing. The June 2018 District rules provided significant restrictions on demolitions and new housing design and dimensions in an effort to minimize demolitions and mandate design similar to existing architecture on the Hill. The new rules have been in place for 18 months and data has not yet been published that quantifies the impact of the new rules.

This message is to request that the City provide data at the December 10, 2019 Planning Board Workshop to assist Planning Board members as well as residents in determining the full impact (costs and benefits) of the proposed Munjoy Hill HD. Specifically:

- How many demolitions occurred under permits issued from the 2015 zoning changes to December 2017 (moratorium start), by year if available?
- How many exterior demolition permits were issued from June 2018 to present for properties on MH under the new District rules? My review of the CSS permit data indicates that four exterior demo permits were issued (110 Sheridan, 47 Monument, 37 Montreal, 128R North) but the City will have accurate information.
- How many demolitions have occurred under the new District rules?
- What was the net change in the number and type (condo, single family, two-family, multi-unit, workforce housing,etc) of MH dwelling units from 2015 to December 2017 vs June 2018 to present, based on building permits issued?
- What is the number and type of new dwelling units proposed for MH but not currently permitted?
- Does the City have data regarding the impact of current Portland Historic Districts vs non-Historic Districts on:
    - property values and property taxes
    - number or percent of rental units including how many rental units are considered workforce housing
    - cost of property renovation/maintenance
    - time required for additional City Historic Preservation staff review of renovation/maintenance/demolition applications?
    - references to online reports or other relevant data regarding the impact of historict districts on housing, property values, taxes, maintencnce costs, etc.

I appreciate any data that the City can provide regarding the above inquiry. Many thanks for your assistance.

Regards,

Lori Rounds
47 Monument Street

Google Groups

proposed Munjoy Hill historic designation

Kate Howe <katejhowe@gmail.com> Dec 2, 2019 10:12 PM
Posted in group: **Planning Board**

Dear Planning Board,
I am writing to record my **opposition** to the proposed historic district on Munjoy Hill.

As a resident of the Hill, it seems to me that the process is being pushed through by a minority of very vocal residents, who seem to yearn for the past and have extra time to be activist on this issue. We are working parents of a young family on the Hill, with 2 children at East End School, planning on this being our forever home. I feel strongly that I don't want this vibrant and creative neighborhood made into a museum, but do not have the extra time to attend meeting after meeting and speak loudly about the issue. I believe other younger residents of the Hill feel similarly against or indifferent, but don't have the time to be activist on yet another issue.

The reasons I oppose the historic designation include:
- Despite its popularity and building boom, the majority of properties on the Hill still badly need renovation and restoration. A historic designation increases costs and decreases the flexibility and satisfaction of owners making those investments.

Have you done an analysis of the anticipated increase in renovation costs, including more professional consultations, specific material and design requirements, and decreased utility from the finished spaces in order to conform to historic standards?

Have you analyzed how many properties that might have been renovated, will NOT be renovated because of the extra demands of a historic regulation?

Are you comfortable mandating these increased costs to property owners to appease the nostalgia of a small group of current residents?

- The Hill is a diverse, vibrant, creative neighborhood. Architectural styles should be allowed to evolve with the times just as other forms of culture and lifestyle. Imagine if somebody mandated that you had to wear the exact clothing from 100 years ago, and only listen to the music from 100 years ago, and only eat food from 100 years ago, and only drive cars from 100 years ago... oh wait, most people didn't have cars back then, which is one of the (many) reasons historical patterns of development are not appropriate / adequate for contemporary conditions. The point is, it's a ridiculous idea... so why is it even entertained in architecture??

Are you comfortable regulating taste in this arena in a way it would never be regulated in any other arena, and in a way that goes against the progressive and diverse values of Portland?

- Anybody who wants to do a historic renovation, or list their property would be welcome to do whatever they want. I don't believe they have the right to regulate the stylistic choices of their neighbors. Also, if lots of people want historic homes, then the market will reward that type of renovation, and there will be plenty of it anyway.

- There is a housing shortage city-wide, and the Hill is one of the most popular neighborhoods. A historic designation would make it even more expensive, and therefore "elitist" and unaccessible.

Have you done an analysis of what a historic designation would do to property and rental prices on the Hill? Does this fit in with our city-plan for more affordable housing?

I understand the issues with scale and setbacks that some people had with the 2015 zoning changes, but those have been addressed with the revised zoning overlay. Those zoning issues should not be allowed to be the excuse for the overreach and heavy hand of a historic district designation.

Thank you,
Kate Howe

--
- -
Kate Howe
40 Quebec Street
Portland, ME 04101
- -

Google Groups

MUNJOY HILL HISTORIC DISTRICT

Berry Manter <berrymanter@yahoo.com>
Posted in group: **Planning Board**

Dec 3,

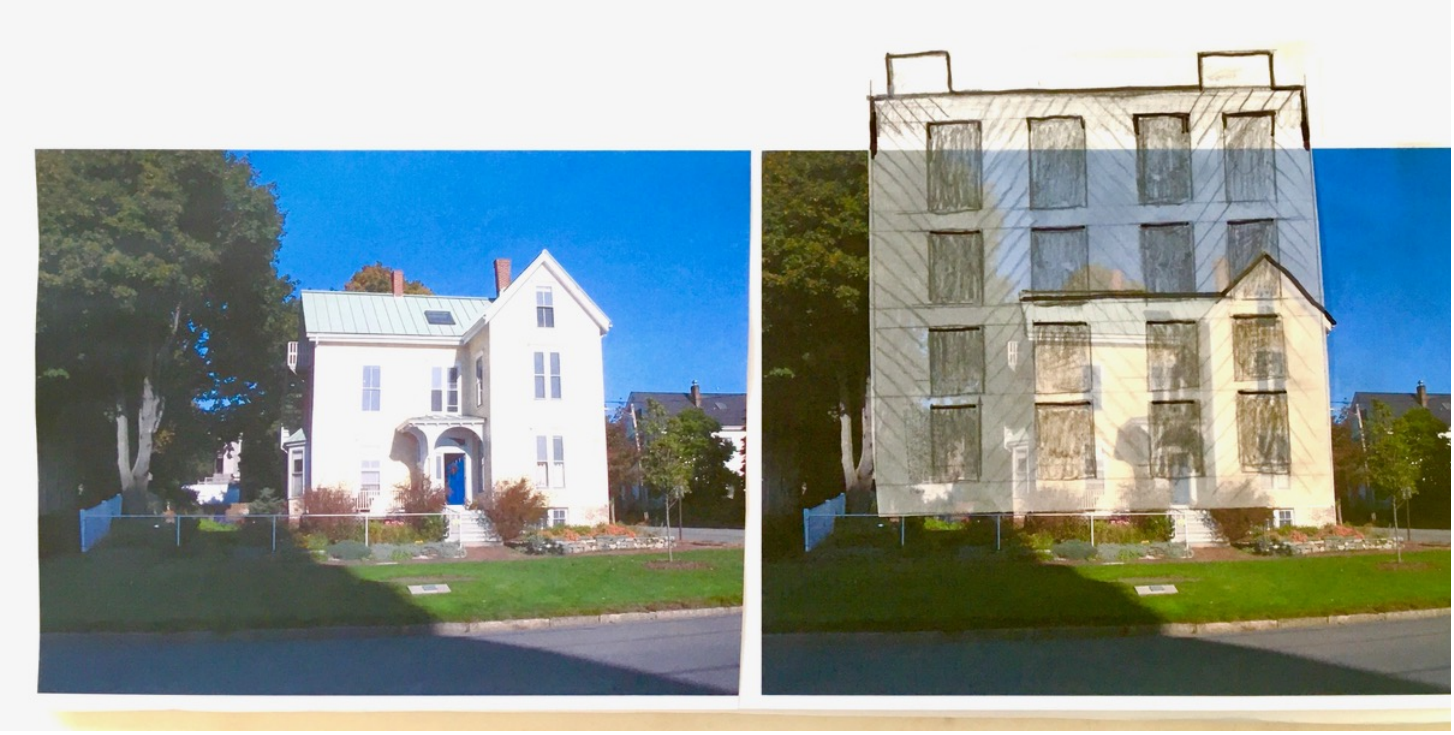

Dear Portland Planning Board Members - December 3, 2019

The photo above shows my property here on the Eastern Promenade overlooking Casco Bay. Each of you have passed by this 150 year old former home to the vice-pres the Portland Company, to the Reiche family, and built by a paint company owner/artist William Gray. I am only its fourth "significant owner" (longterm tenancy). This has been, and is, loved by many.

This building is viewed and photographed by tourists who visit the city by car, by ship, venture on foot and bicycle. Visible from across Casco Bay, it is part of the icon of this city.

The image/sketch to the right shows my home replaced by a PRESENTLY ALLOWABLE STRUCTURE. This represents current construction trends across Munjoy Hi city.

A historic district designation is NOT "anti-development", but PRO-development with *respect to the existing community and architecture*.

All of us, as temporary property owners, or as paid servants to the city of Portland, are but stewards of this city's past, present and future. We are stewards of our neighb our homes, and each other. Our work is to carry the torch of those of our past into the future, as mindful of the bottom line as the quality of life. It asks for a little bit of l short term profit.

I ask that each of you embrace the responsibility to make choices that honor the present as well as the unseen future, to preserve the unique character and features that b each of us here and have sustained us. I ask that each of you honor those who came before us and dedicated time and intention to create and preserve this city for each today.

The historic districting of Portland discourages shoddy profit-based teardown/construction, such as has occurred in both distant and recent past. Much of these "mistake already deteriorating and fail to add value to the context of their neighborhoods. I live across from one that stands as a collective beacon of past failure.

I ask that each of you work to ensure sustainable, efficient, quality development throughout ALL of this city. I ask that each of you work to continue the vision of this ci support longterm development that reflects the aesthetics and values of its history that make Portland the desirable and UNIQUE city we can all continue to be proud of

In going forward, please, also keep foremost in mind that our precious waterfront and sweeping ocean views are, perhaps, one of our *most enduring* iconic assets to our The current trend of towering uninhabitable parking garages and office buildings devouring waterfront land and blocking visual access serve to undermine "quality of li Please, preserve working waterfront and walkable living opportunities for the heart of this city, which will take the pressure off destroying existing fabric of our older neighborhoods.

Yes, *please support* the nominated Munjoy Hill Historic District as presented/approved by HPB without diminishment of scope and intent.

Thank you each for reading this,
Sincerely,

Berry Manter. - 46 Eastern Promenade - Portland - Maine

Google Groups

Dec 10th Workshop Re Munjoy Hill

Carle Henry <cdhenry3@yahoo.com> Dec 3, 2019 11:38 AM
Posted in group: **Planning Board**

Hello,

Please see the attached letter with 8 key business questions for your consideration.

I look forward to attending on the 10th and hearing the responses.

Thank you,

Carle Henry

Portland Planning
Portland City Council

December 3, 2019

Re: Munjoy Hill Historic District

Hello,

In preparation for the meeting on December 10th, I have a number of questions.

1. How does a possible 12th district help the City achieve its recently stated 2030 Carbon Neutral / Climate Change goals? [Reducing the opportunity to make homes more efficient]

2. How does a possible 12th district help the City address the Housing Crisis in Portland? As Mayor Snyder commented, affordable housing is her top priority. It is proven that Historic Districts cause greater challenges to adding affordable housing. (Reference a relevant article from Seattle on this topic) https://www.sightline.org/2017/12/19/when-historic-preservation-clashes-with-housing-affordability/ As West End owners can attest, repairs are so expensive that they pass the costs onto tenants which further limits workforce housing on peninsula.

3. Originally, the proposed district had to be one contiguous district. The proposed district, including the recent 2 expansions, is not one contiguous district. Why? Why is that OK now when it was not earlier this year?

4. To preserve architectural history on the Hill, what evaluation was done regarding self-registering of homeowners to the National Historic Registry? If this was not pursued, why not? If it was investigated, why was it dismissed in favor of a local, broad district?

5. The issues facing Munjoy Hill are zoning topics (height, depth, density, setbacks, demolition.) Why is a possible Historic District being proposed to address zoning matters?

6. The 2017 Conservation Overlay, as enacted, has many unintended negative consequences. Why is the City not evaluating it and taking action on improving zoning versus adding another set of regulations on home owners?

7. In Mayor Strimling's exit remarks, he highlighted the growing gap between rich and poor. A 12th Historic District will create another affluent neighborhood that will further increase this gap.

8. If the 12th HD passes, pressure will be added to off peninsula neighborhoods. This will cause undue pressures on other areas of the city. It will also send a message that any other NIMBY group can stop growth in our city.

I look forward to the workshop on the 10th to hear answers to these key questions. In the end, I hope the Planning Board will not recommend adding a 12th Historic District on Munjoy Hill to the City Council.

Thank you,

Carle Henry

Google Groups

Munjoy Hill Historic District

Carol Connor <balsamique@live.com> Dec 3, 2019 9:11 AM
Posted in group: **Planning Board**

December 3, 2019

To: Chair and Members of the Planning Board,

As a long time Munjoy Hill resident and property owner I appreciate the uniqueness of this special neighborhood, and view it as a treasure for residents, visitors and all who frequent it.
This area is a much-loved part of our city, a focal point for many who have fond memories of Munjoy Hill and others who are creating new memories here. In recognition of the value of this neighborhood, I wholeheartedly support establishing a historic district on Munjoy Hill. I applaud the recent unanimous vote of the Historic Preservation Board to recommend moving forward with the designation of a Munjoy Hill Historic District. In addition I support the landmark designation of the individually recommended buildings and the 100 foot boundary that accompanies the proposal.

My home at 12 Montreal Street is one of the individual buildings recommended for landmark status. The house, built in 1855 by James B. Newell, is an example of a working class family home like many others that populate Munjoy Hill. These modest homes deserve to be protected and preserved. Sadly some early, simple structures have been demolished, as they continue to be easy-pickings for developers who have a vision based on economic gain at a loss for the residents of Munjoy Hill.

The architecture that makes our neighborhood such a special place is not the recent collection of lifeless boxes that fill their lots, loom over nearby houses and bump out to the sidewalk. It is the rich collection of apartment houses, homes, shops, green spaces and public parks that serve as a living record of our culture and history. Let's not lose any more.

Establishing an historic district is an acknowledgement that the City of Portland is a steward of its cultural assets and is willing to protect them for us and for future generations. I respectfully request that the Planning Board vote to accept the proposal put forth by the Historic Preservation Board to designate a Munjoy Hill Historic District including individually recommended landmark structures.
It is the responsible thing to do.

From: Carol M. Connor
12 Montreal St.
Portland, Maine 04101
207 232 2265
balsamique@live.com

Sent from my iPad

Google Groups

Munjoy Hill Historical Designation

Joshua Baston <joshua.baston@gmail.com> Dec 3, 2019 8:27 AM
Posted in group: **Planning Board**

Members of the Portland Planning Board,

I am writing to you to express my concerns with the proposal to designate certain portions of Munjoy Hill as a historical district. I have been a resident on the hill since 2009 and in 2011 I purchased a dilapidated two-unit building which required extensive rehabilitation. I performed much of the renovation myself and I now live in one half and rent out the other half as a long term rental. In my professional life I'm a licenced master electrician who works for a company installing solar energy systems, so as part of my own home renovation I included both a solar hot water and a solar electric system. This was both for the environmental reason of reducing my carbon impact but also for the economic reason of reducing my monthly utility expenses. I pay for hot water in the rental unit and so that is now thankfully covered by Maine's abundant free sunshine. I pay for heat and so I installed an efficient natural gas heating system, however had the technology been available at the time I would have installed air source heat pumps. In the past 3-5 years air source heat pumps are being rapidly adopted by Mainers who want to decrease their heating cost and reduce their reliance on imported fossil fuels. I mention all of this because both solar energy systems and the outdoor compressor units associated with air source heat pumps would require permitting and review by the historical preservation board if Munjoy Hill becomes a historical district. The Munjoy Hill homeowner may want to maximize the solar potential of their roof by filling it with solar but they would need to go through the subjective review of the HPB who could dictate where and how many panels could be installed to match the board's aesthetic preferences. The homeowner may also want to locate the outdoor unit for their heat pump in the most efficient location where is would not get buried by snow, but the HPB may dictate that it be installed out of sight or even not at all. These are just a couple examples of the many limitations that would get placed on a homeowner looking to improve and increase the efficiency of their Munjoy Hill home.

I appreciate the history of Portland and agree that we have some incredible historical character which is quite important to maintain, but we need to look at using other tools which will not have so many potential consequences to homeowners. Everyone who purchased their homes on Munjoy Hill purchased them in a non-historical designated district and a historical designation would have certainly influenced my buying decision in 2011. If this proposal passes, I also wonder: what will be the next proposed district? There are lots of beautiful old homes in Oakdale, East Deering, and Rosemont. Should everything old in Portland be saved in perpetuity instead of crafting zoning which balances responsible growth with neighborhood character? Historical designation may preserve a certain "look" but this is not in most homeowners interests and it certainly does not help the city build more workforce housing or move towards their self imposed and ambitious carbon reduction goals. Piecemeal historical designation also opens the door for NIMBYism in development, which undoubtedly has had some impact on the jagged shape of the proposed Munjoy Hill district. I believe that a neighborhood is created by not just the architecture or age of its buildings, but also the diversity of the people who are able to live there. Munjoy Hill has changed significantly over the past decades, however a historical designation is not going to stop that change or bring something back. It's only going to ensure that this is a neighborhood with old buildings that are now even more expensive to maintain and will thus decrease the diversity of folks who can afford to live here.

I appreciate your consideration,

- Josh Baston

Google Groups

Hearing on Munjoy Hill Historic District

njordan@long-island.lib.me.us <njordan@long-island.lib.me.us> Dec 4, 2019 2:56 PM
Posted in group: **Planning Board**

Hello,
My husband and I own 6 buildings on Munjoy Hill, 5 of which are in the proposed historic district. They all provide affordable residential rental units.

We support the proposed district. Munjoy Hill is changing too fast, not for the good. Preserving the historic character will go a long way toward keeping Portland a 'people oriented' city.

Thank you,
Nancy Jordan
Bob Jordan

Google Groups

in strong favor of the proposed Munjoy Hill Historic District

carolyn swartz <carolynswartz@gmail.com> Dec 4, 2019 12:21 PM
Posted in group: **Planning Board**

Members of the Portland Planning Board:

My husband and live at 27 Merrill Street on Munjoy Hill. While Merrill Street is not included in the current proposed Historic District (three massive, out of character new builds) I would like express full support for the plan as it stands.

The reasons are far more complex than a YIMBY/NIMBY disagreement. Neighbors who favor the District recognize the need for Portland to create more middle income/affordable housing. But to date no new development on the Hill has even attempted this. In fact, over the past five years, the Hill has lost a considerable number of affordable housing units
to new luxury development.

I also find the trade off between creating visual blight, i.e. lifting restrictions in height and massing as a "trade off" for creating one affordable unit a misguided incentive rife with potential for abuse. Surely, there are better ways to incentivize affordable housing than to allow out of scale/proportion/character builds.

With a few exceptions, the new development on the Hill make no attempt to fit reflect or even give a nod to the character of the neighborhood. Our house look out at 30 Lofts (30 Merrill), with a garish glass Halogen-lit front and foyer that, at night, looks like an emergency room entrance.

Once a neighborhood is wrecked - and it doesn't take many buildings like 5 Merrill (known as the Zumwalt and The Golem) and 30 Lofts to do it - there's no coming back. I have heard tourists at local restaurants wondering what is happening - why ugly, out of place new buildings have "cropped up" since their last visit some years ago.

There are parts of the city - with better access to transportation, more space for parking - where new builds makes sense. For me NIMBY is not about people or level of income. It's about the wanton and to date unchecked disregard of developers to do whatever they want in a neighborhood worth preserving.

I wholeheartedly support the Munjoy Hill Historic District - and urge you to as well.

Sincerely,

Carolyn Swartz

Carolyn Swartz | Writer/Director | 917.714.5743 | view my films here

Google Groups

YIMBY Letter to Planning Board RE: Munjoy Hill Historic District

Yimby ME <yimbyportland@gmail.com>
Dec 4, 2019 4:31 PM
Posted in group: **Planning Board**

Portland Planning Board Dundon,

Please find our attached letter regarding the proposed historic districting of Munjoy Hill. YIMBYPortland is very concerned that the proposed district will compound the current housing crisis on Portland and increase costs and hardships to property owners and renters.

We appreciate your service to the City.

YIMBYPORTLANDME.com

YIMBY
PORTLAND, MAINE

YIMBY Portland is writing this letter to offer some different perspectives on the consideration of implementing a Historic District on Munjoy Hill prior to the Planning Board making a recommendation to the City Council. This is a permanent and very consequential decision that will impact residents for generations to follow.

Our city is rich in history and YIMBY Portland enjoy and celebrate this aspect of our great city. As strong supporters of historic preservation, we applaud the over eighty National Historic sites we have in place.

Over the last ten years, the pace of change and investment happening on Munjoy Hill is quite different and more significant than any current residents have experienced. As a result, there has been concern from residents and a subsequent series of responses from the city: first a moratorium, followed by the Conservation District Overlay, and now the Historic District. At this stage, it is important for the city to carefully consider the effects of a Historic District on the neighborhood and the implications for the city's broader housing, related mobility and climate change goals.

It is clear from Portland's 2019 Housing Report that the City is suffering from a housing shortage. This lack of housing is stifling population growth, displacing long-time residents, and inhibiting businesses from finding workers. Some key data points from the Report highlight the lack of affordability of housing in Portland:

- The City's Comprehensive Plan Goal is for 75% of employees in Portland to be able to live in Portland.
- Per MaineHousing, to purchase the median priced home in Portland of $316,000, a household would need an income of $102,173, which is almost double the actual Portland median income of $51,799.
- 20% of the population are low-income households. Of note, 56% of Portland households are renter occupied (earning less than $35,000 per year) while 44% are owner occupied
- Adding to this situation is the fact that 54% of Portland's housing stock was built pre-1950, which is the riskiest housing for lead hazards & are more expensive to maintain and heat
- HUD estimates that to achieve a balanced market of demand and supply within Portland/SoPO markets requires 7,200 new housing units by 2021 (5,525 units of ownership and 1,675 rental units)
- Population on Munjoy Hill is at the lowest point in more than 80 years despite having more housing units

While the City Council has cited the housing crisis as their top priority, increasing housing supply and affordability is a complex and challenging endeavour. Prior measures have produced limited results. Inclusionary Zoning yielded a total of 6 units in the past 4 years and increases the cost of unsubsidized housing. Work on the Re-Code represents the city's greatest potential to enable more housing, but the current process is slow and may take ten years before the new zoning is adopted.

Considering that recent efforts to promote housing have had a negligible effect, we should be very cautious of any policy that could negatively affect the production of housing. We encourage the city to fully explore the effects of the Historic District on housing values, rents, maintenance, and sales and how these would impact our current housing crisis before considering such a policy. To date, we are not aware of any serious analysis that has taken place.

While the trade-off can make sense for certain neighborhoods, Historic Districts increase the costs of making improvements to properties. The process, regulatory complexity, and increased costs, can inhibit residents from being able to afford repairs, additions, and other improvements. Historic Districts can also make it harder and more costly to develop new housing, through more restrictive and subjective contextual rules. Such obstacles do not increase the availability of 'missing middle' affordable housing. The good news is that many homes on Munjoy Hill have been in place for 100+ years and most are now in very good condition.

Since 2013 twenty-one houses have been demolished, three since the Moratorium was put into place, which translates to 200+ years for the replacement of houses on Munjoy Hill. This rate of change is not excessive and suggests proper management by the Planning Board.

Additionally, many of the implemented zoning changes included in the Conservation District Overlay do not align with stated City goals. Many provisions seem to accomplish the opposite of stated concerns in regards to new construction such as improving the quality and diversity of design, maintaining the neighborhoods' current build pattern and encouraging more sustainable, green building.

For those supportive of the Historic District on the Hill, we understand change can be disruptive. However, there are ways to manage change while still allowing for the city to increase the supply of a diverse range of affordable housing options. We look forward to the City accelerating the work of ReCode and exploring other creative policies to address our city's housing needs to strengthen existing neighborhood.

We reiterate that we strongly support historic preservation and acknowledge that it has and can serve a very important role in Portland. However, at this time, a 12th District spanning across most of Munjoy Hill would be a vote against housing affordability, housing choice, increased diversity, a stronger economy, a less auto dependent city, fighting climate change and developing a vibrant workforce that lives where it works.

We believe historic preservation is strongest when it is used appropriately and as intended. Historic Districts have been used in other communities to limit development.

At the 2011 Fitch Forum, then Landmarks Commissioner of New York City, Margery Perlmutter said, "I have seen how community activists use historic preservation as a way to limit development. That's not what historic preservation is for, that's called zoning. What I'm seeing more and more, which I think is a very unfortunate trend in sort of the historic preservation movement...is that people will see that designating a Historic District or designating a building can actually be a speedier way to eliminating a development possibility than convincing the City Planning Commission that it would be a wise planning move."

Thank you for your consideration.

YIMBYPortlandME

For those unfamiliar with us, our mission is to support people, policies, and initiatives that promote economic and social prosperity for all residents of the City of Portland. With our current housing crisis, we feel obligated to publicly discuss this topic in a manner aligned with our purpose.

Google Groups

Support for enacting (and expanding) Munjoy Hill Historic District

EJ Koch <ejkoch@gmail.com> Dec 5, 2019 12:45 PM
Posted in group: **Planning and Urban Development**

This is my letter of support for the proposed, and an expanded, Historic District on Munjoy Hill.

Because the materials are lengthy, I have included a cover summary.
One of my primary points is that there is widespread support for this Historic District, also among those who do not sign Petitions.

Please take these as part of the record concerning the referral of the Historic District proposal to the Planning Board, and again register my (and hundreds of others') support for a Munjoy Hill Historic District.

Erna Koch
617-818-0882



ERNA KOCH
81 Vesper St., Portland, Maine 04101
Phone: 617-818-0882
E-Mail: *EJKoch@gmail.com*

December 5, 2019

City of Portland Planning Board, staff, and City Council members

This is a cover summary of the materials attached. I hope you will read my letter, but I recognize that your time is valuable and limited. Therefore I have attached this summary of what is covered in the materials attached.

Please Adopt and significantly expand the proposed Munjoy Hill Historic District

- After a great deal of community effort, with no discernable impact, adopting a Historic District on Munjoy Hill appears the best/only way to protect the Hill's character and livability. It seems that the City has allowed developers to control development on the Hill through lobbying and private agreements. This is anathema to an open process.

- **Broad Local and popular sentiment runs overwhelmingly in support of preservation** over demolition, and against predatory development that produces incompatible new developments and massive scale. The Appendix A opinions, directly from Hill residents and others are reflected by hundreds of people on Social Media over a term of years. [SEE: Appendix A, for a broad sampling of actual local comments about inappropriate development on the Hill] See also, recent local press coverage of the Historic District proposal, and in particular the "Comments" section.

- An "Opposition Petition" to the Historic District presented to the City in October 2019 was representative of just 12 properties, one of which has already been demolished and redeveloped, and one of which was demolished in November for development, pending review of yet another controversial, oversized building plan.

- New building is supposed to comply with Design Standards, which provide in relevant part that the style, scale and massing of new buildings be compatible with the rest of the local streetscape. The Planning Board appears to be paying no attention to these standards, and approves inappropriate proposed building just about every time. I'm not aware of any time the Board has turned down a plan – they accept "revisions" of inappropriate plans regularly, failing the community every time. Staff appears to be captured by the developers.

- New Planning Board-approved buildings are usually oversized, overpriced eyesores crammed onto small lots that tower over their neighbors and contribute nothing good to the streetscape or the local community. They do *not* add to Portland's housing stock in any way that is meaningful to residents. A good proportion of the condos are bought by people who don't live in Portland more than 3-4 months a year. And none appear to be anywhere near in reach price-wise.

- The minor effort by the City in response to sustained and vigorous resistance of residents has not been effective to preserve the Hill's valuable assets. We need a Historic District to accomplish that. [SEE: pictures pp 6-11 of letter]

For more detail about my strong support for a broad Historic District on Munjoy Hill, see my full letter. Thank you for your consideration.

Erna Koch



ERNA KOCH

81 Vesper St., Portland, Maine 04101
Phone: 617-818-0882
E-Mail: *EJKoch@gmail.com*

December 5, 2019

City of Portland Planning Board, and City Council members

Hello,

My name is Erna Koch. I am 40 year resident, and a 35 year property owner of a three family house on Munjoy Hill, in an area that falls within the currently proposed Historic District.

This is a long letter which enumerates developments that have informed my conclusion that enacting a Historic District is the only reasonable path to preserve the Munjoy Hill streetscape. I have included extended community commentary in the Appendix, to allow readers to get a sense of what actual local discussion on this issue looks like.

Please Adopt and expand the Munjoy Hill Historic District
I support and encourage expansion of the Munjoy Hill Historic District for all the reasons you've heard from others, and as I've written in the past. As both the zoning ordinance, design standards, and the Comprehensive Plan require, new buildings "should be" compatible in scale, massing and design to the neighborhood. Munjoy Hill has a Historic story – much of it as housing for the many working class families who worked in Portland's industries. This should not be destroyed by developers' building to the "limits of the envelope" as they have heretofore been allowed. This kind of development is not desirable for anyone but developers looking to maximize square feet they can cram in, and thus higher profit. THIS is one important reason why the buildings they erect end up looking like big boxes.

Another reason to support the adoption and expansion of a Historic District for the Hill is the culture our human scaled streetscape has encouraged and sustained for over a hundred years. Although many of the original families from my neighborhood have moved, and their triple decker buildings have been converted to condos, at least those condos remain part of the

neighborhood streetscape. We retain a sense of community, walking neighborhoods, and a strong feeling of connection to each other and to the working families that have lived here so many years.

While the Hill has traditionally been a place where working people have lived and raised families, its character is rapidly being compromised by speculative development of "big box" type condo housing. The housing thus added is far out of the financial reach of most Maine residents. It is opposed by most property owners and residents of Munjoy Hill for this reason, *and* because it is not compatible or consistent with the type, design, and scale of housing here.

The new big box buildings contribute nothing, and in fact stick out like oversized monoliths, many of them not even having front doors to the street. Many of the new residents come from places where this type of building is common, car-centric. So far, we have seen little participation or connection by the new residents to the ethos of the local community here. I am not faulting them personally – they are moving here from other communities that often have the appearance of the new condos they've chosen. It is important to note that architecture and streetscape strongly suggest what kind of community exists, but many of the new buildings point to the normalized isolation many of us feel in bigger cities. It's what many of the new residents are more familiar with. Ironically, our area's character, appearance, and culture is part of what attracts new residents and visitors to Portland. As we allow changes that do not fit, we become "every city" USA.

This kind of development has been supported to date by the planning board, through the use of variances and other techniques, while cynically calling it "adding to housing stock." In the past, Hill residents have supported reasonable regulation standards that would curtail predatory development. But, developer practices endorsed by the Planning Board have already changed the face of the hill, and we have learned that the considerable effort to add clearer standards has had little effect on Planning Board deliberations and actions. If action is not taken now to create a Historic District, incompatible development will continue to overtake this part of the city that we (and the many visitors to Portland) love. And, I want to live in a community I can still recognize.

This is as **Portland's Comprehensive Plan** emphasizes:
* The need to stabilize and enhance historic areas of the to ensure quality investment in existing structures and ***compatible*** **infill development**;
* That we encourage additional ***contextually appropriate housing*** density in and proximate to neighborhood centers…. as a means of supporting complete neighborhoods;
* That we ***promote historic preservation*** as a key economic, sustainability, and community development strategy.

The planning board is failing miserably to hold developers to any actual compatible design/scale/massing standard or code provision [SEE: Appendix B], even after an Ordinance change for which many fought long and hard. We don't have a couple years to "***be in a better place to look at the results and what is happening and [we will] be in a better place to take stock and see how it worked out.[1]"*** We don't have more time. Given our experience with a clear ordinance revision including standards which produced no change on the ground, we already know how it's been working out.

[1] Christine Grimaldi, PPH, talking about the Historic District designation, 2019

Not as intended.

A Historic District will provide CLEAR guideposts to residents and developers. We need it. Nothing else has worked.

There is a Petition that has been circulated in opposition to the Historic District. It is not unreasonable to believe it represents less than 2% of property owners on the Hill.

Looking up the 25 signatures on the "opposition" petition, there are some notable factors.

- The signatures represent owners of 12 properties (with 33/37 Montreal which is currently slated for development and in process, counted as one).
- Three or four of the 12 properties are older, modest single or multifamily dwellings, which could be attractive targets for teardown and "development."
- Two of those properties that could be development "targets" are directly across the street from the proposed development at 33/37 Montreal St.
- One signatory appears to be a renter at one of the 12 properties, and one is a property manager who is not an owner.
- One signatory listed an address that can't be found in the City Assessor's database, and his name is nowhere listed as an owner on that street.

What are the opinions of those who live on the Hill who have not signed any petitions?
It is worth considering the opinions of a swath of Munjoy Hill and city residents. Many of us have made our position clear at City Hall and information meetings. However, there are others who have not signed petitions, and don't approach City Hall. These are people who are working hard, pursuing their lives, who feel cut off from "politics." However, that doesn't mean opinions aren't expressed. When a teardown happens, or when a development is proposed or built, there is usually active commentary on social media and in the community, dating back to well before 2016.

An example: 5 Merrill St. This is now a two family condo building, with 6 bedrooms and 6 bathrooms, which looms over its neighbors and is thought by many to be the ugliest building on the Hill. Many say it "gives the neighborhood a black eye." It's a typical example of "building to the limits of the envelope." (See before and after pictures below).

From the upper floors, it has "sweeping views", which is what they're selling. That and the "charming neighborhood." One wonders, how long will it remain "charming?" An apartment in this building was listed for $1,500,000.

From Face book group: "Munjoy Hill Residents (Past & Present)"

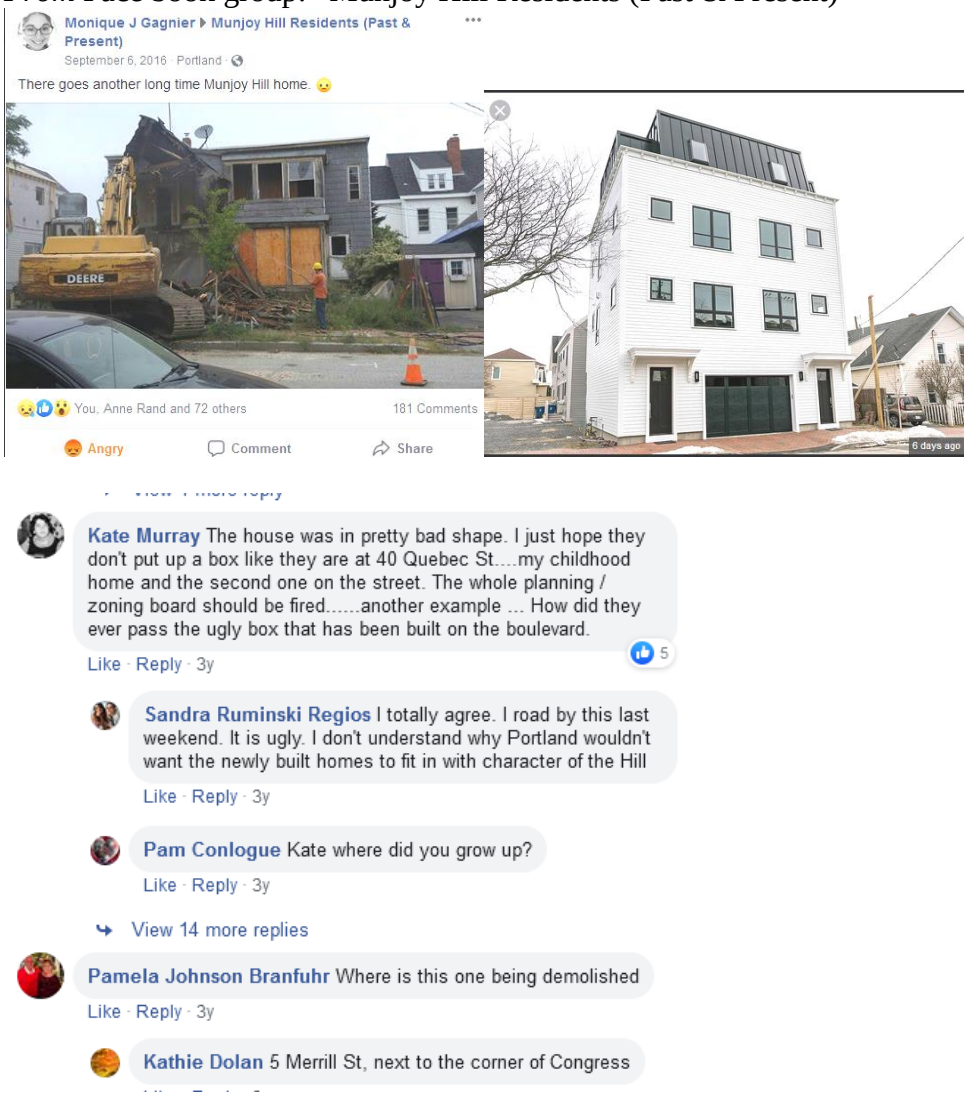

For more of the hundreds of comments this and other Face book posts have generated, See Appendix A.

Note the difference in scale and design between what became "new 5 Merrill" and "old 5 Merrill," *and* the 181 comments on Facebook in 2016.

Words that appear most frequently related to the teardowns and/or new developments are "sad," "ugly," box,"ugly condo," and "eyesore." There are a couple references to Union Station, and at least two comments in that thread asking ***"Doesn't Portland have design ordinances so neighborhoods will retain their character?"*** and ***"I don't understand why Portland wouldn't want the newly built homes to fit in with the character of the Hill."***

As someone who is passionate and involved, I speak about development with other property owners and residents daily. Many of my closest neighbors live in condos – they are from other parts of the country and bought a condo in an updated three unit because they love the Hill's character, their own restored or updated building, and the area. Sentiment among residents I speak with, long term and newer, runs overwhelmingly towards protection from massive and inconsistent design, as do the Facebook posts.

The point I'm making here is that despite the fact that many Portland residents don't speak up – people are busy with their lives, or intimidated, or don't know who to talk to/don't think "fighting city hall" is productive – if one looks, it is easy to see that a large majority strongly disapprove of the rampant teardowns and oversized overdevelopment on the Hill. Also on this Facebook site, are several references to Union Station. We cannot be allowed to destroy ourselves to please developers.

The above comments were from 2016, when the Merrill St. building was torn down. In that case, the building had gone without maintenance for too long, and was unsafe. Yet, people were still concerned about what would replace it. And they were right to be.

Indeed, can it be understood *"why Portland wouldn't want the newly built homes to fit in with the character of the hill?"*

The negative consequences of the R-6 zoning, meant to allow/promote infill development for more housing became clear quickly.

From a *Portland Press Herald* article in 2019:

"Residents and policymakers are reacting to development patterns that emerged after the City Council made changes to the R-6 zone. Those changes opened up smaller lots for development.

Since then, large boxy condominiums have popped up next to more traditional-style homes and apartments. In some cases they are built to the property lines, reducing the amount of sun and light between buildings and making the streets less welcoming, residents said.
[See, 47 Monument St., p. 7]

"Those Soviet structures are popping up like Japanese knotweed," Morning Street resident John Wuesthoff said."

Moratorium and 9 Moody St development: Following many months of advocacy by Hill neighborhood residents and property owners, a 6 month moratorium was enacted on teardowns. Note that the last one on the permit list (next page) is 9 Moody St., in my neighborhood. Jim Brady had a teardown permit, and I believe he demolished the building at 9 Moody St the day before the moratorium went into effect.

I met Brady the night before his teardown, and he told me the 9 Moody St. building was "unsalvageable" and that he intended to construct something very much like the then-existing building for him and his family to live in. It was not in fact unsalvageable, and you can judge for yourselves whether it is similar in style and scale to the building that was demolished.

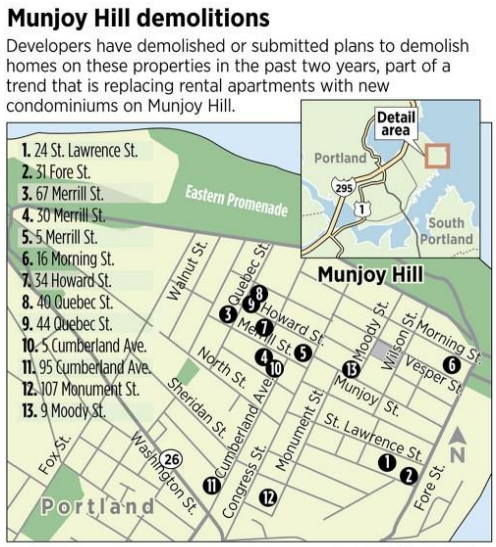



9 Moody before:



9 Moody after:





There have been many other demolitions and “redevelopment.” Some buyers have chosen to restore or build in a compatible fashion. However, many have not.

A tiny single family on a small lot was “redeveloped” and now is massive and interferes with houses on both sides of it.

47 Monument before: After




The 47 Monument building was close to neighbors before, but still allowed the neighbor to its left to “breathe” and have access to light.

Then (Small grey house to right) Now




25 Monument Before: Now:




“Units” in this 25 Monument development are on the market for upwards of $1.25 million. Also selling “sweeping views,” after impeding views and of its neighbors.

30 Merrill St.
before:



30 Merrill St.

2 Existing Rental Units Replaced with 7 Luxury Condos and Incompatible Scale to Surrounding Buildings



BEFORE



AFTER

Karen Snyder photos

33 Lafayette St.

An Old Church and Mature Street Tree Replaced with Incompatible Architecture To Surrounding Buildings



BEFORE

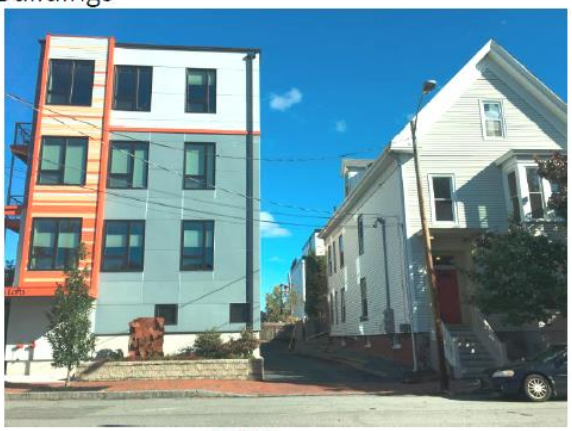

AFTER

Karen Snyder photos

34 Howard St. (Again, as with most of these, built to the "limits of the envelope")

A Traditional Single Family replaced with a Contemporary Single Family



BEFORE- Single Family



AFTER-Single Family

Fore St.

3 Existing Rental Units and Mature Street Tree (on left) Replaced with the Scale and Mass of 4 Luxury Condos with No Front Door



BEFORE



AFTER

And coming up:

Montreal and Morning Street proposed developments:

From Portland Press Herald, September 2019
[Developer] Wells' project is said to be the only proposal that has gone in front of the preservation board since the overlay was enacted, said Christine Grimaldi, acting planning and urban development director. ***With so little engagement in the process, it is hard to say how well it is working or if it should be tweaked, she said.***♦

"I feel confident about it, ***but I feel like in a couple years we will be in a better place to look at the results and what is happening and we will be in a better place to take stock and see how it worked out," she said.***

♦ It is not clear what she's referring to here. There has been a great deal of community "engagement."

I think we can see how it's working out. We don't need *more* years more of this and further destruction of usable/restorable compatible housing for expensive condos with "sweeping views."

The 33/37 Montreal project is a plan to remove a salvageable, compatible two/three family house on a corner in a neighborhood of small single and two family residences, and tear down two other houses, in order to combine 2-3 lots and build a massive out of scale "modern" condo building in their place on the combined lots. As of December 5, these buildings have been torn down, and there is as of yet no PUBLIC approved plan for the project. As proposed in both the first and second iterations, the builder wants to, as most do, build to the "envelope" of permissible area, since scale, massing, and design do not appear to be considered as obstacles by the planning board, even though Portland's Design Standards require it [See Appendix B].



Game plan? It appears the developers' game is to propose something so out of scale and objectionable that provokes community outcry, and cannot be approved. Then, to return with something that is presented by the builders as "significantly revised," even though it does not comply with the code either. By that time, developers are crying that the process is a hardship on them, the community is exhausted, and it often appears the Board is less inclined to reject the "revised" design because of all the "effort" the developer has made to "comply" with the standards.

There is a similar game afoot for infill building in an empty lot at 130 Morning Street. While several of the surrounding buildings are large (they are a redeveloped school and were apartment workforce housing), the proposed design extends again right up to the "envelope"

of permissible lot lines. The architects confirmed to me that their instructions were to design the build to the boundary of the "envelope" to maximize interior square footage. It did not appear that anyone in the design process considered compatibility with existing structures.



133 Morning St



129 Morning St



119 Morning St



130 Morning

Karen Snyder photos

I will end with this sentiment by Karen Snyder: "When the hot market of Munjoy hill is over, real estate agents and developers will survive and will move on to the next market leaving behind junk 'new' ugly buildings where once stood a neighborhood of historic charm. This IS the reality of what is happening and why I hope Munjoy hill is considered as a historic district."

A Historic District will provide CLEAR guideposts to residents and developers. We need it. Nothing else has worked.

I agree with Karen - we have tried everything to bring attention to the conflict of the design, size and character of these new developments with the existing streetscape and neighborhood. My fear is that if this progresses further, developers proposing new oversized and incompatible developments will begin to point to other "box structures" nearby to leverage their requests to build more of the same.

As has been done in the West end, a Historic District on the East End will bring us to a place where reasonable renovation and building can continue to be implemented, and not inflict further damage on our distinctive neighborhoods.

Thank you for your consideration.

/S/

Erna Koch

APPENDIX A:
Public Comment from Social Media
[this is a sample only]

Many Hill residents and property owners have made our position supporting an (expanded) Historic District clear. However, there are many who have not signed petitions, and are unable, or don't know how to approach City Hall as advocates.

When a development is proposed or built, there is usually active commentary on social media, dating back to at least 2016. A posting about 5 Merrill Street in 2016 generated 181 comments.



(See Appendix pages 2-6, for sampling of comments on this post, 2016-present)

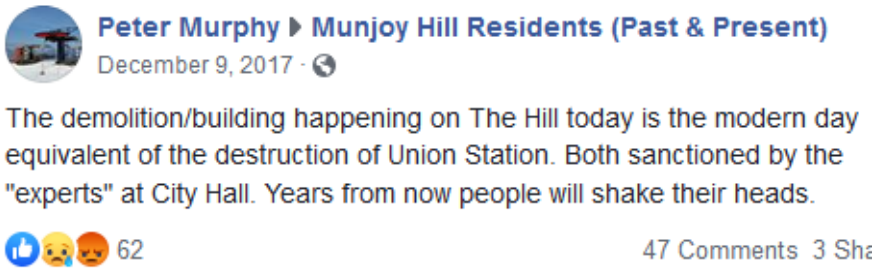

Comments concerning the 5 Merrill Street teardown (Facebook, 2016; “Munjoy Hill Residents (Past & Present)”:

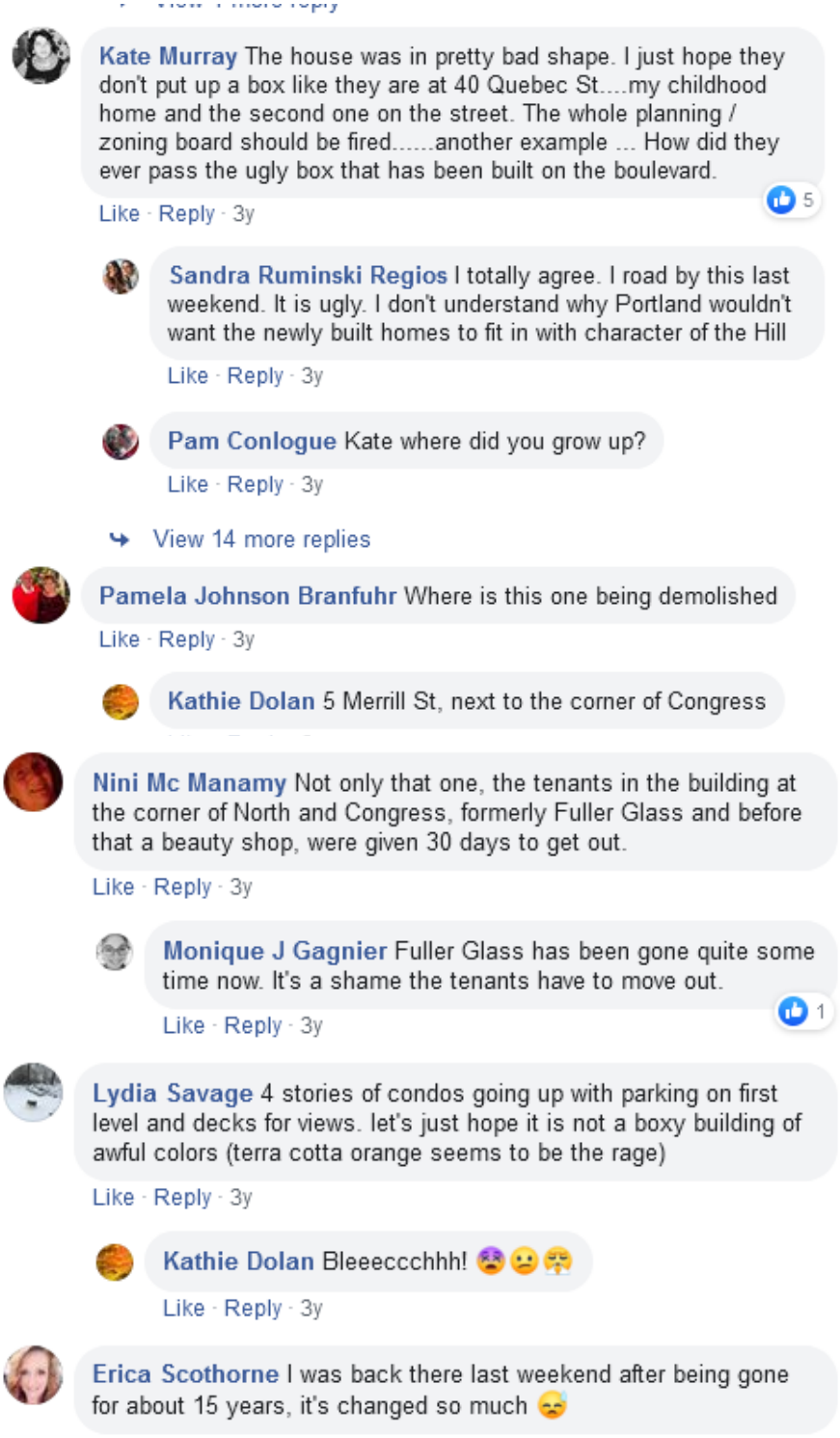

Kate Murray The house was in pretty bad shape. I just hope they don't put up a box like they are at 40 Quebec St....my childhood home and the second one on the street. The whole planning / zoning board should be fired.....another example ... How did they ever pass the ugly box that has been built on the boulevard.

Like · Reply · 3y · 5

Sandra Ruminski Regios I totally agree. I road by this last weekend. It is ugly. I don't understand why Portland wouldn't want the newly built homes to fit in with character of the Hill

Like · Reply · 3y

Pam Conlogue Kate where did you grow up?

Like · Reply · 3y

View 14 more replies

Pamela Johnson Branfuhr Where is this one being demolished

Like · Reply · 3y

Kathie Dolan 5 Merrill St, next to the corner of Congress

Nini Mc Manamy Not only that one, the tenants in the building at the corner of North and Congress, formerly Fuller Glass and before that a beauty shop, were given 30 days to get out.

Like · Reply · 3y

Monique J Gagnier Fuller Glass has been gone quite some time now. It's a shame the tenants have to move out.

Like · Reply · 3y · 1

Lydia Savage 4 stories of condos going up with parking on first level and decks for views. let's just hope it is not a boxy building of awful colors (terra cotta orange seems to be the rage)

Like · Reply · 3y

Kathie Dolan Bleeeccchhh! 😵😐😤

Like · Reply · 3y

Erica Scothorne I was back there last weekend after being gone for about 15 years, it's changed so much 😅

Michele Latham Saw this the other day and was very surprised. I knew they were renovating but tearing down? What's going in there? another ugly looking 4 story condo no doubt.

Like · Reply · 3y · 3

Betty Calderwood-Martin Had to come down. It wasn't healthy and was too far gone for renovation. It's SUPPOSED to fit the neighborhood. I heard it will be a two unit condo.

Like · Reply · 3y

Kathie Dolan Condos suck, especially when they look like the ones where Nite Owl was!

Like · Reply · 3y · 1

Carol Lambert Sad

Like · Reply · 3y · 1

Ashley Webster I drive by yesterday, it looked like it was touching the other house behind it. I couldnt bring myself to take a picture though

Like · Reply · 3y

Betty Calderwood-Martin It was only about 3 inches from the house in back on one side.

Like · Reply · 3y

Ashley Webster You can see the shape of your old. House I the back of the other one.

Like · Reply · 3y

Chris Coose There is more retrofitting going on on the Hill than there is tear down. The replacement buildings just plain suck in relationship to the surrounding neighborhood.

Like · Reply · 1y · 1

Enoch Bradford Wenstrom do yu people live around the corner from this building like I do? it is a really classic nice looking place. it is a shame it is being destroyed vs rennovated

Like · Reply · 1y · 1

Heather Ashby Actually quite the contrary. I own lots of property in Portland and have never overhauled one. Always brought it up to its prior glory. Never have we torn one down. We also own a very iconic and historic building downtown that we are restoring and we a... See More

Like · Reply · 1y



Beatrice A. Brush What the hell is the matter with these people? You bought a building on Munjoy Hill. Why do you feel the need to change the way it looked? You liked it enough to buy it, RIGHT? Then leave it the hell alone. These buildings have charector, good bones, HISTORY.....and you asshats come in and change it to "modernize" the Hill. Well the Hill was fine without you. Please stop tearing down History. I pray for you all.

2

Like · Reply · 1y



Heather Ashby These buildings might not be up to today's code, and life safety standards, or economically built to reduce energy consumption, old drafty windows, expired heating systems, difficult and expensive to maintain or rent... whomever sold it has a right to do so, and the new owner has a right to do with it what they want. People complain about it, but don't maintain their buildings and they are run down and cost so much to repair that the new owners would rather start anew. Rundown buildings draw rundown tenants who don't care about the property. Just my 2 cents and I know that everyone opposes that opinion it seems, but I like new. That's MY taste, not for ya'll I guess.

1

Like · Reply · 1y

Hide 13 Replies



Enoch Bradford Wenstrom obviously said by a person who has no regard for any historic value of architecture. no one is saying renovation is not needed.

Like · Reply · 1y



Enoch Bradford Wenstrom people tearing down these buildings are trying to make the hill like the place they escaped from back home..

1



Chris Coose Coming very soon, the demolition of 25 Monument for another box of condos. It was once a school and it is structurally sound. The long time African American owners got over a million dollars for it. Charlie's house across the street from 25 Monument go... See More

Like · Reply · 1y · Edited

2



Mary Brennan I agree. I was so sorry to see Union Station destroyed for a discount store that failed miserably. I think it was Arlans, are something like that. Complete junk!

Like · Reply · 1y



Cynthia Ann Wildes Smith I agree, and the distruction of LongFellow house on Fore Street that he was born in leading to the Prom . That was torn down as well. So we could house all that ugly business 's that took its place. Yes we had residents down there as well.

Like · Reply · 1y

1



John Bennett I'm already shaking my head I disbelief couldn't wait til years from now.

Like · Reply · 1y



Eddie Fowler Brutal architecture describes it to a T...

Like · Reply · 1y

1



Peggy Harrington Wilson It's a disgrace! Tearing down all those homes of people and families that have lived there with memories that are now gone. So sad😔

Like · Reply · 1y



Timothy M. Smith As a life long resident of the hill still living here today.im disappointed in the councilor that represents munjoy hill,why did you wait so long to want a temporary ban on teardown and build.you are the reason we need more true residents to hold your office.



Anne Mazur Pappalardo Portland's disappearing history is heartbreaking. My 18 and 25-year-old sons are even lamenting what is going on. Incredible lack of value and historic pride.

Like · Reply · 1y



Solange Kellermann We're shaking our heads now.

Like · Reply · 1y



Kate Tylor It's really sucked to hear the mayor on TV talking about high income places in the city like Munjoy Hill. My heart sank.

Like · Reply · 1y



Kathie Dolan I don't think I care much for that mayor or his politics!

Like · Reply · 1y



Bob Taylor anywhere they can find a dollar.....

Like · Reply · 1y



Carol Connolly So true! So sad!

Like · Reply · 1y



Timothy Trott It's not like it used to be like we grew up the yuppie are taking over not the working class people were used to

Like · Reply · 1y

Nini Mc Manamy ▸ **Munjoy Hill Residents (Past & Present)**
October 6, 2016 ·

30 Merrill St scheduled for demolition to make way for condos. This historic house was built in 1840.

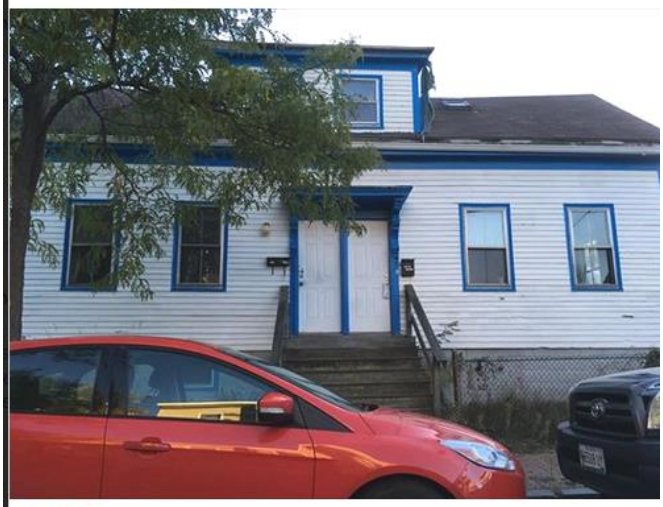

65 59 Comments

Rebecca Milliken Sad.
Like · Reply · 3y

Robin M. Plante I hate what the hill has become.
Like · Reply · 3y

Theresa McGeehan WHAT THE HELL IS GOING ON
Like · Reply · 3y

Doreen Lund Burnett Is that little house that sat back from the street with the fence around it still there?It was just past 17 Merrill Street.
Like · Reply · 3y

Donna Stults 😞 so sad
Like · Reply · 3y

Mary Anderson Emmons Why don't they just demolish the whole friggin hill! They are ripping it apart piece by piece anyway! This is so sad what they are doing
3
Like · Reply · 3y

Joanne Devine Why doesn't landmarks protect this place?
3
Like · Reply · 3y

WM Jel Where is the historical society, Landmarks and City officials? The Hills preservation should be a priortiy. City Halls basking in tourism money that won't continue ft the old charm of the community goes to condo after condo giving away green spaces to ... See More
10
Like · Reply · 3y

Sandra Ruminski Regios I agree with this post.
The city obviously doesn't care about preservation and protection. Just the almighty$$$

Like · Reply · 3y · 2

Sharon Ruminski-Ankiewicz That is so sad.... I loved the old hill...

Like · Reply · 3y

View 1 more reply

Marilyn Blinkhorn This is really awful.

Like · Reply · 3y

Thomas Walker They are all shit now ..no one cared to keep them up

Like · Reply · 3y

Thomas Walker Its sad that munjoy hill wont be trashy any more

Like · Reply · 3y

Mary Anderson Emmons Trashy wtf have you been up there. The only thing people are mad about is tearing down old houses and putting up ugly condos

Like · Reply · 3y

Erica Smith Thomas you obviously only hung out with those types of people.. Munjoy Hill is beautiful!

Like · Reply · 3y · 3

Lucille Reed So sad, sorry !

View 1 more reply

Joyce Slater Sad !

Like · Reply · 3y

Nancy Ciampi Wyman This is so very sad! Munjoy Hill will always be Munjoy Hill but it looks like Condo Hill. Makes me so sad.

Like · Reply · 3y · 2

Carol Lambert Sorry this is happening

Like · Reply · 3y

Sue Jahns awful

Like · Reply · 3y

Peter Adams Today is last day for written comment to the Planning Board: hcd@portlandmaine.gov The hearing is next Wednesday the 12th at 8 pm at city hall. Will post the developer's proposed design shortly.

Like · Reply · 3y · 2

Irene Kathleen Morgan so sad

Like · Reply · 3y



Jack Milton http://www.pressherald.com/.../portland-planning-board.../



PRESSHERALD.COM

Portland Planning Board approves new 7-unit condo development on Munjoy...

Like · Reply · 2y



Lori Baxter-Gaunder 750 sq feet? That's like living in a walk in closet!

Like · Reply · 2y



Chuck Vessey I wonder where they will park

Like · Reply · 2y



Monique J Gagnier ▸ **Munjoy Hill Residents (Past & Present)**

February 27, 2016 ·

The remnants of 40 Quebec St. Demolished yesterday.



34 103 Comments

Matt Nickerson Crazy

Like · Reply · 3y

Michele Collins Lane by any chance any before pictures ?

Like · Reply · 3y

Pam Conlogue It was my sisters house she sold and they told her they would not demloish.

1

Like · Reply · 3y · Edited

Pam Conlogue Monique I have many before pictures, even as early as last month inside and out.

1

Like · Reply · 3y · Edited

View 3 more replies

Michele Collins Lane why did it come down ?

Like · Reply · 3y

Hide 12 Replies

Monique J Gagnier The owners are going to rebuild. Sadly I don't have a before photo but someone on here will probably.

1

Like · Reply · 3y

Michele Collins Lane was it the white house on the corner ?

Like · Reply · 3y

Monique J Gagnier Nope. Here it was this past October. It's the one hidden behind the tree



4

Like · Reply · 3y



Tom Martin It came down so the rich from out of state can build another house and help drive up local taxes and force good locals out...

Like · Reply · 3y

5



Pam Conlogue You have that right. My sister reently sold this house and the buyer told her they would not demolish the hosue. They waited 6 months they never lived in it. So Sad...It is what it is.

Like · Reply · 3y · Edited

4



Soozy Mack I just drove past today and did a doubletake

Like · Reply · 3y



Rita Woodman Progress has to go on!!!

Like · Reply · 3y



Liz Coburn Very sad Portland losing all its roots

Like · Reply · 3y

6



Kristian Webber We should burn munjoy and Start over

Like · Reply · 3y · Edited



Pam Conlogue Why? Kris Weber?

Like · Reply · 3y

1



Robin M. Plante I felt really sad seeing it being torn down so another condo can be put up. Property taxes will go through the roof.

Like · Reply · 3y

3



Pam Conlogue Sorry Robin, aren't they already

Like · Reply · 3y



Robin M. Plante Yes Pam, taxes are very high on the hill.

Like · Reply · 3y



Constance Mailman I lived at 60 :•(

Like · Reply · 3y



Robin M. Plante I live across the street at 39.

1

Like · Reply · 3y



Kathie Dolan Why did they take it down?

Like · Reply · 3y



Pam Conlogue To rebuild a more modern home new buyer new condos

Like · Reply · 3y · Edited



Kathie Dolan Grrrr!

1

Like · Reply · 3y

View 1 more reply



David Lee I lived on the hill when only people who lived there were consider poor money way we were but we were very rich with friends all around us

11

Like · Reply · 3y



Jean Locey Time moves on someone said. Cool... But put a house there not something that resembles a prison or warehouse... Smdh... The hill is going away slowly. Bottom of Fox St, another monstrosity going up... Fox and Anderson St. Naaaasty

3

Like · Reply · 3y



Patty Galope Hate those ugly ass buildings...a nice house would be better , but I still don't like all the rich from out of state buying & ruining our neighborhood ...disgusting !!!

3

Like · Reply · 3y



December 2017:



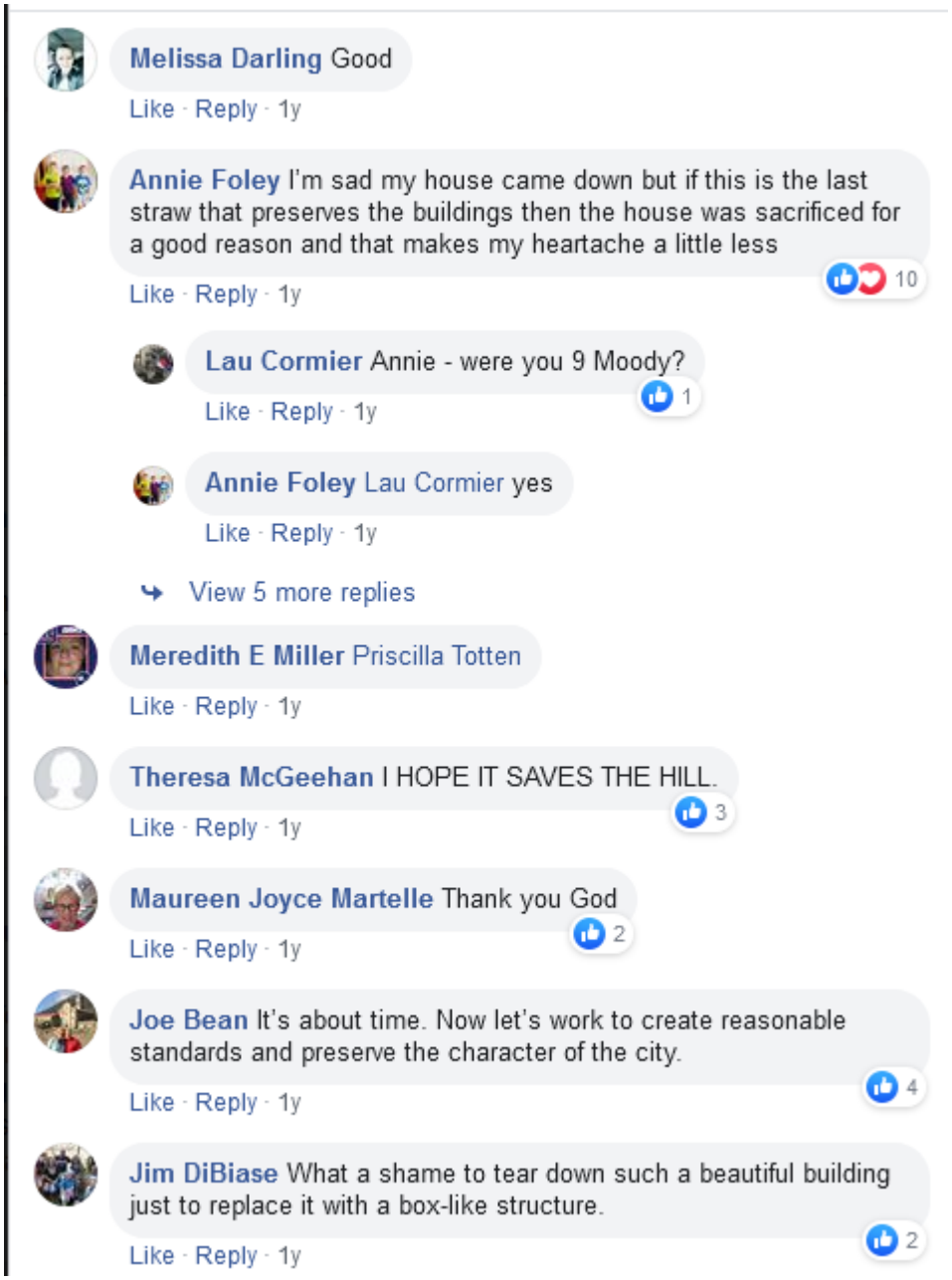
Melissa Darling Good
Like · Reply · 1y
Annie Foley I'm sad my house came down but if this is the last straw that preserves the buildings then the house was sacrificed for a good reason and that makes my heartache a little less
10
Like · Reply · 1y
Lau Cormier Annie - were you 9 Moody?
1
Like · Reply · 1y
Annie Foley Lau Cormier yes
Like · Reply · 1y
View 5 more replies
Meredith E Miller Priscilla Totten
Like · Reply · 1y
Theresa McGeehan I HOPE IT SAVES THE HILL.
3
Like · Reply · 1y
Maureen Joyce Martelle Thank you God
2
Like · Reply · 1y
Joe Bean It's about time. Now let's work to create reasonable standards and preserve the character of the city.
4
Like · Reply · 1y
Jim DiBiase What a shame to tear down such a beautiful building just to replace it with a box-like structure.
2
Like · Reply · 1y



Ruth Tuttle-Jones I am glad 😀 that passed. It is very sad that the person who bought the house that was demolished the other day 😢 couldn't have found a way to fix it up to fit into their plans. They do not make houses like they did back in the day. Merry Christmas to all the Munjoy Hill family past and present.

Like · Reply · 1y · Edited 4



Robert Freeman They make them better, not necessarily better looking.

Like · Reply · 1y 1



Korel Davis-Williams I wish this had taken place a long time ago. I took awalk on munjoy about a month ago. My heart sunk.

Like · Reply · 1y 3



Jean Dunphy Awesome! Save the Hill. Save Portland!

Like · Reply · 1y



Chris Coose I am very grateful to you, Nini. I can probably speak for all the residents of 87 St. Lawrence St. too.

Like · Reply · 1y · Edited 1



Bill Soper Good

Like · Reply · 1y



Francene Downs Wonderful we can't let them destroy the hill. Look what happened to Lincoln park, half gone, Union Station destroyed. No more

Like · Reply · 1y 1



John Bennett Thankful but also wary!

Can't demolish to make room for the ugly condos?

Will this lead to creative removal? Do we need more firefighters!

Think we need ordinances requiring new housing to actually blend into current styles in neighborhoods

Like · Reply · 1y 1



Monique J Gagnier There has to be some middle to agree on. I've seen some really nice restores up on the hill and then some really ugly things, like on upper Sheridan street.... it all looks the same.

Like · Reply · 1y · Edited



Kathleen Carr Bailey I remember many years ago when the protect on North & Walnut St,was proposed the neighborhood seemed to have a lot more say. Though the project was built, and we didn't get all the green space we wanted, they still respected our voice.

Like · Reply · 1y

1



Rebekah Kirsanova I'm just curious, now that you've stopped new buildings from going up, who's footing the bill to fix the ones currently falling down?

Like · Reply · 1y

1



Mary Casale Clearly you don't understand what the moratorium is . It does not stop new buildings . Please educate yourself before you speak .

Like · Reply · 1y



John Bennett City has code enforcement regs that need to be enforced. Property owners need to be responsible

Like · Reply · 1y



Rebekah Kirsanova That's provided those owners both have and want to spend the money needed to actually make the home livable. I'm actually currently living in a home that I know as a carpenter by trade, is cheaper to demolish than fix. I agree 100% no more condos in Portland. Period. There are more than enough. I'm not a fan of the up in a month, cookie-cutter, "low income" housing establishments either. I've also seen the inside of a great many homes on the hill. It's sad to see old homes go. Old landmarks that are precious to us. But if moratoriums are going to be handed out, a better long term plan needs to be in place. Something a lot better than the landlord should fix it up. If they came down hard on



Heather Ashby What is "ugly" is a matter of opinion. I think run down, peeling paint, cracking wood, splintered steps, unkept, homes of any sort are ugly

Like · Reply · 1y

1



Mary Casale Clearly you don't know what the moratorium is about . It is a pause . The R-6 zoning that was enacted in 2015 had no restrictions on tear downs . Realistically someone could buy a block of homes and tear them down. They didn't need to be in disrepair , or neglected. . The current tear downs in my block are 2 buildings that were meticulously maintained by the owners (for the last 40 yrs that I am aware of)

Like · Reply · 1y

1



Heather Ashby Thanks for insulting my intelligence. I do know what it is, and what it means. Who you should be explaining it to is all the people breathing a sigh of relief thinking that the Hill is now saved from demolition. The fact of the matter is not that the home was meticulously maintained, but that the new owner has the right to do with it what they wish...because they own it...not the city...not the neighbor...

Like · Reply · 1y



Mary Casale Heather Ashby Well again Heather, that's not quite correct . We have zoning ordinances and design standards for a reason . Cities have Conservation Districts and overlay zoning for the protection of neighborhoods to maintain a scale , mass , and streetscape that reflects the existing properties . Hopefully this is where we are heading .

Like · Reply · 1y

2



Enoch Bradford Wenstrom Property owners in portland have never had the right to do anything they want to. Not sure what neighboorhood you own property in. There are always restrictions. There is nothing wrong with munjoy hill residents wanting to put restrictions in place that maybe focus more on rennovation vs teardowns. You cant tear everything down in the west end just because you own it.

Like · Reply · 1y

2

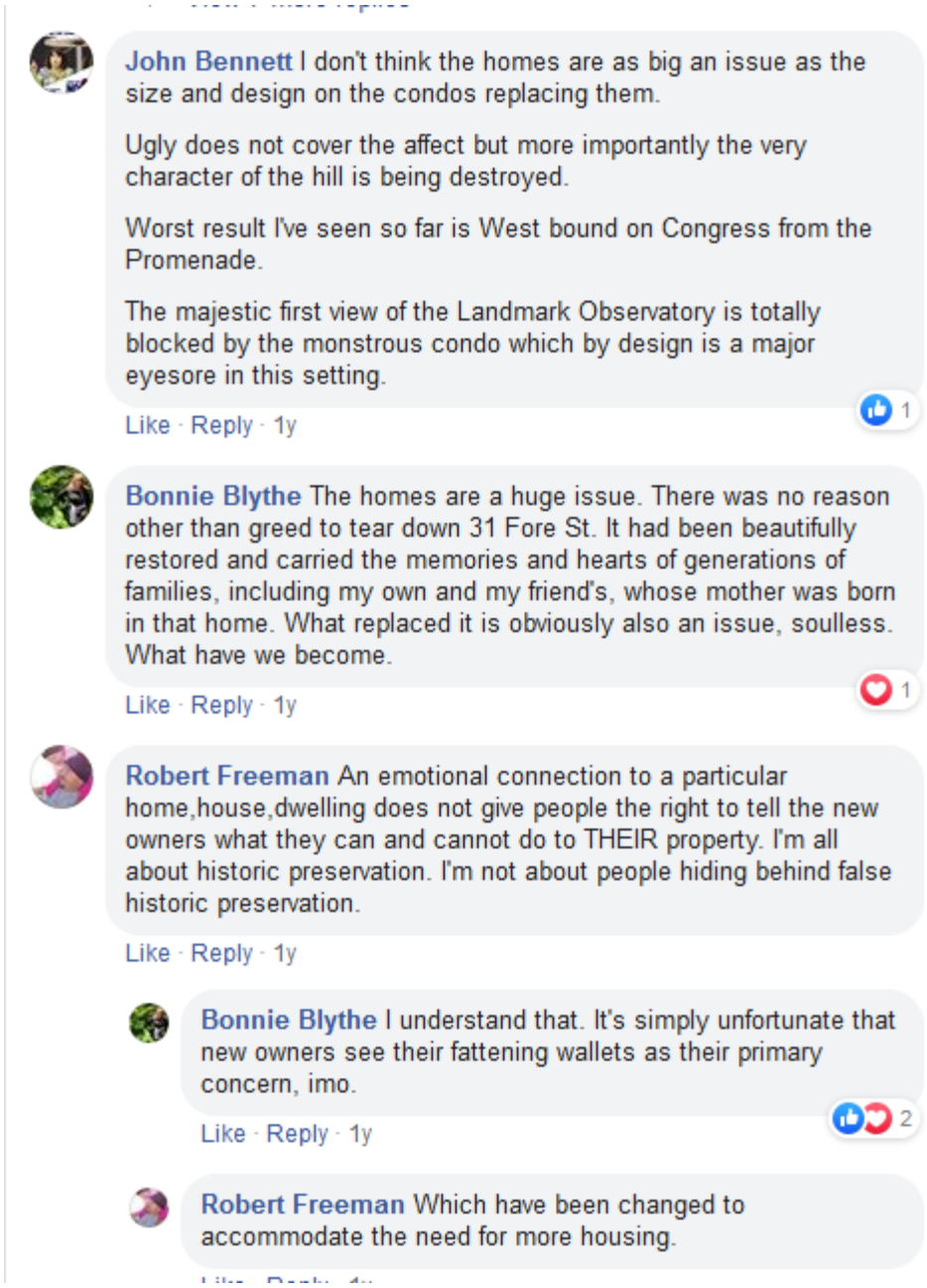

Words that appear most frequently related to the teardowns and/or new developments are "sad," "ugly," box,"ugly condo," and "eyesore." There are a couple references to Union Station, and at least two comments asking "Doesn't Portland have design ordinances so neighborhoods will retain their character?" and "I don't understand why Portland wouldn't want the newly built homes to fit in with the character of the Hill."

Sentiment among those I speak with runs about 97% towards protection of the neighborhood from out of scale and inconsistent design, as do the Facebook posts.

And, finally,



Frank Fowler once again money takes prioity so sad

Like · Reply · 1w · 3

Bonnie Blythe So much BS. The current council needs to take responsibility. Why/how do they keep getting voted in??

Like · Reply · 1w · 2

Brent Owen New residential construction per se isn't the issue. Older buildings often reach the end of their useful life. The issue is these proposals are ugly and out of place. Doesn't Portland have any design ordinances so that neighborhoods will retain their character?

Like · Reply · 1w · 2

Rosemarie Cartonio Dynda This is very disappointing grew up on Montreal Street and lucky enough my elderly mom is still there unfortunately she lives across from where this project is being proposed, this will destroy the neighborhood and over crowd yet another street on munjoy hill and a lot of bs on making more affordable housing in the city that will never happen on the hill again 😢

Like · Reply · 1w · 2

Ellen Kanner Sure, demo, as long as affordable housing is part of the plan for this building! And make it fit the character of Portland - where are the ordinances for this?

Like · Reply · 1w · 4

Karen Snyder The ordinance have specific loopholes for developers to get out of putting affordable housing. Thank these specific city councilors for this.. Duson, Thibodeau, Mavodones, Ray, Costa, Cook

Like · Reply · 1w

Timothy M. Smith Stop the demo,no more distraction of houses that can be used as affordable housing for young people looking to buy a house

Like · Reply · 1w

Timothy M. Smith Distruction

Like · Reply · 1w

Connie Green Give it to em Smitty! That's all BS And I don't live there. But I've had plenty of family that has. Those were childhood memories, and great ones they were.

Like · Reply · 1w

Shirley DiBiase They spoiled Portland when they got rid of Union Station and made the Mall /which took away all the business from down town Congress St.

Like · Reply · 1w

Shirley DiBiase So now they plan to spoil the Prom,Sad🙈

Like · Reply · 1w

Sandra Wyman Seriously I grew up on the hill I have not been able to go on to munjoy Hill since before my mother sold the house makes me very sad they have destroyed what was once a family community I could walk down the street anytime of the day and night and feel safe not no more I won't even go up there it's so depressing not to see condos everywhere just saying

Like · Reply · 1w

3

Terry Thompson Westberry Leaving it alone

Like · Reply · 1w

Lee Theriault This is absolute bull. this should not be happening, it's a historic place and it should be left alone. they can find plenty of other areas to build their condos or apartments whatever it is they're doing

Like · Reply · 1w · Edited

3

Shirley DiBiase What a sad thought....but sadly they will do it 🙈

Like · Reply · 1w

1

Nini Mc Manamy Would you pay $500000 to a million for a condo in this awful building? It looks like a mill.

Like · Reply · 1w

Lydia Savage Nini Mc Manamy no but a developer would and hope to turn a profit down the road.

Like · Reply · 1w

Lydia Savage Nini Mc Manamy the bigger question about this is what Mainer an afford to do that.

Theresa McGeehan This IS VERY SAD

Like · Reply · 1w

Francene Downs Horrifying construction that is replacing beautiful homes like on Moody Street.

Like · Reply · 1w

3

WM Jel voters have to change whose in city hall thats who is allowing this

Like · Reply · 1w

2

Donna Ramos Oh no!

Like · Reply · 1w

Kevin Dyer Portland leadership only care about the money to bad they have no clue how to use it!!!

Like · Reply · 1w

2

Greg Loring My old neighborhood Willis st. And Montreal st. I can't believe this will be allowed! Destroying family neighborhoods and an incredible way of life for future families! Totally insensitive and stupid land and money grubbing fools! Haven't they learned anything from the union station debacle or Franklin arterial displacing hundreds of families and homes for what? A road!! To where ...the old port! People have to organize and kill this development! A perfect example of the goose that laid the golden egg! The city council must be reigned in! They are destroying what makes Portland a great and unique city! Selling out to these fly by nighters who hit! Make their money 💰! And disappear leaving a trail of immoral destruction In their wake!!!

Like · Reply · 1w · Edited

3

Comments below range from when this was posted (August, 2019) through 25 hours ago.

Bill Skoolicas is with Noreen Moriarty Skoolicas.
August 6



Bill Skoolicas is with Noreen Moriarty Skoolicas in Portland, Maine.
August 6

As I passed by the end of Hancock Street on my morning ride to the State Pier, I took note of the view, which will be interesting to anyone who grew up in Portland, like myself. It is as though a new street from another place was just plonked down at the base of Munjoy Hill, fully formed and functioning. It's a bit surreal.

239 270 Comments 22 Shares

Like Comment Share

View previous comments 52 of 139

Michael Mcgarvey Seattle ?
Like · Reply · 11w

Elaine Saulle Don't like it

Mike Lafavore They ruined the area. I was born on the corner of India and Newbury and lived on Commercial Street later. The waterfront could be a little stinky and those train tracks were treacherous in the winter, but it was real. Now it's a Disney version of a working waterfront
Like · Reply · 11w · Edited 7

Stephen McCarthy Ugly,ugly architecture. 7
Like · Reply · 11w

Kathie Dolan They look like a cross between Lego-land and the shipping crates down by the bridge! 🤩
Like · Reply · 11w

Mike Mitchell Trendy Condos for the trendy rich I sure miss the Portland I knew and loved.
Like · Reply · 11w · Edited 8

Jeremiah St.Clair That's not our Portland. 4
Like · Reply · 11w

Mike Mitchell No its a real shame Portland has become trendy and for the rich
Like · Reply · 11w · Edited 2

Jeremiah St.Clair I didnt mean it wasnt real or Portland, Maine. It's just not "our" Portland. At least, not anymore. 2
Like · Reply · 11w

Terri Pierce-Moriarty Disgusting

Like · Reply · 11w

Anthony Taylor Generic facades. While this sort of thing is busting out up and down the coast, New England's hour from the coast decaying industrial burgs are losing their architecturally significant old buildings and filling up with low lifes and vacant lots. The water view-front is turning out like the Bronx or the Fenway.

Like · Reply · 11w

GabrielJohn Chassé So many good sized cities throughout the country seem to be going for this modern generic look .

Like · Reply · 2w

Jennifer Lunden This horrifies me.

2

Like · Reply · 11w

Jennifer Lunden And it reminds me of the time a couple years ago when I was driving through that part of town, an area I was familiar with, having worked there for 3 years, and at the end of the street I took a right and for a minute I wondered where I was. Nothing was recognizable, and nothing felt like Portland.

1

Like · Reply · 11w

Sarah Lundin-Erickson This is real? Wow! This is not Portland.

1

Like · Reply · 11w

Thomas Ross sad to see great neiborhoods bulldosed for a few bucks....

2

Like · Reply · 11w

James Cagney IV The alien ships have landed.

Like · Reply · 11w

Terri Pierce-Moriarty Disgusting

Like · Reply · 11w

Anthony Taylor Generic facades. While this sort of thing is busting out up and down the coast, New England's hour from the coast decaying industrial burgs are losing their architecturally significant old buildings and filling up with low lifes and vacant lots. The water view-front is turning out like the Bronx or the Fenway.

Like · Reply · 11w

GabrielJohn Chassé So many good sized cities throughout the country seem to be going for this modern generic look .

Like · Reply · 2w

Jennifer Lunden This horrifies me.

2

Like · Reply · 11w

Jennifer Lunden And it reminds me of the time a couple years ago when I was driving through that part of town, an area I was familiar with, having worked there for 3 years, and at the end of the street I took a right and for a minute I wondered where I was. Nothing was recognizable, and nothing felt like Portland.

1

Like · Reply · 11w

Sarah Lundin-Erickson This is real? Wow! This is not Portland.

1

Like · Reply · 11w

Mimi Grampy No Character! No Charm ! No Portland!

2

Like · Reply · 11w

Ivory Wind Rieger I've been taking all my old Portland peeps for the tour of this street and they all gape and shake their heads "NO" along with me. 😉

Like · Reply · 11w

Fred Trout one of the sad parts is that the people on the left side of the street thought they were getting a water view, but then the buildings on the right side of the street blocked the view of the water. too bad.

1

Like · Reply · 11w

Thomas Joyce It looked so much better with the two grain elevators 😁

6

Like · Reply · 11w

Jennifer Kastelic I've gotten very disoriented a few times there.

1

Like · Reply · 11w

Marie Eger Portland Planners brought in too many modern buildings and took away the charm.

3

Like · Reply · 8w



GabrielJohn Chassé Like a cheap takeoff of Boston

2

Like · Reply · 2w



Thom Sambrook There are no "Neighborhoods" anymore. Sad.

3

Like · Reply · 2w



Roger Mayo There are still neighborhoods. I own a house in one of them, it's called Parkside. Lovely old apartment buildings and tree lined streets.

1

Like · Reply · 2w



Thom Sambrook Hoping our neighborhood lasts....

Like · Reply · 2w



Peter Green What would Henry write? A lamentation.

1

Like · Reply · 1w



Terry Thompson Westberry its so sad

Like · Reply · 1w



Susie Hughes Fat local lawyers faked a clearing of eminent domain and then later owned Portland properties search the title and find they should never have own these properties

1

Like · Reply · 1w



Elizabeth Ruby Simkoff And it looks like anytime USA now!

1

Like · Reply · 1w



Anthony Taylor Nondescript and generic architecture with no sense of place or local inspiration. Comparable to the "new-old fashioned" brick facades in the shopping center that was built to replace the failed Worcester Center Galleria mall.

3

Like · Reply · 1w



Lex Jones It's like there has been another Great Fire.

Like · Reply · 6d



Bob Farrington The collapsed birth canal of architecture.

Like · Reply · 6d



Ray Pe Benito There are some New Amazing buldings in Portland.Portland in the 70s had been i.n Decay .Its how life is we must lose something to gain something.I would rather see New modern then run down blight,There are still plenty of older buildings to admire lets save them and keep them useful.

Like · Reply · 4d

Sheila Coughlin It's awful!

Like · Reply · 4d

Rachelle Cliche I grew up in munjoy south. #60, the first lot on Fore going up the Prom. Literally around the bend from this picture. All I can think of is Jordan's Meats and the village around the corner, and the old Crosby lot (where most of this is built) where we used to play stick ball then climb the fence and walk the deserted tracks. Very surreal and sad in so many ways.

5

Like · Reply · 4d · Edited

Bonnie Blythe The developers talk about what an improvement this is over the "wasted space". We loved that wild land waterfront. I'm sure they think Munjoy South is "wasted space" too 😞

3

Like · Reply · 4d

Paul Luise If shown that picture to identify I'd never have guessed Portland.

Like · Reply · 3d

John Furman It's like 1960 all over again. Sad.

Like · Reply · 19h

Appendix B

From: Design Manual promulgated by the Planning Authority pursuant to Sections 14-498 of the City of Portland's Land Use Code. "Design Standards and Guidelines and maps contained as appendices to this Design Manual were individually adopted by the Planning Board or City Council following public Hearings."

R-6 Infill Development Design Principles & Standards

From: Purpose

I. All developers, no matter how small their project, have a responsibility beyond simply meeting the needs of their end users. They have a public responsibility to add to and enhance the neighborhoods in which their projects are built. **New residential construction within Portland's compact R-6 zones should relate to the predominant character defining features of the neighborhood.** The design of new development is critical, particularly elements such as the orientation and placement of a building on a site; relationship to the street; and mass, form and materials. The Design Certification Program aims to insure that infill housing development makes a positive contribution to the City's neighborhoods.

The intent is to ensure that infill housing is compatible with the neighborhood and meets a high standard of building design, while allowing for diversity of design. Projects will be reviewed for consistency with R-6 Infill Development Design Principles and Standards. These principles and standards are interdependent and should be considered holistically. The applicant must demonstrate that a proposal is consistent with the Design Principles. The standards are time-honored ways of achieving the Principles.

II. DESIGN PRINCIPLES AND STANDARDS

PRINCIPLE A Overall Context

A building design shall contribute to and be compatible with the predominant character-defining architectural features of the neighborhood.

Explanatory Note: The central idea behind good design in an established neighborhood is to reinforce positive features of the surrounding area, which provide its unique identity. To a large degree, the scale, mass, orientation, and articulation of an infill building should be compatible with that of the buildings that surround it.

Compatibility refers to the recognition of patterns and characteristics which exist in a given setting and the responsiveness of a new design with respect to these established patterns and characteristics. While there is no one specific solution for a given setting, there are a number of

building characteristics which can be used to gauge visual compatibility of new residential construction in an existing neighborhood. These characteristics include design elements such as:

1. Scale and Form: height, massing, proportion of principal facades, roof shapes and scale of the architectural features of the structure.
2. Composition of Principal Facades: proportion of facades; orientation of openings; ratio of solids to openings; rhythm of fenestration; entrance porches and other projections; and relations of materials, texture and color.
3. Relationship to the Street: walls of continuity; rhythm of spacing and structures on streets; and orientation of principal elevations and entrances to the street.

Each infill project will have a unique context of surrounding structures and sites with some strong, unifying characteristics, and some that are subtle and less obvious. The more definite and easily discernable traits within an established neighborhood should serve as a basis for a design solution, which can reinforce the positive characteristics of the surrounding development patterns.

On corner properties, where the architecture has a greater visual impact upon adjacent public spaces, both public facades will be evaluated with equal care.

STANDARD A-1 Scale and Form Relate the scale and form of the new building to those found in residential buildings within a two-block radius of the site, that contribute to and are compatible with the predominant character-defining architectural features of the neighborhood. Special attention shall be given to the existing building forms on both sides of the street within the block of the proposed site.

STANDARD A-2 Composition of Principal Facades Relate the composition of the new building façade, including rhythm, size, orientation and proportion of window and door openings, to the facades of residential buildings within a two-block radius of the site that contribute to and are compatible with the predominant character-defining architectural features of the neighborhood. Special attention shall be given to the existing facades on both side of the street within the block of the proposed site.

STANDARD A-3 Relationship to the Street Respect the rhythm, spacing, and orientation of residential structures along a street within a two-block radius of the site that contribute to and are compatible with the predominant character-defining architectural features of the neighborhood. Special attention shall be given to the existing streetscape on both side of the street within the block of the proposed site.

PRINCIPLE B Massing

The massing of the building reflects and reinforces the traditional building character of the neighborhood through a well composed form, shape and volume.

Explanatory Note: Massing is a significant factor that contributes to the character of a building. The building's massing (as defined by its bulk, size, physical volume, scale, shape and form) should be harmonious with the massing of existing buildings in a two block radius. The massing of a building can be defined as the overall geometry (length, width, and height) of its perceived form. The overall height of the form (actual and perceived) as well as the geometry of its roof is of particular importance in defining the massing of a building.

STANDARD B-1 Massing The building's massing (as defined by its bulk, size, physical volume, scale, shape and form) should be harmonious with the massing of existing buildings in a two block radius.

Google Groups

Munjoy Hill Historic District

Vana Carmona <vanacarmona@gmail.com> Dec 5, 2019 12:20 PM
Posted in group: **Planning Board**

Dear Members of the Planning Board,

First and foremost, my husband and I want to express our 100% support of the proposed Munjoy Hill Historic District (HD). We would urge you to approve it as soon as possible without any changes that would undermine it.

It is essential to get this passed in order to preserve our neighborhood for its historic value and also to protect it — and us — from the developers and demolition that is taking place regularly here.

Just in November, two buildings were demolished within one block of our home.

We believe that Munjoy Hill residents support it, for the same reasons.

In light of that, lately we have been deeply disturbed by articles in the Press Herald concerning the proposed HD. This coverage has been harshly and unfairly against it.

For example, the recent front page article with a photo of the the opposition showed no comparable coverage for those in favor. Those adamantly opposed are clearly part of an organized media effort to defeat it.

In our view, this is not reflective of the majority sentiment.

I have attended a number of meetings pertaining to the HD and I have yet to see these people in attendance making their opinions known for all to ask pertinent questions.

Those who have come to the relevant meetings are almost 100% IN FAVOR of the HD. They have taken the time to study the issue and go on record as such.

We urge your approval of the HD proposal and urge you not to be misled by the negative publicity.

Sincerely,
Vana and Ralph Carmona

Google Groups

Kelly, David <david.c.kelly@uconn.edu> Dec 5, 2019 2:09 PM

Posted in group: **Planning Board**

Monjoy Hill historic district seems like a bad idea. Nothing unique about the neighborhood. Structures and the same neighborhoods can be found everywhere. And such a designation would be unfair to home owners imposing an unnecessary burden.

David C. Kelly

Portland, Maine

Google Groups

Munjoy hill

Debrah Yale <dpyale@gmail.com> Dec 5, 2019 1:44 PM
Posted in group: **Planning Board**

I am writing once again to voice my opinion if leave Munjoy hill alone. If I had to owned my home the Hercules Dam house under this designation I would have never been able to afford the luxury of renovating and restoration work that needed to be done.
Nor would I have been able to restore 47 st Lawrence or restore my property on 50 Waterville st. Imagine I was able to do all of this in my own with out any interference from the City. The house stock for the most part on Munjoy hill is still substandard built homes. The houses are put together with bits and pieces. Most house are toxic environments that include rodents. I feel strongly any added zoning restricts restoring or reinventing property. I would strongly recommend you leave this neighborhood alone.

Debrah Yale
Broker, ABR, Benchmark Real Estate, The Landry Team
(207) 776-2613 | dyale@benchmarkmaine.com
benchmarkmaine.com
72 Pine Street #16 | Portland, ME

IMPORTANT: The contents of this email and any attachments are confidential. They are intended for the named recipient(s) only. If you have received this email by mistake, please notify the sender immediately and do not disclose the contents to anyone or make copies thereof.



IMPORTANT: The contents of this email and any attachments are confidential. They are intended for the named recipient(s) only. If you have received this email by mistake, please notify the sender immediately and do not disclose the contents to anyone or make copies thereof.

Yale
PO Box 562
Portland , Me. 04112

Rippleffect.net

This electronic message transmission contains information from Debrah Yale Broker with Benchmark Real Estate Agency which may be confidential or privileged. The information is intended to be for the use of the individual or entity named above. If you are not the intended recipient, be aware that any disclosure, copying, distribution or use of the contents of this information is prohibited. If you have received this electronic transmission in error, please delete it and notify me by telephone (207) 776-2613or by electronic mail yaledebrah@gmail.com immediately.

Emails sent or received shall neither constitute acceptance of conducting transactions via electronic means nor shall create a binding contract in the absence of a fully signed written agreement.

Google Groups

Munjoy Hill Historic District comment for consideration

G Bahlkow <gbahlkow@gmail.com> Dec 5, 2019 1:27 PM
Posted in group: **Planning Board**

Hi

As a property owner in the proposed Historic District on Munjoy Hill I encourage the Planning Board to advance this designation. We are very supportive.

We recently renovated the two family home at 42 Lafayette Street and in so doing took great pains to honor the Historic District standards. We also have recently submitted permit applications to add two dwelling units for a total of four, again with great respect for the Historic District standards.

We believe our situation demonstrates renovations and additional dwelling units are reasonable expectations To accomplish within the Historic District.

Again, please advance the designation. Thank you,

Gary Bahlkow
Kimble Greene

Sent from my iPad

Google Groups

Jeremy Rutkiewicz <jeremyrutkiewicz@gmail.com> Dec 5, 2019 1:55 PM
Posted in group: **Planning Board**

Dear Planning Board,

I am writing to you to ask you to please oppose creation of the proposed Munjoy Hill Historic District.

For many of us, the overlay district was already an agreeable compromise to the many concerns regarding development on the hill.

The formal designation of the hill as a historic district is TOO FAR. I look forward to continuing to live in a city that is future forward, and I hope that the planning board does not buy into the false narrative that there is overwhelming support for the historic district in the neighborhood. There is not.

I appreciate all of the work that the planning board does to continue to ensure that we cohabitate in a vibrant, ever-evolving community without infringing on the rights of property owners and dampening architectural innovation.

Thank you!
Jeremy Rutkiewicz
161 Congress St

Google Groups

Munjoy Hill designation

Lorrayne Carroll <rayne.carroll6@gmail.com> Dec 5, 2019 2:04 PM
Posted in group: **Planning Board**

To the Board,

As a homeowner (16 years) and resident (30 years) of Munjoy Hill, I write to endorse the designation of the specific areas of Munjoy Hill as the “Munjoy Hill Historic District.” I write, too, as a scholar of Early American Studies with a deep interest in the history and culture of New England, Maine, and Portland, topics I teach and write about at the University of Southern Maine.

Drawing on both my lived experience as a resident and my research, I urge the Board to endorse this proposal and to work for its passage in the City Council. The Hill has undergone significant changes in the last several years, and many of those changes have had destructive effects. Most destructive are the loss of diversity within the community due to the lack of affordable housing. As Greater Portland Landmarks notes, affordable housing can flourish in historic districts, especially when new building is subjected to a variety of restrictions that ensure that scale and architectural consonance are priorities. Demolitions and consequent construction of wildly out-of-scale and architecturally dissonant buildings threatens the local, specific nature of the Hill, its features as a gem of late 18th, 19th and early 20th-c. history. Largely unrestricted development has not served the Hill and its community well; it’s time that the City recognizes and takes action to protect the neighborhood from further depredations that threaten the historical and current cultures Munjoy Hill. The designation as a historical district, as the current plan proposes, is a necessary beginning.

Sincerely,
Lorrayne Carroll
31 North St.
Portland

Google Groups

Munjoy Hill Historic District

Lydia Savage <lsavage@maine.edu> Dec 5, 2019 1:53 PM
Posted in group: **Planning Board**

Dear Planning Baord members,

I am writing to express my complete support for the proposed Munjoy Hill Historic District and Individual Landmark Designations. As an urban geographer and planner, I have watched with dismay as historic buildings on Munjoy Hill have been purchased and demolished in order for towering buildings to be built from lot line to lot line. The buildings destroyed were an important and significant part of Portland's history and the new buildings will be outdated in 20 years and reflect no local history and could be found anywhere. One need look no further than the St John Street strip mall that replaced the historic train station or Franklin Artery which wiped out a neighborhood to see the damage done.

Preserving what is left of the remaining historic buildings will make Portland a city that is charming to visitors (nobody comes to look at orange or gray concrete towers) and provides a dynamic and livable neighborhood for residents. I am fortunate to live on Munjoy Hill but cringe when I see towering buildings that could be found in any city in the country. High density housing is possible in historic districts and our economy will thrive for residents and tourists. I am just back from California and there are few spots as lovely as Portland, ME but it is quickly being erased by new developments and buildings that ignore our history and what draws people to the city.

Sincerely,

Lydia Savage
Professor and Chair
Geography-Anthropology
Muskie School of Public Service
University of Southern Maine

19 Melbourne St.
Portland, ME 04101

Google Groups

munjoy hill

william gemmill <wgemmill1@gmail.com> Dec 5, 2019 2:03 PM
Posted in group: **Planning Board**

This is an important landmark and should be designated as such.

William Gemmill

Google Groups

Munjoy Hill Historic District

Bruce Wood <brucesar@yahoo.com> Dec 5, 2019 2:59 PM
Posted in group: **Planning Board**

Chair Dundon and members of the Planning Board,

I urge you to approve the Munjoy Hill Historic District as approved by the Historic Preservation Board. The proposed District is important to Munjoy Hill and the City of Portland in that it protects many blocks of historically significant housing that is characteristic of the values we residents of Portland value. It allows development and alterations while protecting buildings that Portland needs to move into the future with wonderful housing stock.

Historically, housing prices in Portland's historic districts have risen at a rate greater than that of areas not so protected. Replacement in kind is allowed without review in most cases. Alterations, including improved weather-proofing, are allowed with just a bit more review than if one is outside the district. I have observed many cases in which the City's historic preservation staff and the Historic Preservation Board worked with owners to improve planned changes and often this coordination has reduced the cost of a project.

Please support the proposed Historic District as proposed.

Thank you,
Bruce Wood
Old Port

Google Groups

Munjoy Hill preservation

Beth Snyder <snyderbes@gmail.com> Dec 5, 2019 3:00 PM
Posted in group: **Planning Board**

Dear Planning Board,

Before I begin, I want to thank you for making this process an open one, one in which residents have a voice in the future of our city. Knowing that you'll read my email and listen to us at our upcoming meetings makes me feel that we, as citizens, have your regard.

The history of Munjoy Hill has a story to tell, just as our West End and Old Port neighborhoods have. Portland can celebrate its working class and immigrant residents over the years by giving the Hill the benefit of strong preservation efforts.

Preservation regulations that prevent unneeded demolition or inappropriate changes to historic properties will perpetuate the value of the neighborhood and help make Portland a city that visitors will want to come back to, that residents will want to live and work in. Better practices in design and material use will not only increase architectural cohesiveness, they will boost the city's overall appeal.

We need more housing, especially affordable housing -- something the recent demolitions and building of luxury condos haven't given Portland.
The reuse of historic buildings through ADU's, additions, and new units within existing houses can augment the number of housing units and provide more affordable housing on the peninsula. All without destroying the history, ambiance, and tree canopy of the neighborhood.

The high density on Munjoy Hill and the rest of the peninsula makes me wonder why we aren't exploring housing options close to the major traffic arteries that lead to the peninsula. With good and frequent bus transportation, those areas would be economical and attractive alternatives to our already dense neighborhoods.

Climate change is another concern. The impact of demolitions and new construction on our environment has a high negative cost. Even when the new structure is energy efficient, it takes nearly a century to compensate for its initial destructive impact on the environment during its construction. Reconfiguring and repurposing existing houses hurt our environment less.

I write you strongly in favor of a historic district on Munjoy Hill.

Thank you for taking time to consider my position,

Beth Snyder
81 North Street
Portland

Google Groups

Proposed Historic District

Stephen Gaal <steve@gaal.com> Dec 5, 2019 3:27 PM
Posted in group: **Planning Board**

Dear Planning Board,

I am unable to be at the meeting on December 10. I want to re-iterate my often stated total support for the proposed Munjoy Hill Historic District and Individual Landmark Designations. I have lived in a place without zoning of any kind (Tamworth, NH) and in a place with a quite strict Historic District Commission (Beacon Hill, Boston.) I think the historic district proposed for Munjoy Hill is an excellent plan that achieves a happy medium between the two other experiences I mentioned. I urge you to vote YES on this proposal and move it on the the City Council.

Respectfully,

Stephen Gaal
Munjoy Hill, Portland ME
steve@gaal.com
(603) 651-9183 mobile

The Russian dissident and chess grandmaster Garry Kasparov drew upon long familiarity with that process when he tweeted: “The point of modern propaganda isn’t only to misinform or push an agenda. It is to exhaust your critical thinking, to annihilate truth.”

Google Groups

Munjoy Hill Historic District Designation

Diane Davison <dmdavison5@gmail.com> Dec 5, 2019 3:27 PM
Posted in group: **Planning Board**

Planning Board Members;

The Munjoy Hill neighborhood borders Portland's premier historic Olmsted park, the Eastern Promenade. The integrity of this beloved historic landmark and the long overdue historic district covenant for the architecture within this region of Portland go hand in hand.

NOW is the time to support the efforts and wisdom of our Historic Preservation Board's recommendation for protection of the historically and architecturally significant buildings in Portland's premier location; the Eastern Promenade.

I urge you to PLEASE preserve the dignity of Munjoy Hill by supporting inclusion of our neighborhood as one of Portland's historic districts.

Better late than never.

Respectfully,

Diane Davison
29 Morning Street
Munjoy Hill

Google Groups

Support for Munjoy Hill Historic District

Robin Whitten <robin@audiofilemagazine.com> Dec 5, 2019 3:44 PM
Posted in group: **Planning Board**

Good day,

I am a Portland and Munjoy Hill resident, at 23 Saint Lawrence Street, and have been a property owner at that location since 1976.
Twelve historic districts have been established in Portland, and now Munjoy Hill has the opportunity to have a Historic District that has been well-researched and thought out so that it suits the Munjoy Hill neighborhoods.

Great work has been done by the city, by Greater Portland Landmarks, and by the City's Historic Preservation Program.
I urge you to support their recommendations and establish the new Munjoy Hill Historic District.
Please support this proposal.

With regards,
Robin Whitten

Robin Whitten cell: 207-233-4865
23 Saint Lawrence St.| Portland, ME 04101 |

Google Groups

no Historic District needed

elizabeth <elizabethmiller1953@hotmail.com> Dec 5, 2019 3:53 PM
Posted in group: **Planning Board**

Munjoy Hill's designation as a Conservation Overlay District should be given time to be applied, tested and evaluated. What's the rush on a historic district? Where's the evidence that one is needed, that the Overlay District is insufficient?

Moreover, why not take the time to do due diligence? What will be the impact on rents? How does this square with the City's commitment to greater density?

Slow down! Evaluate.

Elizabeth Miller and David Body (property owners)
46 Waterville Street #3
Portland, ME 04101
878-8604

Google Groups

In Favor of the Munjoy Hill Historic District

Sarah Mills <scmills45@gmail.com> Dec 5, 2019 4:07 PM

Posted in group: **Planning Board**

For all the reasons many have put forward already, I want to add my name to those in favor of this designation. This is one of the most desirable neighborhoods to visit or live in for obvious reasons, and further changes to present buildings and sites would have only a negative impact on the current desirability of the area. I'm not someone who dislikes change - period - but the beauty of this area must be preserved for future generations' experience of true quality of life that now exists.

Sarah C. Mills, Portland

Google Groups

Planning Board Workshop on proposed Munjoy Hill Historic District and Individual Landmarks

Sally Oldham <oldhamseg@gmail.com> Dec 6, 2019 2:06 PM
Posted in group: **Planning Board**

Dear Jennifer: I sent this email to you yesterday but mistakenly put in the first paragraph “5” individual Landmarks instead of “6” individual Landmarks. There was a mistake in the Historic Prevation Board’s agenda from Wednesday, December 4. It listed 5 individual Landmarks in the opening paragraph but then listed 6 individual Landmarks in the text below. I had only looked at the first paragraph to get the number. Someone brought to my attention that there are 6 Landmarks proposed for designation so I wanted to change my comment to relfect my support for that number. Thank you very much, Sally

Dear Chair Dundon and Members of the Planning Board,

I would like to add my voice to those of others urging you to support the designation of the proposed Munjoy Hill Historic District and 6 individual Landmarks. The Historic Preservation Board conducted a very thorough review of these properties and proposals. City staff and Greater Portland Landmarks engaged in extensive efforts to educate and inform citizens about how the historic preservation program operates in Portland. The Historic Preservation Board gave unanimous support to these designations.

Portland is a fabulous city and one that I love. I find repeatedly when I ask people why they choose to live here, high on their list of attractive qualities is the historic character of central Portland. While we currently have 11 historic districts covering a number of areas on the peninsula and the islands, Munjoy Hill is one architecturally significant area which has not received such recognition.

There is a large contingent of my neighbors living on Munjoy Hill who strongly support designation of an historic district for a number of reasons. Maintaining the existing housing stock is a way to retain existing affordable housing. An historic district designation will allow for the addition of accessory dwelling units, will allow homeowners to paint their buildings whatever color they like, and will allow them to undertake routine maintenance tasks with no need for city review. City staff will afford advice to owners about energy efficiency upgrades they can undertake. In addition, historic districts have afforded good locations for new afforable housing in Portland. In fact, in the last 5 years 40% of the affordable housing built in Portland has been in our historic districts.

The development boom in Portland, taken together with zoning changes of the past few years, have put buildings and areas on Munjoy Hill at risk of substantial erosion and change. I am heartened by the surge of support to preserve and evolve the buildings within the proposed historic designation areas. Through such designations, these areas of Munjoy Hill can continue both to meet the needs of the residents and add to the vibrancy of this great city through maintaining its historic streetscapes and character.

Thank you for taking my comments into consideration as you review these proposals.

Sincerely,

Sally Oldham
118 Congress Street #202
Portland, ME 04101

Google Groups

Munjoy Hill Historic District

Leslie Hart <blesliehart@gmail.com> Dec 5, 2019 4:21 PM
Posted in group: **Planning Board**

As a resident of Munjoy Hill, I encourage the Planning Board to approve the proposed Historic District in order to preserve the unique character of this lovely neighborhood and encourage future good design within it.

Thank you,

Leslie Hart
215 Sheridan St.
Portland ME 04101
917.364.3682

Google Groups

Munjoy Hill

Betty Lorber <betty.lorber@gmail.com>
Dec 5, 2019 4:27 PM
Posted in group: **Planning Board**

To the Planning Board,

I am a resident of Munjoy Hill.
I am writing to ask that you approve the proposal
for the Munjoy Hill Historic District and Individual Landmark Designations.
Please protect the character of our neighborhood, it's diversity,
and historic importance.

Thank you,
Betty Lorber
225 Sheridan St, Portland, ME 04101

Google Groups

Historic designation for Munjoy Hill

Priscilla A. Harrison <twapriscilla@gmail.com> Dec 5, 2019 4:47 PM
Posted in group: **Planning Board**

I came “from away” 6 years ago so perhaps my thoughts matter less?
Still I will tell you how important it is to save history and preserve the looks of our town. It takes extra effort and planning, but it is worth every penny and every minute spent. Please carry on and approve the plan.

So sorry the old train station wasn’t saved.

Priscilla Harrison
Caoe Elizabeth.

Google Groups

Munjoy Hill preservation

Chris Stewart <stewart.christopher1@gmail.com> Dec 5, 2019 5:28 PM
Posted in group: **Planning Board**

I write you strongly in favor of a historic district on Munjoy Hill.
Having been born at Maine Medical Center, and having lived in Portland for most of my adult life, I've seen what was lost before Portland Landmarks helped focus our attention on the need to preserve our past.
That will effort continue with a historic district on Munjoy Hill.
Thank you for your work.
Sincerely,
Christopher Stewart

81North Street
Portland, Maine
04101

Google Groups

Munjoy Hill historic district

Susan Gillis <susan.a.gillis@icloud.com> Dec 5, 2019 6:24 PM
Posted in group: **Planning Board**

I have owned a three decker on Congress St for 40 years. I can assure you there is nothing historical about that building. An historic district designation is not going to bring affordable housing back to Munjoy Hill. Like all property located near water, the values have skyrocketed. This proposal is nothing more than an attempt to curtail the construction of buildings whose design some feel is offensive. At least be honest about it.

Susan Gillis, owner 48 Congress St

Sent from my iPhone

Google Groups

Historic District on Munjoy HIll

Carol Mccracken <ca10cken@aol.com> Dec 5, 2019 7:24 PM

Posted in group: **Planning Board**

To: Planning Board Members
From: Carol McCracken
Re: Historic District for Munjoy Hill

This is to inform you that I'm opposed to the designation of part of the HIll as a historic district. There is much concern generally in Portland about the lack of affordable housing. This would only exacerbate the situation because expenses incurred to meet the HP standards will price housing even more out of the hands of those who need it most. While I am a renter and not a home owner, I can only imagine and empathize with the angst of some who resent this intrusion and fear for the future of their housing costs.

Sincerely,
Carol McCracken
munjoyhillnews.com
ca10cken@aol.com

Google Groups

Munjoy Hill Conservation District

Oliver Murray <olivermurray@yahoo.com> Dec 5, 2019 9:12 PM
Posted in group: **Planning Board**

Chair Dundon and the Board:

I want to express my strong support for the Munjoy Hill Historic District that has been recommended by the Historic Preservation Board.

I have been a property owner on Munjoy Hill for 15 years. I first moved to an apartment on Munjoy Hill more than 20 years ago.

I have raised my family on Munjoy Hill, and my children have attended East End Community School on the Hill. Over the last few years it has been troubling to see incongruous, expensive condominiums take the place of modest single-family homes and affordable rental units. Families of my children's friends have been forced off the Hill and made to change schools when the buildings they rented were torn down and replaced by condominiums designed for the 1%. Many of these families have been recent immigrants. I feel the city is stronger when it is more diverse. The proposed Historic District would help to safeguard Munjoy Hill's rich history as a home for immigrants and other hard working families.

Contrary to what developers may argue, the statistics show that new construction on Munjoy Hill in the last few years has decreased the amount and availability of affordable housing. Instead, the vast majority of new construction has led to unaffordable rent and overcrowding in what was already one of the most densely populated areas of the city and the state.

Thank you for the opportunity to comment.

Oliver Murray

Google Groups

Munjoy Hill district

Patricia Erikson <whitecapconsulting@gmail.com> Dec 6, 2019 6:09 AM
Posted in group: **Planning Board**

Hello, I am a third generation Munjoy Hill resident and I support the creation of a Historic District. I am pro development and pro business but I firmly believe that historical districts protect the character if a city that gives it priceless and enduring economic value.
Tricia
--
Patricia Pierce Erikson, Ph.D.
Whitecap Consulting Maine
Consulting in Institutional Development, Communications, and Education
207-409-7960 (cell)
Peaks Island Press: News of Peaks Island Authors

Google Groups

Munjoy Hill

Ben Poirier <bpoirier@maine.rr.com> Dec 6, 2019 6:09 AM
Posted in group: **Planning Board**

To all concerned,
I favor the character preservation of the Munjoy Hill District. In so doing, please do not overlook the Owners, Look out to preserve and protect the Owners rights to use, develop and maintain their property values. A concerned onlooker.
Ben Poirier
Cape Elizabeth

Sent from my iPhone

Google Groups

Historic District

Susan Yandell <sueyandell@gmail.com> Dec 5, 2019 9:43 PM

Posted in group: **Planning and Urban Development**

Please pass Historic District proposal and save Munjoy Hill.
Thanks,Sue Yandell

Google Groups

Support the Munjoy Hill Historic District

Liz Hays <lizchays@gmail.com> Dec 6, 2019 6:30 AM
Posted in group: **Planning Board**

To the City of Portland Planning Board

My name is Liz Hays and I am an owner of a 1865 home on Munjoy Hill, in the proposed historic district.

I am strongly in favor of creating an historic district in this area. I feel it will help maintain the value of my home to have this continuity of an historic building atmosphere in the neighborhood. This historic atmosphere is one reason that draws people to live on Munjoy Hill, to frequent business and for tourists to take bus tours through its streets. Creating an historic district on Munjoy Hill benefits all of Portland.

Please consider voting yes on this is issue.

Liz Hays
107 North Street
Portland

Google Groups

Historic District

Anne Manganello <aemanganello@gmail.com> Dec 6, 2019 7:38 AM
Posted in group: **Planning Board**

I definitely oppose the installation of an Historic District. As parking for taxpaying homeowners has become such an ordeal especially in winter, I have proposed several plans to the Planning Board and was met with refusal siting a lot of rules that could of applied in 1875 when my home was built but do not and cannot apply today. Homes should accommodate people; not people should accommodate brick, wood and mortar. I have a huge maple tree next door that is ripping up the whole sidewalk. Someone is going to get hurt on the sidewalk before long.

At the December 4 meeting, I was invited by a land mark member to chat about my home. Again all he could say was the rules of 200 years ago apply.

Come on, get real!

Anne Manganello
84 Quebec Street
Portland, Maine 04101

207-772-8884

Google Groups

Munjoy Hill Historic District

jonathan wylie <jstileswylie@gmail.com> Dec 6, 2019 8:56 AM
Posted in group: **Planning and Urban Development**

Dear Sirs/Madams:

We urge you to support the creation, without changes, of the proposed Munjoy Hill Historic District.

As residents of the area included in the proposal, we believe that creating the District—and defining it expansively—is necessary both to preserve the Hill's intrinsic architectural and historical value, and to prevent the further degradation of the very features that have made it an increasingly desirable place to live.

Sincerely,

Jonathan Wylie
Gail Ringel
34 Lafayette Street

Google Groups

Please vote and approve the proposed Munjoy Hill Historic District and Individual Landmark Designations.

Martha Emerson (Gmail) <marthahhem@gmail.com> Dec 6, 2019 9:02 AM
Posted in group: **Planning Board**

Dear Planning Board,

I support the current designation of the proposed Munjoy Hill Historic District and Individual Landmark Designations at its workshop on Tuesday, December 10.

Regards,

Martha Emerson

340 Eastern Promenade, 247

Portland, ME 04101

Google Groups

Yes, MH historic district

KE Smith <kesmith328@gmail.com> Dec 6, 2019 9:02 AM
Posted in group: **Planning Board**

My house, at 80 Quebec Street, on the corner of Lafayette, is in the proposed historic district for Munjoy Hill. I am very much in favor. Since we bought the house in 2005, I have watched house after historic house be razed and replaced with soul-deadening boxes. Directly across the street from me, a quaint old house was demolished except for the foundation and replaced with a black (!) box. Diagonally, a monster, out of proportion to the neighborhood, now stands where a few years ago stood a garden. And I have only to walk down any street on the Hill to see other travesties. We now have an overlay that would have prevented the building of this and other giant houses with front-and-center parking areas and garages, but from what I observe, for current projects the overlay is being ignored. Our only hope to preserve the character of Munjoy Hill is an historic district.
K. E. Smith
80 Quebec Street

Sent from my iPad

Google Groups

Support for the Munjoy Hill Historic District

Ann Casady <ann@casadydesign.com> Dec 6, 2019 8:47 AM
Posted in group: **Planning Board**

To the Planning Borad:

We are residents of Munjoy Hill, one of the fastest growing residential areas in Portland. That is a testament to the neighborhood's charm and livable scale of housing. We believe that historic preservation is about keeping buildings alive, in active use, and responsive to the needs of the community. As this area is being developed so rapidly, it is critical to make sure new buildings be held to stricter design standards that fit within the existing neighborhood.

We believe that making Munjoy Hill a historic district will insure that the neighborhood remains livable, more affordable and respectful of our city's remarkable history.

Thank you,

Ann Casady & Peter Pitegoff
205 Sheridan Street
Portland, Maine

PC94

Peter L. Murray
104 North Street
Portland, Me 04101

December 6, 2019

Portland Planning Board
City Hall
Portland, Maine 04101

Re: Proposed Munjoy Hill Historic District

Dear Members of the Portland Planning Board:

Please add my voice to those of the many Portlanders who urge your prompt approval of the proposed Munjoy Hill Historic District.

Munjoy Hill represents a unique collection of 19th century working class homes, relatively undisturbed until recently, that contributes immensely to the amenity of the City of Portland and to our appreciation of its social and economic history. The many antique frame homes on the Hill have also been a robust source of economical housing for Portland urban residents.

In my view, the entire Hill should be included in a historic district. The area proposed by the Historic Preservation Board encompassing the Eastern Promenade, the Becket, Atlantic, St. Lawrence Street area, and North Street is the minimum that should be covered.

Historic districts have been very successful in other residential parts of the City. My own experience living for 30 years in the Western Prom Historic District convinces me of the value of systematically maintaining the historic character of the neighborhood in terms of property values, neighborhood stability and overall amenity.

Your approval of the District as proposed will be mean a great deal to maintaining the quality of Portland's architectural fabric and urban environment and the quality of life of its residents.

Sincerely,

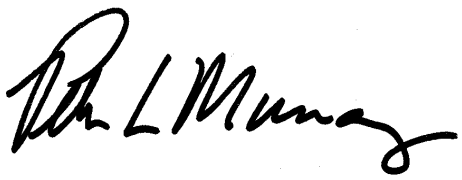

Peter L. Murray

Google Groups

Fwd: Comment on Munjoy Hill historic preservation

DMK <dmk@portlandmaine.gov> Dec 6, 2019 10:45 AM
Posted in group: **Planning and Urban Development**

---------- Forwarded message ---------
From: **Abbie McMillen** <abbiemcmillen@mac.com>
Date: Fri, Dec 6, 2019 at 10:30 AM
Subject: Comment on Munjoy Hill historic preservation
To: Deb Andrews <dga@portlandmaine.gov>, <cdg@portlandmaine.gov>, <dmk@portlandmaine.gov>, <cityclerk@portlandmaine.gov>, <bsr@portlandmaine.gov>

Hello all -
(not sure who to send this to, so you are all getting my comment)

I want you to know that I completely support the Munjoy Hill proposed historic preservation district.

For at least 10 years - I've lost count - we have owned a house on Vesper St. and may decide to retire there one day. The neighborhood is amazingly quiet for an urban area, and our neighbors are lovely people. Understandably we want to keep it the way it is.

I've been a planning board chairman in a small Maine town, and have served on many local boards and committees during my lifetime. I know that resisting pressure from developers is sometimes difficult.
But I would urge you to remember that their primary interest is in making a lot of money, not in maintaining the character of a place, however much they try to convince you otherwise.
And Munjoy Hill is a target area for those who want to make a lot of money without regard for history or aesthetic quality.

A recent case in point that drove home the problem to me: there is a new structure on Munjoy St. that backs up on the former Adams School property. Somehow, the developer was able to get a permit to have a 3 car garage-car/bicycle port affair on the ground floor. It is lit up brightly all night, and the lights are even on during the day. I suppose this is to discourage vagrants, but there are no doors on the garage and you are assaulted visually when you drive or walk by. It's a deplorable eyesore on street level, and above that there is just a featureless box. There are other examples where ground floor porches and charming entryways have been destroyed to make space for flat, sterile and unfriendly garage doors. And then there are the growing number of tall boxes that are totally out of character with their surroundings.

Please help those of us who are not out to make a killing in real estate, but just want to live here.

Sincerely,

Abbie McMillen

--
Desiree Kelly
Principal Administrative Officer
Planning and Urban Development Department
City of Portland
389 Congress Street, 4th Floor
Portland, Maine 04101
(207) 874-8720 (T)
(207) 756-8258 (F)

Google Groups

Munjoy Hill Historic District

Nancy Brain <nrbjcw@me.com> Dec 6, 2019 11:07 AM
Posted in group: **Planning Board**

Dear Members of the Planning Board,

I am writing to urge you to approve the nominations for the Munjoy Hill Historic District and 5 individual landmark buildings. Those of us who live on Munjoy Hill benefit greatly from the historic streetscapes and special characteristics of our neighborhood. We appreciate the City's efforts to research and document buildings in this neighborhood and to develop reasonable boundaries for an historic district designation here. We also appreciate the City's efforts to inform citizens about the proposed historic designations.

The City of Portland has a wonderful vibrancy that is greatly enhanced by our historic areas. I hope you will recommend these designations to the City Council.

Sincerely,

Nancy Brain
118 Congress Street, #303
Portland, ME 04101

Google Groups

Munjoy Hill Historic District

Carol J. De Tine AIA <carol@carriagehousestudio.com> Dec 6, 2019 11:27 AM
Posted in group: **Planning Board**

Dear Members of the Planning Board,

Please vote FOR the proposed Munjoy Hill Historic District, because

- It will ensure a balance between preserved older buildings and modern construction in historic areas.
- It will allow long-time residents of Munjoy Hill to stay in their homes, including perhaps by adding rental units (an accessory dwelling unit, a conversion within a dwelling, etc.) to supplement their income.
- It will preserve the character of the neighborhood that is why the Hill is thriving and attracting investment today.

I live in the West End Historic District. I am grateful every day that Portland chose to protect my neighborhood, long before I moved here. Munjoy Hill is worthy of the same protection.

Thank you for your careful consideration of this issue.

Carol De Tine
144 Vaughan St.

Google Groups

Munjoy Hill Historic District Designations.

Marianna Pratt <mariannapratt@hotmail.com> Dec 6, 2019 11:25 AM
Posted in group: **Planning Board**

To the Planning Board,

I am a resident of Munjoy Hill.
I am writing to ask that you approve the proposal
for the Munjoy Hill Historic District and Individual Landmark Designations.
Please protect the character of our neighborhood, it's diversity,
and historic importance.

Thank you very much.

Marianna Pratt
224 Sheridan St.
Portland, Maine 04101

Google Groups

Support for the Proposed Munjoy Hill Historic District

Hilary Bassett <hilarydbassett@gmail.com> Dec 6, 2019 11:06 AM
Posted in group: **Planning Board**

Dear Members of the Portland Planning Board:

I write to ask for your support for the proposed historic district for a portion of the Munjoy Hill neighborhood as recommended by the Historic Preservation Board. The recommendation is based on extensive research and reflects wide public discussion and input.

The proposed historic district designation would:

- Enact strategic goals of the 2017 Comprehensive Plan that protect historic resources, support sustainability, and reinforce the identity of our city;
- Provide a consistent review process for exterior changes that is based on almost 30 years of precedent, while being tailored specifically for this neighborhood;
- Encourage new development that is compatible in scale and character with the neighborhood, while also representative of our time in history;
- Provide a public forum for discussion of new designs;
- Continue to provide a range of housing options to encourage a diverse group of residents; and
- Support reusing, revitalizing, and repurposing existing building stock, consistent with sustainability goals.

I have lived on Munjoy Hill for the past 14 years and, like many fellow residents, have become increasingly aware of how fragile the character and human scale of the neighborhood is. I believe that historic district designation for a portion of Munjoy Hill will be a powerful tool that will enhance the neighborhood, maintain its character and livability, and support the goals the City seeks to accomplish in the Comprehensive Plan.

Thank you for your consideration.

Hilary Bassett
55 Morning Street, Apt 1-1
Portland

Planning Board Members,

I have proudly lived on Munjoy Hill for over seventy (70) years and I have seen many changes good and not so good. There is a minority outcry of the Hill becoming gentrified but when you walk the streets, it is evident that we have maintained our blue-collar appeal.
I am opposed to declaring this neighborhood another historic district with the same requirements and limitations as the other eleven (11) historic districts. I do not see a need for all the staff and volunteer board time already spent on this issue or the cost to increase staffing to address a larger number of historic districts. I suspect this additional responsibility will encumber the HPD effort to provide timely permitting. There are far more pressing needs to be attended to in this great City.
The Hill home owners have done a very good job of maintaining their historic homes and do not need further regulations that will impede their efforts.
I have restored and meticulously maintained an 1898 Queen Anne Victorian on the Eastern Promenade without needing to go through the extra steps and cost of a Historic review process. My home has been featured on HGTV and local and national magazines and used for catalog shoots and even a music video. over the years. I have hosted a fundraiser for Greater Portland Landmarks. I share this information not to brag or gloat but to stress that I do support maintaining our historic homes but I do not see a need to regulate the process. But that given I would encourage non- profit interests to provide free advice and guidance when requested by the homeowner.
For those who would like to hi lite their home as historic there is a placard program available from Greater Portland Landmarks.
If you choose to live in one of the City's historic districts that is one thing but to have it imposed on you by the HPB staff and unqualified neighbors another thing. It has the ring of an eminent domain taking.
All said and done I have attended and watched video of many presentations of the proposal and can only conclude is not a good move for Munjoy Hill or the City in general. Thank You for your consideration and all you do for the City.

Dan T. Haley, Jr.
140 Eastern Promenade
Portland, Maine 04101

Google Groups

Munjoy Hill Historic District Proposal

Betty Wuesthoff <jwuest@maine.rr.com> Dec 6, 2019 10:19 AM
Posted in group: **Planning Board**

Chairman Dundon and members Brandon Mazer, Bob Dunfey, David Eaton, David Silk, Austin Smith and Maggie Stanley:

We have lived in Maine since the early 1950's, worked and/or lived in Portland since the 1960's and done both on Munjoy Hill since the 90's.

Our Munjoy Hill neighborhood, with its many wooden two apartment and "triple-decker" affordable rental units, architectural gems reflecting Colonial Revival, Queen Anne, Italianate, as well as other recognized styles, lend a valuable "sense of place" to the Hill in danger of being lost with the recent intrusion of tall, boxy, sterile Soviet style concrete structures with units affordable only by those who can pay $500,000 - $1,000,000- for an apartment.

Please treat the Hill as you have the 11 Historic Districts in Portland and vote to adopt the recommendation of the Historic Preservation Board.

Thank you.

John and Betty Wuesthoff
11 Morning St.
Portland, Maine

Google Groups

Munjoy Hill historic district

Katy Brewer <katycasalebrewer@yahoo.com> Dec 6, 2019 10:19 AM
Posted in group: **Planning Board**

Planning board members,
I grew up on Munjoy Hill and always appreciated the houses around me including the one I grew up in. They have character, detail and a distinctiveness about them. This NEEDS to be protected! What is happening to these homes is unacceptable. Please keep Munjoy Hill from being demolished and eradicated because of greed and lack of forethought. - longtime resident and admirer of Munjoy Hill

Sent from my iPhone

Google Groups

Munjoy Hill Historic District

Nancy Guimond <rougelily@hotmail.com> Dec 6, 2019 9:53 AM
Posted in group: **Planning Board**

I support the Munjoy Hill Historic District. The homes on the Hill are a very important part of Portland's history because this city was built by the labors that built lived in these homes for generations. These hard working immigrants and craftsmen came to this country with little to nothing and through their hard through their hard work they made this city prosper. They rebuilt the city after the great fire, they brought great wealth to this city by their back breaking work on the waterfront, they started small businesses that grew to large businesses and more important they created a neighborhood where families had each other's back because they had little else.
Thank you, Sandra Flanagan
13 Waterville Street

PC104

93 High Street
Portland, ME 04101
207.774-.561
portlandlandmarks.org

Greater Portland Landmarks

Historic character enriches our lives

December 6, 2019

Dear Chair Dundon and members of the Planning Board:

Greater Portland Landmarks supports the proposed designation of the Munjoy Hill Historic District and six individual local landmark designations. Munjoy Hill's historic buildings are significant features of the neighborhood's streetscapes and make the area a desirable and authentic place to live. It is essential to preserve the character defining buildings that reflect the neighborhood's development over a broad period of time and the role these buildings' residents played in the social and cultural history of the neighborhood, before more of the Hill's historic identity is lost. Through this city's commitment to historic preservation we believe Portland has been successful at achieving a balance between old and new, and the establishment of the Munjoy Hill Historic District will ensure that balance continues.

The inherent flexibility in the historic preservation ordinance has permitted alterations and new construction at a variety of scales in the city's local historic districts. These new additions within the various districts have enhanced our city's streetscapes while maintaining the essential historic character of these areas and also accommodating new residential and commercial growth. Hundreds of new housing units, including **more than 325 units of affordable housing**, have been built or permitted in the last several years in individually designated buildings and in the West End, Parkside, India Street, and Congress Street Local Historic Districts.

Historic preservation is one tool that helps our city be more sustainable. Preservation and reuse of historic buildings reduces resource and material consumption, puts less waste in landfills, and consumes less energy than demolishing buildings and constructing new ones. In addition, the preservation program has approved environmentally friendly building systems like heat pumps and solar panels, which help to achieve the city's sustainability goals.

- **Historic Preservation is about keeping buildings alive, in active use, and responsive to the needs of the community.** To best accomplish this, zoning and building regulations are flexible and responsive to change even as they work to preserve what is special about each building.

- **Local districts allow density without demolitions of historic homes.** Accessory dwelling units, additions, and new housing units within existing houses, are all ways that a historic district can offer diverse housing options, without destroying the history, beauty and urban tree canopy of these neighborhoods.

- **Local districts encourage good design.** Better design produces new buildings and additions that fit within the existing neighborhood. Design review encourages a more innovative use of materials, and greater balance between old and new, all of which are shown to occur more often within designated districts than *non*-designated ones.

- **Local districts protect a property owner's investment.** Regulations are intended to prevent the demolition or inappropriate alteration of historic buildings, and thus, the fabric of the historic district that gives properties their value. Local districts offer stability and predictability for residents and those considering investing in the community.

Greater Portland Landmarks was founded on the belief that Portland's future is brighter if it builds upon the rich social, cultural, and architectural character of its past. Historic Preservation is not about freezing any community in time. Rather, historic preservation looks to preserve enough of the built environment that establishes a city or a neighborhood's sense of place while accommodating new development and the needs of contemporary life.

Thank you for the opportunity to comment.



Sarah Hansen
Executive Director

Google Groups

Munjoy Hill

tica douglas <tica1529@gmail.com>
Dec 6, 2019 11:35 AM
Posted in group: **Planning Board**

Dear Members of the Planning Board:

I live at 11 Munjoy St., an 1855 house built by “a ship’s joiner,” within the proposed district and deemed “contributing.” I am very much in favor of the proposed historic district. Munjoy Hill, more than any other neighborhood, is “emblematic” of Portland- it is unique in being visible from most approaches by land or sea as a single entity- a Hill, with miscellaneous 19th century rooflines that together comprise an iconic image. It would be tragic to see it degraded anymore than it already has been by over-sized buildings where the lights are mostly not on.

Tica Douglas

Google Groups

Comments on Proposed Munjoy Hill Historic District

Lori Rounds <lori.j.rounds@gmail.com> Dec 6, 2019 11:44 AM
Posted in group: **Planning Board**

To the Planning Board:

I am opposed to designating portions of Munjoy Hill as an Historic District.

The Munjoy Hill Conservation Overlay District was implemented in June 2018 to enact stricter demolition, design and dimensional requirements on construction activities on the Hill. To-date there has been no analysis published by the City on the impact of the new rules on demolitions or the change in the number and type of housing units on the Hill. Realistically, 18 months is a brief time to generate significant data to enable a thorough analysis although new information is surely available. Additionally, there has been no data presented by the City on the impact of current Portland Historic Districts on number and type of housing units; cost of home ownership including costs of home maintenance and renovations in an HD; time required for additional Historic Preservation Dept. review of requested property changes; rental costs; or other potential impacts.

Furthermore, there is mis-information on Historic Districts and the proposed Munjoy Hill HD being promulgated as fact. The Press Herald article regarding the proposed Munjoy Hill Historic District published by Craig Anderson on November 30th erroneously states that "The proposed rules would be less strict than in the city's 11 existing historic districts….Special permission would not be required to make minor aesthetic changes such as repainting facades or replacing windows, as in some other protected areas." As verified by Deb Andrews of the Historic Preservation Department, all HD's are subject to the same restrictive rules. Although painting of facades is not regulated under HD rules, the rules do include the requirement for special review of modifications to facades such as replacing windows and siding. The costs of complying with Historic District maintenance and renovation requirements can be significant and out of reach for many Munjoy Hill homeowners. For example, a homeowner on Emerson Street who spoke at the District 1 meeting on December 4th stated that the cost to re-side her modest house (which sits just outside the proposed MH HD) by replacing existing wood siding with "in kind" wood siding as required by HD rules was quoted at $25,000. Cement-board siding was quoted at $18,000 and vinyl siding was the least expensive option at $10,000 or less.

I am requesting that the Planning Board conduct data-based discussions of the current Munjoy Hill Conservation Overlay District, and of existing Portland historic districts. The subjective comments submitted by proponents of the Munjoy Hill Historic District about "ugly boxy designs, greedy developers, rampant demolitions, stealing light and air, ruining the character of the neighborhood" have pushed aside the need for objectivity and an evaluation of facts.

I support reasonable zoning that respects the rights of property owners and encourages responsible renovations, development and new construction that enhances the neighborhood. Munjoy Hill property owners and residents, including renters, deserve to know the facts (rather than opinions) regarding implementation of more restrictive and costly Historic District rules on the neighborhood.

Regards,
Lori Rounds
47 Monument Street

Google Groups

Munjoy Hill Historic District Designation

Mary Casale <dirtgirl1@aol.com> Dec 6, 2019 11:49 AM
Posted in group: **Planning Board**

Members of the Planning Board,
Let me tell you about my Munjoy Hill , and why this Historic designation as proposed is so necessary .
Some background first. I am the fourth generation of my family to live on the Hill, hailing from a large family of Irish immigrants . I love where I live and always have . We bought our home over 40 years ago, raised our family here alongside many multigenerational neighbors. My mother was able to spend the last years of her life sitting on our porch looking over the water and living in her childhood neighborhood.
In 1989 Landmarks was initiating the designation of Historic Districts in West End Parkside and Munjoy Hill. The consensus of the residents on the Hill at that time was to leave our neighborhood without restrictions and keep it affordable.
Well what a huge mistake we made !
What we didn't do 30 Years ago needs to happen now .
Our neighborhood became ripe for the picking 15 years ago first with the allowance of condo conversions, then the allowance of decrease in building lot size, then the allowance of diminished parking requirements, then the allowances of infill developments, then the R6 zone changes of 2015 which created a feeding frenzy of greed .
So I ask you in all sincerity to please accept the Historic District Designation with Landmark additions as presented . We need to save what is remaining of this wonderful place to live for future generations.
Thank you
Mary Westort Casale
39 Waterville St.

Sent from my iPad

Google Groups

Munjoy Hill Historic District

e w <eenebw@hotmail.com> Dec 6, 2019 11:52 AM

Posted in group: **Planning Board**

AS long-term owners of two three unit buildings on Munjoy Hill, we fully support a Historic District. Change is a good thing, but on Munjoy hill change is translating into tearing down classic 1800 era buildings to build modern “trendy” boxes.

It is fully understood that several developers and high value property owners are against a district and the reason is obvious, money. In our judgements any additional restrictions placed on our properties to be in compliance with a district are well worth the alternative of more demo and mass box building. As a landlord, I find it amusing when I hear people say you give up rights etc.. to what is your land. In reality, property owners do not have full control of their land. We never have.

Please consider a district for Munjoy Hill. The majority of residents I have spoken to are in favor of a district. Those that aren’t sure are usually a little scared because of the horror stories they hear relayed which are usually incorrect, like paint color. The reality is Portland already has several districts and there is not a lot of displeasure amongst residents of those districts that I am aware of. Displeasure amongst developers.. YES.

Thanks

Enoch and Gail Wenstrom

88/83 Beckett St

Google Groups

Historic Preservation District on Munjoy Hill

Pamela Day <pday2304@gmail.com> Dec 6, 2019 12:00 PM
Posted in group: **Planning Board**

Portland Planning Board:

We are writing to express our strong support for the proposed Munjoy Hill Historic District. The proposed district represents a much needed opportunity to stench the flow of development that has reduced the number of affordable housing units on the hill, distorted the nature of hill neighborhoods through the expansion of high-end properties, and dwarfed the hill's historic homes with box-like condo buildings that diminish light and greenspace.

As homeowners on the hill for 14 years, we view the proposed district as an important tool for preserving the fabric of a historic Portland neighborhood while providing clear guidelines for planned growth. These protections are provided to eleven other neighborhoods in Portland. Munjoy Hill deserves the same.

Pamela Day & Michael Petit

25 Waterville Street
Portland
207-461-1461

Google Groups

Opposition to proposed Historic District

Travis Agaman <index207@gmail.com> Dec 6, 2019 12:38 PM
Posted in group: **Planning Board**

Hello,
I am a resident of the East End of Portland. I am writing today to communicate my firm opposition to the proposed historic district overlay being forced on Munjoy Hill because I have been told by other residents that our voices are not being listened to and that "the Planning Board has not heard any dissenting voices". I have attended most of the informational meetings at the East End school and City Hall about the historic district and at no point did a single individual promoting the overlay convince me that it is good, necessary, or that it will not harm current and future residents of Munjoy Hill. I feel like I could write multiple pages about this subject but I will try to make my arguments as succinct as possible.

-The historic district will absolutely cause financial harm to residents, that is known. The current lack of historic district hurts absolutely no one. How do you justify that? There are people that fled the West End of Portland to the East End when that historic district went into effect, their testimony to the financial harm it caused them is much stronger and more compelling than the promises and hand-waving of the Historical Society.

-Implementing a historic district will destroy the community on the hill. You cannot have a sense of community when some elite members of the neighborhood are forcing financial burdens on you to appease their aesthetic views. The cost to reside our house on the hill will increase by an additional $17,000 under the historic district. That is two thirds of my income for an entire year. People in my situation will never forgive the people that callously push for the historic district or the city council members that vote for it.

-Proponents of the regulations say it will help tourism. Tourists do not come to Portland to look at bland, questionably historic, cookie cutter three story apartment buildings. They come for the restaurants and the people. Tourists do not come to the East End to look at a handful of oldish buildings tucked away on back streets, they come here for the dining and the natural beauty of the Promenade.

-As one of the youngest persons at those meetings - I can assure you that future generations do not want this historic district. People arguing that the historic district is preserving the look and the feel of the hill for young people is so tragically misguided and blind. Young people want affordable and abundant housing, not windows cut to certain historical measurements.

-The included ban on solar panels (the wording is a ban no matter how supporters phrase it) is unconscionable. At at time when our environment is being destroyed by the fossil fuel industries it is unethical to place bans upon the incredible energy resource that solar panels represent. This alone should be enough reason to reject the proposal. Thank you for your time reading my letter and I hope that you will support the rejection of this harmful historic district legislation.

Travis Agaman 8 Emerson Street Portland

Google Groups

Munjoy Hill Historic District

aglassberg733@earthlink.net <aglassberg733@earthlink.net> Dec 6, 2019 2:01 PM
Posted in group: **Planning Board**

I strongly urge you to approve the Munjoy Hill Historic District. This has been thoroughly reviewed, and delayed long enough. It should be approved as recommended.

Andrew Glassberg

340 Eastern Promenade #125

aglassberg733@earthlink.net

Google Groups

Munjoy Hill Historic District

Jill Nixon <jillnixon89@gmail.com> Dec 6, 2019 12:43 PM
Posted in group: **Planning Board**

Dear Members of the Planning Board

It is our understanding the Historic Preservation Board has approved the nominations for the Munjoy Hill Historic District and 5 individual landmark buildings. We do hope you will recommend these designations to the City Council as we believe the historic streetscapes are an asset to the residents of Munjoy HIll, to the City of Portland, and an added attraction to the visitors we encourage to come to Portland. We spent over 50 years living near Alexandria Virginia and know how very popular the historic district is to everyone.

Jill & Larry Nixon
Unit 402
118 Congress Street
Portland, ME 04101

Sent from my iPad

Google Groups

Resident in favor of Munjoy Hill Historic District

Rob Whitten <rob@whittenarchitects.com> Dec 6, 2019 1:27 PM
Posted in group: **Planning Board**

Dear Chairperson and Members of the Portland Planning Board;

I am writing in support of the proposed Munjoy Hill Historic District. My wife and I purchased a condemned home at 23 St. Lawrence Street in September 1976 and we made renovations and repairs and became Hill residents in 1977.

I'm an architect who specializes in residential design with a nine person office in Portland's Old Port.

We have spent the last 42 years appreciating the residential character and scale of the Munjoy Hill community.

Munjoy Hill is a unique and distinct neighborhood. It is a "fabric" of livable, walkable, furnished, complete streets. It is a pedestrian, bicycle, and low speed, car friendly community with green space and plenty of sunlight, views, and fresh air, thanks to the 1 1/2 to 2 story family environment with local, walkable schools, local employment, community services, and a sixty acre waterfront park.

The challenge is to protect and to maintain modest, affordable housing that developed from 1850 to 1950 without a unique architectural style or character; as compared to the cohesive, stylistically consistent West End or Old Port that developed from 1866 (post fire) to 1920.

The recent change and disruption to the housing patterns on the Hill can be attributed to the unintended consequence of the 2015 amendments to the R-6 to foster affordable in-fill housing, and the national trend of renewed interest in city living. Sadly, the recent, post 2015, box-like condominium developments have been designed and built to meet the quantitative R-6 standards of maximum height, maximum lot coverage, minimum green space, and minimum lot sets backs. The qualitative infill standards of mass, scale, and neighborhood context have been ignored.

The result is the short term gain of non-affordable homes -often dark in the winter months, and the long term loss of an affordable, historic community.

The Historic District Board understands and supports the fabric of the Hill as demonstrated I n the proposed, Munjoy Hill Historic District; particularly when compared to the recent developments on Munjoy Hill approved by the Planning Board.

The Planning Board has a full schedule and many interests to serve, the Munjoy Hill Historic District will be an asset and assure long term decisions that are in the best interests of Munjoy Hill and the City of Portland. Thank you.

Sincerely,

Rob Whitten
23 St. Lawrence Street, Portland
Whitten Architects
37 Silver Street, Portland.
Sent from my iPad

Google Groups

Munjoy Hill , Historic

Paul Haley <phalestones@icloud.com> Dec 6, 2019 2:22 PM
Posted in group: **Planning Board**

To Whom it may Concern,
My LLC Halestones owns 62 Waterville Street.
I was born and raised on “The Hill”as was my Father and his Father.
I’m against the “Historic Designation”
I’m sure my Father, Daniel T. Haley Sr. would agree with me that implementing this regulation would take away owners rights.

Respectfully, Paul Haley

Google Groups

Letter in support of Munjoy Hill Historic District

JEAN MC MANAMY <ninimaine@aol.com> Dec 6, 2019 2:49 PM
Posted in group: **Planning Board**

Dear Chair Dundon and members of the Planning Board:

I am writing to ask you to support the nomination of the Munjoy Hill Historic District. A neighborhood is not just a collection of buildings. The value of those buildings lies in the human activity they shelter and support. Munjoy Hill has a long history in the city, dating from its earliest settlements, and retains much of the built and social fabric of the thriving working and middle class neighborhood it has long been. Destruction of the built fabric by demolition and its replacement by high end homes is having a noticeable and deleterious effect on the stability of the neighborhood, as well as its quality of life and historic cultural value.

Preserving the existing building fabric is the best way to preserve the opportunity for our diverse population to continue to live on the Hill. Side benefits are more sustainable housing, and stability for tenants who really don't have any place to go in Portland if they are forced out by redevelopment. It is regrettable that current policies have created an environment where building new affordable housing is too expensive on Portland's Peninsula, but we must preserve what we can. Change is inevitable, but the pace of change can be moderated to give people time to adapt. The HIstoric District is designed to do just that.

Nini McManamy
10 Willis Street
Portland

Sent from my iPad

Google Groups

Context Re the question of HD on Munjoy Hill

Carle Henry <cdhenry3@yahoo.com> Dec 6, 2019 2:48 PM

Posted in group: **Planning Board**

Happy Friday everyone.

I hope the attached doc gives you some context about the flawed process leading up to the question of adding a 12th Historic District on Munjoy Hill.

Thank you,

Carle Henry

December 6, 2019

Portland City Council,

As the question of a 12th Historic District works its way through the City process, I wanted to share a few facts for your consideration. While I am opposed to such a designation, this letter will not highlight the many reasons why it is wrong for our city. This letter is simply to give you all some context as to what has happened in the past couple of years on this topic.

Once the Planning Board has completed their work, I will send additional information along with others who oppose the 12th district residents to articulate why a 12th district on Munjoy Hill is wrong and what reasonable alternatives exist.

The Chronology:

1. In 2017-18, moratoriums were put into place and an eventual Conservation Overlay
    - The Overlay restrictions and requirements changed dramatically after it was passed from the Planning Board. It has had many unintended consequences and is not seen as positive by those supporting or those against HD on the Hill

2. Also in 2018, Jeff Levine (while head of planning) committed that the City would survey the Hill residents about this topic during a public meeting on the Hill. He stated that 'we won't do it if you don't want it.'
    - The City <u>never</u> surveyed yet has invested time and energy from Staff, HPB, Planning, etc. without any broad support for this direction

3. In late 2018, the Munjoy Hill Neighborhood Organization (MHNO) donated $5000.00 to fund the HPB's Munjoy Hill Inventory Report without a MHNO Board of Director vote or Member approval. In potential violation of their non-profit status, it simply took funds for advocacy reasons.

    - The report published in April of 2018 concluded that 85% of the 408 buildings assessed were deemed historically "Contributing." (Note: if we had an issue maintaining our heritage, the % contributing would be much smaller)
    - Greater Portland Landmarks funded the other 1/3 of the report

4. In July 2019, the Munjoy Hill Neighborhood Organization unanimously voted to **<u>NOT</u>** survey its paying members or any neighbor on the Hill re Historic Designation/Districting but to simply advocate for its immediate passage (and expansion)

- Note: Since the original district recommendation, the historic district has already expanded twice as a result of residents requesting other homes/streets/sections be added
- The current president of the MHNO is a Restoration Business owner and the other officers are long time Soul of Portland advocates who wasted City $ to push a referendum to save their views on Fore Street
- The previous MHNO President in early 2019 cited Greater Portland Landmarks and Deb Andrews as applying pressure to not survey the residents

5. In December of 2019, during the 1st District Annual Meeting hosted by Belinda Ray, we learned that there has been no evaluation of the 2018 Conservation Overlay despite earlier requests and its unintended consequences on the hill.
    - Both Councilor and CG, interim city planner, had 0 stats on the effect or impact of a nearly 2 year old change to our neighborhood. Two questions: Why should Conservation Overlay data analysis be tied to a new 12th HD? The City should have already done this. Further, why push forward with a new HD when there is no data on imposed regulations from 1.5-2 years ago?
    - In an Aug/Sept meeting, the councilor referred to the possible district as a 'two-for'….As she explained, adding a historic district to the hill after the conversation overlay was a natural next step. Tuck O'Brien, previous Planning vice chair, calls this 'ridiculous'

6. In a December 2019, PPH article, the reporter incorrectly stated that the possible MH Historic District would be 'less restrictive' than other HDs in our City.
    - Proven wrong by Deb Andrews (I reached out to Deb to verify), the PPH is issuing an online correction today. Their source of the erroneous misinformation was Jay Norris, past MHNO president who provided the funds to the HPB for the City's Inventory Study

As stated in my opening, this doc is not to provide you the arguments and facts that would lead you to not support this direction. However, context helps and puts a spotlight on the many issues with how we have gotten to this point and the unfortunate abuse of our tax dollars & misuse of talented City personnel.

Thank you,

Carle Henry

Memorandum
Planning and Urban Development Department
Planning Division

To: Sean Dundon, Chair and Members of the Portland Planning Board
From: Andrew Tufts, Planner
Date: December 6, 2019
Re: Development, 275 Presumpscot St, Waldron Reality, LLC
Project #: PL-000832-2019 CBL: 421 A006
Meeting: December 10, 2019



Figure 1: Parcel outline - Source: CONNECTexplorer

I. INTRODUCTION

Waldron Reality, LLC has submitted a Level III Site Plan application for the development of a new 34,000 square foot automotive storage building. The subject property is a 77,420 square foot parcel at 275 Presumpscot Street in the IM Industrial Zone. The neighborhood is mostly industrial, with some residential and commercial spaces. The property is adjacent to an existing automotive storage facility, the Portland Motor Club, and will operate under the same ownership.

Applicant: Waldron Reality, LLC

Consultants: Tom Greer, P.E., (Walsh Engineering Associates, Inc.)) David Matero, PA (David Matero Architects)) Rex Croteau (Titcomb Associates (Surveying))

II. REQUIRED REVIEWS

Waiver Requests	*Applicable Standards*
The applicant seeks a waiver in support of the proposed 19 parking spaces. Staff Comments: The City's Traffic Engineer supports a waiver from the City's Technical Standards for the proposed number of parking spaces.	Chapter 14, Section 547: For that part of every business, manufacturing, and industrial building not catering to retail trade and with floor area over three thousand (3,000) square feet: One (1) parking space for each one thousand (1,000) square feet of floor area, or major fraction thereof.
Review	*Applicable Standards*
Site Plan	*Section 14-526*

III. PROJECT DATA

Existing Zoning	IM industrial zone
Existing Use	*Surface parking/ storage lot*
Proposed Use	*2-story, 52,000 square foot storage building*
Parcel Size	77,420 SF

	Existing	*Proposed*	*Net Change*
Building Footprint	140 SF	34,000 SF	+ 33,860 SF
Building Floor Area	140 SF	52,000 SF	+ 51,860 SF
Impervious Surface Area	59,079 SF	59,980 SF	+ 901 SF
Parking Spaces	115	19	- 96
Bicycle Parking Spaces	0	4	+ 4



Figure 2: Birdseye Perspective - Source: CONNNECTExplorer

IV. EXISTING CONDITIONS

The development site is located at 275 Presumpscot Street in Portland's East Deering neighborhood. It is developed with an existing gravel surface parking lot used as storage for various types of vehicles. There is also a 140 square foot shed located in the front corner of the site. The site has been mostly cleared of stored vehicles in anticipation of redevelopment. Currently, the Portland Motor Club operates on the adjacent parcel to the south. TALUS Corp. occupies the building to the north. A discontinued rail-line runs to the east of the property, with Interstate-295 just further to the east.

While a sidewalk exists on the opposite side of Presumpscot Street, there is no existing sidewalk on the project site, or either adjacent property. There are no street trees along the Presumpscot Street frontage, resulting in a long vacant and unsheltered span.

Titcomb Associates completed a boundary and topographic survey of the site in 2019. There is one existing easement identified, a twenty-five-foot right of way, which pertains to the driveway on the northern property boundary. The easement is with the Canadian National Railway Company.



Figure 3: Portland Motor Club - Source: PAC

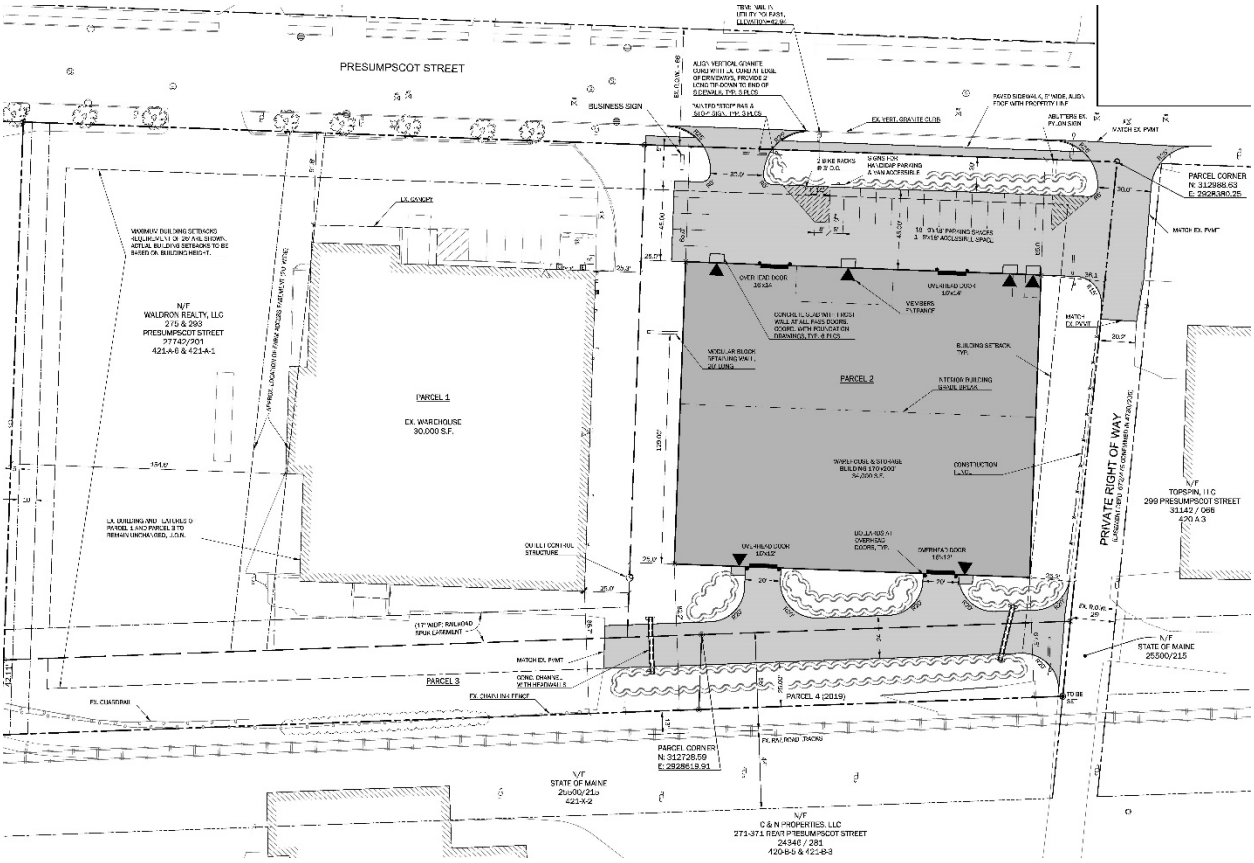

Figure 4: Proposed Site Plan - Source: Walsh Engineering Associates

V. PROPOSED DEVELOPMENT

The proposed development is a two-story vehicle storage facility approximately 52,000 square-feet in size. To facilitate this development, an existing shed and fence will be removed. The building would include a top floor of 34,000 square-feet accessed from Presumpscot Street, and a lower floor of 17,000 square-feet, which would be accessed from a private right-of-way on the north. The access in the back will connect to the adjacent building owned by Waldron Reality LLC. The building would be used to store vehicles, including cars, boats, and RV's. It would operate under the Portland Motor Club banner.

A gravel wetland would be constructed between the existing and proposed buildings to improve stormwater quality and reduce peak flow rates. The parking for the facility is located at the front of the proposed building. The 19 spaces provided would be for members of the club to park and visit their vehicles. The applicant is seeking a waiver to allow the proposed 19 spaces, vs the 57 required by the site plan standards. A bituminous sidewalk is proposed along Presumpscot Street in the site plan, as well as five Sugar Maple street trees. Two bike racks would be located at the front of the proposed building.

VI. PUBLIC COMMENT AND NEIGHBORHOOD MEETING

The neighborhood meeting was held November 6, 2019, at 6:00 PM, at the Portland Motor Club building. Two neighbors attended. Tom Greer gave an overview of the project and addressed questions pertaining to the side street and its use. The audience was in favor of the project.

VII. RIGHT, TITLE, & INTEREST AND FINANCIAL & TECHNICAL CAPACITY

The owner of the property is Presumpscot Street Holdings, LLC. The applicant provided a copy of the warranty deed, recorded at the Cumberland County Registry of Deeds in book 26029 page 305, which demonstrates their right, title and interest in the property.

The Applicant provided a letter from Ameriprise Financial indicating that, between the applicant's available funds and bank financing, the applicant has sufficient financial capacity to complete the proposed project.

IX. ZONING ANALYSIS

Dimensional requirements for this project are dictated by the IM industrial zone.

Zoning Requirements	IM	Provided
Minimum Street Frontage	60 ft	265.42 ft
Front Yard	Minimum: 25 ft	65 ft
Rear Yard	25 ft	67.5 ft
Yard Right	25 ft	25 ft
Yard Left	25 ft	25.2 ft
Maximum Lot Coverage	75%	44%
Maximum Structure Height	75 ft	46.4 ft
Parking	57 spaces	19 spaces
Bicycle Parking	2 spaces per every 10 vehicle parking spaces	4 spaces per every 10 spaces
Pavement Setback	10 ft	19.7 ft

IX. DEVELOPMENT REVIEW

A. SITE PLAN SUBMISSION REQUIREMENTS (Section 14-527)

Any waivers granted must be recorded at the Registry of Deeds within two years of a Planning Board decision.

B. SITE PLAN STANDARDS (Section 14-526)

The proposed development has been reviewed by staff for conformance with the relevant review standards of Portland's site plan ordinance and applicable regulations. Staff comments are listed below.

1. *Transportation Standards*

   a. Impact on Surrounding Street Systems and Access and Circulation

      The proposed development has access from Presumpscot Street and a private right-of-way to the north side of the parcel. These are connected with a drive thru parking lot. This access allows tractor trailer access to the site for the loading and unloading of vehicles that are stored on site. The parking for the facility is located at the front.

      Andrew Tufts, City Planner, has provided the following comment:

      - *Staff are concerned about the lack of pedestrian connectivity between the two surface parking lots in the front of the buildings. This should be addressed and shown in revised plans.*

      Applicant's response:

      - *The connection between the two buildings at the front is not possible given the grade differences. It is not part of our plan.*

   b. Sidewalks

      Bituminous sidewalks along Presumpscot Street have been added to the site plan.

   c. Public Transit Access

      The public transit requirements do not apply to this project. No METRO lines run on Presumpscot Street.

   d. Parking

      The site plan standards require that the proposed development provide approximately 57 spaces. The applicant is seeking a waiver to allow the proposed 19 spaces. The 19 spaces provide parking for members of the Portland Motor Club to park and visit their vehicles. Based on the experience with the adjacent facility, the applicant feels this is adequate parking.

      Chapter 14, Section 547 states:

      - *For that part of every business, manufacturing, and industrial building not catering to retail trade and with floor area over three thousand (3,000) square feet: One (1) parking space for each one thousand (1,000) square feet of floor area, or major fraction thereof.*

   e. Bicycle Parking

      The project requires 2 bicycle parking spaces for every 10 vehicle parking spaces, or 4 spaces. Bicycle parking would be provided at 2 bike hitches (2 spaces each) located on the pavement in front of the proposed building.

2. Environmental Quality Standards

a. Preservation of Significant Natural Features

There are no known significant natural features on the site.

b. Landscaping and Landscape Preservation

A landscaping plan, prepared by Walsh Engineering Associates, was submitted as part of the application. Five street trees would be added to match the existing street trees along the adjacent site. New trees would also be added along the right-of-way on the south edge of the proposed building. Native plantings would be included in the gravel wetland stormwater system shared by the two sites.

c. Water Quality, Storm Water Management and Erosion Control

The existing site contains approximately 59,079 square feet of impervious surface. Redevelopment of the project site would result in an increase of approximately 901 square feet of impervious area, to a total of 59,980 square feet.

In accordance with the Maine DEP Chapter 500 Regulations and Section 5 of the City's Technical Manual, the Applicant is required to meet the Basic, General, and Flooding Standards for Stormwater Management. An erosion and sedimentation control plan and details have been provided to meet the Basic Standards. The Applicant is providing a gravel wetland to meet the General and Flooding Standards. This will provide detention for peak flows and water quality enhancement. The Stormwater Management Report addresses this issue.

3. Public Infrastructure and Community Safety Standards

a. Public Safety and Fire Prevention

This building will have a fire suppression system in accordance with NFPA Standards. It has access to 3 sides of the building for firefighting access.

Mike Thompson, Division Chief of the Fire Prevention and Community Outreach Division, has reviewed the submitted plans and found them to be acceptable, noting the following points:

- *Final building site plans are required to be submitted to the City E911 Addressing Officer for an address for this building*
- *The new address shall be clearly marked on the street side of the building*
- *Once assigned an address by the E911 Addressing Officer, that address should be used moving forward in the plans review/ permitting and inspections process.*

b. Availability and Adequate Capacity of Public Utilities

The project would be served by Central Maine Power, the Portland Water District, City Department of Public Works.

Overhead electrical and telecommunications utilities exist along Presumpscot Street.

A letter from Portland Water District on the ability to serve has been requested.

A letter from Public Works has been requested for wastewater capacity. It will be connected to the public sewer in Presumpscot Street.

4. Site Design Standards

a. Snow and Ice Loading

The proposed building would have a flat roof. Accumulated snow and ice would not fall onto adjacent properties or public ways.

Lauren Swett, P.E. with Woodard and Curran Engineering, has reviewed the erosion and sediment control plans and details, and inspection and maintenance requirements and offers the following comment:

- *The Applicant should consider the impact of some of their snow storage areas on internal site drainage. In particular, we suggest that the southwest corner of the parking lot. near the Presumpscot Street entrance should not be used as snow storage as this would block stormwater runoff from the parking lot into the gravel wetland.*

Applicant's response:

- *The snow storage areas have been revised.*

b. View Corridors

This site is not within a Protected View Corridor as per the "View Corridor Protection Plan" approved by the Portland City Council in 2001.

c. Historic Resources

Does not apply.

d. Exterior Lighting

The applicant submitted a lighting and photometric plan, which was reviewed by staff and deemed acceptable.

e. Noise and Vibration

Evidence that the mechanicals will meet the zoning noise standards shall be submitted prior to the issuance of a permit.

f. Signage and Wayfinding

All signage shall meet the requirements of the Manual on Uniform Traffic Devices (MUTCD) and Division 22 of the City Code.

g. Zoning Related Design Standards

This project is in an industrial zone and does not require a design review.

h. Construction Management Plan

The construction management plan has been reviewed by city staff and deemed sufficient.

XII. NEXT STEPS

1. Address staff comments
2. Address additional comments of the Planning Board
3. Prepare final plan submission, including site plan submittal requirements as included in 14-527(e) and (f) for review by the Planning Board
4. Hold Planning Board Hearing

XIII. ATTACHMENTS

PLANNING BOARD REPORT ATTACHMENTS

APPLICANT'S SUBMITTALS

A - COVER LETTER
B - SITE PLAN STANDARDS NARRATIVE
C - LETTER OF AGENT AUTHORIZATION-SIGNED
D - LEVEL III SITE PLAN CHECKLIST
E - ZONING ANALYSIS TABLE
F – DEED
G – EASEMENT
H - QUALIFICATIONS & TECHNICAL ABILITY
I - PWD ABILITY TO SERVE DETERMINATION
J - WASTEWATER APPLICATION
K – PHOTOMETRIC PLAN
L - TRUCK TURNING PLAN
M - STORMWATER REPORT
N - FINANCIAL CAPACITY
O -CONSTRUCTION MANAGEMENT PLAN
P - NEIGHBORHOOD MEETING
Q - COMMENTS RESPONSE LETTER

PLANS

P1. COVERSHEET
P2. SITE PLAN
P3. EXISTING & DEMOLITION PLAN
P4. GRADING & UTILITIES PLAN
P5. EROSION CONTROL & LANDSCAPE PLANS
P6. SURVEY - EXISTING CONDITIONS
P7. CODE ANALYSIS
P8. CODE REVIEW PLANS
P9. CONSTRUCTION MANAGEMENT PLAN
P10. DRAINAGE ANALYSIS
P11. PHOTOMETRIC PLAN
P12. FIRST FLOOR PLAN
P13. SECOND FLOOR PLAN
P14. BASEMENT PLAN
P15. ROOF PLAN
P16. EAST & NORTH EXTERIOR ELEVATIONS
P17. WEST & SOUTH EXTERIOR ELEVATIONS

Att. A

WALSH
ENGINEERING ASSOCIATES, INC.

File: 537

August 29, 2019

Mr. Tuck O'Brien
City of Portland, Planning
389 Congress Street
Portland, Maine 04101

RE: 293 Presumpscot Street, Waldron Realty, LLC, Level III Site Plan Application

Dear Tuck,

On behalf of Waldron Realty, LLC we are requesting Level III Site Plan approval for a new building at 293 Presumpscot Street. This building will have a 34,000 square foot footprint. The top floor will be 34,000 square feet accessed from Presumpscot Street. The lower floor, of 17,000 square feet, will be accessed from a private right-of-way on the north. The access in the back will connect to the adjacent building owned by Waldron Realty LLC. The two buildings will complement each other and provide space for vehicle storage.

The existing site is a gravel parking lot. The change to the building will have little impact on the stormwater runoff. A gravel wetland will be constructed to improve stormwater quality and reduce peak flow rates.

The utilities will be extended from Presumpscot Street to the building. Public water and sewer are available in the street.

The building will be used for the storage of vehicles. These will include cars, boats, and even RVs. It will operate under the Portland Motor Club banner.

Thank you for your consideration of our project.

Respectfully,

Thomas S. Greer, PE
Walsh Engineering Associates, Inc.

cc: Bill Waldron, File
Enc.

WALSH
ENGINEERING ASSOCIATES, INC.

293 Presumpscot Street
August 29, 2019

Site Plan Standards (14-526)

Level III Site Plans are subject to the review criteria outlined in Section 14-526 of the City of Portland Land Use Ordinance. Each of these review standards is discussed below:

a. Transportation Standards

1. This project has access from Presumpscot Street and a private right-of-way on the north side. These are connected with a drive thru parking lot. This access allows tractor trailer access to the site for the loading and unloading of vehicles that are stored on site. The parking for the facility is located at the front. The 19 spaces provide parking for members of the Portland Motor Club to park and visit their vehicles. Based on the experience with the adjacent facility, this is adequate parking.
2. Sidewalks along Presumpscot Street have been added to the site plan.
3. 2 bicycle racks have been provided.
4. As a storage facility with little total traffic, a Transportation Management Report is not necessary.

b. Environmental Quality Standards

1. The site is currently fully developed as a parking lot. There is no existing vegetation that would be desirable to save. New trees will be placed along Presumpscot Street and private right-of-way.
2. There are no wetlands on site.
3. This site does not abut a residential zone. Dense buffers are not required.
4. The street trees that will be provided across the front of the site will match the existing site adjacent to this one.
5. Stormwater Management is included in the site development plan. A gravel wetland will be installed between the two buildings. This will provide detention for peak flows and water quality enhancement. The Stormwater Management Report addresses this issue.

c. Public Infrastructure and Community Safety Standards

1. This building will have a fire suppression system in accordance with NFPA Standards.
2. It has access to 3 sides of the building for firefighting access.
3. The facility will have minimal water usage. A letter from Portland Water District on the ability to serve has been requested.
4. A letter from Public Works has been requested for wastewater capacity. It will be connected to the public sewer in Presumpscot Street.

d. Site Design Standards

Massing, Ventilation and Wind Impact: The project, in the industrial zone, meets the bulk and density requirements. It complements the style and size of adjacent structures.

Shadows: Not applicable.

Snow and Ice Loading: The building has side buffers that will accept runoff and snow and ice from the roof.

View Corridors: Not applicable.

Historic Resources: This site is not in a Historic District and has no historic or archeological features.

Exterior Lighting: The site will have lighting for the access and parking lot.

Noise and Vibration: The building has a mechanical/electrical room in the front corner of the building. Two mechanical equipment units will be mounted on the roof.

Signage and Wayfinding: The building will have a free standing sign in front and signage on the building noting it is the home of "Portland Motor Club".

Zoning Related Design Standards: Not applicable.

We believe we comply with the Standards of 14-526. In the event we have missed one or the staff determines we do not comply, we request the board consider a waiver.

To Whom It May Concern,

By this letter, the undersigned authorizes Walsh Engineering Associates, Inc. to act as the agent for Waldron Realty, LLC the undersigned in the preparation and submission of all Federal, State, and Local City permit applications and relevant documents and correspondence for all necessary permits for the construction on the property at 293 Presumpscot Street in Portland, Maine to attend meetings and site visits; to appear before all boards, commissions, and committees, and to provide such other services as are necessary and appropriate in furtherance of the aforementioned project.

Sincerely,

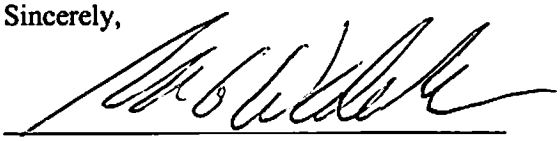

Signature

William Waldron, Member

Printed Name and Title

8-23-19

Date

CITY OF PORTLAND
Planning & Urban Development Department

LEVEL II and LEVEL III SITE PLAN
GENERAL DOCUMENT AND DRAWINGS CHECKLIST
Please submit each document as a separate PDF file
Please confirm by electronically checking the boxes to the left

** PLEASE FILL OUT AND UPLOAD SEPARATELY THE ZONING TABLE AND WAIVER TABLE AS NOTED BELOW **

GENERAL APPLICATION DOCUMENTS		
Yes ☑	NA ☐	**Project Description** • Cover Letter with detailed project description
Yes ☑	NA ☐	**Completed Checklist – Level I: Site Alteration** (this document)
Yes ☑	NA ☐	**Right, Title and Interest** • Deeds, leases, or purchase and sales agreements
Yes ☐	NA ☑	**Evidence of State or Federal Approvals** • Permits or letters of non-jurisdiction, if applicable
Yes ☑	NA ☐	**Zoning Assessment** • Table listing required and proposed uses and dimensional standards Zoning Assessment Table
Yes ☑	NA ☐	**Existing and/or Proposed Easements or Covenants, applicable.** • Evidence of existing easements and any proposed easements
Yes ☐	NA ☑	**Waiver Requests** • Written request for waiver describing request and reason Waiver Table
Yes ☑	NA ☐	**Financial Capability** • Letter or evidence from a financial institution or third party verifying financial capacity to undertake project
Yes ☑	NA ☐	**Technical Capability** • Evidence of technical capability of applicant and consultants – resumes and/or examples of past projects

LEVEL II AND LEVEL III SITE PLAN
STANDARDS AND SUBMISSION CHECKLIST

Provide assessment of compliance with standards and include supplemental documentation, as applicable
Please Submit each document as a separate PDF file

TRANSPORTATION

Yes	NA	
☑	☐	**Transportation Analysis- Traffic Impact (14-526 (a) 1)** • Provisions for pedestrian, bicycle, vehicle, and loading circulation and incremental volume of traffic impacts • Traffic Impact Study (Technical Manual, Section 1) if applicable
☑	☐	**Access and Circulation (14-526 (a) 2 a)** • Access and internal circulation, addressing ADA access • Access and egress impacts on traffic flows • Description and use of drive-up features, if applicable
☑	☐	**Loading and Servicing (14-526 (a) 2 b)** • Loading and servicing needs, route and travel way geometrics for deliveries • Turning templates for delivery vehicles, if applicable
☑	☐	**Sidewalks (14-526 (a) 2 c)** • Sidewalks and condition along street frontages and internal walkways • Engineered details for ADA ramps and public sidewalk details meeting sidewalk materials policy and ADA ramp construction details as applicable (Technical Manual, Section 1)
☐	☑	**Public Transit (14-526 (a) 3), if applicable** • Existing available transit services • Proposed site plan design details, such as easement, pad base, and shelter
☑	☐	**Off-Street Parking: Vehicle & Motorcycle/Scooter) (14-526 (a) 4 a and c)** • Expected parking demand, proposed parking supply, ADA parking, and applicable Zoning Requirements • Address Technical Manual standards (Section 1) for curb cut separation and parking lot layout and locate on site plan
☑	☐	**Bicycle Parking (14-526 (a) 4 b)** • Address bicycle parking requirements and identify locations on-site • Construction details for bike racks (Technical Manual, Section 1)
☑	☐	**Snow Storage (14-526 (a) 4 d)** • Management plan for snow removal and locate snow storage areas on plan
☐	☑	**Traffic Demand Management (TDM) (14-526 (a) 5), if applicable** • Develop TDM with Trip Reduction Targets and Strategies

ENVIRONMENTAL AND LANDSCAPE FEATURES	
Yes NA ☑ ☐	**Preservation of Significant Natural Features (14-526 (b) 1), if applicable** • Trees, plants, habitats listed on State or Federal list of endangered or threatened • High and moderate value waterfowl and wading habitat • Aquifers on Casco Bay Islands • Waterbodies (including wetlands, watercourses, significant vernal pools and floodplains) • Proposed preservation areas and protection measures • Documentation from environmental consultants, determinations from applicable state agencies
Yes NA ☑ ☐	**Landscaping and Landscape Preservation (14-526 (b) 2 a)** • Preservation of trees and preservation within required zoning setbacks (Technical Manual, Section 4) • Protection measures of existing vegetation during construction • Protection measures within Shoreland Zone, if applicable
Yes NA ☑ ☐	**Site Landscaping (14-526 (b) 2 b)** • Screening and buffering of service areas and between non-residential and residential uses • Planting plans with plant schedule and sizes (Technical Manual, Section 4)
Yes NA ☑ ☐	**Parking Lot Landscaping (14-526 (b) 2 b ii), if applicable** • Landscaped islands within parking areas (Technical Manual, Section 4)
Yes NA ☑ ☐	**Street Trees (14-526 (b) 2 b iii)** • Existing Heritage or Feature Trees on site and measures to preserve • Identify street trees on the plan meeting the site plan and Technical Manual standards (Section 4) or identify alternative measures, if applicable
ENVIRONMENTAL AND STORMWATER	
Yes NA ☑ ☐	**Water Quality, Stormwater Management and Erosion Control (14-526 (b)3 a)** • Stormwater report in compliance with Section 5 of Technical Manual and DEP Chapter 500 stormwater for basic, general and flooding standards, as applicable • Erosion control plan and measures • Evidence of compliance with Urban Impaired Stream Standards pursuant to DEP Chapter 500 stormwater, as applicable • Subsurface sanitary sewage disposal and groundwater protection

PUBLIC INFRASTRUCTURE AND SAFETY	
Yes ☐ NA ☑	**Consistency with City Master Plans (14-526 (c) 1)** • Identify consistency with master plans • Proposed easements, rights and improvements to connect or continue off-premises public infrastructure, as applicable
Yes ☑ NA ☐	**Public Safety and Fire Prevention (14-526 (c))** • Address Crime Prevention through Environmental Design (CPTED) (Technical Manual, Section 3) • Emergency vehicle access • Address consistency with public safety standards (Technical Manual, Section 3) • Submit a code summary referring NFPA 1 and all Fire Department standards (Technical Manual, Section 3) – Fire Checklist
Yes ☐ NA ☐	**Availability and Adequacy of Public Utilities (14-526 (c) 3) (Technical Manual, Sections 2 & 9)** • Electrical services, including providing underground services • Identify existing and proposed connections for public utilities and required public utility upgrades • Sewer line connections are required, if there is a main within 200 feet • Proposed solid waste management facilities on-site and management for the site • Written evidence of the ability to serve from utility companies, as applicable
SITE DESIGN	
Yes ☐ NA ☑	**Massing, Ventilations and Wind Impact (14-526 (d) 1)** • Wind and ventilation impacts on adjoining structures and/or adjacent public spaces. Wind study, if applicable • Bulk, location or height impacts on adjoining structures • Identify and locate HVAC equipment and venting away from public spaces and residential properties • Identify screening and manufacturing specifications for noise, if applicable
Yes ☐ NA ☑	**Shadows (14-526 (d) 2), if applicable** • Shadow analysis of impacts on publicly accessible open space (Technical Manual, Section 11)
Yes ☑ NA ☐	**Snow and Ice Loading (14-526 (d) 3)** • Building design to prevent snow and ice from loading or falling onto adjacent properties or public ways
Yes ☐ NA ☑	**View Corridors (14-526 (d) 4), if applicable** • Protection of designated view corridors (Portland Design Manual, Appen. 1)

Yes ☐ NA ☑	**Historic Resources (14-526 (d) 5), if applicable** • Identify developments within Historic Districts or affecting Designated Landmarks • Certificate of Appropriateness or other evidence • Identify Developments within 100 feet of Historic Districts or affecting Designated Landmarks. Advisory HP review may be required • Address preservation and documentation of Archaeological Resources
Yes ☑ NA ☐	**Exterior Lighting (14-526 (d) 6)** • Cut sheets of on-site light fixtures and any architectural or specialty lights (Technical Manual, Section 12) • Engineered details for any lights proposed in street right-of-way (Technical Manual, Section 10)
Yes ☑ NA ☐	**Noise and Vibration (14-526 (d) 7)** • Evidence of noise levels for equipment, such as equipment specifications, to demonstrate consistency with zoning requirements
Yes ☑ NA ☐	**Signage and Wayfinding (14-526 (d) 8), if applicable** • Signage plan showing the location, dimensions, height and setback of all existing and proposed signs. Signs in Historic Districts are reviewed by Historic Preservation staff • Proposed commercial and directional signage on site
Yes ☑ NA ☐	**Zone Related Design Standards (14-526 (d) 5)** • Address Historic Preservation Design Review, if applicable • Address any applicable design review standards by zone • Address submission requirements from Design Manual, page 1, addressing neighborhood context • Description of exterior materials, color, finish, and samples
Construction Management Plan	
Yes ☑ NA ☐	**Construction Management Plan** • Construction Management Document and Plan

LEVEL II AND LEVEL III SITE PLAN
DRAWINGS CHECKLIST

Please upload the following DRAWINGS with the listed details into e-Plan as separate pdfs

RECENT BOUNDARY SURVEY (stamped by Maine Licensed Surveyor)

- [ ] Must be in compliance with Technical Manual, Section 13

SITE PLAN(s) (stamped by Maine Licensed Engineer) including:

Existing Conditions

- [x] Approximate location of structures on abutting property
- [x] Topography
- [x] Locate water courses
- [x] Delineate wetlands
- [x] Zone lines

Proposed Site Plan

- [x] Ground floor area, and grade elevations for all buildings

Access, Circulation, and Parking

- [x] Streets and intersections adjacent to site, any proposed geometric modifications
- [x] Location, dimensions and materials of all existing and proposed driveways, vehicle, bicycle, & pedestrian access ways with corresponding curb lines
- [x] Engineered specifications/ cross-sections for proposed driveways, sidewalks & paved areas
- [x] Location and dimensions of proposed loading areas
- [ ] Existing and proposed transit infrastructure with dimensions/ engineering specifications
- [x] Location of vehicle and bicycle parking with dimensions and engineering specifications

Site Considerations

- [x] Identify snow storage areas
- [x] Location of fire hydrants
- [x] Location of solid waste management facilities

UTILITY PLAN including:

- [x] Existing utilities on site and within public streets
- [x] Location, sizing and directional flows of all existing and proposed utilities
- [x] Location and dimensions of off-premises public or publicly accessible infrastructure adjacent to site
- [x] Electric utility infrastructure

GRADING AND DRAINAGE PLAN including:

- [x] Existing grades and drainage
- [x] Proposed grades
- [x] Proposed stormwater management meeting Technical Manual (Section 5), standards
- [ ] Location and proposed alteration of a water course
- [ ] Preservation or alteration of wetlands

EROSION CONTROL

- [x] Must be in compliance with Technical Manual, Section 5

LANDSCAPE PLAN including:

- [ ] Existing vegetation to be preserved and preservation measures
- [x] Proposed landscaping and buffers
- [x] Planting schedule

RECORDING PLAT, if applicable
☐ If Subdivision, must be in compliance with requirements of Section 14-496 (b)
ARCHITECTURAL PLANS AND RENDERINGS including:
☑ Exterior building elevations, color renderings, illustrations of all sides
☑ Location and dimensions of all existing and proposed HVAC and mechanical equipment, all proposed screening
☐ Provide context drawings, if applicable (Design Manual, page 1)
☑ Floor plans

Portland, Maine Yes. Life's good here.

Planning & Urban Development Department

ZONING ANALYSIS Relevant Zone(s) Industrial (IM)

All Projects:

	Required	Proposed
Lot Size	0	
Area Per Dwelling Unit	n/a	
Minimum Street Frontage	60'	265.42'
Front Yard Minimum	25'	65'
Front Yard Maximum	-	-
Rear Yard	25'	67.5'
Yard Right	25'	25'
Yard Left	25'	25.2'
Side Street Setback	-	-
Step Back	-	-
Maximum Lot Coverage	75%	44%
Minimum Lot Coverage	-	-
Maximum Height	75'	46.4'
Open Space	-	-
Maximum Impervious Area	-	-
Pavement Setback	10'	19.7'
Floor Area Ratio	-	-
Off Street Parking Spaces	-	19
Loading Bays	-	4
Other 1		
Other 2		
Other 3		

Planned Residential Unit Developments (PRUD) Requirements

	Required	Proposed
Minimum Lot Size		
Minimum Lot Area per Dwelling		
Maximum # Units per Building		
Maximum Building Length		
Maximum Accessory Building Length		
Minimum Setbacks		
Minimum Building Separation		
Minimum Open Space		

Affordable Housing Density Bonuses (if applicable)

	Bonus Increase or Decrease	Maximum Allowable With Bonus	Proposed
Density			
Height			
Setback Reduction			
Recreation Space			
Maximum Accessory Building Length			
Minimum Setbacks			
Minimum Building Separation			
Minimum Open Space			
Explanatory Text 1 (optional):			
Explanatory Text 2 (optional):			
Explanatory Text 3 (optional):			

Att. F

Doc#: 20492 Bk:27742 Pg: 201

QUITCLAIM DEED

KNOW ALL PERSONS BY THESE PRESENTS, THAT **Presumpscot Street Holdings, LLC**, a limited liability company created and existing under the laws of the State of Maine and having a business address of 275 Presumpscot Street, Portland, Maine (the "**Grantor**"), in consideration of One Dollar ($1.00) and other valuable consideration paid by **Waldron Realty, LLC** a limited liability company created and existing under the laws of the State of Maine and having a business address of 178 U.S. Route One, Falmouth, Maine (the "**Grantee**"), the receipt whereof Grantor does hereby acknowledge, does hereby QUITCLAIM, REMISE, RELEASE, BARGAIN, SELL AND CONVEY, without covenant, unto the said Grantee, its successors and assigns forever, a certain lot or parcel of land, together with the buildings thereon situated at 275 and 293 Presumpscot Street, Portland, County of Cumberland and State of Maine, bounded and described as follows:

See the attached **Exhibit A**.

This conveyance is subject to the terms and conditions of a certain Mortgage, Assignment of Leases and Rents, Security Agreement and Fixture Filing dated April 30, 2008 ("Mortgage"), executed and delivered by Grantor to KeyBank National Association, recorded in the Cumberland County Registry of Deeds in Book 26029, Page 305, which Mortgage Grantee assumes and agrees to pay.

TO HAVE AND TO HOLD the same, together with all the privileges and appurtenances thereunto belonging, to the said Grantee, its successors and assigns forever.

IN WITNESS WHEREOF, the said Presumpscot Street Holdings, LLC has caused this instrument to be sealed with its corporate seal and signed in its corporate name by William G Waldron, Jr., its Manager thereunto duly authorized, this 16th day of April, 2010.

Signed, Sealed and Delivered
in the Presence of:

William W Bamford

Presumpscot Street Holdings, LLC

By: _____
Name: William G. Waldron, Jr.
Its: Manager

STATE OF MAINE
CUMBERLAND, ss.

APRIL 16TH, 2010

Then personally appeared the above named William G. Waldron, Jr., Manager of said Grantor corporation as aforesaid, and acknowledged the foregoing instrument to be his free act and deed in his said capacity, and the free act and deed of said corporation.

Before me,

Brenda M Markley

Attorney at Law/Notary Public
Printed Name: BRENDA M MARKLEY
My Commission Expires: July 5 2013

SEAL

\\filestore\prolawdocs\0078-0051\248300.doc

BRENDA M. MARKLEY
NOTARY PUBLIC
MY COMMISSION EXPIRES
JULY 5, 2013

SCHEDULE A

Parcel One

A certain lot or parcel of land, together with the buildings thereon, situated on the easterly side of Presumpscot Street, in the City of Portland, County of Cumberland, and State of Maine, bounded and described as follows:

Beginning at an iron on the easterly side of Presumpscot Street marking the Northwest corner of the lot of land conveyed by Canadian National Railway Company to Nappi Distributors by deed dated February 4, 1970 and recorded in the Cumberland County Registry of Deeds in Book 3120, Page 429; thence by the Easterly sideline of Presumpscot Street on a course of N 24° 00' E. three hundred fifty (350.00) feet to an iron; thence by other land now or formerly of Canadian National Railway S 66° 00' E. two hundred seventy-seven and three hundredths (277.03) feet to an iron and the westerly right of way line of the main line of the Canadian National Railway Company; thence by said westerly right of way line S 19° 48' 30" W. six hundred fifty-one and seventy-four hundredths (651.74) feet to an iron and other land now or formerly of Canadian National Railway, said westerly right of way line being parallel and situated at a distance of fifty-five and no tenths (55.0) feet from the center of said main line, measured at right angles; thence by other land now or formerly of Canadian National Railway N 66° 00' W. one hundred forty-four and sixty-seven hundredths (144.67) feet to an iron marking the Southeast corner of land of said Nappi Distributors; thence by land of said Nappi Distributors on the following described courses; N 24° 00' E. three hundred (300) feet to an iron; thence N 66° 00' W. one hundred eighty and no hundredths (180.00) feet to the point of beginning.

Said above-described courses are magnetic and of the date of 1965.

EXCEPTING from the above described premises a portion thereof situated easterly of but not adjacent to Presumpscot Street which was conveyed by Dormol Portland Local Development Co. to Nappi Distributors by deed dated April 5, 1977 and recorded in the Cumberland County Registry of Deeds in Book 3994, Page 116.

The above premises are conveyed subject to the right of Canadian National Railway company, its successors and assigns, to maintain in perpetuity an easement over a strip of land seventeen feet in width along the easterly portion thereof and as hatched in brown on the aforementioned plan dated February 20, 1970 and recorded in Book 83, Page 9.

The above premises are conveyed subject to the provision contained in a deed from Canadian National Railway Company to V.P. Winter Distributing Co. dated April 7, 1970 and recorded in the Cumberland County Registry of Deeds in Book 3125, Page 721, providing a right of first refusal to Canadian National Railway Company, its successors and assigns.

The above premises are conveyed further subject to the condition set forth in the aforementioned deed of Canadian National Railway Company that the owner of the premises agree to erect and forever maintain suitable fences if requested by Canadian National Railway Co., its successors and assigns, on the boundary lines of property separating land of Canadian National Railway Company and the premises conveyed hereby. This covenant is to run with the land and is to be binding upon the grantee, its successors and assigns.

Parcel Two

A certain lot or parcel of land situated on the easterly side of Presumpscot Street in the City of Portland, County of Cumberland and State of Maine, bounded and described as follows:

Beginning at an iron pipe on the Easterly side of Presumpscot Street marking the Northwest corner of the lot of land conveyed by Canadian National Railway Company to V.P. Winter Distributing Co., by deed dated April 7, 1970 and recorded in the Cumberland County Registry of Deeds in Book 3125, Page 721, as shown on a plan of property in Portland, Maine made for Doors and Holdings of Me., Inc. by H. I. and E. C. Jordan recorded in the Cumberland County Registry of Deeds in Plan Book 83, Page 9; thence North 24° 00' East by the Easterly side of Presumpscot Street to the former location of the road leading to Presumpscot Iron Works, said point being the Northwest corner of the seventh parcel of land described in a deed from The City of Portland to Atlantic and St. Lawrence Railroad Company dated April 22, 1904 and recorded in the Cumberland County Registry of Deeds in Book 756, Page 104; thence Easterly by said road to the westerly right of way line of the main line of Canadian National Railway Company being the Northeast corner of said seventh parcel; thence South 24° 00' West by the westerly right of way line of the main line of Canadian National Railway Company to the northeasterly corner of said lot of land conveyed to V. P. Winter Distributing Co. as aforesaid; thence North 66° 00' West by said land conveyed to V. P. Winter Distributing Co. two hundred seventy-seven and three one-hundredths (277.03) feet to the point of beginning.

Parcel Three

ALSO another certain lot or parcel of land situated in the City of Portland, County of Cumberland and State of Maine, and bounded and described as follows:

BEGINNING at an iron pipe marking the Northeasterly corner of the lot of land conveyed by Dormol Portland Local Development Co. to Nappi Distributors by deed dated April 5, 1977 and recorded in the Cumberland County Registry of Deeds in Book 3994, Page 116, said point being in the Easterly sideline of land conveyed to V.P. Winter Distributing Co. as aforesaid; thence North 19° 48' 30" East by said lot conveyed to V. P. Winter Distributing Co. three hundred fifty-one and seventy-four hundredths (351.74) feet to the Southerly corner of the parcel of land herein-above described; thence on the same course by the Easterly side line of said first described parcel forty-two (42) feet to a point; thence South 66° 00' East forty-two (42) feet to a point; thence South 19° 48' 30" West parallel to and maintaining a distance of forty-two (42) feet from the said Easterly sideline of land conveyed to V. P. Winter Distributing Co. three hundred ninety-three and seventy-four hundredths (393.74) feet to the northeasterly corner of the lot of land conveyed by Canadian National Railway Company to Nappi Distributors by deed dated December 19, 1979 and recorded in the Cumberland County Registry of Deeds in book 4556, Page 109, thence North 66° 00' West by said Nappi Distributors land forty-two (42) feet to the point of beginning.

Said above described courses are magnetic and as of the date of 1965.

Parcels Two and Three are the same premises conveyed to Fore Street Associates by deed of Nappi Distributors dated December 21, 1984 and recorded in said Registry of Deeds in Book 6650, Page 211.

Parcels Two and Three are subject to the following restrictions and conditions:

a. The above described premises are conveyed subject to the restrictions that no building or structure, except for fences erected at the request of Canadian National Railway Company as set out more fully below, shall be constructed closer than thirty (30) feet from land or right-of-way of Canadian National Railway Company and that no equipment or vehicle owned or under control of the Grantee shall be stored or parked within twenty (20) feet of the land or right-of-way of Canadian National Railway Company, its successors or assigns. Grantee hereby assumes all risk of damages and injury arising out of all railroad operations and activities of Canadian National Railway Company, its successors and assigns, except those caused by the gross negligence of the Canadian National Railway Company. It is understood and agreed that these restrictions are to run with the land and are to be binding upon the Grantee, its successors and assigns.

b. Without limitation of the generality of the foregoing, Canadian National Railway Company hereby reserves unto itself, its successors and assigns, the perpetual right to use any existing rail siding on the said premises and to enter the premises at any location consistent with the said use for purposes of inspection, repair, improvement and replacement.

c. The Grantee covenants and agrees that in the event it, or its successors and assigns, shall desire or decide to sell or offer to sell the above-described premises, then the Grantee, its successors and assigns, shall immediately notify Canadian National Railway Company of such desire, decision or offer of sale, and all of the terms and conditions thereof, whereupon the Canadian National Railway Company shall have the first option of purchasing the premises on the same terms and conditions, by Canadian National Railway Company giving notice of its election to exercise said option to purchase within thirty (30) days after receipt of said notice from the Grantee, its successors and assigns.

d. As further consideration for this conveyance, Grantee covenants and agrees to erect and forever maintain suitable fences if requested by Canadian National Railway Company, its successors and assigns, on the boundary lines of property separating land of Canadian National Railway Company and this Grantee. It is understood and agreed that this covenant is to run with the land and is to be binding upon the Grantee, its successors and assigns.

e. The above premises are conveyed on an as-is, where-is basis, with no warranties, implied or otherwise, as to the usefulness of said property for any purpose whatsoever.

f. The Grantee hereby agrees to indemnify and hold harmless Canadian National Railway Company for any damage caused by water, snow or debris dumping on the premises above described as a result of Canadian National Railway Company's operation. This conveyance is made subject to any and all land use laws, ordinances and regulations as may be established by Federal, State or Municipal authorities.

Doc#: 20492 Bk:27742 Pg: 205

EXHIBIT A

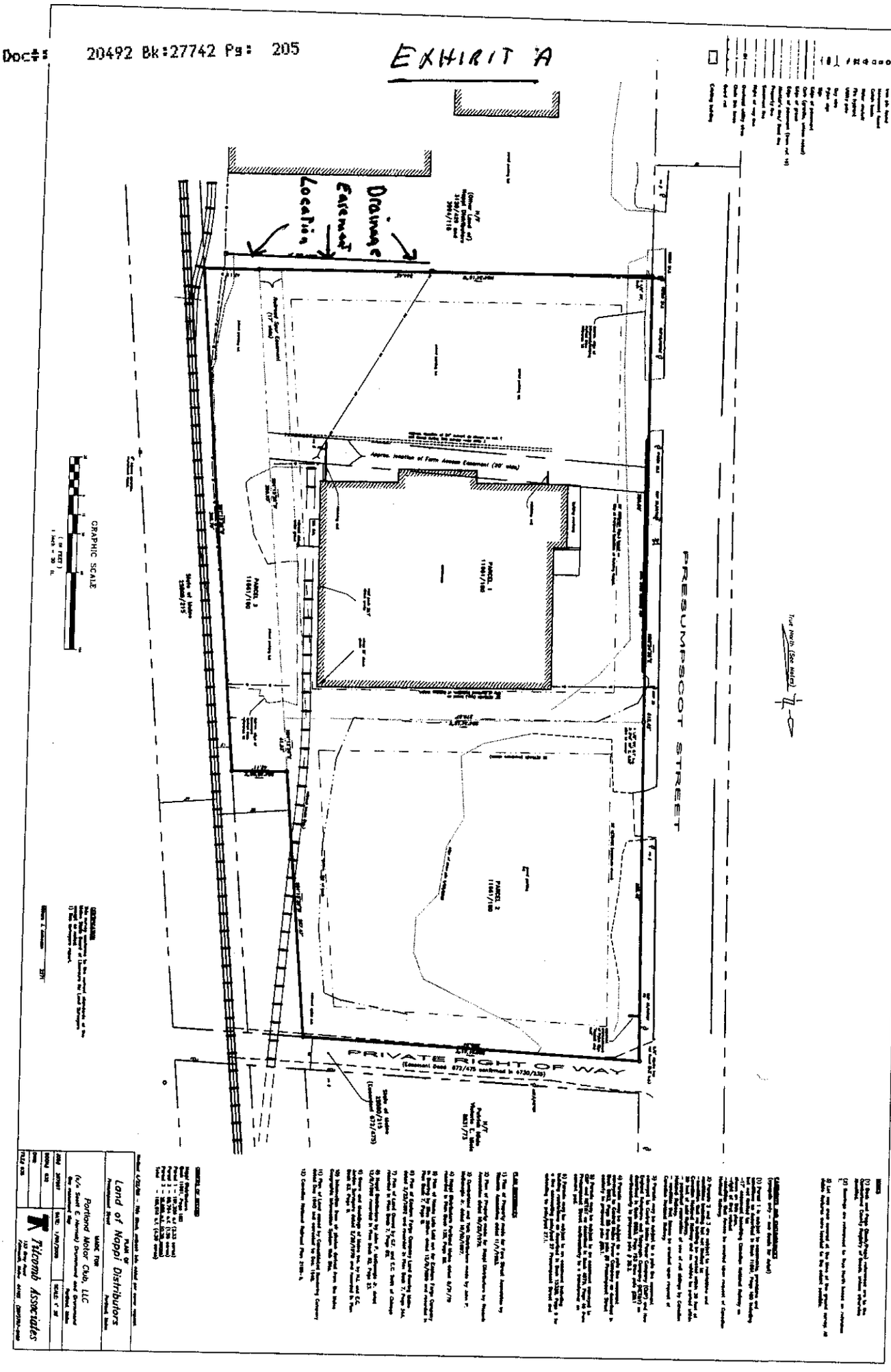

Received
Recorded Register of Deeds
Apr 30,2010 03:19:43P
Cumberland County
Pamela E. Lovley

2074

KNOW ALL MEN BY THESE PRESENTS, That CANADIAN NATIONAL RAILWAY COMPANY, a railroad corporation duly organized and existing by law (successor by amalgamation with the Grand Trunk Railway Company of Canada), with a place of business at Portland, in the County of Cumberland and State of Maine, in consideration of One Dollar and other valuable considerations paid by CORENCO CORPORATION, a corporation duly organized and existing by law whose mailing address is Woburn Street, Tewksbury, Massachusetts, the receipt whereof it does hereby acknowledge, does hereby remise, release, bargain, sell and convey and forever quit-claim unto the said CORENCO CORPORATION, its successors and assigns forever, the following described premises in Portland, County of Cumberland and State of Maine:

A twenty-five (25) foot wide right-of-way running across the land of the Grantor as it is currently in use on this date from the easterly sideline of Presumpscot Street to the westerly sideline of land of the Grantee, for the use and benefit of land of Corenco Corporation located on the easterly side of the Canadian National Railway Company's land.

Also, a right-of-way across land of Grantor for water pipes/necessary for supplying water/and sewer pipes and sewer service to the buildings of land of Corenco located along the line of the present water pipes across the land of Canadian National Railway Company.

Also, the right to have telephone wires and electric wires for lighting purposes in connection with buildings on land of Corenco Corporation as those utilities currently cross the land of Canadian National Railway Company.

Being the same rights as reserved in the warranty deed from Gustavus F. Swift and Edwin C. Swift to Grand Trunk Railway Company dated December 1898, recorded in the Cumberland County Registry of Deeds in Book 672, Page 475, and as relocated under an unrecorded Agreement between the Grand Trunk Railway Company and Gustavus X. Swift and Edwin G. Smith, dated January 28, 1899.

Correct as to title
Real Est. Dept.

The purpose of this deed is to confirm existing rights of Corenco Corporation over land currently owned by Canadian National Railway Company.

TO HAVE AND TO HOLD the premises with all the privileges and appurtenances thereunto belonging to CORENCO CORPORATION, its successors and assigns forever.

IN WITNESS WHEREOF, the said CANADIAN NATIONAL RAILWAY COMPANY has caused these presents to be signed and its corporate

seal to be hereunto affixed by E Buckholz its Gen. Mgr. Real Estate and P-A Quesnel its Assistant Secretary, thereunto duly authorized this 9th day of January, in the year one thousand nine hundred and eighty-One.

WITNESS:

CANADIAN NATIONAL RAILWAY COMPANY

_____ By: _____
Its General Manager of Real Estate

_____ By: _____
Its Assistant Secretary

Approved as to form

Dominion of Canada
Province of Quebec
County of Hochelaga
City of Montreal

January 9, 1981

Personally appeared the above-named P-A Quesnel Assistant Secretary of CANADIAN NATIONAL RAILWAY COMPANY, and acknowledged the foregoing instrument to be his free act and deed, in his said capacity, and the free act and deed of said corporation.

Before me,

_____

G. ERIC URQUHART
COMMISSIONER FOR OATHS
COMMISSAIRE À L'ASSERMENTATION
DISTRICT - MONTREAL

JAN 26 1981

REGISTRY OF DEEDS CUMBERLAND COUNTY, MAINE
Received at 9 H 30 M AM, and recorded in
BOOK 4730 PAGE 235 Edward D. Gerrish Register

The following companies have been retained by the client.

Civil Engineering:
Walsh Engineering Associates, Inc.
One Karen Drive, Suite 2A
Westbrook, ME 04092

Architecture:
David Matero Architecture
100 Front St. Suite 40
Bath, ME 04530

Surveyor:
Titcomb Associates
133 Gray Rd
Falmouth, ME 04105

Project Manager
Dale Akeley
Projects Resources, Inc.
164 Princes Point Rd
Yarmouth, ME 04096

Lawyer:
Scott E. Herrick Esq.
Drummond & Drummond, LLP
One Monument Way
Portland, ME 04101

WALSH
ENGINEERING ASSOCIATES, INC.

Firm Qualifications

Walsh Engineering Associates Inc. (WEA) is a professional consulting engineering firm based in Westbrook, Maine. WEA offers civil engineering, environmental permitting, site planning, project feasibility analysis, landscape design, project management, and construction administration services. The firm was founded in 2009 by William R. Walsh, PE, who has been practicing engineering in New England for over 30 years. Grounded in technical strength, WEA provides expertise in all facets of site work development and construction.

In January 2018, Pinkham and Greer Civil Engineers merged with WEA. Tom Greer, the principal of P&G has joined WEA continuing to manage his client base. Tom brings to Walsh a depth of knowledge and over 35 years' experience as the principal of his company to WEA. Tom's experience in permitting and design for school districts, architects, private developers and industrial clients broadens WEA's capacity and technical knowledge.

The principal and staff have extensive experience in design, permitting (local, state and federal) and construction administration of a wide variety of projects throughout New England. We are licensed professional engineers, LEED Accredited Professionals and accomplished designers committed to the design of sustainable projects.

Walsh Engineering Associates Inc. approaches each project with the utmost concern and attention to detail that each client deserves. WEA prides itself in providing complete consulting services that will be designed, permitted and, most importantly, constructed. By following projects through construction, WEA provides continuity to projects that will serve the clients' best interests. We pride ourselves in being timely and responsive as well as practical in our designs.

The firm's primary services relate to the following types of projects:

- Master Planning
- Institutional Planning and Design
- Commercial Development
- Shoreline Stabilization
- Local, State, and Federal Permitting
- Roadway Design
- Columbarium Planning and Design
- Feasibility Studies
- Construction Management
- Residential Development
- Stormwater Management
- Environmental Permitting
- Utility Planning and Design
- Cemetery Design

Firm Profile

DAVID MATERO ARCHITECTURE

DMA is a versatile, full-service architectural firm located on Front Street in Bath since 2008. Prior to starting DMA, David Matero worked for many years in Portland, Maine and in New York City on a variety of projects that included parks, museums, schools, synagogues, and residential homes.

2019 Marks the 11th year for DMA (the first four years as DayMatero Studio). We have slowly grown with a respected and varied portfolio of projects that includes office buildings, restaurants, custom residential projects, and even bowling alleys. With six people on staff, we are proud of our diverse set of strengths. Many of our projects involve renovating existing buildings and bringing them back to life with an eye towards sustainability and effective lighting.



DMA specializes in unique responses to unique projects. Working with the Maine Dept of Transportation, DMA is working on a master plan for their Region 4 headquarters, and most recently completed a 34,000-office headquarters for Patriot Insurance Company in Yarmouth, ME. In addition, our diverse portfolio includes an adaptive reuse for two separate bowling allies in the Portland area, a large yacht retrofit and storage facility for the Great Island Boat Yard, and a 40,000-sf renovation of a department store into a retail center, office headquarters, and manufacturing facility for Art Forms and Cool As A Moose in Brunswick ME

PROFESSIONAL SERVICES

- Master Planning
- Feasibility Studies
- Site Analysis and Land Planning
- 3-D Modeling
- Building Design
- Historic Renovation
- Building Code Review
- ADA Surveys
- Construction Budgeting

PROJECT TYPE

- Residential
- Commercial
- Educational
- Restaurant
- Retail
- Historic
- Adaptive Re-Use
- Entertainment
- Warehouse

REGISTRATIONS

ME, MA, NY, NCARB

Resume

DAVID S. MATERO, AIA, LEED AP



With over 30 years of professional experience, 2019 marks the 11th anniversary since David began his own practice. With a wide range of experience, from New York City to Portland, Maine, and now Bath, Maine, David has proven to be a detail-oriented architect and manager of people, relying on his vast experience in the field of architecture.

PROFESSIONAL

2011 + **David Matero Architecture** Bath, Maine
A full service architectural firm with diverse experience in custom design and planning services for commercial and residential clients.
Principal

2008 - 2011 **DayMatero studio** Bath, Maine
A full service architectural and lighting design firm with diverse experience in custom design and planning services for commercial and residential clients.
Principal

2001 - 2008 **Stephen Blatt Architects** Portland, Maine
Residential and school construction throughout New England.
Project Architect for numerous school and residential projects.

1993 - 2001 **R G Roesch Architecture & Landscape Architecture** New York, New York
Firm specialized in the master planning and design of urban spaces, museums and zoos.
Associate and *Project Architect*

1989 - 1993 **Albert Schunkewitz & Partners** New York, New York
The firm specialized in design and master planning of large health care facilities and housing projects.
Job Captain and Project Architect

1987 - 1989 **Archtellic Architects** Portland, Maine
The firm specialized in residential, commercial and housing projects.
Model building, rendering, detailing working drawings and architectural photography

EDUCATION

1989 **Rogers Williams University** Bristol, Rhode Island
Five-Year Bachelor of Architecture degree (NAAB)

ARCHITECTURAL REGISTRATION

2010	Massachusetts
2009	National Council of Architectural Registration Boards
2001	Maine
1994	New York (Lapsed)

AWARDS / PUBLICATIONS

May, 2019	Maine Homes by Downeast, *Cool and Collected*
Oct, 2018	Décor Maine, *Tied to the Ocean*
Feb 2018	Maine Home + Design, *No Small Feat*
June, 2017	Downeast Magazine, *Best Maine Architect*
Jan, 2017	Best of House, *Design category*
Jan, 2016	Best of Houzz, *Design category*
Jan, 2016	Maine Home + Design, *On a Poland Pond*
Oct, 2016	Sagadahoc Preservation In Award of Excellence, *Salt Pine Social*
Dec, 2105	Maine Home + Design, *The Architecture Issue*
Aug, 2015	Tiny House Nation (Cable Television)
June, 2015	Maine Home + Design, *Bright-Minded Home*
Jan, 2015	Best of Houzz, Design and Service Category
Dec, 2014	Maine Home + Design, *Design Theory*
Aug, 2013	DownEast Magazine, *The High Life*
Jan, 2013	Best of Houzz, Design and Customer Satisfaction category
Dec, 2012	Maine Home + Design, *The Architecture Issue*
May, 2012	Brunswick Downtown Association Award for Excellence
Nov, 2010	Maine Magazine and Maine Home + Design, *Bayside Bowl*
Aug, 2010	Bowling Center Management, *Bayside Bowl*
Mar, 2008	Maine Home and Design cover (with Stephen Blatt Architects), Techeira Residence
2004	Synagogue Architecture in America: faith, spirit & identity Henry and Daniel Stolzman, published by The Images Publishing Group (with RG Roesch Architecture and Landscape Architecture)
1989	Robert Bradford Newman Award National award for thesis project for "Excellence in the Study of Acoustics and its Application to Architecture

David Matero, cont'd

MEMBERSHIPS

American Institute of Architects, Board of Directors Maine Chapter
National Council of Architectural Registration Boards
US Green Building Council
Main Street Bath
Maine Maritime Museum
The Nature Conservancy
Maine Island Trails Association

CONTACT

David Matero Architecture
100 Front Street, Suite 40
Bath, Maine 04530

207.389.4278
david@davidmatero.com
www.davidmatero.com

Resume

Daniel Ceglinski



Upon completion of college in upstate New York, Dan started his career in Boston on commercial, institutional, and health care projects. He moved to Maine to continued in his professional development, ending up as a Planner and Supervisor at BIW. Dan is happily back fulltime in architecture managing the commercial projects at DMA since 2016.

PROFESSIONAL

2016 + **David Matero Architecture** Bath, Maine
A full service architectural firm with diverse experience in custom design and planning services for commercial and residential clients.
Project Manager

2009 - 2016 **Bath Iron Works, General Dynamics** Bath, Maine
HVAC Design Team Supervisor at full service shipyard specializing in the design, building and support of complex surface combatants for the U.S. Navy. Production Planner for the new Zumwalt Class destroyer.
Supervisor, Engineering & Design

2005 - 2009 **DiGiorgio Associates Inc.** Farmingdale, Maine
Boston-based Architecture, Engineering and Interior Design specializing in healthcare design.
Senior Project Designer and CAD Coordinator

2004 - 2005 **Delhaize Group/Hannaford** Scarborough, Maine
Store Planner and Designer for international food retailer.

2001-2004
1995-2000 **Shepley Bulfinch Richardson & Abbott** Boston, MA
Job Captain and Project Manager at National Design firm providing commercial and institutional architecture.

2000-2001 **Add Inc.** Cambridge, MA
CAD Manager hired to train a rapidly expanding work force to meet high volume demand on high technology Clients in three Offices

1986-2000 **Architectural Design firms** Greater Boston
Increasingly responsible roles at a variety of design firms.

EDUCATION

1984 **Rochester Institute of Technology** Rochester, New York

Memberships Business Network International, Brunswick Chapter

Titcomb Associates

Land Surveying Land Planning

133 Gray Road
Falmouth, Maine 04105-2029
(207) 797-9199
Fax: (207) 878-3142
www.titcombsurvey.com

39 Court Street
Bath, Maine 04530-2017
(207) 443-9199
Fax: (207) 386-5077
www.titcombsurvey.com

Company Overview

Titcomb Associates was founded in 1969 by Robert P. Titcomb to provide surveying services to both the private and public sectors. Robert Titcomb established a reputation as an innovative professional committed to providing high quality surveying services to his clients; that same commitment to excellence is carried on today by his son, David E. Titcomb. Over the past 50 years Titcomb Associates has been engaged in all aspects of land surveying, including boundary location, topography, hydrography, site development, route and corridor surveys, Global Positioning System (GPS) applications, and 3D Terrestrial LiDAR (scanning). Our company's client list includes federal, state, municipal, industrial, commercial and private entities, reflecting the breadth of experience, and diversity and talents, that have made our company a leader in the surveying profession.

Our focus at Titcomb Associates is to provide land surveying and mapping services to support other professions, i.e. engineers, architects, environmental consultants, and real estate professionals. This approach has allowed the company to concentrate its efforts and skills toward providing accurate and comprehensive spatial information on which engineers and land use professionals can rely.

Titcomb Associates maintains offices in Falmouth and Bath, Maine. Our company currently employs three Professional Land Surveyors with over 80 years of combined experience and licenses to practice Land Surveying in Maine, New Hampshire and Vermont. The company has the resources to dispatch six field crews equipped with state-of-the-art Leica survey equipment including a 3D Terrestrial Scanner, real-time kinematic (RTK) GPS, and Robotic Total Stations. Information is processed with Carlson Survey software (AutoCAD) or PowerSurvey software (Microstation) to create a final product that is seamless, comprehensive, and reliable.

Services

Titcomb Associates offers a wide array of services, including:

- Boundary Surveys
- ALTA/ACSM Land Title Surveys
- Topographic Surveys
- Existing Conditions Surveys
- 3D Terrestrial LiDAR (scanning)
- Hydrographic Surveys
- "As-Built" Surveys
- Utility Surveys
- Construction Surveys
- GPS Control Surveys
- GIS Data Collection (GPS Sub-Meter)
- Subdivisions and Site Plans
- FEMA Surveys (Elevation Certificates and Letters of Map Amendment)
- Hazardous Waste Site Surveys [OSHA (29 CFR 1910.120)]

Qualifications

Waldron Realty LLC, William Waldron

Waldron Realty owns and operates the property at 275 Presumpscot Street as Portland Motor Club. This successful venture has led to the current expansion. Adding the 34,000 square foot building will provide adequate area for storage of vehicles for the Motor Club.

In addition to this property, properties in Falmouth, Waldo's and in Saco, Southern Maine Motors are owned and operated by Willian Waldron. The recent expansion of Southern Maine Motors provides a successful background for construction of new properties.

Att. I

Portland Water District

FROM SEBAGO LAKE TO CASCO BAY

September 5, 2019

Tom Greer, P.E.
Walsh Engineering Associates, Inc.
One Karen Drive, Suite 2A
Westbrook, ME 04092

Re: 293 Presumpscot Street, PO
Ability to Serve with PWD Water

Dear Mr. Greer:

The Portland Water District has received your request for an Ability to Serve Determination for the noted site submitted on August 28, 2019. Based on the information provided per plans dated September 5, 2019, we can confirm that the District will be able to serve the proposed project as further described in this letter. **Please note that this letter constitutes approval of the water system as currently designed. Any changes affecting the approved water system will require further review and approval by PWD.**

Conditions of Service

The following conditions of service apply:

- A new 1.5-inch domestic service with a 5/8-inch meter may be installed from the water main in Presumpscot Street. The service should enter through the properties frontage on Presumpscot Street at least 10-feet from any side property lines. An approved backflow prevention device must be installed on the service line directly after the meter prior to service activation.

- A new 6-inch fire service may be installed from the water main in Presumpscot Street. The service should enter through the properties frontage on Presumpscot Street at least 10-feet from any side property lines. An approved backflow prevention device must be installed on the service line directly after the service enters the building prior to service activation.

- The Portland Water District does not have record of any other existing infrastructure in public roads and recommends a survey and test pitting be performed by the development team prior to construction. Any conflicts that arise during construction are at the risk of the developer and may result in job shutdown until new plans are submitted by the developer and reviewed and approved by PWD.

Prior to construction, the owner or contractor will need to make an appointment to complete a service application form and pay all necessary fees. The appointment shall be requested through MEANS@pwd.org or by calling 207-774-5961 ext. 3199. Please allow (3) business days to process the service application paperwork. PWD will guide the applicant through the new development process during the appointment.

225 DOUGLASS STREET P.O. BOX 3553 PORTLAND, MAINE 04104-3553
PHONE: 207.774.5961 FAX: 207.761.8307 WEB: WWW.PWD.ORG

Existing Site Service

According to District records, the project site does not currently have existing water service.

Water System Characteristics

According to District records, there is a 12-inch diameter ductile iron water main in Presumpscot Street and a public fire hydrant located approximately 300 feet from the site. The most recent static pressure reading was 100 psi on July 22, 2019.

Public Fire Protection

The installation of new public hydrants to be accepted into the District water system will most likely not be required. It is your responsibility to contact the Portland Fire Department to ensure that this project is adequately served by existing and/or proposed hydrants.

Domestic Water Needs

The data noted above indicates there should be adequate pressure and volume of water to serve the domestic water needs of your proposed project. Based on the high water pressure in this area, we recommend that you consider the installation of pressure reducing devices that comply with state plumbing codes.

Private Fire Protection Water Needs

You have indicated that this project will require water service to provide private fire protection to the site. Please note that the District does not guarantee any quantity of water or pressure through a fire protection service. Please share these results with your sprinkler system designer so that they can design the fire protection system to best fit the noted conditions. If the data is out of date or insufficient for their needs, please contact MEANS to request a hydrant flow test and we will work with you to get more complete data.

Should you disagree with this determination, you may request a review by the District's Internal Review Team. Your request for review must be in writing and state the reason for your disagreement with the determination. The request must be sent to MEANS@PWD.org or mailed to 225 Douglass Street, Portland Maine, 04104 c/o MEANS. The Internal Review Team will undertake review as requested within 2 weeks of receipt of a request for review.

If the District can be of further assistance in this matter, please let us know.

Sincerely,
Portland Water District



Robert A. Bartels, P.E.
Senior Project Engineer

Att. J

From:	Tom Greer
To:	Bradley Roland
Cc:	Rita Sawyer
Subject:	FW: 293 Presumpscot Street, Portland Wastewater Application (537)
Date:	Friday, August 23, 2019 1:44:33 PM
Attachments:	Wastewater Capacity Application.pdf

Hi Brad,

Attached is a request for capacity letter. The project is on Presumpscot street. Bill Waldron is building another storage facility. It will have very little flow. I assumed it would be equivalent to 6 employees. Thanks for your help.

Tom Greer, PE
Walsh Engineering Associates, Inc.
Office: 207.553.9898
tgreer@walsh-eng.com

GEOPAK SERIES SIZE 2 LED

Architectural Wallpack

TRP2/RDI2/QSP2

Cat.#

Job

Type

HUBBELL Outdoor Lighting

Approvals

Att. K

SPECIFICATIONS

Applications:
Medium sized architectural wallpacks in three stylish shapes accentuate building architecture and provide excellent illumination and uniformity

Construction:
- Die-cast aluminum housing and door
- Seven powder coat standard finishes, plus custom color options

LED:
- 24 or 32 high power LEDs deliver up to 10,800 lumens
- Up to 146 Lumens per watt
- Different lenses offer a variety of distribution patterns - Type I, II, III and IV (Forward throw)
- 3000K - 70 CRI, 4000K - 70 CRI and 5000K - 70 CRI, CCT nominal

Electrical:
- Optional Dual Drivers & Dual Power Feeds for 50, 70 and 90 watt versions
- 120-277, 347 and 480 voltage, 50/60Hz
- Power factor ≥ 90%
- THD (Total Harmonic Distortion) <20%
- Ambient operating temperature -40°C to 40°C
- 20kA surge protection (series); Automatically takes fixture off-line when device is consumed

Installation/Mounting:
- Quick-mount adapter with gasket seal provides easy installation to wall or to recessed junction box (4" square junction box). Fixture attaches by two Allen-head hidden fasteners for tamper resistance.
- Black box accessory available for surface conduit application
- Optional inverted/up mounting (must specify when ordering)

Options/Controls:
- Drivers are 0-10V dimming standard
- Universal button photocontrol for dusk to dawn energy savings
- Photocell and occupancy sensor options available for complete on/off and dimming control
- Occupancy sensor options available for complete on/off and dimming control
- In addition, GeoPak Size 2 can be specified with SiteSync™ wireless control system for reduction in energy and maintenance cost while optimizing light quality 24/7. See ordering information or visit www.hubbelllighting.com/sitesync for more details

Listings:
- IP65 rated housing
- DesignLights Consortium® (DLC) qualified. Please refer to the DLC website for specific product qualifications at www.designlights.org
- Zero uplight (U0), dark sky, neighbor friendly
- Drivers IP66 and RoHS compliant

Battery Backup:
- Intergral Battery Backup provides emergency lighting for the required 90 minute path of egress.
- Includes a long-life Lithium Iron Phosphate battery with optional battery heater for cold temperature application.
- Utilizes 4 LEDs in emergency mode with 657 lumens. Each of the 4 LEDs in emergency are designed to function independently in the unlikely event of a single LED malfunction
- Spectron® self-testing/self-diagnostic electronics are included standard
- Independent dedicated driver and LED array for battery/emergency mode operation.

Warranty:
For more information visit:
http://www.hubbelloutdoor.com/resources warranty/

PRODUCT IMAGE(S)



DIMENSIONS

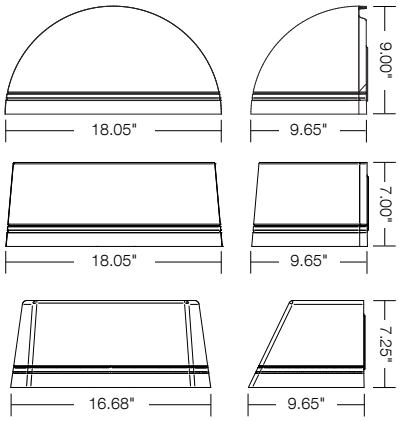

QSP2
Weight:
15 lbs (6.8 kg)

RDI2
Weight:
16 lbs (7.3 kg)

TRP2
Weight:
16 lbs (7.3 kg)

CERTIFICATIONS/LISTINGS

c UL us

DLC QPL LISTED

ida DARK SKY APPROVED 2016

*3000K and warmer CCTs only

SHIPPING INFORMATION

Catalog Number	G.W(kg)/ CTN	Carton Dimensions		
		Length Inch (cm)	Width Inch (cm)	Height Inch (cm)
QSP2	17 (7.7)	20.5 (52)	10.5 (26)	11 (28)
RDI2	18 (8.2)	20.5 (52)	9.5 (24)	12 (30)
TRP2	16 (7.3)	18.5 (47)	9.5 (24)	11.5 (29)

ORDERING INFORMATION

ORDERING EXAMPLE: TRP2-24L30-3K7-2-UNV-DB

[ ] - [ ] - [ ] - [ ] - [ ] - [ ] - [ ] - [ ] - [ ]

FAMILY		LEDS - WATTAGE		CCT		DISTRIBUTION		VOLTAGE	
TRP2	Trapezoid	24L-30	24 LEDs, 30 watts	3K7	3000K, 70CRI	1	Type I	UNV	120-277V
RDI2	Radius	24L-50	24 LEDs, 50 watts	4K7	4000K, 70CRI	2	Type II	120	120V
QSP2	Qtr-sphere	24L-70	24 LEDs, 70 watts	5K7	5000K, 70CRI	3	Type III	208	208V
		24L-90	24 LEDs, 90 watts			4	Type IV	240	240V
		32L-70	32 LEDs, 70 watts					277	277V
		32L-90	32 LEDs, 90 watts					UHV[1]	347/480V
								347[1]	347V
								480[1]	480V

FINISH		CONTROL OPTIONS		OPTIONS	
BL	Black Textured	PC	Button Photocontrol	SF[3]	Single Fuse & Fuse Holder
DB	Dark Bronze Textured	SCP[4,5]	Programmable occupancy sensor, factory default is 10% light output	DF[3]	Double Fuse & Fuse Holder
GT	Graphite Textured	SCO[4]	Sensor Control, On/Off	E[3]	Battery Pack (0ºC)
GR	Gray Textured Matte	SWP[3,7]	SiteSync Pre-Commission	EH[3]	Battery Pack (-30ºC) with heater
GYS	Light Gray Smooth	SWPM[3,4,7,8]	SiteSync Pre-commission w/Occupancy Sensor	2DR[6]	Dual Drivers
PS	Platinum Silver Smooth	**SPEC SCP/SCO & SWPM MOUNT HEIGHT**		2PF[6]	Dual Power Feeds
WH	White Textured	-8F	Up to 8ft mount height	CS	Comfort Shield
CC	Custom Color	-20F	Up to 20ft mount height		

SECONDARY MOUNTING	
BLANK	Downlight Only
NV[2]	Inverted/Up Mounting

[1] 70 & 90 watt versions only
[2] Not available with SCP, SCO, SWPM sensor and E/EH battery options
[3] Must specify voltage (120, 277 or 347V only for SWP & SWP, 120 or 277V only for E & EH)
[4] PCU option not applicable, included in sensor
[5] Must order minimum of one remote control to program dimming settings, 0-10V fully adjustable dimming with automatic daylight calibration and different time delay settings
[6] Not available with 30w version
[7] Not available with E/EH options. Must specify group and zone information at time or order. See www.HubbellLighting.com/products/sitesync for future details
[8] Specify time delay; dimming level and mounting height

Hubbell Outdoor Lighting • 701 Millennium Boulevard • Greenville, SC 29607 • Phone: 864-678-1000

Due to our continued efforts to improve our products, product specifications are subject to change without notice.

© 2019 HUBBELL OUTDOOR LIGHTING, All Rights Reserved • For more information visit our website: **www.hubbelloutdoor.com** • Printed in USA

ACCESSORIES (ORDER SEPARATELY)

Catalog Number	Description
SCP-REMOTE*	Remote control for SCP option. Order at least one per project to program and control dimming settings
BB-GEO-XX	Black box with 4 - 1/2" threaded conduit holes, specify finish by replacing "XX" with finish selection, eg. Dark Bronze "DB"
SWUSB**	SiteSync loaded on USB flash drive (Windows based only)
SWTAB**	SiteSync Windows Tablet
SWBRG+	SiteSync Wireless Bridge Node

* Must order minimum of one remote control to program dimming settings, 0-10V fully adjustable dimming with automatic daylight calibration and different time delay settings.
** When ordering with SiteSync, one of the following interface options must be chosen an ordered separately. Each option contains the SiteSync License, GUI and Bridge Node.
\+ If needed, an additional Bridge Node can be ordered.

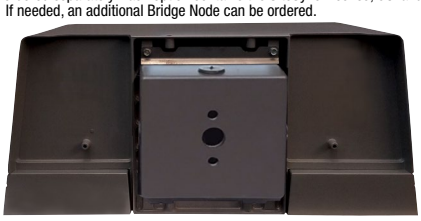

BB-GEO-XX – Mounted to luminaire

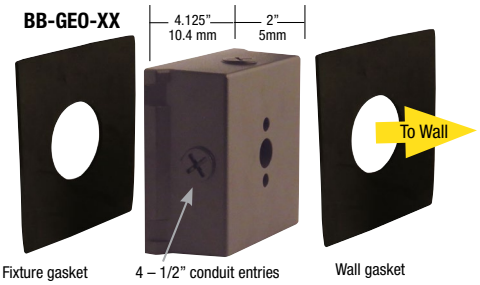

INPUT POWER CONSUMPTION

# OF LEDS	DRIVE CURRENT (mA)	INPUT VOLTAGE (V)	CURRENT (Amps)	SYSTEM POWER (w)
24	350mA	120	0.23	28
		277	0.10	28
	625mA	120	0.41	49
		277	0.18	49
	900mA	120	0.59	71
		277	0.25	71
		347	0.20	71
		480	0.15	71
	1100mA	120	0.72	87
		277	0.31	87
		347	0.25	87
		480	0.18	87
32	650mA	120	0.56	67
		277	0.24	67
		347	0.19	67
		480	0.14	67
	850mA	120	0.69	83
		277	0.30	83
		347	0.24	83
		480	0.17	83

PERFORMANCE DATA

				5K (5000K nominal, 70 CRI)					4K (4000K nominal, 70 CRI)					3K (3000K nominal, 70 CRI)				
# OF LEDS	DRIVE CURRENT	SYSTEM WATTS	DIST. TYPE	LUMENS	LPW[1]	B	U	G	LUMENS	LPW[1]	B	U	G	LUMENS	LPW[1]	B	U	G
24	350mA	28	1	4,075	146	1	0	0	4,065	146	1	0	0	3,660	131	0	0	0
			2	3,747	134	1	0	1	3,738	134	1	0	1	3,366	121	1	0	1
			3	3,756	135	1	0	1	3,747	134	1	0	1	3,374	121	1	0	1
			4	3,656	131	0	0	1	3,647	131	0	0	1	3,284	118	0	0	1
	625mA	49	1	6,329	130	1	0	0	6,313	130	1	0	0	5,685	117	1	0	0
			2	5,820	120	1	0	1	5,806	119	1	0	1	5,228	108	1	0	1
			3	5,833	120	1	0	2	5,819	120	1	0	2	5,240	108	1	0	2
			4	5,678	117	1	0	2	5,664	117	1	0	2	5,100	105	1	0	2
	900mA	71	1	8,613	122	1	0	1	8,592	122	1	0	1	7,737	110	1	0	1
			2	7,921	112	1	0	2	7,902	112	1	0	2	7,115	101	1	0	2
			3	7,939	112	1	0	2	7,920	112	1	0	2	7,131	101	1	0	2
			4	7,728	109	1	0	2	7,709	109	1	0	2	6,942	98	1	0	2
	1100mA	87	1	10,791	124	1	0	1	10,765	124	1	0	1	9,694	112	1	0	1
			2	9,924	114	2	0	2	9,900	114	1	0	2	8,915	103	1	0	2
			3	9,946	115	1	0	2	9,922	114	1	0	2	8,935	103	1	0	2
			4	9,682	112	1	0	2	9,659	111	1	0	2	8,696	100	1	0	2
32	650mA	67	1	8,621	129	1	0	1	8,600	128	1	0	1	7,744	116	1	0	1
			2	7,928	118	1	0	2	7,909	118	1	0	2	7,122	106	1	0	2
			3	7,946	119	1	0	2	7,927	118	1	0	2	7,137	107	1	0	2
			4	7,735	115	1	0	2	7,716	115	1	0	2	6,948	104	1	0	2
	850mA	83	1	10,806	130	1	0	1	10,780	130	1	0	1	9,705	117	1	0	1
			2	9,938	120	2	0	2	9,914	119	1	0	2	8,927	108	1	0	2
			3	9,960	120	1	0	2	9,936	120	1	0	2	8,947	108	1	0	2
			4	9,695	117	1	0	2	9,672	117	1	0	2	8,709	105	1	0	2

© 2019 HUBBELL OUTDOOR LIGHTING, All Rights Reserved • For more information visit our website: **www.hubbelloutdoor.com** • Printed in USA

PHOTOMETRIC REPORTS

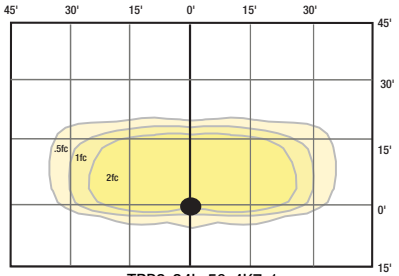

TRP2-24L-50-4K7-1
15' MOUNTING HEIGHT

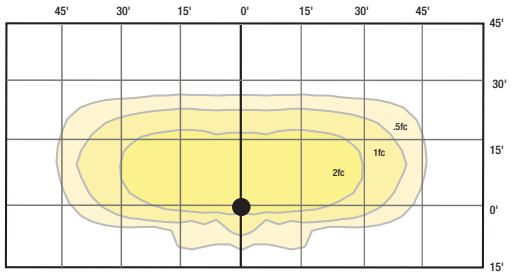

TRP2-24L-50-4K7-2
15' MOUNTING HEIGHT

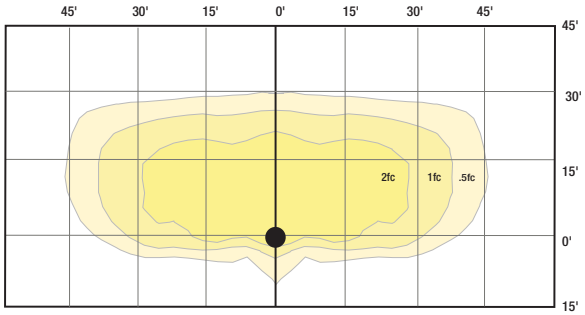

TRP2-24L-50-4K7-3
15' MOUNTING HEIGHT

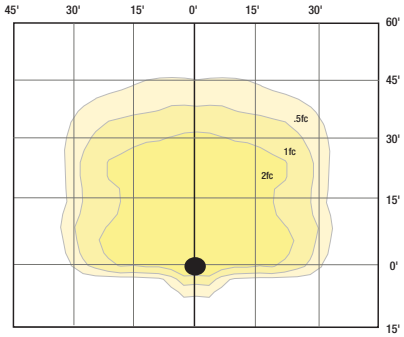

TRP2-24L-50-4K7-4
15' MOUNTING HEIGHT

PHOTOMETRICS - BATTERY BACK UP

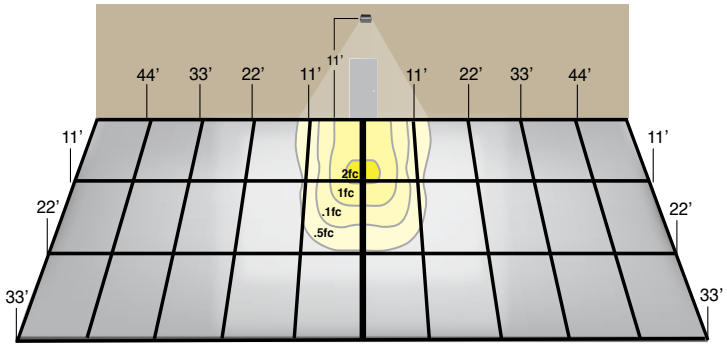

11' Mounting Height

Provides Life Safety Code average illuminance of 1.0 fc. Assumes open space with no obstructions and mounting height of 11'.

Diagrams for illustration purposes only, please consult factory for application layout.

Battery backup units consume 6 watts when charging a dead battery and 2 watts during maintenance charging.
EH (units with a heater) consume up to an additional 8 watts when charging if the battery temp is lower than 10°C

E & EH EMERGENCY BATTERY BACKUP

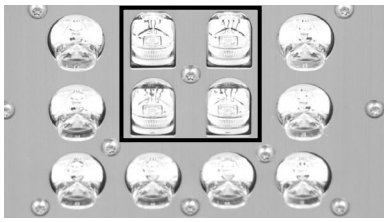

24 or 32 high power LEDs generate up to 11,000 lumens in normal mode and use 4 LEDs for up to 700 lumens in emergency mode.

INVERTED MOUNTING

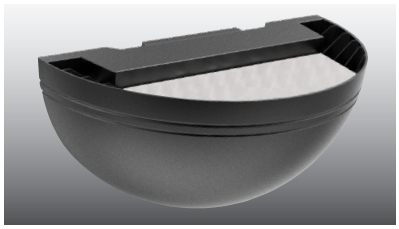

Inverted mounting capabilities for uplighting applications. Specially designed frosted acrylic diffuser softens output, improves uniformity and prevents water from collecting.

COMFORT SHIELD

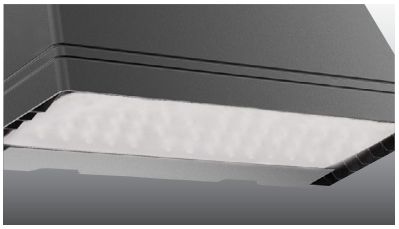

Comfort shield option utilizes a frosted acrylic lens that softens output and improves uniformity. Available from the factory or as an accessory for field installation.

CONTROL OPTIONS



Programmable occupancy sensor offers greater control and energy savings with adjustable delay and dimming levels (Factory default is 10%)

© 2019 HUBBELL OUTDOOR LIGHTING, All Rights Reserved • For more information visit our website: **www.hubbelloutdoor.com** • Printed in USA

GEOPAK SERIES SIZE 1 LED

Architectural Wallpack

TRP1/RDI1/QSP1

NEW

Cat.#	
Job	Type

HUBBELL Outdoor Lighting

Approvals

SPECIFICATIONS

APPLICATIONS

- Small sized architectural wallpacks in three stylish shapes with molded contours to accentuate building architecture. Provides excellent illumination in energy-saving LED systems.
- Back box accessory available for surface conduit application.

Construction:

- Housing is made from die-cast aluminum with a hinged back-plate for ease of installation and maintenance.
- The LED bezel and trim-plate are made of stainless steel.
- Five powder coat standard finishes, plus custom color options.
- Wet Location Listed to UL924 and UL1598 Standard.

LED:

- 12 high power LEDs delivering up to 3,000 lumens.
- Up to 118 lumens per watt
- Type II, III and IV distributions for a wide variety of applications.
- Zero uplight (U0), dark sky, neighbor friendly

Electrical:

- 120-277 operation, 50/60Hz
- 0-10V dimming driver standard
- 10kA surge protector
- Photocell and occupancy sensor options available for complete on/off and dimming control

Battery Backup:

- Intergral Battery Backup provides emergency lighting for the required 90 minute path of egress.
- Includes a long-life Lithium Iron Phosphate battery with optional battery heater for cold temperature application.
- Utilizes 4 LEDs in emergency mode with 657 lumens. Each of the 4 LEDs in emergency are designed to function independently in the unlikely event of a single LED malfunction
- Spectron® self-testing/self-diagnostic electronics are included standard
- Independent dedicated driver and LED array for battery/emergency mode operation.

Installation:

- Universal plate for mounting to standard 3 1/2" and 4" square electrical boxes. All connections are made from connections at the rear of the unit.
- Optional back-box accessory available for surface conduit application. See BB-Geo accessories.

Listings:

- UL 1598 listed for use in wet locations
- Drivers IP66 and RoHS compliant
- DesignLights Consortium® (DLC) qualified. Please refer to the DLC website for specific product qualifications at www.designlights.org

Warranty:

- For more information visit:

http://www.hubbelloutdoor.com/resources/warranty/

PRODUCT IMAGE(S)



DIMENSIONS

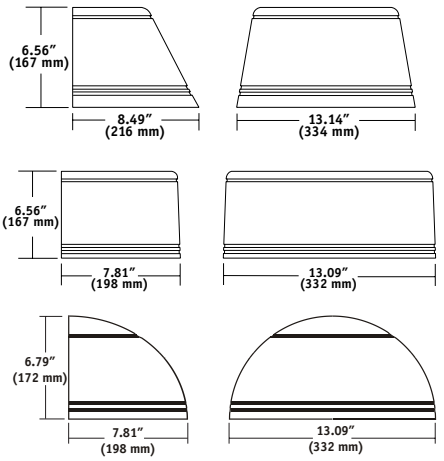

SHIPPING INFORMATION

Catalog Number	Weight (lbs)	Carton Dimensions		
		Length Inch (cm)	Width Inch (cm)	Height Inch (cm)
TRP1	11.5	17.0	9.9	10.0
RDI1	11.5	18.0	11.0	9.25
QSP1	10.5	17.0	9.6	10.5

CERTIFICATIONS/LISTINGS

C US

*3000K and warmer CCTs only

ORDERING INFORMATION

ORDERING EXAMPLE: TRP-12L-20-4K-3-1-BL-SCP-EH

[ ] - [ ] - [ ] - [ ] - [ ] - [ ] - [ ] - [ ] - [ ] - [ ]

HOUSING	VERSION	WATTAGE	CCT/CRI	DISTRIBUTION	VOLTAGE	FINISH	CONTROL OPTIONS	OPTIONS
TRP1 Trapezoid	**12L** 12 LEDS	**15** 15 watts	**3K7** 3000K, 70CRI	**2** Type II	**U** 120-277	**BL** Black	**PCU** Button Photocell	**F**[4] Fusing (only available with STD fixture configuration, 120-277V only)
RDI1 Radius		**20** 20 watts	**4K7** 4000K, 70CRI	**3** Type III	**1** 120	**DB** Bronze	**SCP**[2,3] Programmable Motion Sensor	**E**[1] Battery Pack (0˚C)
QSP1 Quartersphere		**30** 30 watts	**5K7** 5000K, 70CRI	**4** Type IV	**2** 208	**GR** Gray	**SPECIFY SCP HEIGHT**	**EH**[1] Battery Pack (-30˚C) with heater
					3 240	**PS** Platinum	**8F** Up to 8ft mount height	
					4 277	**WH** White	**20F** Up to 20ft mount height	
						CC Custom		

[1] Voltage specific (120 or 277V only)
[2] Must order minimum of one remote control to program dimming settings, 0-10V fully adjustable dimming with automatic daylight calibration and different time delay settings, 120-277V only
[3] PCU option not applicable, included in sensor
[4] Must specify input voltage (120, 208, 240 or 277)

Due to our continued efforts to improve our products, product specifications are subject to change without notice.
© 2016 HUBBELL OUTDOOR LIGHTING, All Rights Reserved • For more information visit our website: **www.hubbelloutdoor.com** • Printed in USA

ACCESSORIES - Order separately

Catalog Number	Description
SCP-REMOTE[2]	Remote control for SCP option. Order at least one per project to program and control.
BB-GEO-XX	Back box with 4 - 1/2" threaded conduit holes, specify finish by replacing "XX" with finish selection, eg. Dark Bronze "DB"

[2] Must order minimum of one remote control to program dimming settings, 0-10V fully adjustable dimming with automatic daylight calibration and different time delay settings, 120V-277V only



BB-GEO-XX – Mounted to luminaire

BB-GEO-XX

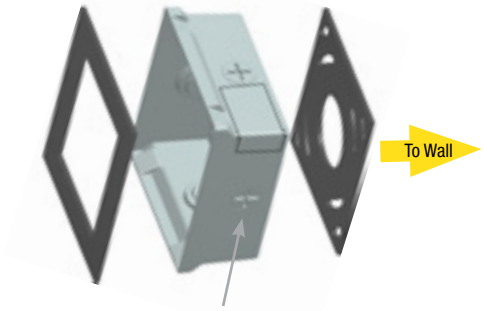

PERFORMANCE DATA (AC/Standard Configurations)

				5K (5000K nominal, 70 CRI)					4K (4000K nominal, 70 CRI)					3K (3000K nominal, 70 CRI)				
# OF LEDS	DRIVE CURRENT	SYSTEM WATTS	DIST. TYPE	LUMENS	LPW[1]	B	U	G	LUMENS	LPW[1]	B	U	G	LUMENS	LPW[1]	B	U	G
12	350mA	13.9	2	1635	118	1	1	1	1577	113	1	1	1	1497	108	1	1	1
			3	1613	116	1	0	1	1556	112	1	0	1	1477	106	1	0	1
			4	1607	116	0	0	1	1550	111	0	0	1	1471	106	0	0	1
	500mA	19.9	2	2268	114	1	1	1	2176	109	1	1	1	2077	104	1	1	1
			3	2245	113	1	0	1	2140	108	1	0	1	2049	103	1	0	1
			4	2229	112	0	0	1	2150	108	0	0	1	2041	103	0	0	1
	700mA	28.2	2	2942	104	1	1	1	2885	102	1	1	2	2721	96	1	1	1
			3	2912	103	1	0	1	2836	101	1	0	1	2685	95	1	0	1
			4	2892	103	1	0	1	2789	99	1	0	1	2674	95	1	0	1

Electrical Data

Input Power Consumption

Drive Current (mA)	Input Voltage (V)	System Power (w)	Current (Amps)
350mA	120	13.9	0.12
	277		0.05
500mA	120	19.9	0.17
	277		0.07
700mA	120	28.2	0.24
	277		0.10

Battery backup units consume additional power during charging (maximum 32.2 watts for E, 50.7 watts for EH)

Projected Lumen Maintenance

Ambient Temp.	Operating Hours 0	25,000	50,000	TM-21-11[1] 60,000	100,000	L70 (hours)
25°C/77°F	1.00	0.98	0.97	0.95	0.91	>345,000
40°C/104°F	1.00	0.96	0.95	0.92	0.87	>268,000

LUMINAIRE AMBIENT TEMPERATURE FACTOR (LATF)

AMBIENT TEMPERATURE		LUMEN MULTIPLIER
0° C	32° F	1.02
10° C	50° F	1.01
20° C	68° F	1.00
25° C	77° F	1.00
30° C	86° F	1.00
40° C	104° F	0.99
50° C	122° F	0.98

Use these factors to determine relative lumen output for average ambient temperatures from 0-40°C (32-104°F).

PHOTOMETRIC REPORTS
(30w, 4000K shown)

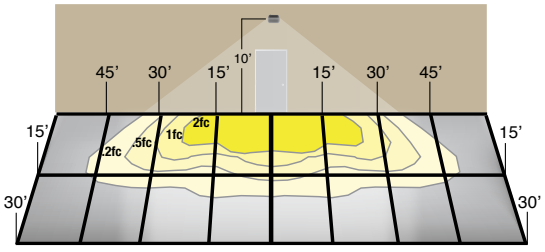

TYPE II

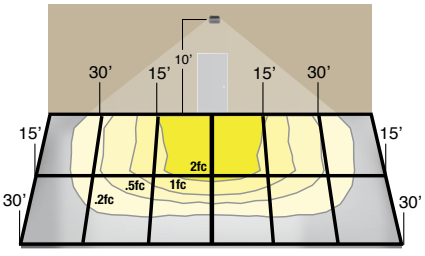

TYPE III

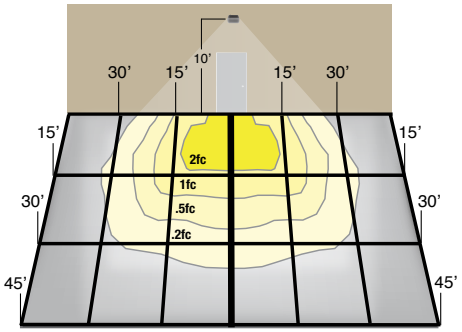

TYPE IV (Forward throw)

Due to our continued efforts to improve our products, product specifications are subject to change without notice.
© 2016 HUBBELL OUTDOOR LIGHTING, All Rights Reserved • For more information visit our website: **www.hubbelloutdoor.com** • Printed in USA

GeoPak - Battery Back Up

Functional Circuitry: Transient surge protection device on AC input. Upon failure of the normal utility power, an LED driver is automatically activated to power the emergency LEDs. Upon resumption of normal utility power, the LED driver is turned off, and the battery is recharged through a micro-controller based 3-stage charger. The battery is a maintenance-free Lithium Iron Phosphate (LiFePo) type. A low voltage battery disconnect (LVD) feature protects the battery from severe damage during prolonged power failures. Manual testing is available at any time using the push-to-test button. The optional heater features a heating wrap and thermostat to maintain optimal battery temperature during charge or discharge. The GeoPak includes the following features:

- Battery re-charge within 24 hours
- AC Lock-out circuit
- Self-diagnostics monitors LED status, LED driver circuit, battery capacity and charger function and displays any fault detection by means of a flashing code.
- Self-Test feature runs a 1 minute test once a month and an alternating 30 or 60 minute test once every 6 months. Multi-color LED indicator provides visible fault detection and charging status.
- User initiated 1, or 90-minute system test feature
- 15 minute re-transfer delay
- Automatic unit transfer in brown-out conditions (below 80% of nominal AC input voltage).
- Battery backup units consume 6 watts when charging a dead battery and 2 watts during maintenance charging. EH (units with a heater) consume up to an additional 8 watts when charging if the battery temp is lower than 10°C

Emergency Photometric Performance (1 fc average .1 fc minimum)

28’ multi-unit spacing at 10’ MH with 0/30/10 reflectances on a 6’ path

26’ x 10’ single unit coverage at 10’ MH with 0/30/10 reflectances

6’ x 19’ forward throw coverage at 10’ MH with 0/30/10 reflectances

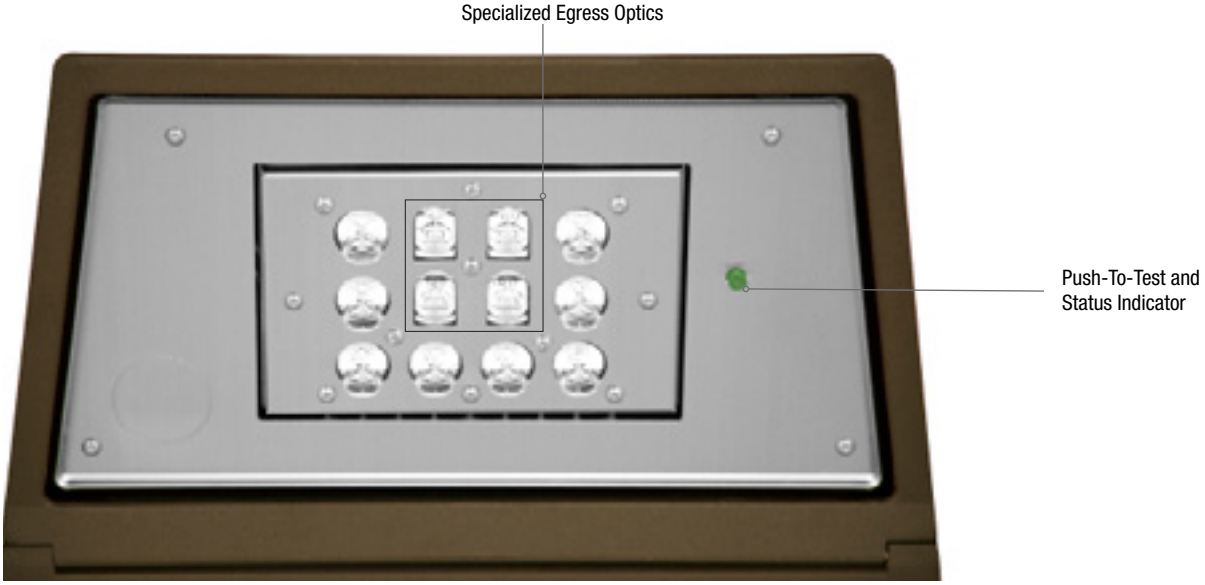

Normal Mode

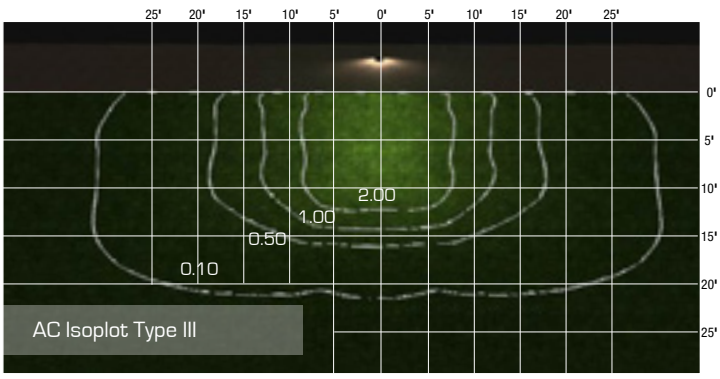

Emergency Mode

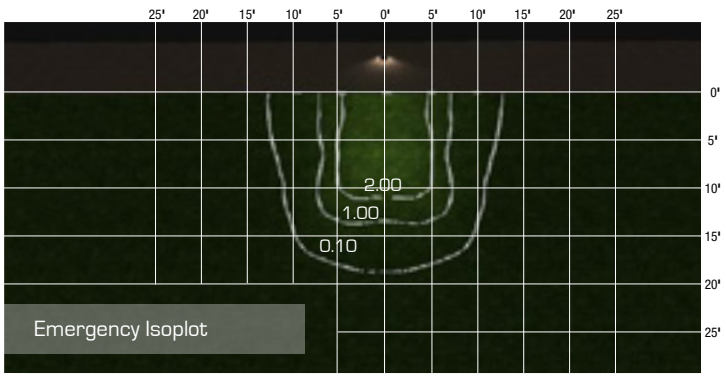

Provides Life Safety Code average illuminance of 1.0 fc. Assumes open space with no obstructions.

Diagrams for illustration purposes only, please consult factory for application layout.

© 2016 HUBBELL OUTDOOR LIGHTING, All Rights Reserved • For more information visit our website: **www.hubbelloutdoor.com** • Printed in USA

Att. L

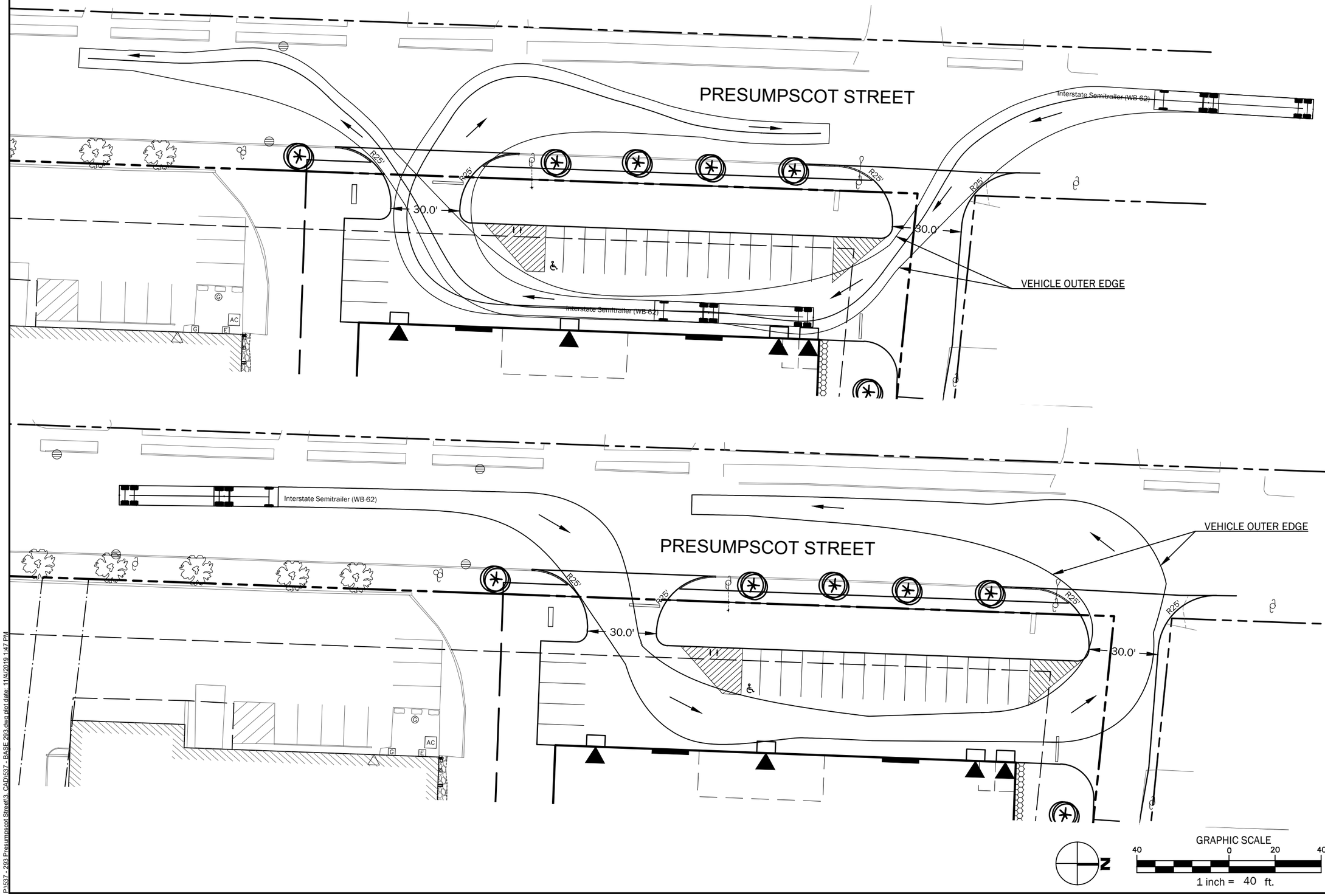

Sheet Number: T1

Sheet Title: TRUCK TURNING ANALYSIS

Job No.:	537
Date:	OCTOBER 18, 2019
Scale:	AS SHOWN
Drawn:	JDC/JWG
Checked:	TSG

PORTLAND MOTOR CLUB
293 PRESUMPSCOT STREET
PORTLAND, MAINE

REV. 1 11/4/2019 CITY REVIEW COMMENTS

WALSH
ENGINEERING ASSOCIATES, INC.
One Karen Dr., Suite 2A | Westbrook, Maine 04092
ph: 207.553.9898 | www.walsh-eng.com

Copyright © 2019

P:\537 - 293 Presumpscot Street\3_CAD\537 - BASE 293.dwg plot date: 11/4/2019 1:47 PM

WALSH
ENGINEERING ASSOCIATES, INC.

Att. M

STORMWATER MANAGEMENT REPORT

For

293 Presumpscot Street
Portland, Maine

August 21, 2019
(Revised November 6, 2019)

Submitted by:
Walsh Engineering Associates, Inc.
One Karen Drive, Suite 2A
Westbrook, Maine 04092

WALSH
ENGINEERING ASSOCIATES, INC.

STORMWATER MANAGEMENT REPORT
293 Presumpscot Street
Portland, Maine
August 21, 2019

Introduction

Waldron Realty, LLC plans to construct a 34,000 square foot building for vehicle storage. It is located at 293 Presumpscot Street, adjacent the current storage building operated as Portland Motor Club. All vehicles are stored indoors. The building will be accessed off Presumpscot Street for the upper level and off a private right-of-way for the 17,000 square foot lower level.

The access is designed to accommodate tractor trailer deliveries on-site. No loading of vehicles should occur in Presumpscot Street.

Methodology

Stormwater runoff analysis has been performed to comply with the City of Portland Standards. The HydroCAD Stormwater Modeling System software (Version 10.0) developed by the Applied Microcomputer Systems of Chocorua, New Hampshire was used for the analysis. The program is based upon the TR-20 computer program and the TR-55 tabular method, both of which are based upon techniques developed by the USDA Soil Conservation Service. The analysis was performed for the 2, 10 and 25-year 24-hour frequency storm events for Cumberland County, 3.1, 4.6 and 5.8 inches of rainfall with a Type III distribution.

Pre-Development Conditions

The current site is fully developed with a 46,000 square foot fenced gravel storage yard. The area is relatively flat with grades in the 3 to 5% range. It drops off at the back to an existing railroad siding. The rail system was used by the previous tenant of the site. Around the storage yard are small grassed areas.

Soils

The existing site has been fully developed with gravel fill. No original soils exist.

Existing Stormwater Systems

The site drains from Presumpscot Street on the west to the rail bed on the east. There are no catchbasins or piping systems on site, all flow is overland. There is a 15" culvert at the rail bed in poor condition. This was used as a Point of Analysis. The site effectively drains through the bedding material of the rail bed.

Post-Development Conditions

The proposed project will include the construction of a building with access drives that creates similar conditions to the existing conditions. The gravel parking is replaced with the building.

Flow from the west side of the building along Presumpscot Street flows to the south between the existing building and the proposed building. A gravel wetland will be constructed between the two buildings, providing treatment and detention for the runoff.

The pollutant priority ranking system noted in Chapter 500 of the Stormwater Regulations results in no treatment being required. Under the City's Standards, Level II and Level II Site Plans require treatment. Based on the ranking system 50% of the developed area requires treatment. This is obtained by treating the front paving, half of the new building roof and half of the existing building roof. Gutters on those roofs are required, so the stormwater enters the gravel wetland at the top of the system.

Results

The treatment system captures an equivalent area of 59.75% of the site exceeding the 50% requirement.

The site was modeled for peak flows. The gravel wetland provides peak flow control for the site. The results are shown in the table below. This shows a reduction in peak flows. It also shows the existing culvert capacity is exceeded in larger storms. The gravel bedding functions as the overflow system for the site. The stormwater system improves the discharge off site.

Table 1

	Existing	Developed
2 Year 3.1"	6.27	2.04
10 Year 4.6"	10.63	3.61
25 Year 5.8"	14.12	7.36

Conclusions

The construction of the 34,000 square foot storage building with the gravel wetland will have minimal effect on the downstream properties. The gravel wetland will provide improved water quality and reduce peak flows leaving the site.

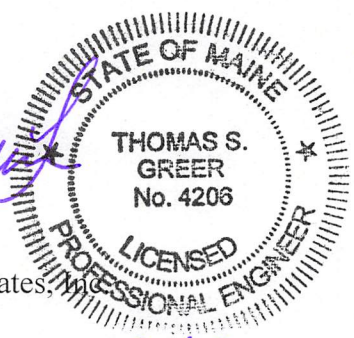

Thomas S. Greer, PE
Walsh Engineering Associates, Inc.

8/21/19

SUPPORTING DATA AND CALCULATIONS

The following material presents calculations and copies of source material used during the analysis for this study.

- Appendix A: Location Plan
- Appendix B: Pre- and Post-Development HydroCAD Output
- Appendix C: Inspections and Maintenance of Stormwater Facilities Plan
- Appendix D: Stormwater Maintenance Agreement
- Appendix E: Housekeeping Report
- Appendix F: Drainage Plans
    - D1.1 – Drainage Analysis Plans

Appendix A
Location Plan



GRAPHIC SCALE

2000 0 1000 2000

1 inch = 2000ft.

N

WALSH
ENGINEERING ASSOCIATES, INC.
One Karen Dr., Suite 2A | Westbrook, Maine 04092
ph: 207.553.9898 | www.walsh-eng.com

Copyright © 2019

PRESUMPSCOT STREET STORAGE FACILITY

293 PRESUMPSCOT STREET
PORTLAND, MAINE

Sheet Title: **LOCATION PLAN**

Job No.:	537
Date:	August 20, 2019
Scale:	AS SHOWN
Drawn:	RJS
Checked:	TSG

Appendix B
Pre- and Post-Development HydroCAD Output



EXISTING SITE SURFACE PLAN

N

GRAPHIC SCALE

60 0 30 60

1 inch = 60 ft.

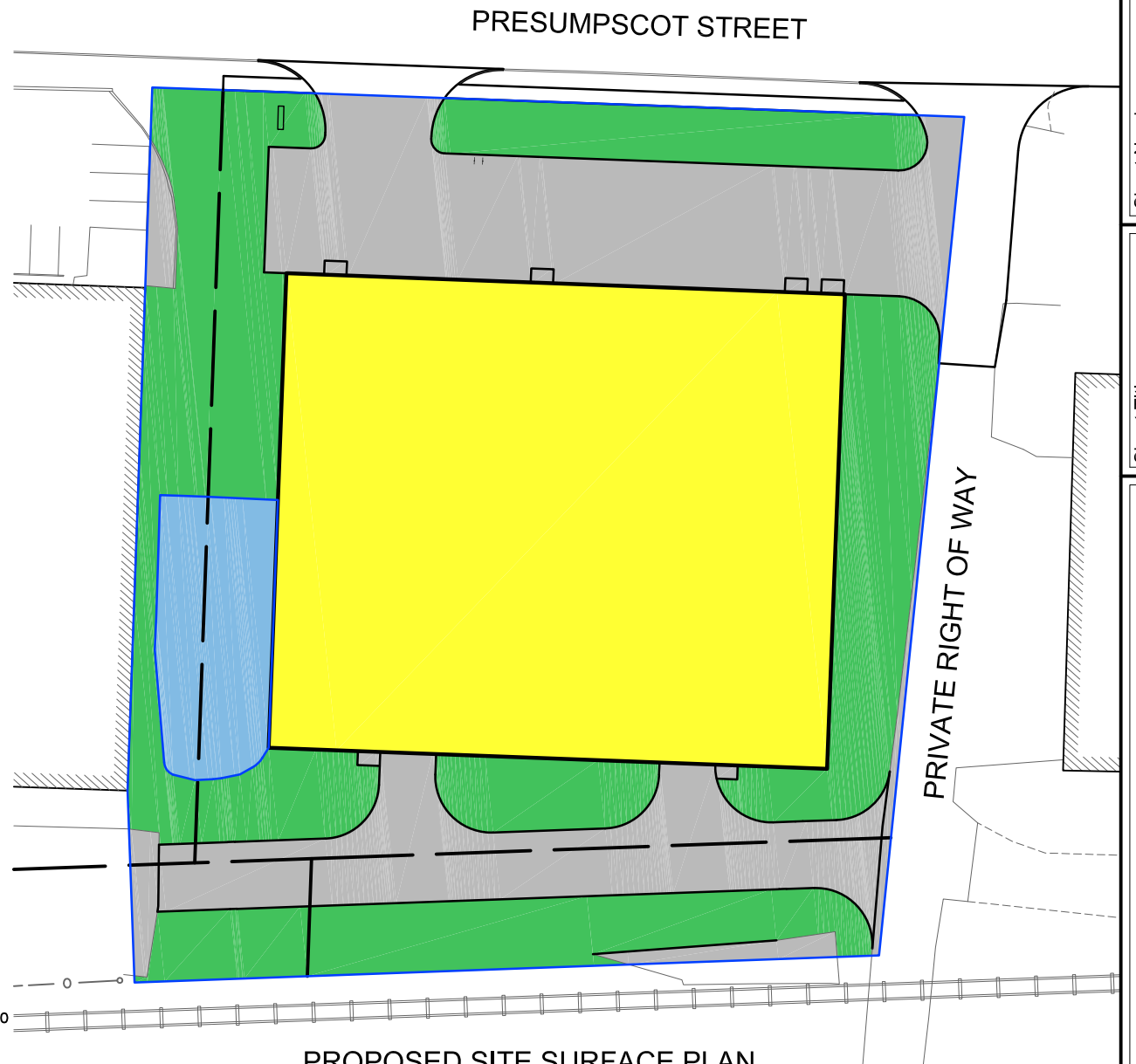

PROPOSED SITE SURFACE PLAN

WEIGHTED	RANKING	EXISTING	SURFACE	PROPOSED	RANKING	WEIGHTED
143,475	3	47,825 S.F.	GRAVEL	0 S.F.	3	0
420	3	140 S.F.	BUILDINGS	34,000 S.F.	3	102,000
18,783	3	6,261 S.F.	PAVEMENT	21,842 S.F.	3	65,526
6,477	3	2159 S.F.	RAILROAD BALLAST	0 S.F.	3	0
61,316	2	30,658 S.F.	LAWN	27,159 S.F.	2	54,318
0	1	0 S.F.	TREATMENT	4,042 S.F.	1	4,042
230,471		87,043 S.F.		87,043 S.F.		225,886

230,471 / 87,043 = 2.65

225,886 / 87,043 = 2.60

2.60 - 2.65 = - 0.05 = 50% TREATMENT REQUIRED

STATE OF MAINE
THOMAS S. GREER
No. 4206
LICENSED PROFESSIONAL ENGINEER
8/21/19

Sheet Number: R1

Sheet Title: POLLUTANT IMPACT RANKINGS

Job No.:	537
Date:	August 21, 2019
Scale:	AS SHOWN
Drawn:	JDC
Checked:	TSG

PORTLAND MOTOR CLUB
293 PRESUMPSCOT STREET
PORTLAND, MAINE

WALSH
ENGINEERING ASSOCIATES, INC.
One Karen Dr., Suite 2A | Westbrook, Maine 04092
ph: 207.553.9898 | www.walsh-eng.com

Copyright © 2019

P:\537 - 293 Presumpscot Street\3...CAD\537 - BASE.dwg plot date: 8/27/2019 2:10 PM

WALSH
ENGINEERING ASSOCIATES, INC.
One Karen Drive, Suite 2A | Westbrook, Maine 04092
phone 207.553.9898 | www.walsh-eng.com

JOB 537-293 PRESUMPSCOT ST
PREPARED BY TSG DATE 8/15/19
CHECKED BY _____ DATE _____
SHEET NO. 1 OF 1

GRAVEL WETLAND SIZING

IMPERVIOUS AREA 15,215 + 31,424 = 46,639

LAWN AREA 17,802

1" x 46,639/12 = 3,886 CF

0.4 x 17,802/12 = 1483 CF

TOTAL REQ 5,369 CF < 5,711 PROVIDED ok

5% 46,639 x 0.05 = 2,331 SF

2% 17,802 x 0.02 = 356 SF

TOTAL REQ 2,687 SqF < 3,393 PROVIDED ok

SMART RESOLUTION (888) 309-5297 Ref. No. G 0340195890

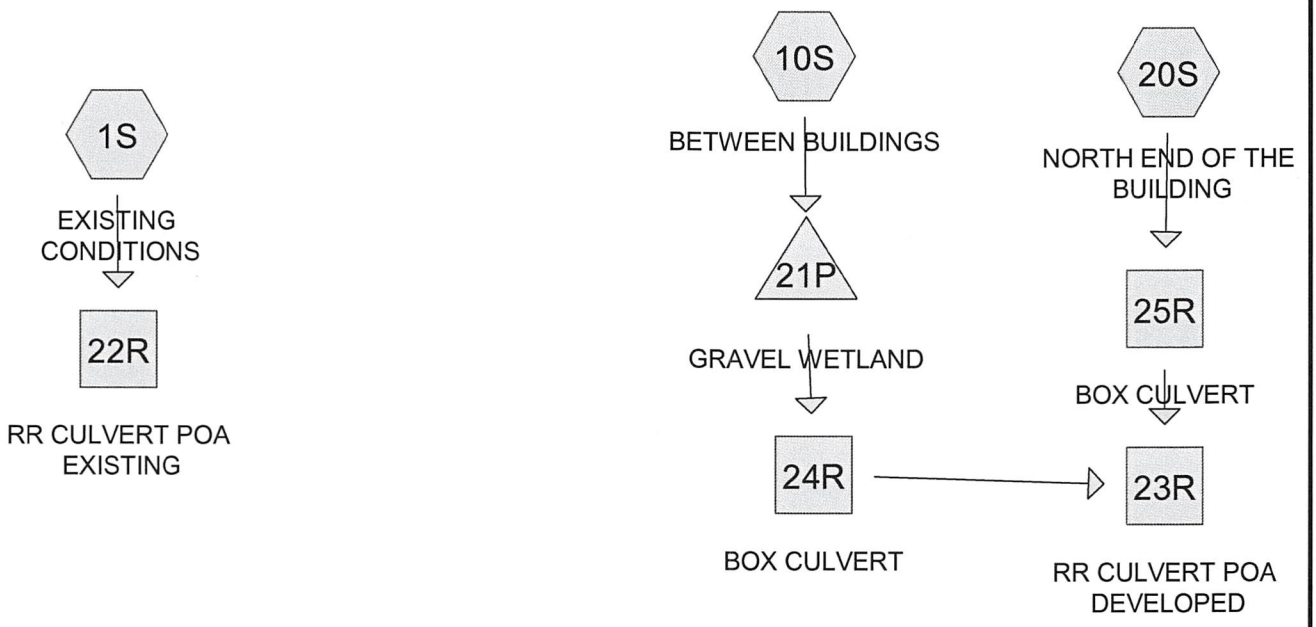

UP DATE FOR BOX CULVERT FLOWS

Subcat Reach Pond Link

Routing Diagram for PRESUMSCOT STORAGE TSG 8.15.19
Prepared by Walsh Engineering, Printed 11/6/2019
HydroCAD® 10.00-24 s/n 01454 © 2018 HydroCAD Software Solutions LLC

Time span=5.00-20.00 hrs, dt=0.05 hrs, 301 points
Runoff by SCS TR-20 method, UH=SCS, Weighted-CN
Reach routing by Stor-Ind+Trans method - Pond routing by Stor-Ind method

Subcatchment 1S: EXISTING Runoff Area=124,268 sf 27.85% Impervious Runoff Depth>1.79"
Flow Length=430' Tc=5.7 min CN=88 Runoff=6.27 cfs 0.425 af

Subcatchment 10S: BETWEEN BUILDINGS Runoff Area=64,441 sf 72.37% Impervious Runoff Depth>2.04"
Tc=5.0 min CN=91 Runoff=3.72 cfs 0.251 af

Subcatchment 20S: NORTH END OF THE Runoff Area=41,303 sf 49.54% Impervious Runoff Depth>1.56"
Tc=4.0 min CN=85 Runoff=1.95 cfs 0.123 af

Reach 22R: RR CULVERT POA Avg. Flow Depth=0.79' Max Vel=7.69 fps Inflow=6.27 cfs 0.425 af
15.0" Round Pipe n=0.010 L=15.0' S=0.0107 '/' Capacity=8.67 cfs Outflow=6.27 cfs 0.425 af

Reach 23R: RR CULVERT POA Avg. Flow Depth=0.41' Max Vel=5.73 fps Inflow=2.03 cfs 0.224 af
15.0" Round Pipe n=0.010 L=15.0' S=0.0107 '/' Capacity=8.67 cfs Outflow=2.02 cfs 0.224 af

Reach 24R: BOX CULVERT Avg. Flow Depth=0.00' Max Vel=2.64 fps Inflow=0.14 cfs 0.101 af
n=0.012 L=32.0' S=0.0078 '/' Capacity=7,044.05 cfs Outflow=0.14 cfs 0.100 af

Reach 25R: BOX CULVERT Avg. Flow Depth=0.03' Max Vel=3.96 fps Inflow=1.95 cfs 0.123 af
n=0.012 L=28.5' S=0.0175 '/' Capacity=10,555.78 cfs Outflow=1.93 cfs 0.123 af

Pond 21P: GRAVEL WETLAND Peak Elev=32.91' Storage=7,477 cf Inflow=3.72 cfs 0.251 af
Outflow=0.14 cfs 0.101 af

Total Runoff Area = 5.280 ac Runoff Volume = 0.799 af Average Runoff Depth = 1.82"
55.78% Pervious = 2.945 ac 44.22% Impervious = 2.335 ac

Time span=5.00-20.00 hrs, dt=0.05 hrs, 301 points
Runoff by SCS TR-20 method, UH=SCS, Weighted-CN
Reach routing by Stor-Ind+Trans method - Pond routing by Stor-Ind method

Subcatchment 1S: EXISTING Runoff Area=124,268 sf 27.85% Impervious Runoff Depth>3.10"
Flow Length=430' Tc=5.7 min CN=88 Runoff=10.63 cfs 0.737 af

Subcatchment 10S: BETWEEN BUILDINGS Runoff Area=64,441 sf 72.37% Impervious Runoff Depth>3.40"
Tc=5.0 min CN=91 Runoff=6.04 cfs 0.419 af

Subcatchment 20S: NORTH END OF THE Runoff Area=41,303 sf 49.54% Impervious Runoff Depth>2.82"
Tc=4.0 min CN=85 Runoff=3.48 cfs 0.223 af

Reach 22R: RR CULVERT POA Avg. Flow Depth=1.25' Max Vel=8.06 fps Inflow=10.63 cfs 0.737 af
15.0" Round Pipe n=0.010 L=15.0' S=0.0107 '/' Capacity=8.67 cfs Outflow=8.69 cfs 0.737 af

Reach 23R: RR CULVERT POA Avg. Flow Depth=0.56' Max Vel=6.69 fps Inflow=3.57 cfs 0.469 af
15.0" Round Pipe n=0.010 L=15.0' S=0.0107 '/' Capacity=8.67 cfs Outflow=3.56 cfs 0.469 af

Reach 24R: BOX CULVERT Avg. Flow Depth=0.04' Max Vel=2.64 fps Inflow=1.99 cfs 0.246 af
n=0.012 L=32.0' S=0.0078 '/' Capacity=7,044.05 cfs Outflow=2.00 cfs 0.246 af

Reach 25R: BOX CULVERT Avg. Flow Depth=0.05' Max Vel=3.96 fps Inflow=3.48 cfs 0.223 af
n=0.012 L=28.5' S=0.0175 '/' Capacity=10,555.78 cfs Outflow=3.44 cfs 0.223 af

Pond 21P: GRAVEL WETLAND Peak Elev=33.27' Storage=9,154 cf Inflow=6.04 cfs 0.419 af
Outflow=1.99 cfs 0.246 af

Total Runoff Area = 5.280 ac Runoff Volume = 1.379 af Average Runoff Depth = 3.13"
55.78% Pervious = 2.945 ac 44.22% Impervious = 2.335 ac

Time span=5.00-20.00 hrs, dt=0.05 hrs, 301 points
Runoff by SCS TR-20 method, UH=SCS, Weighted-CN
Reach routing by Stor-Ind+Trans method - Pond routing by Stor-Ind method

Subcatchment 1S: EXISTING Runoff Area=124,268 sf 27.85% Impervious Runoff Depth>4.19"
Flow Length=430' Tc=5.7 min CN=88 Runoff=14.12 cfs 0.996 af

Subcatchment 10S: BETWEEN BUILDINGS Runoff Area=64,441 sf 72.37% Impervious Runoff Depth>4.50"
Tc=5.0 min CN=91 Runoff=7.88 cfs 0.555 af

Subcatchment 20S: NORTH END OF THE Runoff Area=41,303 sf 49.54% Impervious Runoff Depth>3.88"
Tc=4.0 min CN=85 Runoff=4.72 cfs 0.306 af

Reach 22R: RR CULVERT POA Avg. Flow Depth=1.25' Max Vel=8.01 fps Inflow=14.12 cfs 0.996 af
15.0" Round Pipe n=0.010 L=15.0' S=0.0107 '/' Capacity=8.67 cfs Outflow=9.29 cfs 0.996 af

Reach 23R: RR CULVERT POA Avg. Flow Depth=0.88' Max Vel=7.92 fps Inflow=7.29 cfs 0.683 af
15.0" Round Pipe n=0.010 L=15.0' S=0.0107 '/' Capacity=8.67 cfs Outflow=7.29 cfs 0.683 af

Reach 24R: BOX CULVERT Avg. Flow Depth=0.10' Max Vel=2.64 fps Inflow=4.60 cfs 0.376 af
n=0.012 L=32.0' S=0.0078 '/' Capacity=7,044.05 cfs Outflow=4.58 cfs 0.376 af

Reach 25R: BOX CULVERT Avg. Flow Depth=0.07' Max Vel=3.96 fps Inflow=4.72 cfs 0.306 af
n=0.012 L=28.5' S=0.0175 '/' Capacity=10,555.78 cfs Outflow=4.66 cfs 0.306 af

Pond 21P: GRAVEL WETLAND Peak Elev=33.49' Storage=10,159 cf Inflow=7.88 cfs 0.555 af
Outflow=4.60 cfs 0.376 af

Total Runoff Area = 5.280 ac Runoff Volume = 1.857 af Average Runoff Depth = 4.22"
55.78% Pervious = 2.945 ac 44.22% Impervious = 2.335 ac

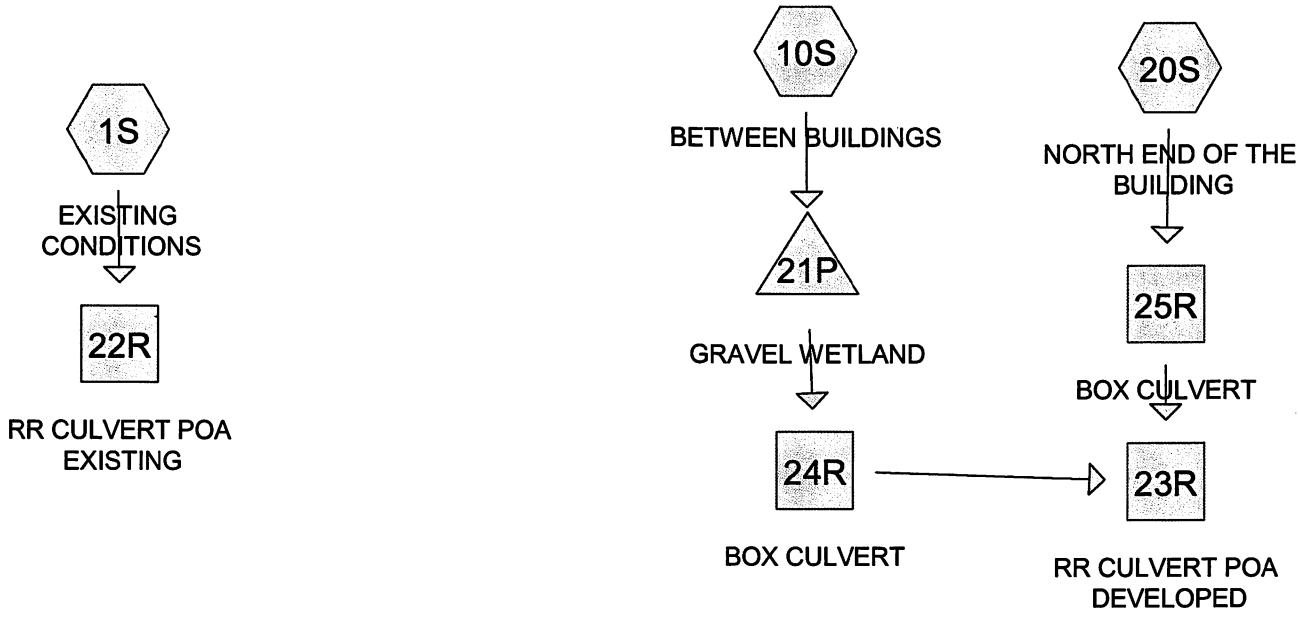

Subcat Reach Pond Link

Routing Diagram for PRESUMSCOT STORAGE TSG 8.15.19
Prepared by Walsh Engineering, Printed 11/6/2019
HydroCAD® 10.00-24 s/n 01454 © 2018 HydroCAD Software Solutions LLC

Summary for Subcatchment 1S: EXISTING CONDITIONS

[49] Hint: Tc<2dt may require smaller dt

Runoff = 14.12 cfs @ 12.08 hrs, Volume= 0.996 af, Depth> 4.19"

Runoff by SCS TR-20 method, UH=SCS, Weighted-CN, Time Span= 5.00-20.00 hrs, dt= 0.05 hrs
Type III 24-hr 25 YEAR Rainfall=5.80"

	Area (sf)	CN	Description
*	46,182	93	GRAVEL
*	20,050	98	PAVEMENT
*	14,564	98	BUILDINGS
*	4,640	93	RAILROAD
*	38,832	72	LANDSCAPED POOR
	124,268	88	Weighted Average
	89,654		72.15% Pervious Area
	34,614		27.85% Impervious Area

Tc (min)	Length (feet)	Slope (ft/ft)	Velocity (ft/sec)	Capacity (cfs)	Description
0.9	100	0.0500	1.95		**Sheet Flow, SHEET** Smooth surfaces n= 0.011 P2= 3.10"
0.8	140	0.0300	2.79		**Shallow Concentrated Flow, SHALLOW 1** Unpaved Kv= 16.1 fps
0.2	30	0.1500	2.71		**Shallow Concentrated Flow, SHALLOW 2** Short Grass Pasture Kv= 7.0 fps
3.8	160	0.0100	0.70		**Shallow Concentrated Flow, SHALLOW 3** Short Grass Pasture Kv= 7.0 fps
5.7	430	Total			

Summary for Subcatchment 10S: BETWEEN BUILDINGS

[49] Hint: Tc<2dt may require smaller dt

Runoff = 7.88 cfs @ 12.07 hrs, Volume= 0.555 af, Depth> 4.50"

Runoff by SCS TR-20 method, UH=SCS, Weighted-CN, Time Span= 5.00-20.00 hrs, dt= 0.05 hrs
Type III 24-hr 25 YEAR Rainfall=5.80"

	Area (sf)	CN	Description
*	15,215	98	PAVEMENT
*	31,424	98	BUILDINGS
*	17,802	72	LAWN
	64,441	91	Weighted Average
	17,802		27.63% Pervious Area
	46,639		72.37% Impervious Area

Tc (min)	Length (feet)	Slope (ft/ft)	Velocity (ft/sec)	Capacity (cfs)	Description
5.0					**Direct Entry, DIRECT**

Summary for Subcatchment 20S: NORTH END OF THE BUILDING

[49] Hint: Tc<2dt may require smaller dt

Runoff = 4.72 cfs @ 12.06 hrs, Volume= 0.306 af, Depth> 3.88"

Runoff by SCS TR-20 method, UH=SCS, Weighted-CN, Time Span= 5.00-20.00 hrs, dt= 0.05 hrs
Type III 24-hr 25 YEAR Rainfall=5.80"

	Area (sf)	CN	Description
*	680	92	DRIPSTRIP
*	20,460	98	PAVEMENT
*	20,163	72	LAWN POOR
	41,303	85	Weighted Average
	20,843		50.46% Pervious Area
	20,460		49.54% Impervious Area

Tc (min)	Length (feet)	Slope (ft/ft)	Velocity (ft/sec)	Capacity (cfs)	Description
4.0					**Direct Entry, DIRECT**

Summary for Reach 22R: RR CULVERT POA EXISTING

[52] Hint: Inlet/Outlet conditions not evaluated
[82] Warning: Early inflow requires earlier time span
[55] Hint: Peak inflow is 163% of Manning's capacity
[76] Warning: Detained 0.049 af (Pond w/culvert advised)

Inflow Area = 2.853 ac, 27.85% Impervious, Inflow Depth > 4.19" for 25 YEAR event
Inflow = 14.12 cfs @ 12.08 hrs, Volume= 0.996 af
Outflow = 9.29 cfs @ 12.02 hrs, Volume= 0.996 af, Atten= 34%, Lag= 0.0 min

Routing by Stor-Ind+Trans method, Time Span= 5.00-20.00 hrs, dt= 0.05 hrs
Max. Velocity= 8.01 fps, Min. Travel Time= 0.0 min
Avg. Velocity = 3.66 fps, Avg. Travel Time= 0.1 min

Peak Storage= 18 cf @ 12.05 hrs
Average Depth at Peak Storage= 1.25'
Bank-Full Depth= 1.25' Flow Area= 1.2 sf, Capacity= 8.67 cfs

15.0" Round Pipe
n= 0.010
Length= 15.0' Slope= 0.0107 '/'
Inlet Invert= 26.15', Outlet Invert= 25.99'

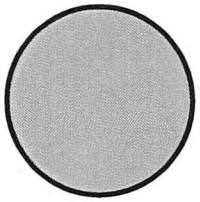

Summary for Reach 23R: RR CULVERT POA DEVELOPED

[52] Hint: Inlet/Outlet conditions not evaluated

Inflow Area = 2.428 ac, 63.45% Impervious, Inflow Depth > 3.38" for 25 YEAR event
Inflow = 7.29 cfs @ 12.14 hrs, Volume= 0.683 af
Outflow = 7.29 cfs @ 12.14 hrs, Volume= 0.683 af, Atten= 0%, Lag= 0.1 min

Routing by Stor-Ind+Trans method, Time Span= 5.00-20.00 hrs, dt= 0.05 hrs
Max. Velocity= 7.92 fps, Min. Travel Time= 0.0 min
Avg. Velocity = 3.22 fps, Avg. Travel Time= 0.1 min

Peak Storage= 14 cf @ 12.14 hrs
Average Depth at Peak Storage= 0.88'
Bank-Full Depth= 1.25' Flow Area= 1.2 sf, Capacity= 8.67 cfs

15.0" Round Pipe
n= 0.010
Length= 15.0' Slope= 0.0107 '/'
Inlet Invert= 26.15', Outlet Invert= 25.99'

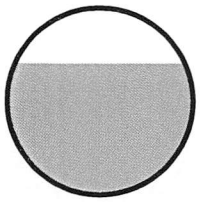

Summary for Reach 24R: BOX CULVERT

Inflow Area = 1.479 ac, 72.37% Impervious, Inflow Depth > 3.05" for 25 YEAR event
Inflow = 4.60 cfs @ 12.19 hrs, Volume= 0.376 af
Outflow = 4.58 cfs @ 12.20 hrs, Volume= 0.376 af, Atten= 1%, Lag= 0.6 min

Routing by Stor-Ind+Trans method, Time Span= 5.00-20.00 hrs, dt= 0.05 hrs
Max. Velocity= 2.64 fps, Min. Travel Time= 0.2 min
Avg. Velocity = 2.64 fps, Avg. Travel Time= 0.2 min

Peak Storage= 56 cf @ 12.19 hrs
Average Depth at Peak Storage= 0.10'
Bank-Full Depth= 12.00' Flow Area= 216.0 sf, Capacity= 7,044.05 cfs

18.00' x 12.00' deep channel, n= 0.012 Concrete pipe, finished
Length= 32.0' Slope= 0.0078 '/'
Inlet Invert= 29.00', Outlet Invert= 28.75'



Summary for Reach 25R: BOX CULVERT

Inflow Area = 0.948 ac, 49.54% Impervious, Inflow Depth > 3.88" for 25 YEAR event
Inflow = 4.72 cfs @ 12.06 hrs, Volume= 0.306 af
Outflow = 4.66 cfs @ 12.06 hrs, Volume= 0.306 af, Atten= 1%, Lag= 0.2 min

Routing by Stor-Ind+Trans method, Time Span= 5.00-20.00 hrs, dt= 0.05 hrs
Max. Velocity= 3.96 fps, Min. Travel Time= 0.1 min
Avg. Velocity = 3.96 fps, Avg. Travel Time= 0.1 min

Peak Storage= 34 cf @ 12.06 hrs
Average Depth at Peak Storage= 0.07'
Bank-Full Depth= 12.00' Flow Area= 216.0 sf, Capacity= 10,555.78 cfs

18.00' x 12.00' deep channel, n= 0.012 Concrete pipe, finished
Length= 28.5' Slope= 0.0175 '/'
Inlet Invert= 28.75', Outlet Invert= 28.25'



Summary for Pond 21P: GRAVEL WETLAND

[82] Warning: Early inflow requires earlier time span

Inflow Area = 1.479 ac, 72.37% Impervious, Inflow Depth > 4.50" for 25 YEAR event
Inflow = 7.88 cfs @ 12.07 hrs, Volume= 0.555 af
Outflow = 4.60 cfs @ 12.19 hrs, Volume= 0.376 af, Atten= 42%, Lag= 7.0 min
Primary = 4.60 cfs @ 12.19 hrs, Volume= 0.376 af

Routing by Stor-Ind method, Time Span= 5.00-20.00 hrs, dt= 0.05 hrs
Peak Elev= 33.49' @ 12.19 hrs Surf.Area= 4,754 sf Storage= 10,159 cf

Plug-Flow detention time= 131.5 min calculated for 0.376 af (68% of inflow)
Center-of-Mass det. time= 62.4 min (815.8 - 753.4)

Volume	Invert	Avail.Storage	Storage Description
#1	31.00'	12,661 cf	**Custom Stage Data (Prismatic)** Listed below (Recalc)

Elevation (feet)	Surf.Area (sq-ft)	Inc.Store (cubic-feet)	Cum.Store (cubic-feet)
31.00	3,393	0	0
32.00	3,939	3,666	3,666
32.50	4,240	2,045	5,711
33.00	4,520	2,190	7,901
34.00	5,000	4,760	12,661

Device	Routing	Invert	Outlet Devices
#1	Primary	31.00'	**2.0" Vert. Orifice/Grate** C= 0.600
#2	Primary	33.00'	**5.0' long x 2.0' breadth Broad-Crested Rectangular Weir** Head (feet) 0.20 0.40 0.60 0.80 1.00 1.20 1.40 1.60 1.80 2.00 2.50 3.00 3.50 Coef. (English) 2.54 2.61 2.61 2.60 2.66 2.70 2.77 2.89 2.88 2.85 3.07 3.20 3.32

Primary OutFlow Max=4.56 cfs @ 12.19 hrs HW=33.48' (Free Discharge)
↑—**1=Orifice/Grate** (Orifice Controls 0.16 cfs @ 7.46 fps)
└—**2=Broad-Crested Rectangular Weir** (Weir Controls 4.39 cfs @ 1.82 fps)

Appendix C
Inspection and Maintenance of Stormwater Facilities

Inspection and Maintenance Plan
For Stormwater Management Facilities
293 Presumpscot Street
Portland, Maine

August 2019

Stormwater Management Facilities include swales, ditches, paved surfaces, catch basins, drain manholes, drain pipe, riprapped aprons, pretreatment devices and infiltration chambers. Periodic inspection and maintenance of these site features and devices is necessary to prevent erosion, protect roadways and other paved areas and remove pollutants from stormwater runoff. The maintenance of all stormwater measures, the establishment of any contract services required to implement the program, and the keeping of records and maintenance log book will be the responsibility of the Owner.

The owner will be responsible for the inspection and maintenance of all stormwater management facilities, the establishment of any contract services required to implement the program, and the keeping of records and maintenance log book as described herein. At a minimum, the appropriate and relevant activities for each of the stormwater management facilities should be performed on the prescribed schedule. Periodic inspection and maintenance of these site features and devices is necessary to prevent erosion and remove pollutants from stormwater runoff.

POST CONSTRUCTION MONITORING:

32-38. Post-construction stormwater management plan compliance.

Any person owning, operating, or otherwise having control over a BMP required by a post Construction stormwater management plan shall maintain the BMPs in accordance with the approved plan and shall demonstrate compliance with that plan as follows:

(a) Inspections. The owner or operator of a BMP shall hire a qualified post-construction stormwater inspector to at least annually, inspect the BMPs, including but not limited to any parking areas, catch basins, drainage swales, detention basins and ponds, pipes and related structures, in accordance with all municipal and state inspection, cleaning and maintenance requirements of the approved post-construction stormwater management plan.

(b) Maintenance and repair. If the BMP requires maintenance, repair or replacement to function as intended by the approved post-construction stormwater management plan, the owner or operator of the BMP shall take corrective action(s) to address the deficiency or deficiencies as soon as possible after the deficiency is discovered and shall provide a record of the deficiency and corrective action(s) to the department of public services ("DPS") in the annual report.

(c) Annual report. The owner or operator of a BMP or a qualified post-construction stormwater inspector hired by that person, shall, on or by June 30 of each year, provide a completed and signed certification to DPS in a form provided by DPS, certifying that the person has inspected the BMP(s) and that they are adequately maintained and

functioning as intended by the approved post-construction stormwater management plan, or that they require maintenance or repair, including the record of the deficiency and corrective action(s) taken.

(d) Filing fee. Any persons required to file and annual certification under this section shall include with the annual certification a filing fee established by DPS to pay the administrative and technical costs of review of the annual certification.

(e) Right of entry. In order to determine compliance with this article and with the post-construction stormwater management plan, DPS may enter upon property at reasonable hours with the consent of the owner, occupant or agent to inspect the BMPs.

(Ord. No. 35-09/10, 8-17-09)

This site has one system, a gravel wetland that requires inspections and maintenance. It is detailed on the full set of plans for the project. The inspector and maintenance company should be fully knowledgeable about the system. Contact Walsh Engineering Associates, Inc. for a full set of plans.

SWALES, DITCHES AND PAVED SURFACES:

Swales, ditches and paved surfaces conditions should be assessed during and/or after significant rainfall events such as thundershowers, periods of heavy or extended rainfall and significant snowmelt. Any damage or unusual condition such as sedimentation of a ditch, erosion, damaged pavement or dying vegetation should be recorded, dated and initialed by the inspector when observed. Even if there is no visible damage, the inspector should make record of these inspections at least twice annually.

Paved surfaces should be visually inspected monthly during the winter. The inspector should pay particular attention to the build up of ice and sand and remove accumulations that block the free flow of surface runoff to catch basins and pre-treatment devices. Paved areas should be swept at least once annually. The date and initials of the inspector should be recorded on the forms provided as well as a notation of any cleanup effort that was made.

GRAVEL WETLAND:

- Monitoring and replanting, as warranted, of wetland vegetation.
- Removal of debris from inlet and outlet structures.
- Inspection and removal of sediment accumulation in the gravel bed.
- Depending on sediment accumulation, bed may require periodic replacement and replanting.
- Inspection and repair of containment structure (if applicable), inlet and outlet structures, and appurtenances.

MAINTENANCE: Operation and maintenance requirements similar to those for underdrained filter basins should be expected. The plant biomass should be harvested annually, and accumulated sediment removed at intervals of 5-10 years. These activities may disrupt the wetlands system and may require some vegetation re-establishment. The riser pipes may clog and

will require annual clean-out (It should be done in the winter time when one can walk on the wetland).

First Year Post Construction: Inspection frequency should occur after every major storm in the first year following construction.

- Inspect that the system drains within 24-48 hours.
- The plants may need watering if necessary during the first growing season. Revegetate if the vegetation is poorly establishing.
- Identify areas of erosion and make timely repairs.
- Check all inlets, outlets and subdrains for proper functioning. Risers may need to be cleaned.

Post Construction: Inspection frequency should occur at lease every 6 months and after every major storm. Activities are expected to include:

- Check the basin for a dense root mat establishment of wetland vegetation.
- Check and clean the risers if there is evidence of standing water, discolored water or accumulated sediments in the cells.
- Check and clean the forebay for sediments, trash and debris. When sediments have accumulated to a depth of 12 inches, standing water is persistent or wetland vegetation become established, the forebay will need to be excavated and reformed.
- Verify that the cells drain within 24-48 hours. Sediment will need to be removed when an accumulation of 4 inches is evident over the wetland surface.
- Check and clean all outlets and overflow spillway if blocked or there is evidence of structural damage or erosion.
- Remove decaying vegetation, litter and debris.
- Check for foreign species. Particular care must be used to avoid the unintended introduction of invasive species such as purple loosetrife (Lythrum Salicaria) and common reed (Phragmites Australis). It is recommended that a qualified wetland biologist be consulted when these are found in the area of the gravel wetland.

- If an infiltration system does not drain within 72-hours following a rainfall event, then a qualified professional should assess the condition of the facility to determine measures required to restore infiltration function, including but not limited to removal of accumulated sediments or reconstruction of the infiltration system.
- Inspect the infiltration ports 48 to 72 hours after a significant rain storm to determine if they system is draining.

293 PRESUMPSCOT STREET
PORTLAND, MAINE

INSPECTION / MAINTENANCE LOG

SWALES, DITCHES AND PAVED SURFACES

I: INSPECTED - C: CLEANED - R: REPAIRED

DATE	INITIALS	ACTION	COMMENT
8/20/19	JKL	I, C	EXAMPLE: Called New England Basin Cleaners to clean treatment device.

293 PRESUMPSCOT STREET
PORTLAND, MAINE

INSPECTION / MAINTENANCE LOG

GRAVEL WETLAND

I: INSPECTED - C: CLEANED - R: REPAIRED

DATE	INITIALS	ACTION	COMMENT
8/20/19	JKL	I, C	EXAMPLE: Called New England Basin Cleaners to clean treatment device.

STORMWATER MANAGEMENT SYSTEM
MAINTENANCE PROGRAM
SUMMARY CHECKLIST

Item	Commentary	Frequency			
		Month	Semi-Annual	Annual	Long-Term
Open Swale, Ditches & Inlet Structures	Inspect for debris accumulation, erosion and excessive vegetation. Mow monthly, remove debris, repair and revegetate any area of erosion	**X Mow**		**X**	
Pavement	Review for damage and buildup of debris and sand.	**X**	**X Sweep**		
Gravel Wetland	Inspect grates to assure optimum water flows into the structures. Inspect sump and casco traps for blockage and sediment accumulation. Clean out sumps.	**X Inspect**		**X Sediment removal**	

Appendix D
Stormwater Maintenance Agreement

STORMWATER DRAINAGE SYSTEM
MAINTENANCE AGREEMENT

IN CONSIDERATION OF the site plan approval granted by the Planning Board/Planning Authority of the City of Portland to the proposed Presumpscot Street Storage Facility, and the associated Grading, Drainage & Erosion Control Plan (*insert correct name of plan)* (Exhibit A) submitted by Waldron Realty, LLC, prepared by Walsh Engineering Associates, Inc., of One Karen Drive, Suite 2A, Westbrook, Maine 04092, dated_____, and pursuant to a condition thereof, Waldron Realty LLC a Maine limited liability company with a principal place of business in Portland, Maine, and having a mailing address of 178 US Route One, Falmouth, Maine, 04105, the owner of the subject premises, does hereby agree, for itself, its successors and assigns (the "Owner"), as follows:

Maintenance Agreement

That it, its successors and assigns, will, at its own cost and expense and at all times in perpetuity, maintain in good repair and in proper working order the Gravel Wetland, (hereinafter collectively referred to as the "stormwater system"), as shown on the _____Plan in Exhibit A and in strict compliance with the approved Inspection and Maintenance Plan for Stormwater Management Facilities prepared for the Owner by Walsh Engineering Associates, Inc., (copy attached at Exhibit B) and Chapter 32 of the Portland City Code.

Owner of the subject premises further agrees, at its own cost, to keep a Stormwater Maintenance Log. Such log shall be made available for inspection by the City of Portland upon reasonable notice and request.

Said agreement is for the benefit of the said City of Portland and all persons in lawful possession of said premises and abutters thereto; further, that the said City of Portland and said persons in lawful possession may enforce this Agreement by an action at law or in equity in any court of competent jurisdiction; further, that after giving the Owner written notice and a stated time to perform, the said City of Portland, by its authorized agents or representatives, may, but is not obligated to, enter upon said premises to maintain, repair, or replace said stormwater system in the event of any failure or neglect thereof, the cost and expense thereof to be reimbursed in full to the said City of Portland by the Owner upon written demand. Any funds owed to the City under this paragraph shall be secured by a lien on the property.

This Agreement shall also not be construed to allow any change or deviation from the requirements of the site plan most recently and formally approved by the Planning Board/Planning Authority of the City of Portland.

This agreement shall bind the undersigned only so long as it retains any interest in said premises, and shall run with the land and be binding upon the Owner's successors and assigns as their interests may from time to time appear.

The Owner agrees to record a copy of this Agreement in the Cumberland County Registry of Deeds within thirty (30) days of final execution of this Agreement. The Owner further agrees to provide a copy of this Agreement to any Condominium Association or management company, and to any successor or assign and to forward to the City an Addendum signed by any successor or assign in which the successor or assign states that the successor or assign has read the Agreement, agrees to all its terms and conditions and the successor or assign will obtain and forward to the City's Department of Public Services and Department of Planning and Urban Development a similar Addendum from any other successor or assign.

For the purpose of this agreement and release "Owner" is any person or entity who is a successor or assign and has a legal interest in part, or all, of the real estate and any building. The real estate shown by chart, block and lot number in the records on file in the City Assessor's office shall constitute "the property" that may be entered by the City and liened if the City is not paid all of its costs and charges following the mailing of a written demand for payment to the owner pursuant to the process and with the same force and effect as that established by 36 M.R.S.A. §§ 942 and 943 for real estate tax liens.

Any written notices or demands required by the agreement shall be complete on the date the notice is attached to one or more doors providing entry to any buildings and mailed by certified mail, return receipt requested or ordinary mail or both to the owner of record as shown on the tax roles on file in the City Assessor's Office.

If the property has more than one owner on the tax rolls, service shall be complete by mailing it to only the first listed owner. The failure to receive any written notice required by this agreement shall not prevent the City from entering the property and performing maintenance or repairs on the stormwater system, or any component thereof, or liening it or create a cause of action against the City.

Dated at Portland, Maine this_____day of_____, 2019.

_____
(*name of company*)

_____
(*representative of owner, name and title*)

STATE OF MAINE
CUMBERLAND, ss. Date: _____

Personally appeared the above-named_____(*name and title*), and acknowledged the foregoing instrument to be his free act and deed in his said capacity.

Before me,

_____
Notary Public/Attorney at Law

Print name: _____

Exhibit A: Approved Grading and Drainage Plan *(name of the plan showing the Stormwater System in detail)*

Exhibit B: Approved Inspection and Maintenance Plan for Stormwater Management Facilities Agreement

Appendix E
Housekeeping Report

WALSH
ENGINEERING ASSOCIATES, INC.

HOUSEKEEPNG REPORT

293 PRESUMPSCOT STREET
PORTLAND, MAINE

August 2019

Housekeeping: The developer is responsible for notifying the contractor and owner of the housekeeping standards.

1. Spill Prevention: The contractor and owners need to take care with construction and waste materials such that contaminates do not enter the stormwater. The storage of materials such as paint, petroleum products, cleaning agents and the like are to be stored in watertight containers. The use of the products should be in accordance with manufacturer recommendations. When fueling equipment, including snowblowers and lawnmowers, have oil absorbent pads available below the fueling.

   Staging areas are noted on the plans for the contractor's use. Refueling of small engines by the owner should occur in the garage or on a paved surface.

   Any spill or release of toxic or hazardous substances must be reported to the Department. For oil spills, call 1-800-482-0777 which is available 24 hours a day. For spills of toxic or hazardous material, call 1-800-452-4664 which is available 24 hours a day. For more information, visit the Department's website at:
   http:/www.maine.gov/dep/spills/emergspillresp/

2. Groundwater Protection: Protection of the groundwater is required by the contractor and owner. Petroleum products should be stored in manufactured cans designed for the purpose. Spill preventions procedures should be followed.

3. Fugitive Sediment and Dust: The contractor is required to minimize dust from the construction operation. The road should be swept regularly (weekly) and prior to any rain event. The gravel areas are to be watered regularly to minimize dust. Any mud that is tracked off site should be cleaned up prior to it drying and becoming a dust issue.

   Do not use oil to control dust.

   Dewatering a stream without a permit from the Department may violate state water quality standards and the Natural Resources Protection Act.

4. Debris and Other Materials: Construction materials and construction debris should be covered to prevent rainwater from washing contaminants off the site. Any fertilizers, cleaning products,

herbicides should be protected from the weather and used in accordance with manufacturers recommendations.

Note any contaminants that are washed off the site by rainwater is a violation of the Clean Waters Act.

Storage Handling and Disposal of Solid Waste items must comply with Maine's Solid Waste Management Rules. Lack of appropriate pollutant control may result in violations of the Groundwater Quality Standards.

This project has a written Erosion Control Plan and Stormwater Maintenance Plan. Modifications to the plan must be approved by the City.

Maintenance of stormwater treatment and control systems must occur regularly. The Stormwater Maintenance Report provides inspection details and time lines for doing the inspections and reporting to the City and DEP.

Appendix F
Drawings
D1.1 – Drainage Analysis Plans

Att. N

Ameriprise Financial

Christopher N. Robinson
Financial Advisor
Vice President

Ameriprise Financial Services, Inc.
Two Portland Sq
Ste 700
Portland, ME 04101-4088
Tel: 207.228.2648
Toll Free: 877.744.0012
Fax: 207.761.5838
christopher.robinson@ampf.com
ameripriseadvisors.com/christopher.robinson

September 10, 2019

To whom it may Concern:

I am delighted to write this letter on behalf of William G. Waldron Jr. Bill has been a friend for over 25 years. I consider him to be a respectable businessman and a great friend. After spending over 25 years in his company I have come to realize how hardworking, thoughtful and honest he is overall.

Bill has been a client of mine for over 20 years and a client of Ameriprise Financial since 2015. I can confirm that Bill has in excess of $2,000,000 in assets under management at the firm and is part of the Wealth Management Group.

I am confidant Bill will accomplish what he plans on doing, and I recommend him without reservation.

If you require any other additional information, please feel free to contact me at the above phone number or email address.

Sincerely,

Christopher N. Robinson
Financial Advisor
Vice President

Products from Columbia Threadneedle Investments are offered by affiliates of Ameriprise Financial Services, Inc. Investment advisory products and services are made available through Ameriprise Financial Services, Inc., a registered investment adviser. Ameriprise Financial Services, Inc. Member FINRA and SIPC.

100%

WALSH
ENGINEERING ASSOCIATES, INC.

Construction Management Plan
293 Presumpscot Street

Construction Management Plans shall depict the overall planning, coordination, and control of a construction site, including phases as applicable, from beginning to completion. The City's goal for a construction management plan is to support a safe construction site and protect the public safety, accessibility (including preserving accessible pedestrian, bicycle, and vehicular modes of transport throughout the city), and welfare during construction. In addition, the construction management plan shall minimize construction impacts in their duration and magnitude to the surrounding area and develop an effective communication process for resolving concerns and conflicts.

The Construction Management Plan will be submitted as part of the Site Plan Review and it shall address the construction logistics for a project. The Construction Management Plan shall include the following submissions:

1) a construction management site plan;
2) a construction schedule (time frame); and
3) a written narrative addressing the categories below.

A. Construction Management Principles

The construction of 293 Presumpscot Street should happen in an orderly fashion, maximizing safety for pedestrians and workers. It shall minimize dust, noise and vibrations that may be obnoxious to neighbors.

B. Development Review of Construction Management Plan

The planning authority and department of public works will review this plan during the Level III approval process. Prior to construction the plan will be updated by the contractor and made more specific.

C. Performance Guarantees, Inspection Fees, Preconstruction Meeting, and Permits

Prior to scheduling a preconstruction meeting and the issuance of any city required permits, Applicant and Contractor shall meet all of the requirements contained in Section 14-530.
Development review fees and post approval requirements and 14-532. General requirements and enforcement of Portland's Land Use Code.

Other permits, as applicable, include

1. **Street Opening and Street Occupancy Permits:** Construction activity in the public right-of-way are controlled by Chapter 25 and sewer and stormwater system connections are controlled by Chapters 24 and 32 of the Land Use Code. All required permits shall be obtained through the Department of Public Works and the requests shall conform with the approved construction management plan.
2. **Blasting:** Blasting, if required, shall conform with all measures of Article VIII. Regulation of Explosives in the Land Use Code and Section 3.7 Standards for Blasting and Regulation of Explosives in Portland's Technical Manual.
3. **Building Code:** Employ the best practices, as applicable, of Chapter 33 Safeguards During Construction, from the 2009 International Building Code.

D. Construction Administration and Communication

Applicant and Contractor will work diligently to implement a communication strategy as outlined below. The communication strategy is intended to ensure that all construction operations are performed in accordance with all agreements, ordinances and special permits applicable to this project. The Construction Manager will work closely with adjacent abutters, businesses, nearby construction sites, and all parties informed, as far in advance as possible, of scheduled work, particularly work anticipated to cause significant noise, vibrations, or dust. The final construction management plan shall provide for the following:

1. Contact Person and contact information for the contractor and who is available 24 hours
2. Construction Signage posted on the site with Contact Information for Contractor
3. Describe any additional communication strategies
4. All construction site signage is temporary and shall be removed at project completion.

E. Construction Schedule

1. The contractor shall submit a schedule or time line for the construction project, including any Phasing.
2. Hours of Construction. Construction may occur during the daytime hours as defined in Section 17-18. Construction Activities for Building permit and Section 25-129. Noise, dust and debris.
3. Extended Hours or Night Work: Pursuant to Section 17-18, this section not apply to emergency utility work or "Situations where the public works authority or the office of building inspections determines that the construction activity is of a unique character which cannot reasonably be completed or performed during the permitted hours and which is not of a recurring nature, provided that prior to engaging in such activity the contractor or his representatives gives notice of the time and scope of such proposed activity, the notice to be given in a manner approved by the public works authority."
4. Material Deliveries: Schedule and designated location for delivery of materials and boxed goods.

F. Security & Public Safety

1. The Construction Management Plan will depict all proposed fencing or other barriers and access gates with the intent of separating pedestrian and vehicle circulation from the construction site.
2. Structures undergoing construction, alteration, or demolition operations, including those in underground locations, shall comply with NFPA 1 Chapter 16. Safeguarding Construction, Alteration, and Demolition Operations.
3. Fire Safety Program. An overall construction of demolition fire safety program shall be developed. Essential items to be emphasized include the following:
    - Good Housekeeping
    - On-site security
    - Installation of new fire protection systems as construction progresses
    - Preservation of existing systems during demolition
    - Organization and training of an on-site fire brigade
    - Development of a pre-fire plan with the local fire department
    - Rapid communication
    - Consideration of special hazards resulting from previous occupancies
    - Protection of existing structures and equipment from exposure fires resulting from construction, alteration, and demolition operations

4. Blasting, if required, shall conform with all measures of Article VIII. Regulation of Explosives in the Land Use Code and Section 3.7 Standards for Blasting and Regulation of Explosives in Portland's Technical Manual.
5. Any proposed temporary security lighting shall be shown on CMP and all fixtures shall be full cutoffs.

G. Construction Permitting and Traffic Control Plans

1. Construction Activity in Public Streets: Construction activity in the public right-of- way is controlled by Chapter 25 Article VII of the City Code of Ordinances. Required licenses and permits, restrictions on activity, and fees & area are outlined in that Chapter. Rules and Regulations for Excavation Activity are available through the Street Opening Clerk at the Department of Public Works. At no time can construction activity including delivery vehicles close or block streets or affect public safety access without prior notice and approval of the Department of Public Works.
2. Sewer and Stormwater: Sewer and stormwater water system connections are controlled by Chapters 24 and 32 of the City Code of Ordinance. Required permits for new connections and/or abandonment of existing connections are available through the Street Opening Clerk at the Department of Public Works. Rules and Regulations for these utility systems are available through the City Engineer's office of the Department of Public Works and in Section II of the Technical Manual.

3. Traffic Control Plans: Construction activity that impacts the existing public street system must be controlled to protect the safety of the construction workers and all modes of the traveling public. Projects are required to submit a satisfactory 'maintenance of traffic" (MOT) plan prior to any site plan, subdivision, or street opening permit approval. MOT plans may be required for projects that have impacts on local streets.

   Maintenance of Traffic (MOT) plans shall provide for the safe passage of the public through or along the construction work zone. On a case-by-case basis, applicants may be allowed to close a street and/or detour a mode of traffic when absolutely necessary for safety. MOT plans shall employ the appropriate techniques and devices as called for in the latest edition of the Manual on Uniform Traffic Control Devices (MUTCD). In addition:

   - Construction speed signing may be used as needed to slow traffic
   - Traffic Control signs shall not be placed where they are an obstruction to bicycles or pedestrians.
   - In some situations, flaggers may be required.
   - Police details may be required at lighted intersections and may be requested by the City's transportation engineer or his designee.

   All existing modes of travel in work zone area shall be accommodated if impacted by the activity. The safe passage of pedestrians, bicyclists, transit providers, and motorists are of equal importance when planning out the work zone; no pre-existing travel mode may be eliminated without the express approval of the Department of Public Works. The MOT should also address on-street parking impacts, including deliveries and parking for adjoining businesses and property owners, analysis of roadway capacity or diversion

capacity if street closure or change to roadway capacity is required, and coordination with other on-going or future construction or utility projects in the vicinity.

- Traffic control of bicycle and pedestrian facilities or routes through work zones shall be maintained until the bicycle and pedestrian facilities or routes are ready for safe operation. Traffic control will not be removed to allow auto travel at the expense of bicycle and pedestrians.
- Barrier systems utilized to separate the construction activity from the public street and /or sidewalk shall not inhibit sight distances, particularly for visibility of pedestrians and bicyclists.
- ADA compliance shall be maintained.

Use of public parking spaces or the blockage of any portion of sidewalk for the purpose of construction activity shall require an occupancy permit and appropriate fee as assessed by the Department of Public Works.

H. Site Management and Controls

The final Construction Management Plan will address maintaining the site in a safe condition and will include the following:

1. Regular trash and debris removal
2. Street cleaning and damage controls
3. Dust controls- The construction shall comply with Portland's requirements under Section 25-129 on Noise, dust and debris.
4. Noise: The construction shall comply with Portland's requirements under Section 17- 18 of the City Code and Section 25-129 on Noise, dust and debris.
5. Rodent Control will be provided, if applicable, by a professional exterminator and consistent with Chapter 22 of the City Code.
6. Snow Removal: Pursuant to Section 25-173 Contractors to ensure a safe means of travel within the work zone.
    1) Snow/ice removal or commence automatically from (1" of snow and up) or Ice
    2) Remove snow as needed within the work zone, including parking spaces & not to block any driveways or sight lines with the piles of snow.
    3) Clear all walks & ramps with the work zone
    4) Sand or Salt as needed
    5) Clear all basin or drainage to help snow melt
    6) This would include Monday-Friday Sat/Sunday/Holidays

I. Erosion Control and Preservation of Trees

1. The contractor shall install all erosion and sedimentation controls as depicted on the approved erosion and sedimentation control plan prior to the pre-construction meeting for inspection by the City. The contractor shall regularly inspect the control measures, no less than weekly and after significant storm events, and maintain any installed temporary or permanent stormwater management systems in working order. The contractor shall document all inspection activities and corrective actions and be prepared to provide these documents for inspection by the City, Maine Department of Environmental Protection or the U.S. Environmental Protection Agency upon request.
2. The contractor shall maintain all tree and landscaping preservation measures as depicted on the landscaping plan (Exhibit) within the area of construction.

3. The storage of materials shall be identified and avoid being located under/near trees.

J. Construction Staging Area

1. The Construction Management Plan shall depict location of the material staging areas, the location on onsite temporary construction trailers, the location on onsite truck delivery holding areas, the location onsite truck washing stations, masonry mixing stations, the general location of the construction security fence and the general location of temporary construction dumpsters. An open storage areas shall be shown on the plan.
2. Delivery Truck Holding Areas On-Site: The delivery holding area shall be shown on the plan and shall not be blocked during construction. On days when the construction activities require multiple truck deliveries, these deliveries will be carefully scheduled so that there is always adequate on-site area for the holding of the trucks until they can be unloaded. Once at the site all vehicles well be brought within the fence line and will make every attempt to avoid queueing on public streets.
3. Delivery Truck Holding Areas Off-Site: In the event that adequate on-site area for holding of trucks is not available, an off-site marshalling area will be utilized for trucking. The designated off-site location will be identified in the construction management plan.

K. Parking During Construction

1. Construction Parking: Adequate parking for construction workers shall be provided on site or arrangements for off-street parking at an off-site location shall be provided. The parking arrangements shall be included in the construction management plan.
2. Parking: Where existing facilities are remaining in operation during construction, the construction management plan shall identify how the parking for employees and others shall be managed.
3. Truck Routes and Volumes: The Construction Management Plan shall address the designated truck routes and expected truck volumes.

L. Dewatering Plans

A basic dewatering plan for any construction work is required. The plan must cover construction sites where groundwater is not expected but the impact of rainwater may require dewatering. The plan must include operating procedures, equipment to be used, including filters, erosion and sediment control measures, or other methods of removing sediment from approved discharges.

For construction work that will require frequent dewatering of groundwater from site, a dewatering plan must be prepared and approved by the Department of Public Works.
Groundwater and/or soil testing may be required to determine course of action if treatment is necessary. Approval for all discharges to City infrastructure is required.

The proposed plan must address the following:

- Project duration, discharge location, storage equipment on-site, dewatering schematic, and emergency contact.
- General requirements include trained staff on-site for all approve discharges and required site log for documentation of all discharges.
- Storage and/or treatment process should include proper settling time and maintain proper use of filtering medium as required.
- Contingency/maintenance plan for all dewatering equipment devices and filtration mediums.

Any water that is removed from an excavation must be pumped from a perforated device buried in crush stone prior discharge and/or prior to storage and treatment. There will be no discharge allowed during precipitation events.

M. Special Measures as Necessary

For construction work that will take place over a long period (e.g. 12 months or more), involve major demolition/ deep excavation/ piling and/or special construction techniques, or are located near sensitive uses (e.g. medical care facilities, schools), the Construction Management Plan should provide details and demonstrate that all appropriate special measures have been taken to avoid, minimize, or possibly compensate for potential impacts. This may include taking baseline measurements before construction, such as arranging to photograph the foundations of nearby properties upon consent of the owners, in order to assess any future impacts of vibration, noise, etc.

Neighborhood Meeting Certification

I, Thomas S. Greer hereby certify that a neighborhood meeting was held on November 6, 2019 at 275 Presumpscot Street (Portland Motor Club), in Portland at 6:00PM concerning 275 Presumpscot Street.

I also certify that on October 21, 2019, invitations were mailed to all addresses on the mailing list provided by the Planning Division, including property owners within 500 feet of the proposed development or within 1000 feet of a proposed industrial subdivision or industrial zone change and the residents on the "interested parties" list.

Signed,

_____ 11/8/19 (date)

Attached to this certification are:

1. Copy of the invitation sent
2. Sign-in sheet
3. Meeting minutes

WALSH
ENGINEERING ASSOCIATES, INC.

Neighborhood Meeting Invitation

October 21, 2019

Dear Neighbor:

Please join us for a neighborhood meeting to discuss our plans for a new 34,000 sq. ft. footprint building at 275 Presumpscot Street. The top floor will be 34,000 square feet accessed from Presumpscot Street. The lower floor, of 17,000 square feet, will be accessed from a private right-of-way on the north. The access in the back will connect to the adjacent building owned by Waldron Realty LLC. The two buildings will complement each other and provide space for vehicle storage. The utilities will be extended from Presumpscot Street to the building. The building will be used for the storage of vehicles. These will include cars, boats, and even RVs. It will operate under the Portland Motor Club banner.

Meeting Location: 275 Presumpscot Street (Portland Motor Club)

Meeting Date: November 6, 2019

Meeting Time: 6:00 pm

The purpose of this meeting is to introduce the project to our neighbors as part of the City approval process.

If you have any questions, please call Thomas S. Greer, P.E., Walsh Engineering Associates, Inc. at 207-553-9898 or email him at tgreer@walsh-eng.com.

Thomas S. Greer, PE
Walsh Engineering Associates, Inc.

NEIGHBORHOOD MEETING SIGN IN SHEET

Meeting Date: November 6, 2019
Meeting Location: 275 Presumpscot Street (Portland Motor Club)
Project Address: 275 Presumpscot Street

Public Attendence

Name	Address	Email
MATT FLAHERTY	322 Presumpscot	CBE @ CascoBayElectric.com
CJ Bergeron	273 Presumpscot	cj@thascallhall.com
Dale Akeley		

NEIGHBORHOOD MEETING SIGN IN SHEET

Meeting Date: November 6, 2019
Meeting Location: 275 Presumpscot Street (Portland Motor Club)
Project Address: 275 Presumpscot Street

Developer & Consultant Team Attendence

Name	Address	Email
Thomas S. Greer	Walsh Engineering Associates, Inc. One Karen Drive, Suite 2A Westbrook, ME 04092	tgreer@walsh-eng.com
Dale Akeley	Projects Resources, Inc. 164 Princes Point Rd Yarmouth, ME 04096	eprojec1@maine.rr.com

WALSH
ENGINEERING ASSOCIATES, INC.

275 Presumpscot Street
November 6, 2019

SUMMARY OF PUBLIC INFORMATIONAL MEETING

The meeting was held at 275 Presumpscot Street, the Portland Motor Club building. It was started at 6:00 pm with two neighbors in attendance. Tom Greer reviewed the site plan and features that will be included in the construction.

It was noted that the project is tentatively scheduled for a workshop on November 26, 2019 and an approval on December 10, 2019.

There were a few questions about the project. Most of the discussion was on the side street and its use. Both people were in favor of the project.

The existing sign at the top of the street will remain in place.

The meeting was concluded at 6:10pm.

Respectfully Submitted

Thomas S. Greer P.E.
Walsh Engineering Associates, Inc.

WALSH
ENGINEERING ASSOCIATES, INC.

File: 537

November 4, 2019

Mr. Andrew Tufts
City of Portland, Planning Division
389 Congress Street, 4th Floor
Portland, ME 04101

RE: 275 Presumpscot Street Storage Building, Project ID PL-000832-2019

Dear Andrew,

Below are our responses to the review comments:

Mike Tremblay, DPW P.E. Senior Engineer

- Both access driveways are wider than allowed per the City of Portland's Technical Manual, which defines the maximum allowable width of 24 feet, measured at the property line. The proposed driveways are 38.00 feet and 32.5 feet, respectively, measured at the narrowest point, which is several feet behind the property line. The driveway widths at the property line are significantly larger (about 46.5 feet and 41 feet, respectively). These driveway widths should be minimized as much as possible. DPW acknowledges that the design vehicle serving the site may be as large as a vehicle transporter, so it is likely that a waiver will be supported by DPW if the driveway is minimized as much as possible. Turning templates were provided; however, these templates do not support the proposed driveway widths, as vehicles enter and exit the site with excess space to spare. Excess driveway width makes it easier for smaller vehicles to make maneuvers at unsafe speeds into and out of the driveway, and increases exposure of crossing pedestrians.
  We have reduced the driveway width to 30' at the boundary, meeting the industrial road standards.

- Similar to the above, the proposed 25-foot radii at each site driveway are likely not necessary, particularly the northbound edge of each driveway. Curb radii should be specified based on the needs of the design vehicle, and kept to a minimum.
  We have maintained the 25' radii as trucks will use them depending on the direction of travel. This minimizes the breach of travel lane when exiting.

- It is not clear if one or both driveways will be used for primary access to the site for larger vehicle. It is assumed that both driveways will be full-access, and neither driveway will be specified as the primary driveway, and that all vehicles will be expected to enter and exit from either driveway. The Applicant should clarify if this is not the case.
  We expect trucks to enter and exit from both driveways.

- The site drains via a gravel wetland, with an emergency overflow leading to a culvert toward existing railroad tracks. Additionally, the site's foundation drain directs runoff directly to this. This may represent a potential issue. We are investigating and will follow up.

This is the current drainage pattern for the site. No off site change is expected.

- The applicant is providing much more parking (19 total spaces) than required (3 total spaces). If an application proposes 10% more parking than required, justification is needed before approval. The Applicant shall provide calculations and reasoning for providing the 16 excess parking spaces proposed. This represents approximately 4,800 SF of impervious area that may be otherwise landscaped or used for another function.
  The parking number is in error. The 3 spaces are for office use. The warehouse use at 1 space per 1,000 sq. ft. was omitted. We request a waiver down to the 19 spaces.

Bruce Hyman – Transportation

Site Plan:

- The location of the stop bar and stop sign are to be relocated to the applicant's property in advance of the sidewalk

  The stop bar has been relocated.

- The specific location of the 2 bike racks is not show adequately - the bike racks are to be placed within a firm and stable surface area of sufficient size

  The bike racks are on the paved surface.

- Site Detail C2.2, 7 Bituminous Sidewalk - the detail is to have a note added that the maximum cross-slope of the sidewalk is 2%.
  The note has been added.

General:

- Plan view and cross-section driveway details are to be provided that depict adequate construction details including the provision of an ADA-compliant pedestrian access route with a minimum 5' width and maximum cross-slope of 2%, preferably at the same elevation as the remainder of the sidewalk - the driveway configurations/designs are to be changed per Mike Tremblay's prior comments
  The grading plan shows the 2% grading route from the ADA space to the building.

Lauren Swett - Civil

In accordance with the Maine DEP Chapter 500 Regulations and Section 5 of the City's Technical Manual, the Applicant is required to meet the Basic, General, and Flooding Standards for Stormwater Management. An erosion and sedimentation control plan and details have been provided to meet the Basic Standards. The Applicant is providing a gravel wetland to meet the General and Flooding Standards. I have the following comments on the stormwater design.

- The gravel wetland invert elevations utilized in the HyrdoCAD model do not match the design elevations shown on the plans. Please clarify and adjust the calculations as required.

  The 2" orifice is 29.83. The storage stops at 31.0. No volume was used for the soil. 31.0 was used as the 2" outlet to accurately model the flow.

- Please verify the sizing of the proposed concrete box culverts. They have not been modeled as part of the HydroCAD model, but it is suggested that at least a Manning's calculation be completed to confirm sizing and flow velocities. Rip rap outlet protection will likely be required.

  The box culverts are added to the hydrocad model.

- Please clarify the outlet invert of the proposed north culvert – the outlet invert elevation is different on the grading plan and on the detail.

  The details were incorrect.

The Applicant should consider the impact of some of their snow storage areas on internal site drainage. In particular, we suggest that the southwest corner of the parking lot, near the Presumpscot Street entrance should not be used as snow storage as this would block stormwater runoff from the parking lot into the gravel wetland.

The snow storage areas have been revised.

Let me know if you have any questions.

Respectfully,

Thomas S. Greer, PE
Walsh Engineering Associates, Inc.

cc: Bill Waldron-email, Dale Akeley-email, David Matero-email, File

Enc.

Portland Motor Club

293 Presumpscot Street
Portland, Maine

Prepared For:

Waldron Realty, LLC
178 U.S. Route One
Falmouth, Maine

Level III Site Plan Approval Resubmittal - November 4, 2019

Design Consultants:

PROJECT MANAGER
PROJECT RESOURCES INC.
164 PRINCES POINT ROAD
YARMOUTH, MAINE 04096
207-846-8875

BUILDING ARCHITECT
DAVID MATERO ARCHITECTURE
100 FRONT STREET, SUITE 40
BATH, MAINE 04530
207-389-4278

CIVIL ENGINEER
WALSH ENGINEERING ASSOCIATES, INC.
ONE KAREN DRIVE, SUITE 2A
WESTBROOK, MAINE 04092
207-553-9898

LAND SURVEYOR
TITCOMB ASSOCIATES
133 GRAY ROAD
FALMOUTH, MAINE 04105
207-797-9199

WALSH
ENGINEERING ASSOCIATES, INC.

One Karen Dr., Suite 2A | Westbrook, Maine 04092
ph: 207.553.9898 | www.walsh-eng.com



N

GRAPHIC SCALE
1,000 0 500 1,000
1 inch = 1,000ft.

List of Drawing

SHEET NO.	SHEET TITLE
	COVER SHEET
	EXISTING CONDITIONS SURVEY
C1.1	SITE PLAN
C1.2	EXISTING CONDITIONS AND REMOVALS PLAN
C1.3	GRADING AND UTILITIES PLAN
C1.4	EROSION CONTROL PLAN & LANDSCAPE PLAN
C2.1	SITE DETAILS
C2.2	SITE DETAILS
C2.3	SITE DETAILS
C2.4	SITE DETAILS
D1.1	DRAINAGE ANALYSIS PLANS
A1.1	FIRST FLOOR PLAN
A1.2	SECOND FLOOR PLAN
A1.3	BASEMENT PLAN
A1.4	ROOF PLAN
A1.5	SITE LIGHTING PLAN
A2.1	EAST & NORTH BUILDING ELEVATIONS
A2.2	WEST & SOUTH BUILDING ELEVATIONS
R.1	CODE ANALYSIS
R.2	CODE REVIEW PLANS

Record Owner:

WALDRON REALTY, LLC
178 U.S. ROUTE ONE
FALMOUTH, MAINE 04105

Parcel ID:

MAP 421, LOT A-6
MAP 421, LOT A-1
PORTION OF MAP 421, LOT X-002

Permits:

TYPE	JURISDICTION	STATUS
SITE PLAN PERMIT	CITY OF PORTLAND	SUBMITTED

GENERAL NOTES:

1. THE CONTRACTOR SHALL BE RESPONSIBLE FOR NOTIFYING "DIG SAFE" AND LOCAL UTILITY COMPANIES AT LEAST THREE (3) BUSINESS DAYS, BUT NOT MORE THAN 30 CALENDAR DAYS, PRIOR TO THE COMMENCEMENT OF ANY EXCAVATION, IN ACCORDANCE WITH MAINE STATE LAW. "DIG SAFE" TELEPHONE NUMBER IS 1-888-344-7233.
2. THE CONTRACTOR SHALL BE SOLELY RESPONSIBLE FOR ALL AND ANY MEANS, METHODS, AND TECHNIQUES EMPLOYED TO PERFORM THE WORK SHOWN ON THE PLANS.
3. ALL WORK SHALL COMPLY WITH ALL LOCAL, STATE, AND FEDERAL REGULATIONS INCLUDING ALL SAFETY REGULATIONS (OSHA).
4. ALL WORK SHALL BE IN CONFORMANCE ALL UTILITY COMPANIES STANDARDS.
5. THE CONTRACTOR SHALL SECURE ALL NECESSARY PERMITS FOR THE WORK SHOWN ON THESE PLANS PRIOR TO CONSTRUCTION.
6. ALL PAVEMENT/CONCRETE CUTS SHALL BE SAW CUT TO RESULT IN CLEAN EDGES. A TACK COAT SHALL BE APPLIED ALONG THE PAVEMENT CUT EDGES AND THE NEW PAVEMENT BUTTED TO IT, UNLESS OTHERWISE DIRECTED BY THE OWNER OR OWNER'S REPRESENTATIVE.
7. ALL WORK SHALL COMPLY WITH THE CITY OF PORTLAND STREET OPENING PERMIT REQUIREMENTS.
8. ALL EROSION CONTROL MEASURES SHALL BE INSTALLED PRIOR TO ANY SITE EXCAVATION OR REGRADING. REFER TO THE WRITTEN EROSION CONTROL PLAN AND DRAWINGS FOR FURTHER EROSION CONTROL GUIDELINES.
9. CONTRACTOR SHALL VERIFY ALL EXISTING CONDITIONS SHOWN ON THE DRAWINGS. IF ANY DISCREPANCIES ARE FOUND, THE OWNER OR OWNER'S REPRESENTATIVE SHALL BE NOTIFIED IMMEDIATELY.

ZONING INFORMATION*:

CLASSIFICATION: IM - INDUSTRIAL ZONE

PERMITTED USES: WAREHOUSING, INCLUDING OUTDOOR STORAGE
REPAIR SERVICES, INCLUDING ALL TYPES OF AUTOMOTIVE

MINIMUM LOT SIZE: NONE
PROVIDED: TOTAL PARCEL: 195,271 S.F.
PARCEL 1 & 3: 117,852 S.F.
PARCEL 2 & 4: 77,420 S.F.

MAX. IMPERVIOUS SURFACE RATIO: 75%
PROVIDED: TOTAL PARCEL: 32%
PARCEL 1 & 3: 25%
PARCEL 2 & 4: 44%

MAXIMUM BUILDING HEIGHT: 75 FEET
PROVIDED: TOTAL PARCEL: 46.4 FEET
PARCEL 1 & 3: 23.4 FEET
PARCEL 2 & 4: 46.4 FEET

MINIMUM SIDE YARDS: 1 FOOT FROM SIDE LINE FOR EACH FOOT OF BUILDING HEIGHT UP TO 25':
PROVIDED: TOTAL PARCEL: SOUTH = 154.6', NORTH = 25.2'
PARCEL 1 & 3: SOUTH = 154.6', NORTH = 25.0'
PARCEL 2 & 4: SOUTH = 25.0', NORTH = 25.2'

MINIMUM REAR YARDS: 1 FOOT FROM REAR LINE FOR EACH FOOT OF BUILDING HEIGHT UP TO 25':
PROVIDED: TOTAL PARCEL: 67.5 FEET
PARCEL 1 & 3: 68.7 FEET
PARCEL 2 & 4: 67.5 FEET

MINIMUM FRONT YARD: 1 FOOT FROM FRONT LINE FOR EACH FOOT OF BUILDING HEIGHT UP TO 25':
PROVIDED: TOTAL PARCEL: 51.8 FEET
PARCEL 1 & 3: 51.8 FEET
PARCEL 2 & 4: 65.0 FEET

MINIMUM STREET FRONTAGE: 60 FEET
PROVIDED: TOTAL PARCEL: 615.4 FEET
PARCEL 1 & 3: 350.0 FEET
PARCEL 2 & 4: 265.4 FEET

PAVEMENT SETBACK FROM LOT LINES: 10 FEET
PROVIDED: TOTAL PARCEL: FRT = 1.9', REAR = 1.8'
PARCEL 1 & 3: FRT = 1.9', REAR = 1.8'
PARCEL 2 & 4: FRT = 19.7', REAR = 25.0'

*ZONING STANDARDS FROM PORTLAND CITY CODE CHAPTER 14, LAND USE, DIVISION 14

LEGEND

EXISTING		PROPOSED
TBM	TEMPORARY BENCHMARK	
	PROPERTY LINE	
	INTERIOR PARCEL LINE	
	RIGHT-OF-WAY LINE	
	ABUTTING PROPERTY LINE	
	EASEMENT LINE	
	BUILDING SETBACK	
	IRON PIN FOUND	
	MONUMENT FOUND	
	RAILROAD SPIKE SET	
	PROPERTY CORNER TO BE SET	TO BE SET
N/F "OWNERS NAME" DEED BOOK / PAGE TAX MAP-BLOCK-LOT	ABUTTER	
	STORM DRAIN CATCH BASIN	
	SANITARY SEWER MANHOLE	
	HYDRANT	
	HOSE BIB	
G	GAS METER	
E	ELECTRIC MANHOLE	
E	ELECTRIC METER	
	WALL MOUNTED CAMERA	
	WALL MOUNTED AREA LIGHT	
AC	AIR-COND UNIT	
	UTILITY POLE	
	UTILITY POLE WITH GUY	
	BOLLARD	
	BICYCLE RACK	
	BUILDING	
	ACCESS / EGRESS DOORS	
	WIRE FENCE	
	CHAINLINK FENCE	
	GUARD RAIL	
	RAILROAD TRACKS	
	RETAINING WALL	
	EDGE OF PAVEMENT	
	GRANITE CURB	
	HANDICAP PARKING	
	PARKING STRIPING	
	TRAFFIC/PARKING SIGN	
	TREE OR SHRUB	
	SNOW STORAGE AREAS	

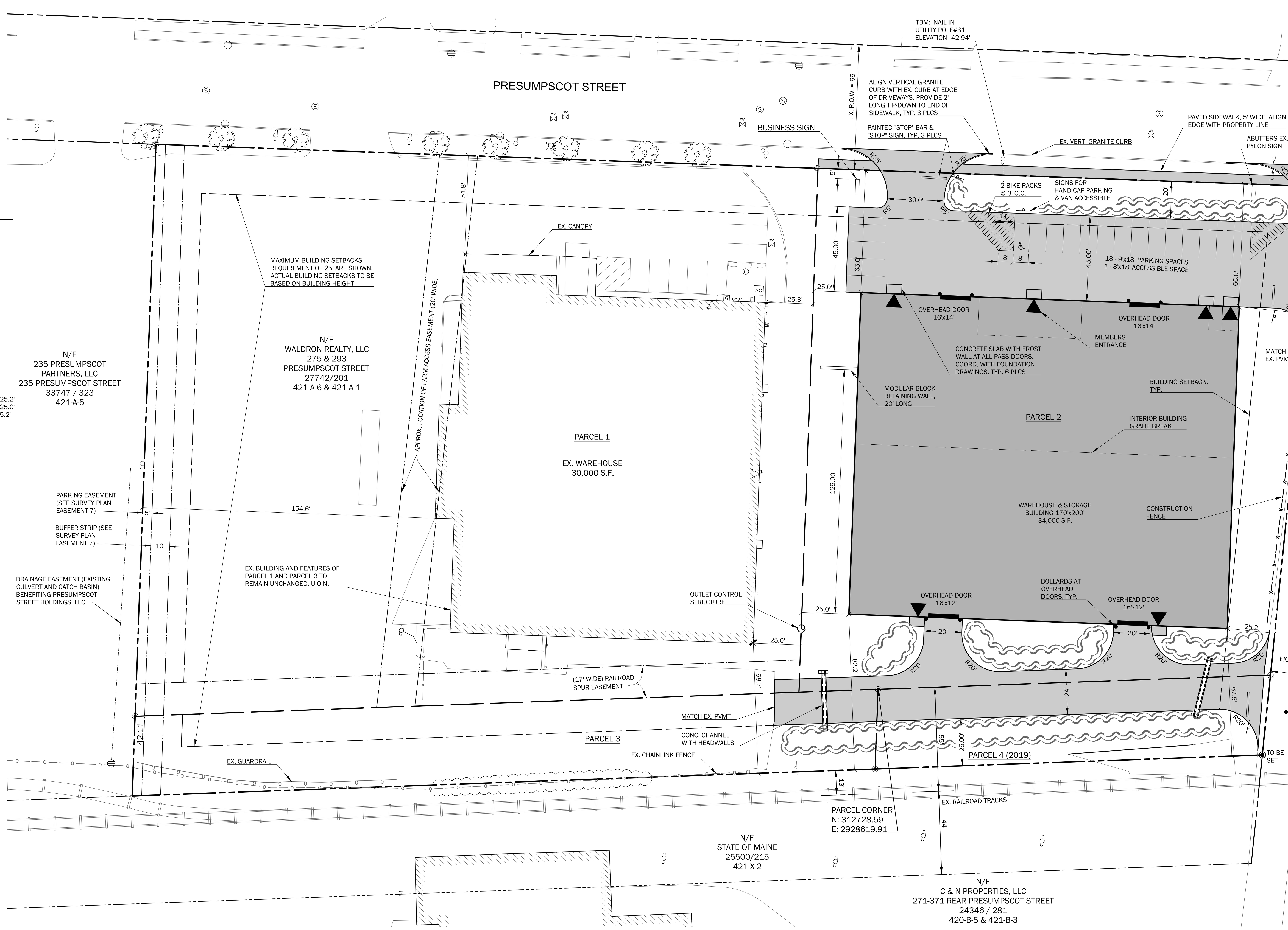

PARCEL INFORMATION:

1. OWNER OF RECORD: WALDRON REALTY, LLC, CCRD BOOK 27742, PAGE 201
178 US ROUTE ONE, FALMOUTH MAINE 04105
2. STREET ADDRESSES: 275 & 293 PRESUMPSCOT STREET, PORTLAND, MAINE
3. TAX MAP & LOTS: PARCEL 1: MAP 421, LOT A-6.
PARCELS 2 & 3: MAP 421, LOT A-1
PARCEL 4: PORTION OF MAP 421, LOT X-002
4. TOTAL AREA OF PARCELS: PARCEL 1 - 101,356 S.F (2.33 ACRES)
PARCEL 2 - 68,764 S.F. (1.58 ACRES)
PARCEL 3 - 16,496 S.F. (0.38 ACRES)
PARCEL 4 - 8,656 S.F. (0.19 ACRES)
TOTAL: 195,272 S.F. (4.48 ACRES)
5. CURRENT ZONE: INDUSTRIAL ZONE (I-M)
6. TEMPORARY BENCHMARK: NAIL IN UTILITY POLE#31, ELEVATION=42.94'

BEARINGS ARE REFERENCED TO GRID NORTH MAINE STATE PLANE COORDINATE SYSTEM NAD83 BASED ON INFORMATION PROVIDED BY THE CITY OF PORTLAND PUBLIC WORKS DEPARTMENT, ENGINEERING DIVISION.

ELEVATIONS ARE BASED ON THE CITY OF PORTLAND VERTICAL DATUM PER BENCHMARK INFORMATION PROVIDED BY THE CITY OF PORTLAND PUBLIC WORKS DEPARTMENT, ENGINEERING DIVISION.

PARKING INFORMATION:

VEHICLE SPACES
REQUIRED: 54 SPACES
OFFICES: 1 SPACE PER 400 S.F. OF SPACE NOT USED FOR BULK STORAGE

ENTRANCE AREA = 1,200 S.F. = 3 SPACES REQUIRED

INDUSTRIAL (NOT CATERING TO RETAIL) OVER 3,000 S.F.:
1 SPACE PER 1,000 S.F OF FLOOR SPACE

INDUSTRIAL STORAGE AREA = 50,800 S.F. = 51 SPACES REQUIRED

PROVIDED: 19 SPACES
STANDARD SPACES, 9'x18' = 18

VAN ACCESSIBLE HANDICAP SPACE,
8'x18' WITH 8'x18" ACCESS AISLE = 1

BICYCLE SPACES
REQUIRED:
2 BICYCLE SPACES PER 10 VEHICLE SPACES PROVIDED = 3 SPACES REQUIRED

PROVIDED:
BICYCLE RACKS, 2 RACKS OF 2 SPACES EACH = 4 SPACES

SOLID WASTE:

ALL SOLID WASTE IS TO BE STORED INDOORS AND DISPOSED OF BY A PRIVATE HAULER. AN OUTDOOR DUMPSTER IS NOT INCLUDED IN THIS PROJECT.

SNOW STORAGE AND REMOVAL:

1. SNOW IS TO BE STORED WITHIN THE SNOW STORAGE AREAS.
2. SNOW MAY BE PHYSICALLY REMOVED AND TRANSPORTED OFFSITE IF NECESSARY
3. SNOW TRANSPORTED OFFSITE SHALL BE BROUGHT TO A MAINE DEP APPROVED "SNOW DUMP" OR MEET THE EXEMPTION REQUIREMENTS SPECIFIED WITHIN CHAPTER 573 WHEN THE ABOVE REQUIREMENTS CANNOT BE MET DUE TO AN ABUNDANCE OF SNOW.
4. THE SNOW CONTRACTOR SHALL BE RESPONSIBLE FOR ANY DAMAGE TO VEGETATION, LANDSCAPING, CURBING, LIGHTING, FENCING ETC. RESULTING FROM THEIR ACTIVITIES.
5. THE SNOW CONTRACTOR SHALL USE SALT OR CHLORIDE SUBSTITUTE TO DEICE THE PARKING LOT.

DEVELOPED AREA CALCULATIONS:

IMPERVIOUS AREAS:

SURFACE	EXISTING	PROPOSED
BUILDINGS	140 S.F.	34,000 S.F
PAVEMENT	8,955 S.F.	25,980 S.F.
GRAVEL	47,825 S.F.	
RAILROAD BALLAST	2,159 S.F.	
TOTAL:	59,079 S.F.	59,980 S.F.

FLOOD ZONE INFORMATION:

1. CLASSIFICATION: ZONE X
2. FLOOD INSURANCE RATE MAP COMMUNITY PANEL NUMBER 230051 0007 C
3. EFFECTIVE DATE: MAP REVISED DECEMBER 8, 1998

WAIVERS:

1. THE PLANNING BOARD VOTED TO / NOT TO WAIVE CHAPTER 14, LAND USE CODE, DIVISION 20, OFF STREET PARKING, SECTION 14-332 (I): "FOR THAT PART OF EVERY BUSINESS, MANUFACTURING, AND INDUSTRIAL BUILDING NOT CATERING TO RETAIL TRADE AND WITH FLOOR AREA OVER THREE THOUSAND (3,000) SQUARE FEET: ONE (1) PARKING SPACE FOR EACH ONE THOUSAND (1,000) SQUARE FEET OF FLOOR AREA, OR MAJOR FRACTION THEREOF" TO ALLOW 19 TOTAL ON-SITE PARKING SPACES.

GRAPHIC SCALE
30 0 15 30 60 120
1 inch = 30 ft.

WALSH
ENGINEERING ASSOCIATES, INC.
One Karen Dr., Suite 2A | Westbrook, Maine 04092
ph: 207.553.9898 | www.walsh-eng.com

Copyright © 2018

STATE OF MAINE
THOMAS S. GREER
No. 4206
LICENSED PROFESSIONAL ENGINEER
11/4/19

PORTLAND MOTOR CLUB
293 PRESUMPSCOT STREET
PORTLAND, MAINE

WALDRON REALTY, LLC
178 U.S. ROUTE ONE
FALMOUTH, MAINE

Rev.	Date	Description	Drawn	Check
1	11/4/2019	CITY REVIEW COMMENTS	JDC	TSG

Sheet Title:
SITE PLAN

Job No.: 537
Date: AUG. 29, 2019
Scale: AS SHOWN
Drawn: JDC
Checked: TSG
Sheet No.: C1.1

P:\537 - 293 Presumpscot Street\3. CAD\537 - BASE 293.dwg plot date: 11/4/2019 1:43 PM

LEGEND

EXISTING

- TBM — TEMPORARY BENCHMARK
- PROPERTY LINE
- INTERIOR PARCEL LINE
- RIGHT-OF-WAY LINE
- ABUTTING PROPERTY LINE
- EASEMENT LINE
- BUILDING SETBACK
- IRON PIN FOUND
- MONUMENT FOUND
- RAILROAD SPIKE SET
- N/F "OWNERS NAME" DEED BOOK / PAGE TAX MAP-BLOCK-LOT — ABUTTER
- STORM DRAIN CATCH BASIN
- STORM DRAIN CULVERT
- SANITARY SEWER MANHOLE
- SANITARY SEWER LINE
- WATERLINE
- HYDRANT
- HOSE BIB
- WATER LINE GATE VALVE
- GAS METER
- OVERHEAD ELECTRIC LINE
- ELECTRIC MANHOLE
- ELECTRIC METER
- WALL MOUNTED CAMERA
- WALL MOUNTED AREA LIGHT
- AIR-COND UNIT
- UTILITY POLE
- UTILITY POLE WITH GUY
- BUILDING
- ACCESS / EGRESS DOORS
- WIRE FENCE
- CHAINLINK FENCE
- GUARD RAIL
- RAILROAD TRACKS
- LANDSCAPE/RETAINING WALL
- DEMO EDGE OF PAVEMENT
- DEMO CURB LINE
- EDGE OF PAVEMENT
- GRANITE CURB
- PARKING STRIPING
- TRAFFIC/PARKING SIGN
- 32 — INTERMEDIATE CONTOUR
- 30 — INDEX CONTOUR
- TREE OR SHRUB
- GRAVEL DRAINAGE STRIP

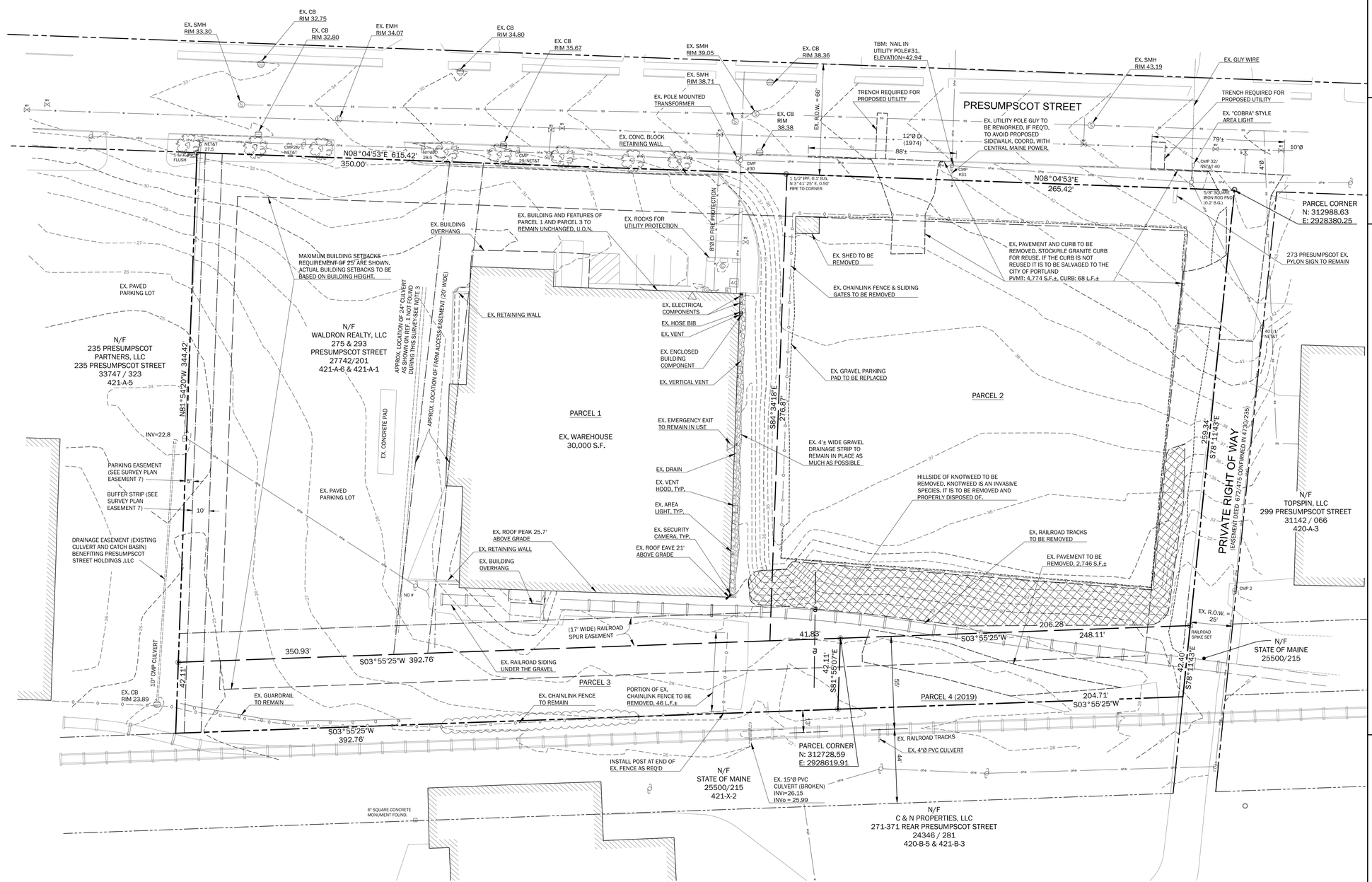

WALSH ENGINEERING ASSOCIATES, INC.
One Karen Dr., Suite 2A | Westbrook, Maine 04092
ph: 207.553.9898 | www.walsh-eng.com

Copyright © 2018

STATE OF MAINE
THOMAS S. GREER
No. 4206
REGISTERED LICENSED PROFESSIONAL ENGINEER
11/4/19

PORTLAND MOTOR CLUB
293 PRESUMPSCOT STREET
PORTLAND, MAINE

WALDRON REALTY, LLC
178 U.S. ROUTE ONE
FALMOUTH, MAINE

Rev.	Date	Description	Drawn	Check
1	11/4/2019	CITY REVIEW COMMENTS	JDC	TSG

Sheet Title:

EXISTING CONDITIONS & REMOVAL PLAN

Job No.:	537
Date:	AUG. 29, 2019
Scale:	AS SHOWN
Drawn:	JDC
Checked:	TSG

Sheet No.: C1.2

P:\537 - 293 Presumpscot Street\ CADD\ 537 - BASE 29-Aug.dgn date: 11/4/2019 1:43 PM

GRADING, DRAINAGE AND UTILITIES NOTES:

1. REFER TO SHEET C1.2 FOR BOUNDARY AND TOPOGRAPHIC INFORMATION.
2. PRIOR TO ANY CONSTRUCTION ACTIVITIES, CONTRACTOR SHALL VERIFY ALL AFFECTED GRADES. ANY DISCREPANCIES SHALL BE REPORTED IMMEDIATELY TO THE OWNER OR OWNER'S REPRESENTATIVE.
3. ALL AREAS NOT REQUIRING GRADING SHALL BE LEFT UNDISTURBED. CONTRACTOR SHALL NOT DISTURB THESE AREAS AND PRESERVE EXISTING VEGETATION.
4. GRADE ALL NEW WORK FOR POSITIVE DRAINAGE AND NO PUDDLING. MATCH EXISTING GRADES SMOOTHLY AND CONTINUOUSLY.
5. DRAINAGE AT TERMINUS OF CURBING SHALL BE RIP-RAPPED UNLESS OTHERWISE SPECIFIED OR NOTED ON THE PLANS, OR AS DIRECTED BY THE OWNER OR OWNER'S REPRESENTATIVE.
6. OWNER AND PROJECT ENGINEER WILL BE CLOSELY MONITORING FINISH GRADING IN THE FIELD. CONTRACTOR SHALL PERFORM FINISH WORK AS DIRECTED BY THE OWNER OR PROJECT ENGINEER TO ACHIEVE THE FINISH GRADE CONDITIONS SHOWN ON THE PLANS.
7. ALL SITE IMPROVEMENTS INCLUDING UTILITIES MUST CONFORM TO THE CITY OF PORTLAND'S TECHNICAL GUIDELINES AND STANDARDS.

LAYOUT, MATERIALS, AND UTILITY NOTES:

1. ALL DIMENSIONS, LOCATIONS AND CONTROLS SHALL BE VERIFIED IN THE FIELD BY THE CONTRACTOR PRIOR TO ANY CONSTRUCTION ACTIVITIES. ANY DISCREPANCIES SHALL BE REPORTED IMMEDIATELY TO THE OWNER OR OWNER'S REPRESENTATIVE.
2. DO NOT SCALE THE DRAWINGS FOR REQUIRED DIMENSIONS. ANY DISCREPANCIES IN DIMENSIONING SHALL BE REPORTED IMMEDIATELY TO THE OWNER'S REPRESENTATIVE.
3. ALL ANGLES ARE 90 DEGREES UNLESS OTHERWISE SHOWN.
4. ALL EDGES OF PAVING SHALL BE STAKED OUT BY THE CONTRACTOR AND REVIEWED BY THE OWNER'S REPRESENTATIVE PRIOR TO CONSTRUCTION.
5. PROVIDE A SMOOTH TRANSITION WHERE NEW WORK MEETS EXISTING.
6. ALL DISTURBED AREAS NOT OTHERWISE TREATED SHALL BE LOAMED AND SEEDED.
7. CENTERLINES OF DRIVEWAY AND WALKWAY, PROPOSED PARKING LOTS AND PROPOSED UTILITY LINES SHALL BE LOCATED AND LAID OUT BY PROFESSIONALLY LICENSED SURVEYOR.
8. SEE LANDSCAPING PLAN FOR NON-PAVED AREA SURFACE TREATMENTS AND CONCRETE PAVER PATTERN LAYOUTS.

LEGEND

EXISTING		PROPOSED
	PROPERTY LINE	
	INTERIOR PARCEL LINE	
	RIGHT-OF-WAY LINE	
	ABUTTING PROPERTY LINE	
	EASEMENT LINE	
	BUILDING SETBACK	
	STORM DRAIN CATCH BASIN	
	STORM DRAIN LINE	SD
	STORM DRAIN CULVERT	
	STORM DRAIN CULVERT WITH HEADWALL	
S	SANITARY SEWER MANHOLE	
ss	SANITARY SEWER LINE	SS
w	WATERLINE	W
	HYDRANT	
	HOSE BIB	
WV	WATER LINE GATE VALVE	
G	GAS METER	
ohe	OVERHEAD ELECTRIC LINE	
	UNDERGROUND ELECTRIC LINE	UGE
E	ELECTRIC MANHOLE	
E	ELECTRIC METER	M
	WALL MOUNTED CAMERA	
	WALL MOUNTED AREA LIGHT	
	UNDERDRAIN	UD
	UNDERDRAIN RISER	UD
	CONTROL STRUCTURE	
	CLEAN OUT	C.O.
	ROOFDRAIN	RD
AC	AIR-COND UNIT	
	UTILITY POLE	
	UTILITY POLE WITH GUY	
	BOLLARD	
	BICYCLE RACK	
	BUILDING	
	ACCESS / EGRESS DOORS	
x	WIRE FENCE	
o	CHAINLINK FENCE	
	GUARD RAIL	
	RIPRAP	
	STONE DRIPSTRIP	
	RAILROAD TRACKS	
	LANDSCAPE/RETAINING WALL	
	EDGE OF PAVEMENT	
	EDGE OF GRAVEL	
	GRANITE CURB	
	TRAFFIC/PARKING SIGN	
32	INTERMEDIATE CONTOUR	34
30	INDEX CONTOUR	30
	SPOT GRADE	43.00
	TREE OR SHRUB	

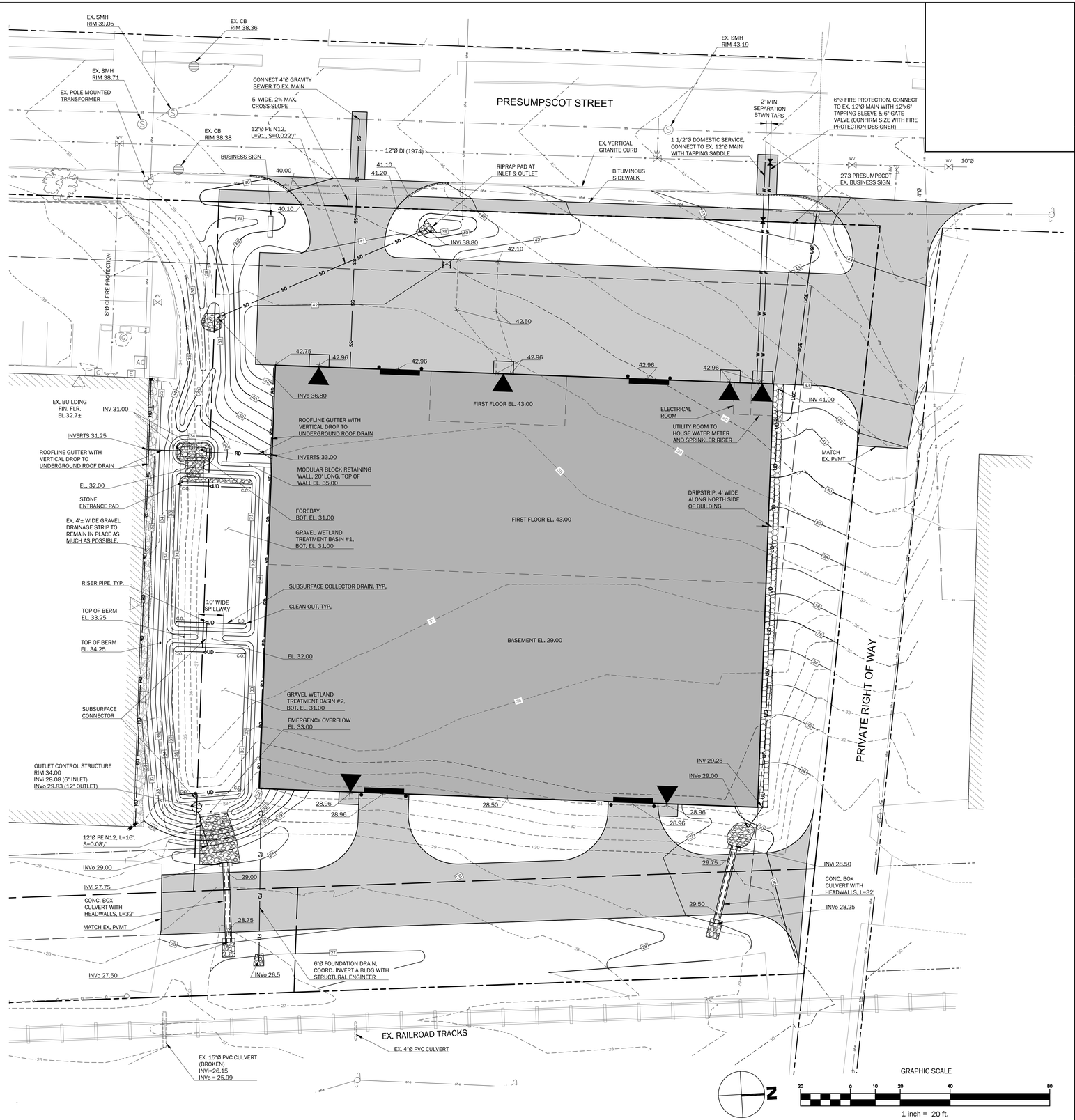

WALSH ENGINEERING ASSOCIATES, INC.
One Karen Dr., Suite 2A | Westbrook, Maine 04092
ph: 207.553.9898 | www.walsh-eng.com

Copyright © 2018

STATE OF MAINE
THOMAS S. GREER No. 4206
LICENSED PROFESSIONAL ENGINEER
11/4/19

PORTLAND MOTOR CLUB
293 PRESUMPSCOT STREET
PORTLAND, MAINE

WALDRON REALTY, LLC
178 U.S. ROUTE ONE
FALMOUTH, MAINE

Rev.	Date	Description	Drawn	Check
1	9/5/19	REVD PER PWD REVIEW	JDC	TSG
2	11/4/2019	CITY REVIEW COMMENTS	JDC	TSG

Sheet Title:
GRADING & UTILITIES PLAN

Job No.:	537
Date:	AUG. 29, 2019
Scale:	AS SHOWN
Drawn:	JDC
Checked:	TSG

Sheet No.: C1.3

H:\537 - 293 Presumpscot Street\C-CAD\537 - BASE SITE.dwg xref date: 11/4/2019 1:44 PM

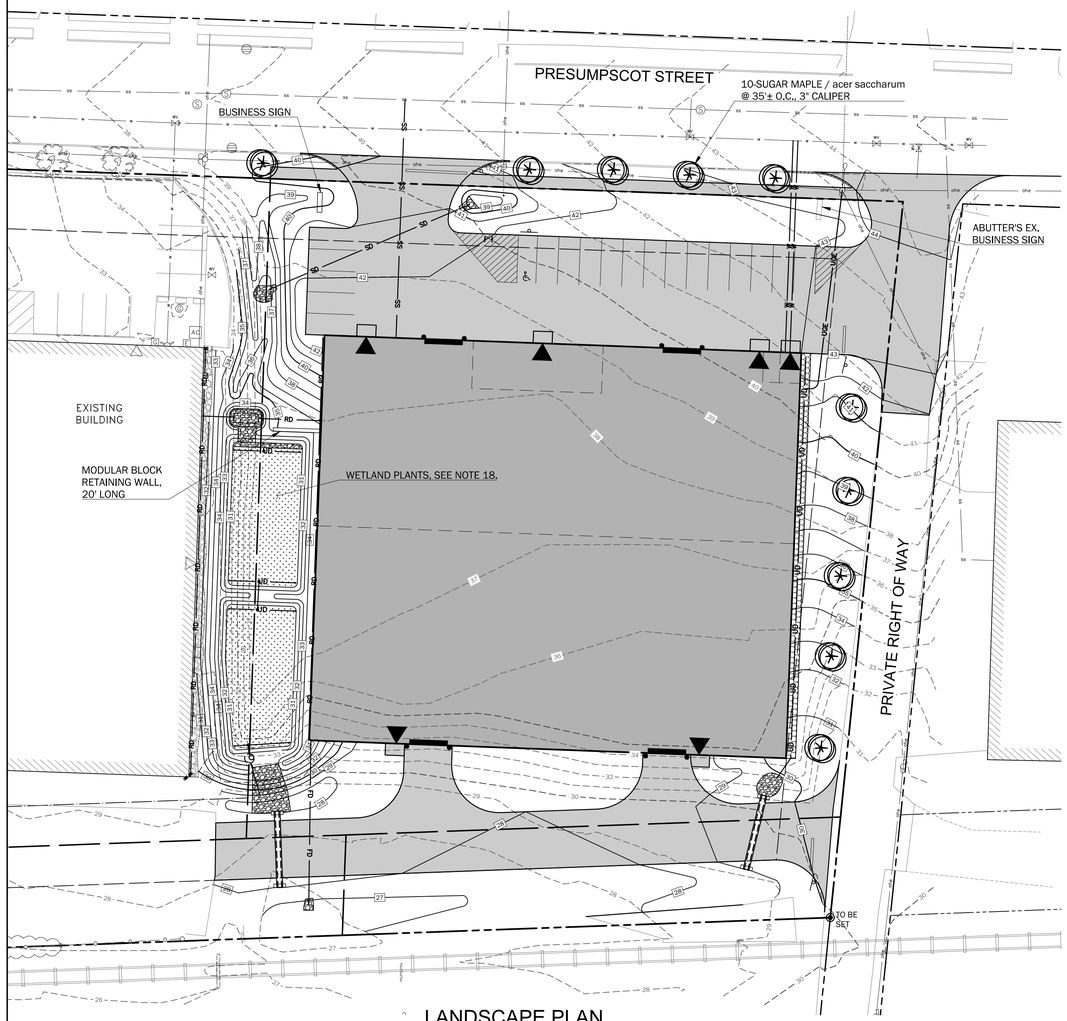

LANDSCAPE PLAN

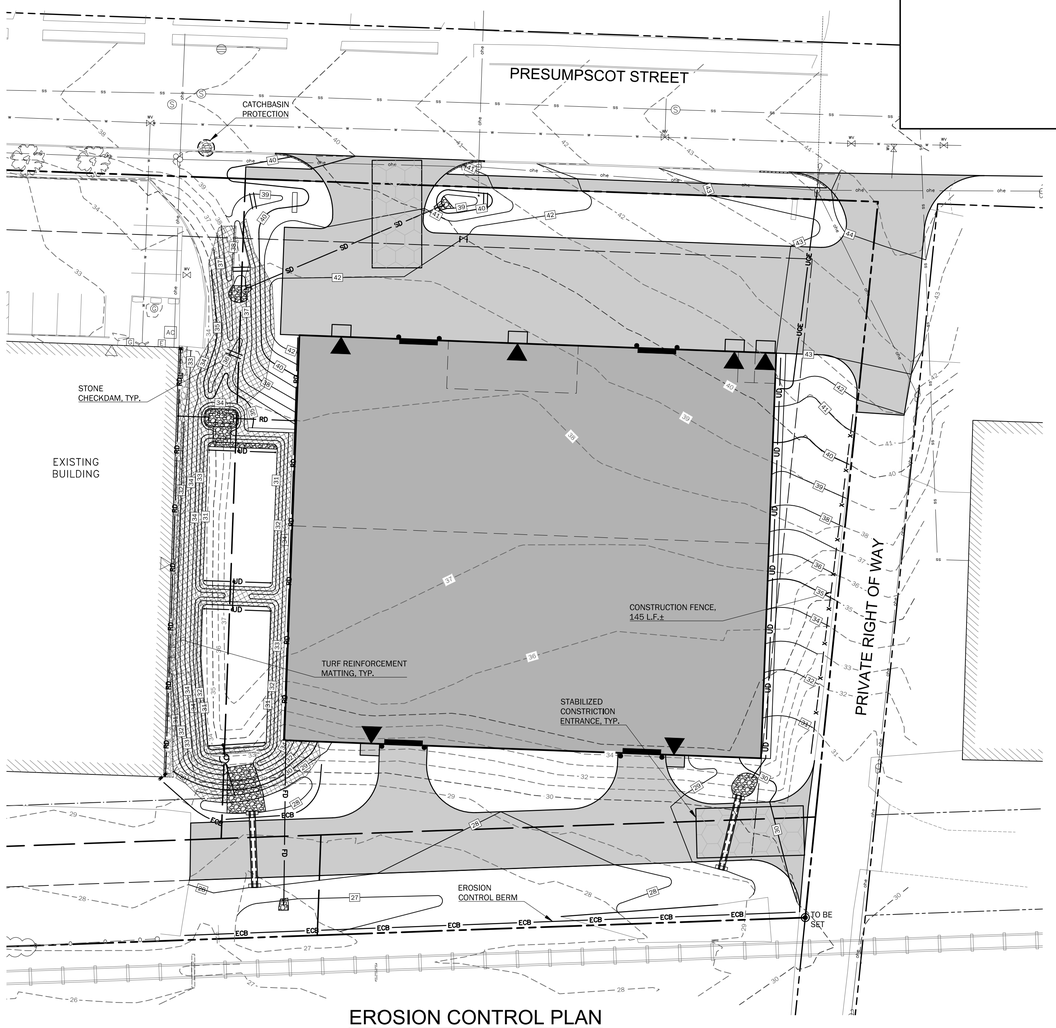

EROSION CONTROL PLAN

LANDSCAPE NOTES:

1. PRIOR TO THE START OF ANY EXCAVATION FOR THE PROJECT BOTH ON AND OFF THE SITE, THE CONTRACTOR SHALL NOTIFY DIGSAFE AND BE PROVIDED WITH A DIGSAFE NUMBER INDICATING THAT ALL EXISTING UTILITIES HAVE BEEN LOCATED AND MARKED.
2. LANDSCAPE CONTRACTOR IS ENCOURAGED TO PROVIDE THE PROJECT MANAGER WITH CONCERNS AND/OR SUGGESTIONS WITH REGARDS TO PROPOSED PLANT MATERIAL SELECTION PRIOR TO PLACING A PURCHASE ORDER.
3. THE LANDSCAPE CONTRACTOR SHALL SUPPLY ALL PLANT MATERIALS IN QUANTITIES SUFFICIENT TO COMPLETE ALL PLANTINGS SHOWN GRAPHICALLY ON THIS DRAWING. CLARIFY ANY DISCREPANCIES WITH THE PROJECT MANAGER PRIOR TO PRICING ANY PLANT MATERIAL.
4. ALL PLANT MATERIALS SHALL CONFORM TO THE GUIDELINES ESTABLISHED BY THE LATEST EDITION OF THE AMERICAN ASSOCIATION OF NURSERYMEN'S "AMERICAN STANDARD OF NURSERY STOCK".
5. ALL PLANT MATERIALS ARE SUBJECT TO THE APPROVAL OF THE OWNER'S REPRESENTATIVE AT THE SITE. PLANTS WHICH ARE REJECTED SHALL BE REMOVED FROM THE SITE IMMEDIATELY AND REPLACED AT NO ADDITIONAL COST TO THE OWNER.
6. ALL TREES AND SHRUBS TO BE BALLED IN BURLAP OR CONTAINERIZED.
7. MULCH FOR PLANTED AREAS TO BE AGED SPRUCE AND FIR BARK, PARTIALLY DECOMPOSED, DARK BROWN IN COLOR AND FREE OF WOOD CHIPS THICKER THAN 1/4 INCH.
8. CONTRACTOR SHALL MAINTAIN POSITIVE DRAINAGE AWAY FROM ALL BUILDING FOUNDATIONS, STRUCTURES AND PLANTING BEDS.
9. NO PLANTS SHALL BE PLANTED BEFORE ACCEPTANCE OF ROUGH GRADING AND BEFORE CONSTRUCTION HAS BEEN COMPLETED IN THE IMMEDIATE AREA.
10. ALL TREES SHALL BEGIN BRANCHING AT 6' HT. MIN.
11. ALL PLANT MATERIAL OR REPRESENTATIVE SAMPLES SHALL BE LEGIBLY TAGGED WITH PROPER COMMON AND BOTANICAL NAMES. TAGS SHALL REMAIN ON THE PLANTS UNTIL FINAL ACCEPTANCE.
12. CONTRACTOR SHALL LOAM DISTURBED AREAS AS FOLLOWS:
    - LAWN AREAS 6" DEPTH OF TOPSOIL
    - CURBED PARKING LOT ISLANDS 24" DEPTH OF TOPSOIL
13. SEED MIXTURE FOR LAWN AREAS SHALL BE (SEED TYPE % BY WEIGHT):

CREEPING RED FESCUE (MIN. 2 VARIETIES)	55 %
KENTUCKY BLUEGRASS (MIN. 2 VARIETIES)	30 %
PERENNIAL RYE GRASS	15 %
SEEDING RATE PER	1000 SQ.FT. 3 LBS. MIN.

14. CONTRACTOR SHALL BEGIN MAINTENANCE IMMEDIATELY AFTER PLANTING AND WILL CONTINUE UNTIL FINAL ACCEPTANCE. CONTRACTOR SHALL BE RESPONSIBLE FOR ALL MEANS AND METHODS OF WATERING AND MAINTENANCE.
15. THE LANDSCAPE CONTRACTOR SHALL GUARANTEE ALL PLANT MATERIALS FOR ONE (1) FULL YEAR FROM DATE OF FINAL ACCEPTANCE.
16. SHEET C1.2 SHOWS EXISTING CONDITIONS. WHERE EXISTING CONDITIONS LIE UNDER OR ARE IMPINGED UPON BY PROPOSED BUILDING AND OR SITE ELEMENTS, THE EXISTING CONDITION WILL BE REMOVED, ABANDONED AND OR CAPPED OR DEMOLISHED AS REQUIRED.
17. SHOULD SIGNIFICANT VEGETATION BE HARMED OR REMOVED DURING CONSTRUCTION BEYOND THAT SHOWN ON THE PLAN, ADDITIONAL PLANTING WILL BE REQUIRED PER THE CITY ARBORIST.
18. WETLAND PLANTS:
    1/3 OF EACH OF THE FOLLOWING SPECIES AT 12" O.C., STAGGERED, THROUGHOUT THE TWO BASINS (3,400 S.F.±)

    REEDS (JUNCUS EFFUSUS)
    CATTAILS (TYPHA LATIFOLIA)
    BULRUSH (SCIRPUS)

    PHRAGMITES (REED) IS VERY INVASIVE AND IS NOT RECOMMENDED.

EROSION CONTROL NOTES:

1. THE CONTRACTOR SHALL INSTALL ALL EROSION AND SEDIMENTATION CONTROL MEASURES PRIOR TO CONSTRUCTION. ALL EROSION CONTROL MEASURES SHALL BE INSTALLED IN ACCORDANCE WITH THE DRAWINGS, SPECIFICATIONS.
2. THE CONTRACTOR SHALL COMPLY WITH THE MAINE EROSION AND SEDIMENT CONTROL BMPS MANUAL AS PUBLISHED BY THE MAINE DEPARTMENT OF ENVIRONMENTAL PROTECTION'S BUREAU OF LAND AND WATER QUALITY, MARCH 2013 OR LATEST EDITION.
3. ALL EROSION CONTROL MEASURES SHALL BE INSTALLED PRIOR TO ANY SITE EXCAVATION OR REGRADING. ALL DISTURBED AREAS ON SITE NOT COVERED BY BUILDINGS OR PAVED AREAS SHALL BE STABILIZED WITH LOAM AND SEED, OR BY OTHER METHODS AS REQUIRED BY THE WRITTEN EROSION CONTROL PLAN.
4. DISTURBED AREAS SHALL BE LIMITED TO ONLY THOSE AREAS UNDER ACTIVE CONSTRUCTION. FOR DISTURBED AREAS THAT ARE NOT UNDER ACTIVE CONSTRUCTION AND THAT CAN NOT YET UNDERGO FINAL GRADING, INSTALL TEMPORARY SEEDING AND MULCHING (REFER TO WRITTEN EROSION CONTROL PLAN).
5. PERMANENT SEEDING OR STABILIZATION SHALL BE CARRIED OUT IMMEDIATELY AFTER FINAL GRADING IS COMPLETED, OR TEMPORARY MEASURES SHALL BE APPLIED SUCH AS MULCHING OR SEEDING UNTIL PERMANENT STABILIZATION MEASURES ARE IN PLACE.
6. TOPSOIL SHALL BE STOCKPILED IN AREAS AWAY FROM PROTECTED NATURAL RESOURCES AND IN AREAS WHICH HAVE A MINIMAL POTENTIAL FOR EROSION; REFER TO OWNER FOR LOCATION OF MATERIAL STOCKPILE.
7. ALL EROSION CONTROL MEASURES SHALL BE ROUTINELY INSPECTED AND REPAIRED IN ACCORDANCE WITH THE WRITTEN EROSION CONTROL PLAN FOR THE DURATION OF THE PROJECT UNTIL ALL AREAS ARE STABILIZED. REMOVE ACCUMULATED SILT AND SEDIMENT AS NEEDED AND MAINTAIN SILT FENCE IN GOOD, OPERABLE CONDITION.

EROSION CONTROL LEGEND

EROSION CONTROL BERM	ECB
STONE CHECKDAM	
TURF REINFORCEMENT MATTING	
CATCHBASIN INLET PROTECTION	
CONSTRUCTION ENTRANCE	
CONSTRUCTION FENCE	x x x

GRAPHIC SCALE

30 0 15 30 60 120

1 inch = 30 ft.

WALSH
ENGINEERING ASSOCIATES, INC.
One Karen Dr., Suite 2A | Westbrook, Maine 04092
ph: 207.553.9898 | www.walsh-eng.com

Copyright © 2018

STATE OF MAINE
THOMAS S. GREER
No. 4206
LICENSED PROFESSIONAL ENGINEER
8/29/19

PORTLAND MOTOR CLUB
293 PRESUMPSCOT STREET
PORTLAND, MAINE

WALDRON REALTY, LLC
178 U.S. ROUTE ONE
FALMOUTH, MAINE

Rev.	Date	Description	Drawn	Check

Sheet Title:
EROSION CONTROL PLAN & LANDSCAPE PLAN

Job No.:	537
Date:	AUG. 29, 2019
Scale:	AS SHOWN
Drawn:	JDC
Checked:	TSG

Sheet No.: C1.4

© 2017 - 293 Presumpscot Street - CAD/07 - BASE.dwg, ppf date: 8/30/2019 3:10 PM

LEGEND

- Iron pin found
- Monument found
- Catch basin
- Water valve
- Fire hydrant
- Utility pole
- Guy wire
- Pylon sign
- Sign
- Edge of pavement
- Curb (granite, unless noted)
- Edge of gravel
- Abutter's line/ Deed line
- Property line
- Easement line
- Right of way line
- OH — Overhead utility wires
- Chain link fence
- N/F — Now or formerly of
- 1234/56 — Book and page reference
- Sewer manhole
- Electrical manhole
- Guard rail
- Existing building

GRID

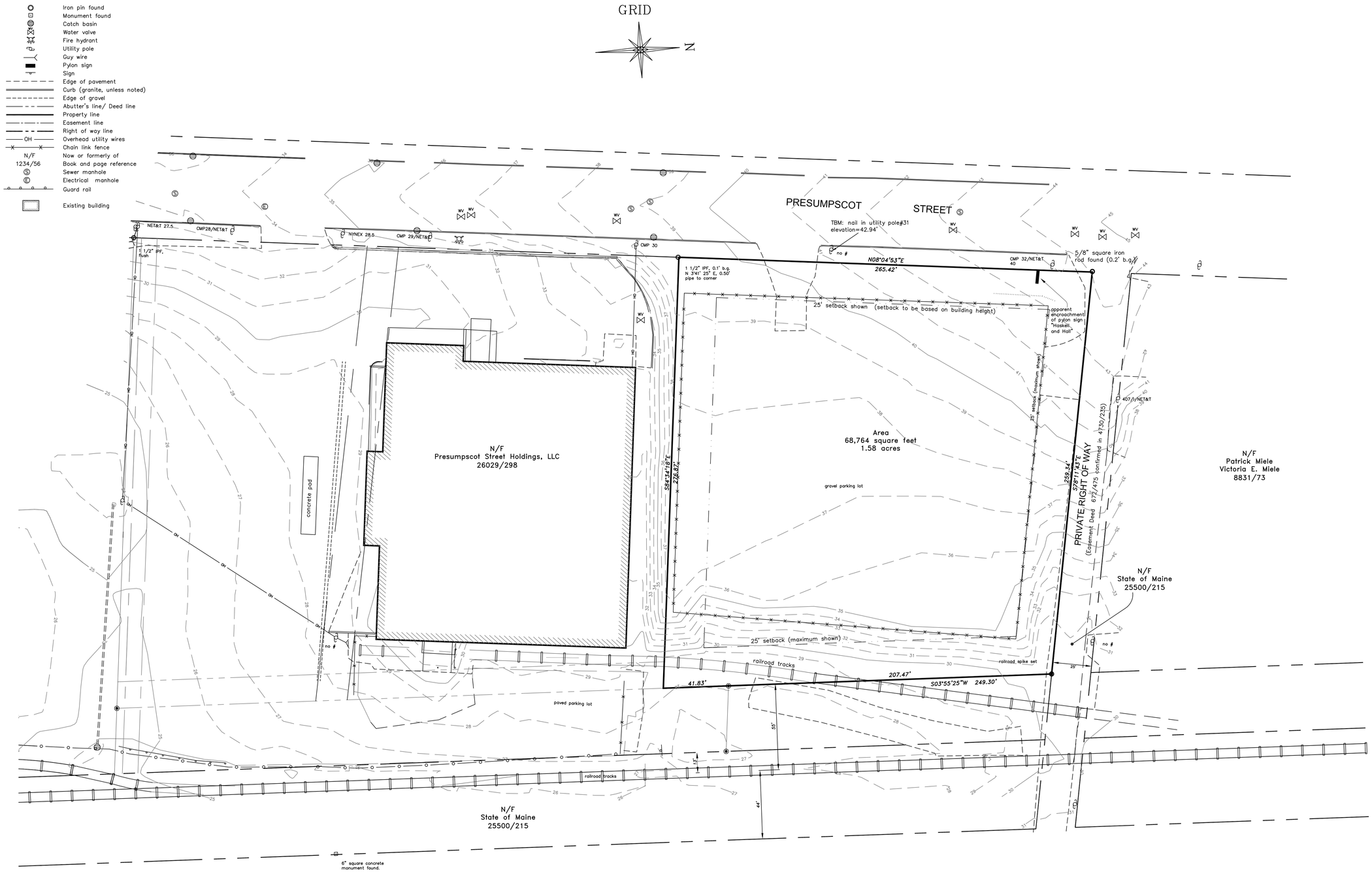

SCALE IN FEET

30 0 30 60

1" = 30'

NOTES

(1) Book and Page (Book/Page) references are to the Cumberland County Registry of Deeds, unless otherwise specified.

(2) Bearings are referenced to Grid North Maine State Plane Coordinate System West Zone NAD83 based on information provided by the City of Portland Public Works Department, Engineering Division.

(3) Elevations are based on the City of Portland Vertical Datum per benchmark information provided by the City of Portland Public Works Department, Engineering Division.

EASEMENTS AND ENCUMBRANCES
(synopsis only – see deeds for detail)

1) Parcel subject to restrictions and conditions including but not limited to:
– condition that no building be erected within 30 feet of Canadian National Railway and no vehicle be parked within 20 feet of said Railway.
– perpetual reservation of use of rail sidings by Canadian National Railway.
– condition that fences be erected upon request of Canadian National Railway.

2) Parcel may be subject to a pole line easement conveyed to Central Maine Power Company (CMP) and New England Telephone and Telegraph Company (NET&T) as described in Book 6683, Page 153 from pole #28.1 northeasterly to proposed pole # 28.2.

3) Parcel may be subject to a pole line easement conveyed to Central Maine Power Company as described in Book 6103, Page 55 from pole #8 Presumpscot Street easterly to proposed pole #28.1.

4) Parcel may be subject to an easement conveyed to CMP and NET&T as described in Book 4079, Page 46 from Presumpscot Street southeasterly to a transformer on concrete pad.

5) Parcel may be subject to an easement including building restrictions as described in Book 15320, Page 9 for a line connecting pole/pad 27 Presumpscot Street and extending to pole/pad 27.1.

PLAN REFERENCES

1) Plan of Property made for Fore Street Associates by Titcomb Associates dated 11/1/1983.

2) Plan of Property made for Nappi Distributors by Titcomb Associates dated 10/25/1979.

3) Plan made for Cumberland and York Distributors made by John P. McGonagle Jr. dated 10/10/1967.

4) Plan made for Nappi Distributors Portland Maine dated 8/31/79 recorded in Plan Book 125, Page 58.

5) Plan of House Lots Laid out for Eastern Forge Company in Deering by Silas Skillen dated 12/8/1890 and recorded in Plan Book 7, Page 8.

6) Plan of Eastern Forge Company Land Deering Maine dated 3/23/1892 and recorded in Plan Book 7, Page 34A.

7) Plan of Land Owned by G.F. and E.C. Swift of Chicago recorded in Plan Book 7, Page 65.

8) Plan made for Nappi Distributors by John P. McGonagle Jr. dated 12/8/1969 recorded in Plan Book 82, Page 23.

9) Plan made for Doors and Mouldings of Maine Inc. by H.I. and E.C. Jordan Surveyors dated 2/20/1970 and recorded in Plan Book 83, Page 9.

10) Information from air photos derived from the Maine Geographic Information System Web Site.

11) Plan of Land owned by Consolidated Rendering Company dated December 1945 and corrected to December. 1946.

12) Canadian National Railroad Plan 2189–A.

13) Plan of Land of Nappi Distributors made for William G. Waldron, Jr. by Titcomb Associates dated January 9, 2008.

OWNERS OF RECORD

Presumpscot Street Holding, LLC
Book 26029, Page 298 (Parcel Two)
68,764 s.f. (1.58 acres)

CERTIFICATION

This survey conforms to the current standards of practice set forth by the Maine State Board of Licensure for Land Surveyors.

Rex J. Croteau, P.L.S. #2273

STATE OF MAINE REX J. CROTEAU 2273 LICENSED LAND SURVEYOR

PLAN OF
Existing Conditions Survey
275 Presumpscot Street — Portland, Maine

MADE FOR
Pinkham & Greer Consulting Engineers
28 Vannah Avenue — Portland, Maine

JOB# 207097	DATE: October 16, 2014	SCALE: 1" 30'
BOOK# 832/858		
DWG: Parcel 2		
FILE# 938		

Titcomb Associates
133 Gray Road, Falmouth, Maine 04105
(207)797-9199 www.titcombsurvey.com

Code Analysis - Portland Motor Club - Storage Facility

293 Presumpscot Street, Portland Maine

A new one and a half story building with a small mezzanine observation deck [1,036 sf] on the first floor of 34,000 sf at street level that provides a public entrance and two front garages to store boats, recreational vehicles and campers located in Portland, ME. The basement level of 18,067 sf will store vehicles only with access by two rear garages and exits. The total warehouse space of both floors equals 52,067 sf. The building will be fully sprinklered and ADA Compliant.

IBC 2015 Code Review

Chapter 3 Use and Occupancy Classification

	Basement, First Floor, Mezzanine
Section 311.2	Group S-1 Boat and vehicle storage
	Group B Offices, Waiting, Mezzanine

Chapter 5 General Building Heights and Areas

Construction Type	Type IIB – Sprinklered [S]
	Note: most restrictive used from Tables
Table 504.3 Allowable Building Height	S-1, B [S] – 75'
	Height of new Building = 51'-2" – OK
Table 504.4 Allowable No. of Stories	S-1 [S] 3 Stories above grade plane
	New Building is two stories – OK
Section 505.2 Mezzanines	A mezzanine in compliance with A505.2 shall be considered a portion of the story below. Such mezzanines shall not contribute to either the building area or number of stories as regulated by Section 503.1. The area of the mezzanine shall be included in determining the fire area. The clear height above and below the mezzanine floor construction shall not be less than 7 feet.
Section 505.2.1 Area Limitations	The aggregate area of a mezzanine within a room shall not be greater than 1/3 of the floor area of that room or space in which they are located. OK
Section 505.2.2 Means of Egress	The means of egress for mezzanines shall comply with the applicable provisions of Chapter 10
Section 505.2.3 Openness	A mezzanine shall be open and unobstructed to the room in which such mezzanine is located except for walls not more the 42" in height, columns and posts.
Table 506.2 Allowable Area Factor	S-1 [S] 52,500 sf per floor
	New Building is 34,000 sf per floor – OK
Table 508.3 Mixed Use and Occupancy	Comply with most restrictive allowances per Section 403 and Chapter 9
Section 508.2.3 Allowable Building Area	The allowable area of the building shall be based on the applicable provisions of Section 506 for the main occupancy of the building. Aggregate accessory occupancies shall not occupy more than 10 percent of the floor area of the story in which they are located and shall not exceed the tabular values for nonsprinklered buildings in Table 506.2 for each accessory occupancy
	Main Occupancy S-1 10 percent of 34,000 sf = 3,400 sf max. Accessory Occupancy B First floor offices and mezzanine total 2,072 sf. Allowable OK
Section 508.2.4 Separation of Occupancies	No separation is required between accessory occupancies and the main occupancy
Table 508.4	S-1 and B occupancies are not required to be separated

Chapter 6 Types of Construction

Table 601 Ratings of Structure Elements	
	Construction Type IIB
Structural frame	0 Hour – OK
Exterior bearing walls	0 hr – OK
Interior bearing walls	0 hr – OK
Nonbearing walls and partitions	0 hr – OK
Floor construction	0 hr – OK
Roof construction	0 hr – OK
Table 602 Fire Resistance Rating Requirements for Exterior Walls	
Less than 5'	2 Hour
Less than 10'	1 Hour
more than 10' less than 30'	0 Hour
Greater than 30'	0 Hour
Section 603 – Combustible material in Types I and II construction	
Section 603.1 Allowable materials	Comply with materials noted.

Chapter 7 Fire and Smoke Protection Features

Table 705.8 Max Area of Exterior Wall Openings Based on Fire Separation Distance & Degree of Opening Protection. Unprotected=UP, Sprinklered=S	
0 to <3' (UP, S)	Not Permitted
3' to <5' (UP, S)	15%
5' to <10' (UP, S)	25%
10' to <15' (UP, S)	45%
15' to <20' (UP, S)	75%
20' to <25' (UP, S)	No Limit
25' to <30' (UP, S)	No Limit
30' or Greater (UP, S)	No Limit

Chapter 8 Interior Finishes

Section 803.1.1 Interior wall and ceiling finish material	
Class A	Flame spread index 0–25; smoke–developed index 0–450
Class B	Flame spread index 26–75; smoke–developed index 0–450
Class C	Flame spread index 76–200; smoke–developed index 0–450
Section 803.11 Interior Wall and Ceiling Finish Requirements by Occupancy (S–1 – Sprinklered)	
Exit enclosures and passageways	Class C
Corridors	Class C
Rooms and enclosed spaces	Class C
Section 805 Combustible Materials In Types 1 a	
Section 805.1	Comply with noted materials.
Section 806 Decorative Materials and Trim (B)	
Curtains, draperies, hangings and other decorative materials	Shall meet flame propagation performance criteria of NFPA 701

Chapter 9 Fire Protective Systems

Section 903.1	Automatic sprinkler systems shall comply with this section

Chapter 10 Means of Egress

Section 1004.1.1.2 Adjacent levels for mezzanines	That portion of the occupant load of the mezzanine with required egress through a room, area or space on an adjacent level shall be added to the occupant load of that room, area or space
Section 1004.6 Multiple Occupancies	Where a building contains two or more occupancies, the means of egress requirements shall apply to each portion of the building based on the occupancy of that space. Where two or more occupancies utilize portions of the same mean of egress system, those egress components shall meet the more stringent requirements of all occupancies that are served
Table 1004.1.2 Occupant Load	
Space Function –	Load Factor – Sq. Ft. Per Pserson
Warehouse	500 gross x 49,623 sf = 99 occupants
Business	100 gross x 1,036 sf = 10 occupants
Observation Deck [Mezzanine]	5 Occupants
	(See Life Safety Plan for locations)
Posted Occupant Load	114 Occupants
Egress Width	
Section 1005.3.1 Stairways.	.30" per person
Section 1005.3.2 Doors, ramps, and corridors	.20" per person
Section 1005.7.1 Door encroachment	Doors and handrails shall not reduce required means of egress by more than 7". Doors in any position shall not reduce the required width by more than one–half.
Table 1006.2.1 Spaces with One Exit	
Occupancy S–1 (Sprinklered)	Max occupant load = 29 – N/A
	Common path of egress = 100'
Occupancy B (Sprinklered)	Maximum occupant load = 49 – OK
	Common path of egress = 100'
Section 1008.2.1 Illumination Level	Means of egress illumination level shall not be less than 1 foot–candle at the walking surface.
Section 1008.3 Illumination Emergency Power	Power supply for means of egress illumination shall normally be provided by premises's electrical power.
Section 1008.3.1 Illumination Emergency Power	In power failure event, automatic illumination shall include corridors, exit enclosures, exit passageways, interior exit discharge elements for a duration of 90 minutes with battery backup or on–site generator.
Section 1009.3 Accessible Means of Egress – Stairways	
In order to be considered part of an accessible means of egress, a stairway between stories shall have a clear width of 48" minimum between handrails and shall either incorporate an area of refuge within an enlarged floor level landing or shall be accessed from an area of refuge complying with Section 1009.6. Exit stairways that connect levels in the same story are not permitted as part of an accessible means of egress.	
Exceptions	1. Exit stairways providing means of egress from mezzanines are permitted as part of an accessible means of egress
	5. Areas of refuge are not required at stairways in buildings equipped throughout with an automatic sprinkler system installed in accordance with Section 903.3.1.1 or 903.3.1.2
Section 1010.1.1.1 Projections into Clear Width	No projections into required clear width allowed lower than 34" above the floor. Shall not exceed 4" between 34" and 80" above the floor.
	Exceptions: Door closers and door stops shall be permitted to be 78" min above the floor.
Section 1010.1.2.1 Door swing	Door shall swing in the direction of egress travel where serving an occupant load of 50 or more persons.
Section 1010.1.5 Floor Elevation	There shall be a floor or landing on each side of a door and shall be at the same elevation. Exterior may slope .25 / 12 units (2%).
Section 1010.1.7 Thresholds	Thresholds shall not exceed 1/2"
Section 1010.1.10 Panic Hardware	Doors serving rooms or spaces with 50 or more occupants shall not be provided with a latch or lock unless it has panic hardware.
Section 1011.8 Vertical Rise	Max 12' vertical rise between landings or levels
Section 1011.11 Handrails	Handrails shall be on both sides of stairways
Section 1014 Handrails	Between 34" and 38" above nosing
	Handrail gripping surfaces shall be continuous, without interruption
	Handrails shall return to a wall, guard, or continuous.
	Handrails shall extend 12" horizontally above top riser and continue to slope for the depth of one tread beyond the bottom riser
Section 1015.1 Guards	
When more than 30" above floor	Guards required
Height	3'–6"
Section 1016.2.1 Egress through intervening spaces	Egress from a room or space shall not pass through adjoining or intervening rooms or areas, except where such adjoining rooms or areas and the area served are accessory to one or the other, are not a Group H occupancy and provide a discernable path of egress travel to an exit
Section 1017 Exit Access Travel Distance * Note IBC Maine adaptation includes a note to reference "See NFPA 101–2009 Table A7.6"	
Occupancy S–1 (Sprinklered)	Not more than 250'
Occupancy B (Sprinklered)	Not more than 300'
Section 1019 Exit Access Stairs and Ramps	
Section 1019.1 General	Exit stairways and ramps serving as an exit access component in a means of egress system shall comply with the requirements of this section. The number of stories connected by exit access stairways and ramps shall include basements, but not mezzanines. Note: proposed stair between first floor and basement is a connecting stair only and not as a means of egress for either floor levels.
Section 1019.2 All Occupancies	Exit access stairways and ramps the serve floor levels within a single stair are not required to be enclosed
Section 1019.3	4. Exit stairways and ramps equipped throughout with an automatic sprinkler system in accordance with Section 903.3.1.1, where the area of the vertical opening between stories does not exceed twice the horizontal projected area of the stairway or ramp and the opening is protected by a draft curtain and closely spaced sprinklers in accordance with NFPA 13. Note – proposed stair connects two stories only
Table 1020.1 Corridor Fire–Resistance Rating	
Occupancy B & S (Sprinklered)	0 Hour (Greater than 30 occupants) OK
Table 1020.4 Dead Ends	
Occupancy B & S (Sprinklered)	Maximum 50'
Sec 1028 Exit Discharge	
Exits shall discharge directly to the exterior of the building and shall be at grade or direct access to grade.	
Sec 1028.1 Exceptions	Max of 50% occupants permitted to egress through areas of exit discharge
	Free and unobstructed path of travel and exit is readily visible
	Area of exit discharge is 1 hour separated from areas below
	Egress path is sprinklered
	Max of 50% occupants permitted to egress through a vestibule
	Entire area of vestibule is 1 hour separated from areas below
	Depth from exterior of building is not greater than 10' and length is not greater than 30'
	Area is separated from remainder of exit discharge with equivalent of wired glass in steel frames
	Area is used only for mean of egress and exits directly to outside.

Chapter 11 Accessibility

Sec 1105.1 Public entrance	Min 60% entrances
Table 1106.1 Accessible Parking Spaces	
Total parking spaces 1 to 25	Required min accessible spaces, 1
26 to 50	2
51 to 75	3
76 to 100	4
101 to 150	5
Section 1006.5 Van Spaces	
For every 6 accessible spaces	At least 1 shall be van–accessible

NFPA 101 Life Safety Code Review

Section 3.3.178.15 – Storage Occupancy	An occupancy used primarily for the storage or sheltering of goods, merchandise, products or vehicles
Section 3.3.178.3 – Business Occupancy	An occupancy used for the transaction of business other than mercantile
Section 3.3.178.10 – Mixed Occupancy	A multiple occupancy where the occupancies are intermingled

Chapter 6 Classification of Occupancy and Hazard of Contents

Section 6.1.11 Business	An occupancy use for the transaction of business other than mercantile
Section 6.1.13.1 Storage	An occupancy used primarily for the storage or sheltering of goods, merchandise, products, or vehicles
Section 6.1.14.2 Mixed Occupancies	Where exit access from an occupancy traverses another occupancy, the multiple occupancy shall be treated as a mixed occupancy
Section 6.1.14.3	Where incidental to another occupancy, areas used as follows shall be permitted to be considered part of the predominant occupancy and shall be subject to the provisions of the Code that apply to the dominant occupancy: (1) Mercantile, business, industrial or storage use (2) Non–residential use with an occupant load fewer than that established by Section 6.1 for occupancy threshold
Section 6.1.14.3 Mixed Occupancies	A multiple occupancy where the occupancies are intermingled.
Section 6.1.14.3.2	The means of egress facilities, construction type, protection, and other safeguards in the building shall comply with the most restrictive fire and life safety requirements of the occupancies involved
Table 6.1.14.4.1 Required Separation of Occupancies	Mixed occupancies Business and Low Hazard Storage require to 2 hour separation – reduced to 1 hour by having an approved and fully sprinklered building

Chapter 7 Means of Egress

Section 7.1.3.1 Exit Access Corridor	1 Hour when occupant load exceeds 30 – N/A
Section 7.1.3.2 Exits	Indicates 1 hour separation for exits if 3 or less stories
	Openings in exit enclosures shall be limited to door assemblies from normally occupied spaces and corridors
	An exit enclosure shall provide a continuous protected path of travel to an exit discharge
Section 7.1.5.1 Means of egress headroom	Not less than 7'–6" with projections not less than 6'–8"
Section 7.2.1.4.3 Door Leaf Encroachment	During its swing, any door leaf in a means of egress shall not leave less than 1/2 of the required width of a corridor, and shall not project more than 7" into the required width when fully opened.
Section 7.2.2.1.1 Stairs	Stairs used as a component in the means of egress shall conform to the general requirements of Section 7.1 and to the special requirements of 7.2.2 – N/A Connecting stairs only
Section 7.2.2.5.1.2 Enclosures and Protection of Stairs	Inside stairs, other than those serving as an exit or exit components, shall be protected in accordance with Section 8.6
Table 7.3.1.2 Occupant Load	Business 100 sf & Storage N/A
First Floor (refer to drawings)	100 sf per person
Basement (refer to drawings)	N/A
Total Occupants (refer to drawings)	30 Maximum
Section 7.7.2 Discharge Through Areas on Level of Exit Discharge (LED)	Not more than 50% of the required number of exits and egress capacity shall discharge through LED
	Discharge shall lead to a free and unobstructed way to the exterior of the building.
	LED shall be protected by a sprinkler system.

Chapter 8 Features of Fire Protection

Section 8.6.5 Required Fire Resistance Rating	The minimum fire resistance rating for the enclosure of floor openings in new construction piercing two adjacent floors require one hour fire barriers
Section 8.6.6 Communicating Space	Unless prohibited by Chapters 11 through 43, unenclosed floor openings forming a communicating space between floor levels shall be permitted, provided that the following conditions are met: (1) The communicating space does not connect more than three contiguous stories (2) the lowest or next–to–lowest story within the communicating space is a street floor (3) The entire floor area of the communicating space is open and unobstructed, such that a fire in any part of the space will be readily obvious to the occupants of the space prior to the time it becomes an occupant hazard (4) The communicating space is separated from the remainder of the building by fire barriers not less than a 1–hour fire resistance rating, unless one of the following is met: (a) In buildings protected throughout by an approved automatic sprinkler system in accordance with Section 9.7, a smoke barrier in accordance with with Section 8.5 shall be permitted to serve as the separation required by 8.6.6(4) (b) The requirement of 8.6.6(4) shall not apply to residential housing units of detention [N/A] (5) The communicating space has ordinary hazard contents protected throughout by an approved automatic sprinkler system in accordance with Section 9.7 or has only low hazard contents (See 6.2.2) (6) Egress capacity is sufficient to allow all the occupants of all levels within the communicating space to simultaneously egress the communicating space by considering it as a single floor area in determining the required egress capacity (7) Each occupant within the communicating space has access to not less than one exit without having to traverse another story within the communicating space (8) Each occupant not in the communicating space has access to not less than one exit without having to enter the communicating space
Section 8.6.8 Convenience Openings	A vertical opening serving as other than an exit enclosure, connecting only two adjacent stories and piercing only one floor, shall be permitted to be open to one of the two stories
Section 8.6.8.2	Where permitted in Chapters 11 through 43, unenclosed vertical openings not concealed within the building construction shall be permitted as follows: (1) Such openings shall connect not more than two adjacent stories (one floor pierced only) (2) Such openings shall be separated from unprotected vertical openings serving other floors by a barrier complying with 8.6.5 (3) Such openings shall be separated from corridors (4) In new construction, the convenience opening shall be separated from the corridor referenced in 8.6.8.2(3) by a smoke partition, unless Chapters 11 through 43 require the corridor to have a fire resistance rating (5) Such openings shall not serve as a required means of egress
Section 8.6.9.2.1 Mezzanines – Area Limitations	The aggregate area of mezzanines located within a room, other than those located in special purpose industrial occupancies, hall not exceed one–third the open area of the room in which the mezzanines are located. Enclosed space shall not be included in a determination of the size of the room in which the mezzanine is located
Section 8.6.9.3.1 Openness	All portions of a mezzanine, other than walls not more than 42 in. high, columns and posts, shall be open to and unobstructed from the room in which the mezzanine is located, unless the occupant load of the aggregate area of the enclosed space does not exceed 10

Chapter 9 Building Service and Fire Protection Equipment

Section 9.6.5 Fire Safety Functions	
9.7.1.1 Automatic Sprinklers	Automatic sprinkler system to be installed in accordance with NFPA 13.

Chapter 38 New Business Occupancies

Section 38.1.1.1	The requirements of this chapter shall apply to new buildings or portions thereof used as business occupancies
Section 38.1.2.1.2 Multiple Occupancies	Where there are differences in the specific requirements in this chapter and provisions for mixed occupancies or separated occupancies as specified in 6.1.14.3 and 6.1.14.4, the requirements of this chapter shall apply
Section 38.1.1.14 Classification of Occupancy	Business occupancies shall include all buildings and structures or parts thereof with occupancy as defined in 6.1.11
Section 38.1.7 Occupant Load	The occupant load, in number of persons whom means of egress and other provisions are required, shall be determined on the basis of the occupant load factors of Table 7.3.1.2 that are characteristic of the use of the space, or shall be determined as the maximum probable population of the space under consideration, whichever is greater
Section 38.2.4.5 Number of Exits	A single means of egress shall be permitted from a mezzanine within a business occupancy, provided that the common path of travel does not exceed 75 ft, or 100 ft if protected throughout by an approved, supervised automatic sprinkler system in accordance with 9.7.1.1(1)
Section 38.2.4.6 Number of Exits	A single exit shall be permitted for a single tenant space/building two or fewer stories in height, provided that both of the following criteria are met: (1) The building is protected throughout by an approved, supervised automatic sprinkler system in accordance with 9.7.1.1(1) (2) The total travel distance does not exceed 100 ft
Arrangement Means of Egress	
Section 38.2.5	All means of egress shall be in accordance with Chapter 7 and this Chapter (38)
Section 38.2.4.1 Number of Exits	The number of means of egress shall comply with 38.2.4.5 and 38.2.4.6
Section 38.2.5.2.1 Dead End Corridors	In buildings protected throughout by an approved, supervised automatic sprinkler system in accordance with 9.7.1.1(1), dead–end corridors shall not exceed 50 ft
Section 38.2.5.3.1 Common Path of Travel	In buildings protected throughout by an approved, supervised automatic sprinkler system in accordance with 9.7.1.1(1), common path of travel shall not exceed 100 ft
Section 38.2.5.3.2	Common path of travel shall not exceed 100 ft within a single tenant space have an occupant load not exceeding 30 persons
Travel Distance to Exits	
Section 38.2.6.1	Travel distance shall be measured in accordance with Section 7.6
Section 38.2.6.3	Travel distance shall not exceed 300 ft in business occupancies protected throughout by an approved, supervised automatic sprinkler system in accordance with 9.7.1.1(1)
Section 38.3.1.1 Protection of Vertical Openings	Vertical openings shall be enclosed or protected in accordance with Section 8.6
Interior wall and ceiling finish	
Section 38.3.3.2.1	Interior wall and ceiling finish materials complying with Section 10.2 shall be Class A, B or C in operating areas and shall be as required by 7.1.4 in exit enclosures.
Section 38.3.3.2.2	Interior wall and ceiling finishes shall be Class A, Class B or Class C in areas other than those specified in 38.3.3.2.1

Chapter 42 Storage Occupancies

Section 42.2.1.2 Application	Storage occupancies shall include all buildings or structures primarily used for the storage or sheltering of goods, merchandise, products or vehicles
Section 42.1.2 Multiple Occupancies	All multiple occupancies shall be in accordance with 6.1.14
Section 42.1.4.1 Classification of Occupancy	Storage occupancies shall include all buildings and structures or parts thereof with occupancy as defined in 6.1.13
Section 42.1.7 Occupant Load	The occupant load, in number of persons for whom means of egress and other provisions are required, shall be determined on the basis of the maximum probable population of the space under consideration
Section 42.2.4.1 Number of Means of Egress	(3) All buildings or structures shall have not less than two separate means of egress as remotely located from each other as practicable
Table 42.2.5 Arrangement Means of Egress – Ordinary Hazard Storage	Dead–end Corridor 100 ft maximum and common path of travel 100 ft maximum if protected throughout by an approved, supervised automatic sprinkler system in accordance with 9.7.1.1(1)
Table 42.2.6 Maximum Travel Distance to Exits – Ordinary Hazard Storage	400 ft maximum if protected throughout by an approved, supervised automatic sprinkler system in accordance with 9.7.1.1(1)
Section 42.3.1 Protection of Vertical Openings	Any vertical opening shall be protected in accordance with Section 8.6
Interior wall and ceiling finish	
Section 42.3.3.2.1	Interior wall and ceiling finish materials complying with Section 10.2 shall be Class A, B or C in operating areas and shall be as required by 7.1.4 in exit enclosures.
Section 42.3.3.2.2	Interior wall and ceiling finishes shall be Class A, Class B or Class C in areas other than those specified in 42.3.3.2.1

Maine State Plumbing Code (2015 Uniform Plumbing Code)

Table 422.1 Minimum Plumbing Facilities	
Total Mixed Occupancy Load	Total 114 Occupants
B– Business	15 Occupants [8 Male / 7 Female]
	Male: 1–50 – 1 WC required
	Female: 1–15 – 1 WC required
	Male: 1–100 – 1 Urinal required
	Male: 1–75 – 1 Lavatory required
	Female: 1–50 – 1 Lavatory required
	1–150 – 1 drinking fountain required
	1 Service Sink required
S–1 Storage	99 Occupants [50 Male / 49 Female]
	Male: 1–100 – 1 WC required
	Female: 1–100 – 1 WC required
	Male: 1–200 – 1 Lavatory required
	Female: 1–200 – 1 Lavatory required
	1 Unisex WC added in basement, first floor to share Business facilities
	Drinking fountain: 1 per 400
	1 Service sink required

Energy Efficiency - IECC 2009

Opaque Assembly Requirements	
Climate Zone	6
Roofs	
Metal Buildings	R–13 + R–19 (With R–5 Thermal blocks
Attic and Other	R–38
Walls above grade	
Metal Building	R–13 + R–5.6ci
Slab on Grade	
Heated Slabs	R–15 for 24 In. below

David Matero
Architecture
100 Front Street
Suite 40
Bath, Maine 04530
207.389.4278
info@davidmatero.com

Consultants

Walsh Engineering Associates
Civil Engineering

Revisions

.

Portland Motor Club Storage Facility

293 Presumpscot Street
Portland Maine

LICENSED ARCHITECT
DAVID S. MATERO
No. 2705
STATE OF MAINE

Job Number: 19.012
Date: 2019.08.27
Scale: NTS

Drawing Title:

Code Analysis

R.1
Portland Code Review

Copyright 2019 David Matero Architecture, LLC

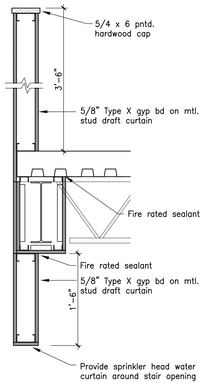

A Draft Curtain Detail

Scale: 1" = 1'-0"

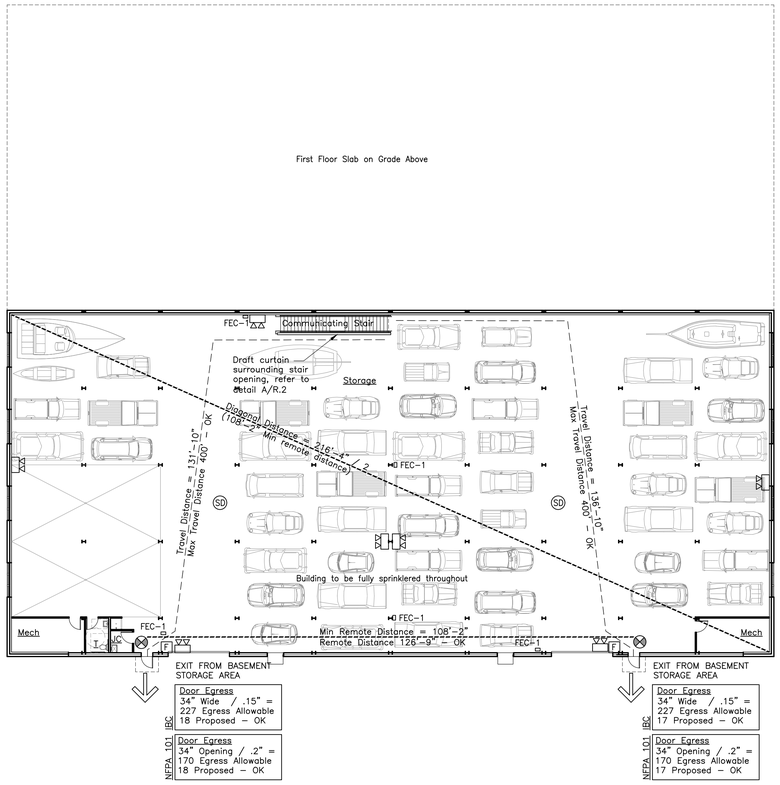

3 Basement Plan

Scale: 1/16" = 1'-0"

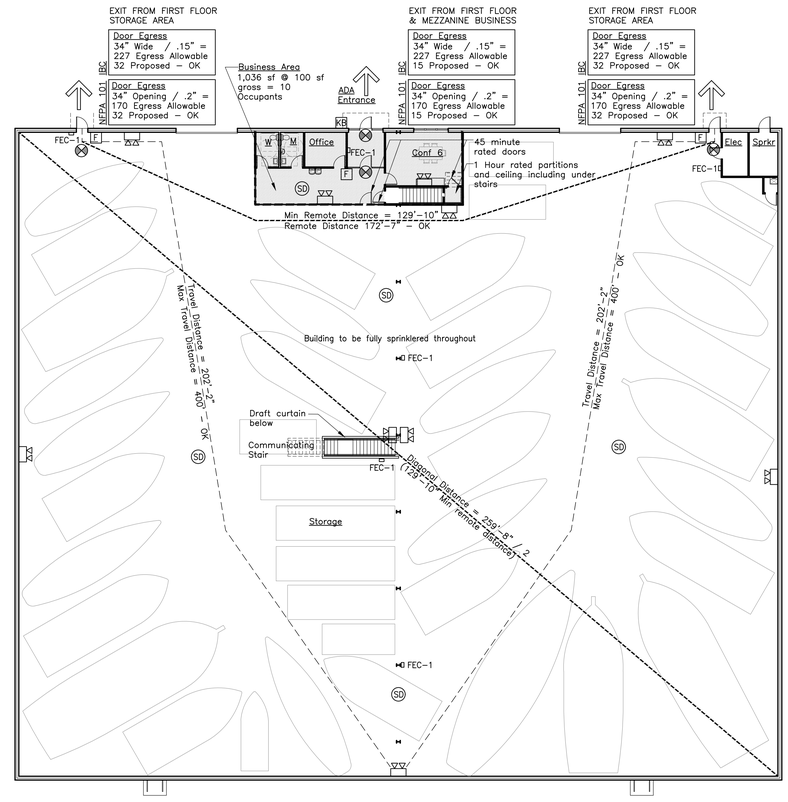

1 First Floor Plan

Scale: 1/16" = 1'-0"

GENERAL NOTES - AUDIBLE NOTIFICATION

1. Audible sound level of fire alarm horns shall be at least 15 dB above the average ambient sound level or 5 dB above the maximum sound level having a duration of at least 60 seconds.
2. An average ambient sound level greater than 105 dBA shall require the use of visible notification.
3. The total sound pressure level produced by combining the ambient sounds pressure level with all audible notification appliances operating shall not exceed 110 dBA at the min hearing distance.

Strobe Quantity and Intensity for Wall Mounted Appliances

Room Size	Effective Intensity (cd). One light per room	Effective Intensity (cd). Four lights per room, one light per wall
20 x 20	15	NA
28 x 28	30	NA
30 x 30	34	NA
40 x 40	60	15
45 x 45	75	19
50 x 50	94	30
54 x 54	110	30
55 x 55	115	30
60 x 60	135	30
63 x 63	150	37
68 x 68	177	43
70 x 70	184	60
80 x 80	240	60
90 x 90	304	95
100 x 100	375	95
110 x 110	455	135
120 x 120	540	135
130 x 130	635	185

GENERAL NOTES - VISUAL NOTIFICATION

1. Flash rate of strobe shall not exceed two flashes per second (2Hz) nor be less than one flash every second (1Hz) throughout the listed voltage range of the appliance.
2. Maximum pulse duration shall be 0.2 seconds with a maximum duty cycle of 40%
3. Wall mounted strobes shall be mounted such that the entire lens is not less than 80" and not greater then 96" above the finished floor or at mounting height specified using the performance-based alternative.
4. If two groups of strobes are in the same room or visible, each group shall be synchronized, including if strobes are operated by separate systems.
5. In square rooms w/ strobes not centered or in non-square rooms, the effective intensity from one strobe shall be determined by the max room size dimension by measuring the distance to the farthest wall or by doubling the distance to the farthest adjacent wall, whichever is greater.
6. Strobes shall be located not more than 15' from the end of a corridor with a separation not greater than 100' and shall flash in synchronization. The effective intensity shall be rated not less than 15 cd.

SYMBOL LEGEND

- LED Exit Light (unswitched)
- LED Exit Light with Directional Arrow (unswitched)
- Self Contained, wall-mounted, Emergency Lighting Unit with 2 Heads and battery backup
- Self Contained, ceiling-mounted, Emergency Lighting Unit with 2 Heads and battery backup
- Single Head Remote Emergency Light
- FA — Fire Alarm Audio/Visual, mount 6'-8" AFF, dB Level in Field
- SFA — Fire Alarm Visual Strobe only, Flush mount 6'-8" AFF, set Candela Level in Field according to code
- SD — System connected Smoke Detector, photoelectric type with Sounder base and carbon monoxide detector. Install per code.
- F — Fire Alarm pull station, mount 48" AFF
- FACP — Fire Alarm Control Panel Station
- KB — Knox Box (location and type to be approved by the required Fire Department)
- FEC-# — Fire extinguisher cabinet and type
- ETR — Existing to Remain
- MHO — Magnetic Hold Open (requires smoke detectors located on each side of door and connected to sprinkler system)
- WP — Exterior grade / waterproof

NOTES

1. Life safety equipment and locations shall conform to all applicable codes.
2. Fully test and inspect sprinkler system.
3. Provide smoke detectors on both sides of doors with magnetic hold opens if specified.
4. Provide pull station at each assembly door egress.
5. Provide duct smoke detectors at each 2,000 CFM supply duct.
6. Provide duct smoke detectors at each 15,000 CFM supply and exhaust duct.
7. Obtain water supply flow test if available within last three years, if not available test must be conducted.
8. All sprinkler heads must be quick response type.
9. Electrical outlets shall be provided for all plug-in equipment. All other outlets shall be located per all applicable codes.
10. Provide laminated floor plan at each public room indicating direction to building exit.

Fire Extinguisher Cabinet

FEC-1	Wall mounted Fire Extinguisher by Larsen or approved equivalent

Portable Fire Extinguishers:

1. Location of fire extinguishers and cabinets shall conform to NFPA 10 Standards for Fire Extinguisher Cabinets.
2. Portable fire extinguisher rating shall be 2-A, spacing shall not exceed a maximum of 75' and 3,000 sf.
3. Portable fire extinguisher rating in combustible cooking media exist shall be rated Class K, spacing shall not exceed a maximum travel distance of 30' - N/A

Egress - IBC (Table 1004.1.1)		
First Floor		
Business Area	1,036 sf @ 100 sf gross	10 Occupants
Storage Space	32,228 sf @ 500 sf gross	64 Occupants
Total First Floor		74 Occupants
Mezzanine		
Observation		5 Occupants
Basement		
Storage Space	17,395 sf @ 500 sf gross	35 Occupants
Total All Spaces		114 Occupants

Egress - Life Safety (Table 7.3.1.2)		
First Floor		
Business Area	1,036 sf @ 100 sf gross	10 Occupants
Storage Space	N/A per Table	64 Occupants
Total First Floor		74 Occupants
Mezzanine		
Observation		5 Occupants
Basement		
Storage Space	N/A per Table	35 Occupants
Total All Spaces		114 Occupants

CARBON MONOXIDE NOTES

1. High level of Carbon Monoxide shall trigger the building emergency exhaust system

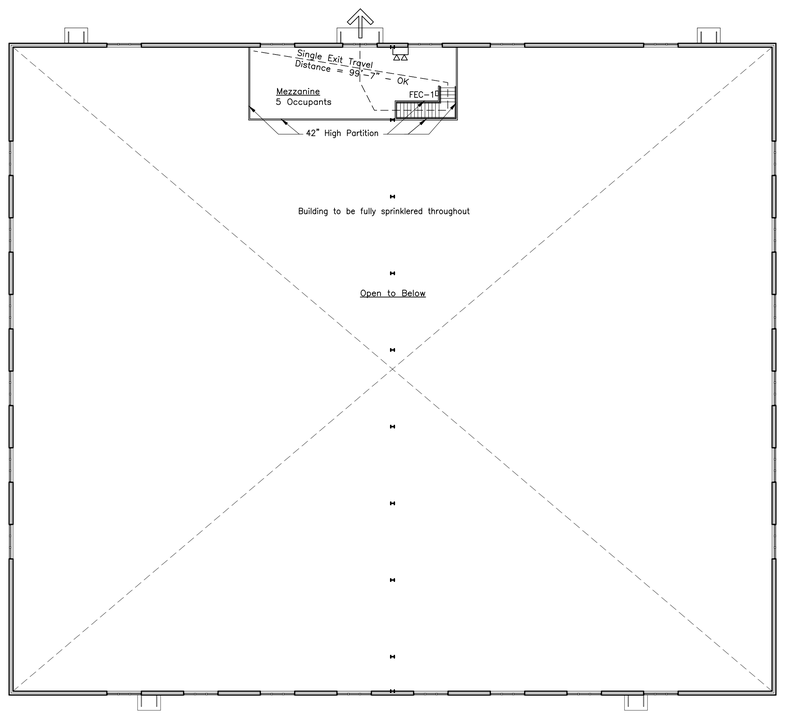

2 Mezzanine Plan

Scale: 1/16" = 1'-0"

David Matero
Architecture
100 Front Street
Suite 40
Bath, Maine 04530
207.389.4278
info@davidmatero.com

Plan N

Consultants
Walsh Engineering Associates
Civil Engineering

Revisions
-

Portland Motor Club Storage Facility

293 Presumpscot Street
Portland Maine

LICENSED ARCHITECT
DAVID S. MATERO
No. 2705
STATE OF MAINE

Job Number: 19.012
Date: 2019.08.27
Scale: 1/16" = 1' - 0"
Drawing Title:

Code Review Plans

R.2
Portland Code Review

Copyright 2019 David Matero Architecture, LLC

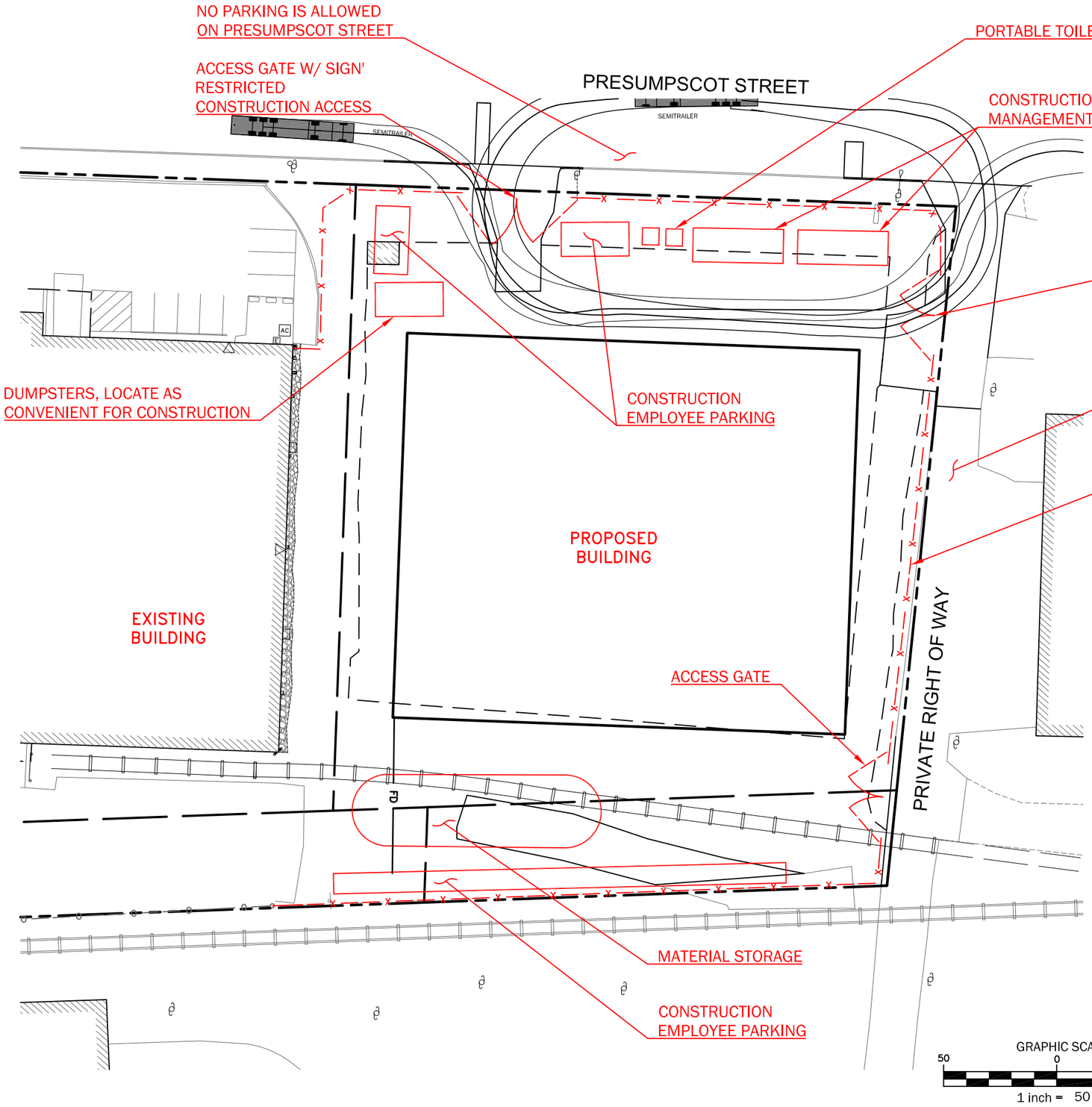

CONTRACTOR TO REVISE THE CONSTRUCTION MANAGEMENT PLAN PRIOR TO CONSTRUCTION.

NOTES:

1. PROVIDE SAFETY CONES, BARRELS, FENCING, WARNING TAPE AS REQUIRED TO RESTRICT ACCESS TO THE SITE AND PROVIDE FOR PEDESTRIAN SAFETY.
2. REMOVE EXISTING BUILDING USING THE EXISTING PARKING AREA AS STAGING AREA.
3. ALL DELIVERIES TO BE MADE ON SITE. DELIVERY VEHICLES ARE NOT TO PARK OR UNLOAD ON PRESUMPSCOT STREET.
4. THE ADJACENT PRIVATE RIGHT-OF-WAY IS TO REMAIN OPEN AT ALL TIMES FOR BUSINESS AND EMERGENCY ACCESS.
5. PROVIDE DUMPSTERS ON SITE THROUGHOUT THE CONSTRUCTION PROCESS.
6. TEMPORARY TRAILERS AND EMPLOYEES CONVENIENCE FACILITIES TO BE MAINTAINED ON SITE THROUGH THE PROJECT.
7. HOURS OF CONSTRUCTION ARE TO BE 7:00 AM TO 6:00 PM MONDAY TO SATURDAY.

Sheet Number: CM-1

Sheet Title: CONSTRUCTION MANAGEMENT PLAN

Job No.:	537
Date:	August 29, 2019
Scale:	AS SHOWN
Drawn:	JDC
Checked:	TSG

PORTLAND MOTOR CLUB
293 PRESUMPSCOT STREET
PORTLAND, MAINE

WALSH
ENGINEERING ASSOCIATES, INC.
One Karen Dr., Suite 2A | Westbrook, Maine 04092
ph: 207.553.9898 | www.walsh-eng.com

Copyright © 2019

P:\537 - 293 Presumpscot Street\3. CAD\537 - BASE.dwg plot date: 9/4/2019 2:41 PM

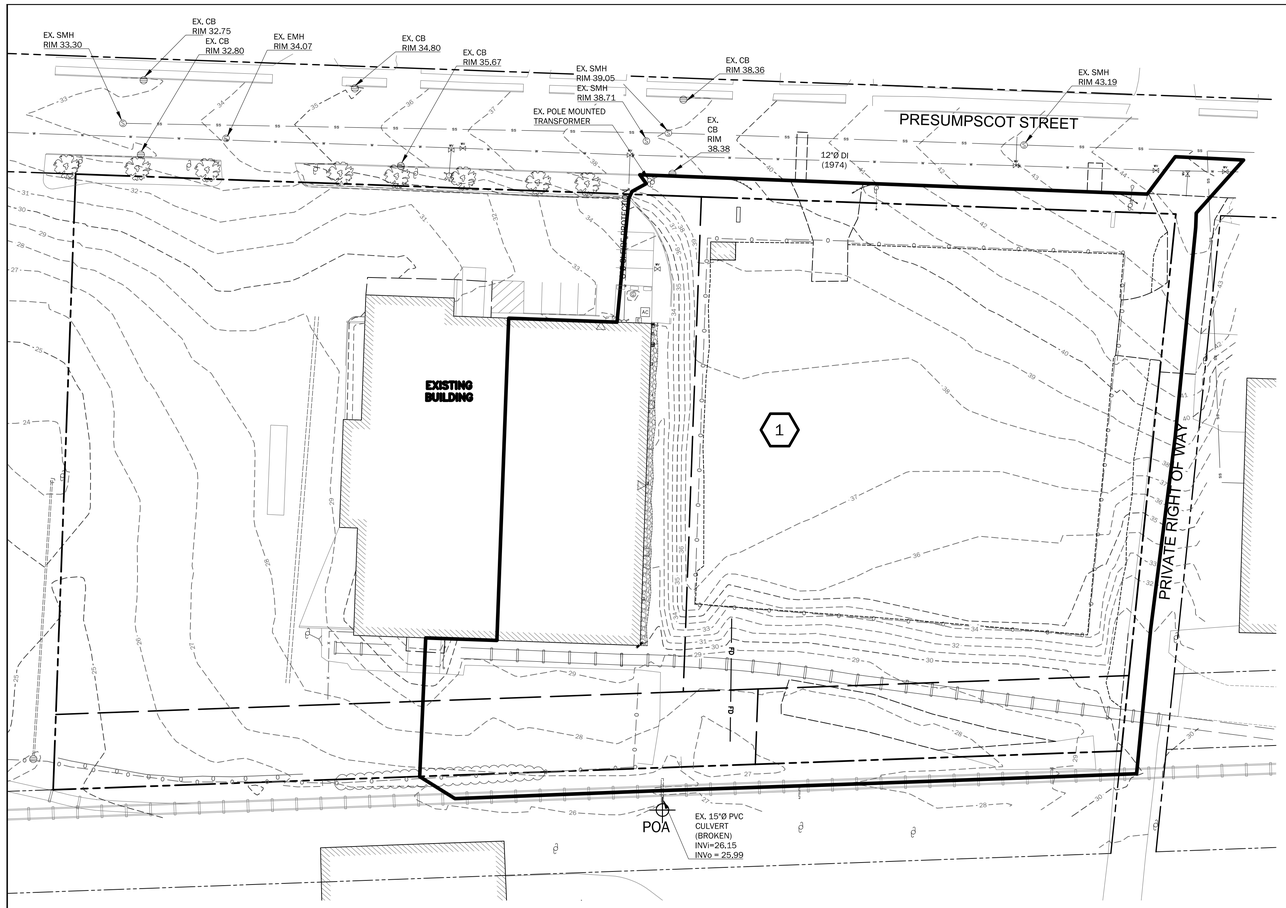

DRAINAGE ANALYSIS - EXISTING CONDITIONS

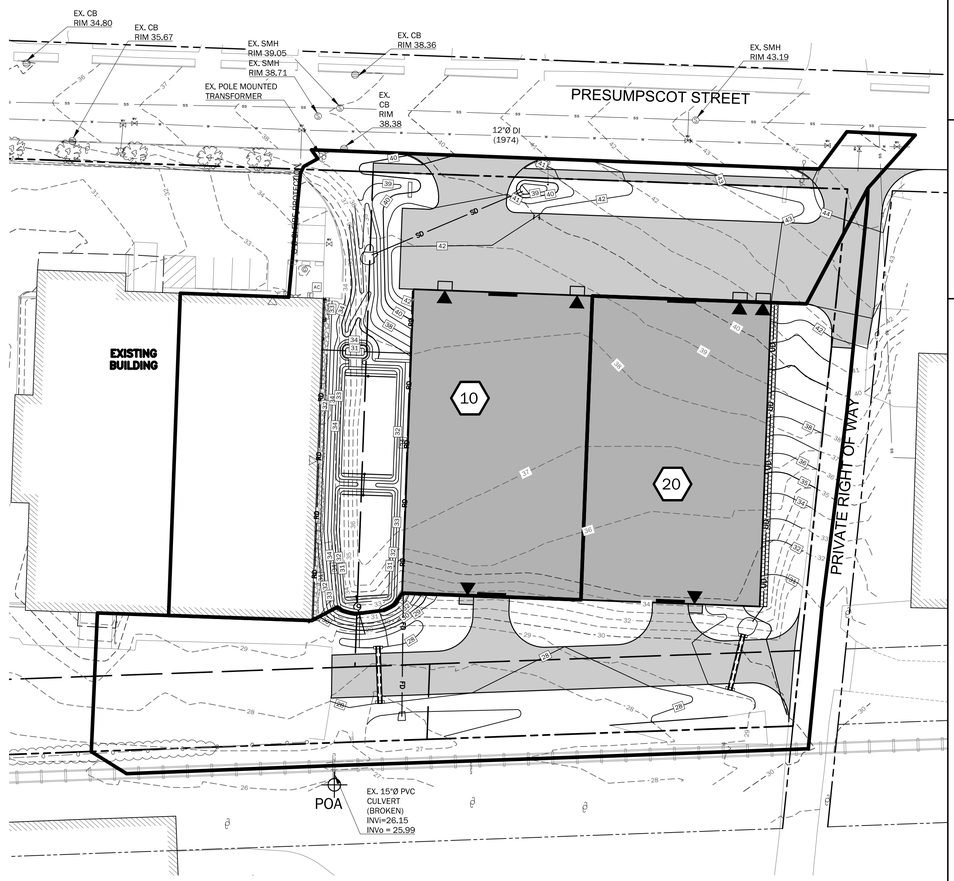

DRAINAGE ANALYSIS - DEVELOPED CONDITIONS

DRAINAGE LEGEND

- SUBCATCHMENT BOUNDARY
- 1 — SUBCATCHMENT DESIGNATION
- POA — ANALYSIS POINT

GRAPHIC SCALE

40 0 20 40 80 160

1 inch = 40 ft.

WALSH
ENGINEERING ASSOCIATES, INC.
One Karen Dr., Suite 2A | Westbrook, Maine 04092
ph: 207.553.9898 | www.walsh-eng.com

Copyright © 2018

STATE OF MAINE
THOMAS S. GREER
No. 4206
LICENSED PROFESSIONAL ENGINEER
8/29/19

PORTLAND MOTOR CLUB
293 PRESUMPSCOT STREET
PORTLAND, MAINE

WALDRON REALTY, LLC
178 U.S. ROUTE ONE
FALMOUTH, MAINE

Rev.	Date	Description	Drawn	Check

Sheet Title:
DRAINAGE ANALYSIS PLANS

Job No.:	537
Date:	AUG. 29, 2019
Scale:	AS SHOWN
Drawn:	JDC
Checked:	TSG

Sheet No.: D1.1

P:\537 - 293 Presumpscot Street\ CADD\ - Add\Dwg set date 8/30/2019 3:16 PM

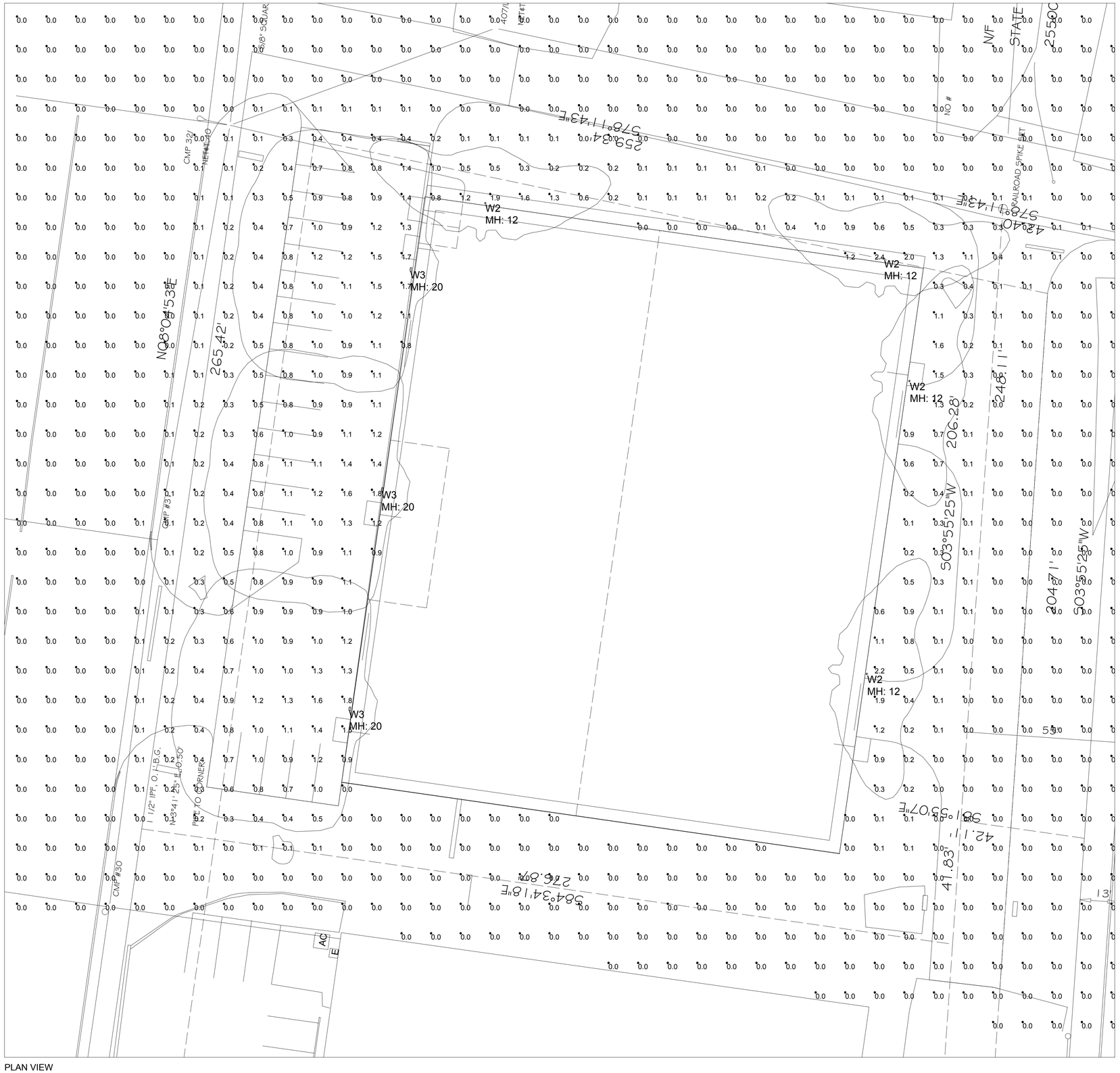

PLAN VIEW

NOTES:
1) EXACT MOUNTING DETAILS TO BE DETERMINED AT JOBSITE BY OTHERS.
2) CALCULATIONS MAY or MAY NOT SHOW THE EFFECT OF SHADOWING CAUSED BY BUILDINGS AND OBJECTS WITHIN THE CALCULATED SPACE OR IN THE SITE AREA.
3) READINGS SHOWN ARE INITIAL HORIZONTAL FOOTCANDLES ON A FLAT SITE WITHOUT REFLECTIONS OR OBSTRUCTIONS UNLESS OTHERWISE INDICATED.
4) THIS CALCULATION IS BASED ON LIMITED INFORMATION SUPPLIED BY OTHERS TO SWANEY LIGHTING ASSOCIATES AND STANDARD ASSUMPTIONS OF THE SPACE AND/OR SITE.
5) CONFORMANCE TO CODES AND OTHER LOCAL REQUIREMENTS AS DETERMINED BY THE AHJ ARE THE RESPONSIBILITY OF THE OWNER AND/OR THE OWNER'S REPRESENTATIVE.
6) THIS LAYOUT DRAWING MUST BE COORDINATED WITH THE SITE LOCATION FOR CORRECT FIXTURE ORIENTATION.
7) DOCUMENTS PRINTED OR PLOTTED FROM ELECTRONIC FILES MAY APPEAR AT OTHER THAN THE DESIRED OR ASSUMED GRAPHIC SCALES. IT IS THE RESPONSIBILITY OF THE RECIPIENT TO VERIFY THAT THE PRINTED OR PLOTTED-TO-SCALE DRAWING IS PRINTED TO SCALE.

Calculation Summary					
Label	**Avg**	**Max**	**Min**	**Avg/Min**	**Max/Min**
SITE	0.17	2.4	0.0	N.A.	N.A.
PARKING	1.04	1.8	0.4	2.6	4.5

Luminaire Schedule (note fixture cataloge numbers are not complete)

Type	Qty	Lum. Lumens	LLF	Lum. Watts	Description
W2	4	2077	0.900	19.9	TRP1-12L20-3K7-2
W3	3	5100	0.900	48.6	TRP2-24L-50-3K7-4

Site Lighting Plan

A1.5

TITLE
PORTLAND MOTOR CLUB
PORTLAND, ME
SITE LIGHTING LAYOUT

site 8-29-19.AGI

GENERATED BY SWANEY LIGHTING, SCARBOROUGH ME - 207-883-7100 - swaneylighting.com

Date:8/29/2019

GENERATED FOR:
GREG DAY LIGHTING
DAVID MATERO

SCALE NOT TO SCALE

Page 1 of 1

SWANEY LIGHTING ASSOCIATES, INC.

NOTICE: THIS DRAWING IS THE EXCLUSIVE PROPERTY OF SWANEY LIGHTING ASSOCIATES. ITS ACCEPTANCE CONSTITUTES AN AGREEMENT THAT THE DRAWING WILL BE TREATED AS CONFIDENTIAL. THIS DRAWING IS TO BE USED FOR NO PURPOSE OTHER THAN AS DETAILED IN WRITING BY SWANEY LIGHTING ASSOCIATES. THIS DRAWING IS TO BE RETURNED UPON REQUEST AND IS NOT TO BE COMMUNICATED, DISCLOSED OR COPIED; EXCEPT AS EXPRESSLY AUTHORIZED IN WRITING BY SWANEY LIGHTING ASSOCIATES. THIS DRAWING IS NOT TO BE USED FOR CONSTRUCTION PURPOSES UNLESS SPECIFICALLY STATED. IT IS THE INTENT OF THIS LIGHTING LAYOUT TO SUGGEST THE BEST UTILIZATION OF LIGHTING FIXTURES INCLUDED IN THIS DRAWING. IT IS PROVIDED USING FIXTURE PHOTOMETRICS SUBMITTED BY THE MANUFACTURER. ANY VARIATION IN FIXTURE PERFORMANCE FROM THE PERFORMANCE SHOWN IN IES FILE IS NOT THE RESPONSIBILITY OF THE MANUFACTURER. IT'S USE FOR ANY OTHER PURPOSE IS NOT AUTHORIZED BY SWANEY LIGHTING ASSOCIATES.

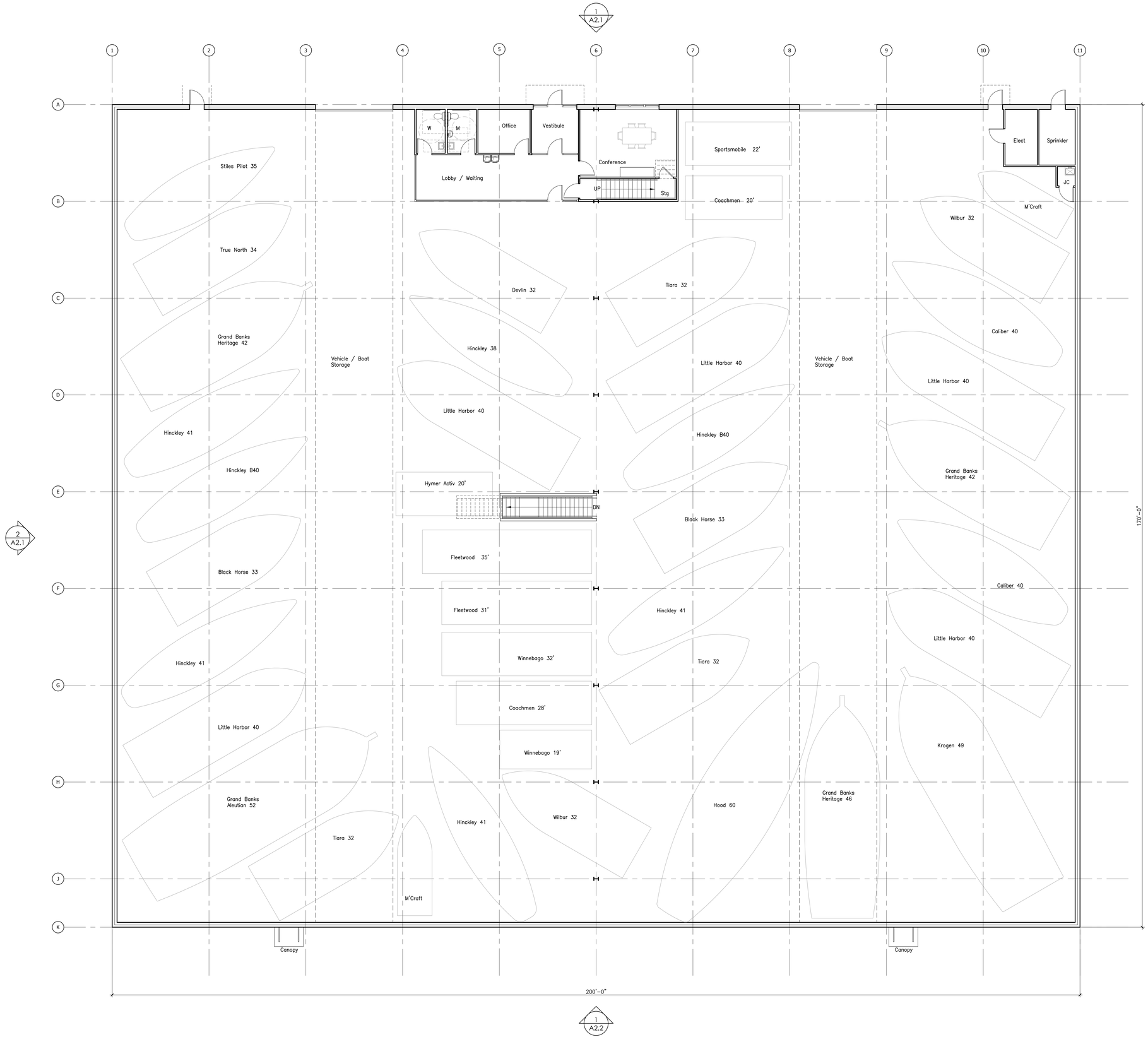

1 First Floor Plan

Scale: 1/8" = 1 '- 0"

David Matero
Architecture

100 Front Street
Suite 40
Bath, Maine 04530
207.389.4278
info@davidmatero.com

Plan N

Consultants
Walsh Engineering Associates
Civil Engineering

Revisions
-

Portland Motor Club Storage Facility

293 Presumpscot Street
Portland Maine

REGISTERED ARCHITECT
DAVID S. MATERO
No. 2705
STATE OF MAINE

Job Number: 19.012
Date: 2019.08.27
Scale: 1/8" = 1 '- 0"

Drawing Title:

First Floor Plan

A1.1

Portland Code Review

Copyright 2019 David Matero Architecture, LLC

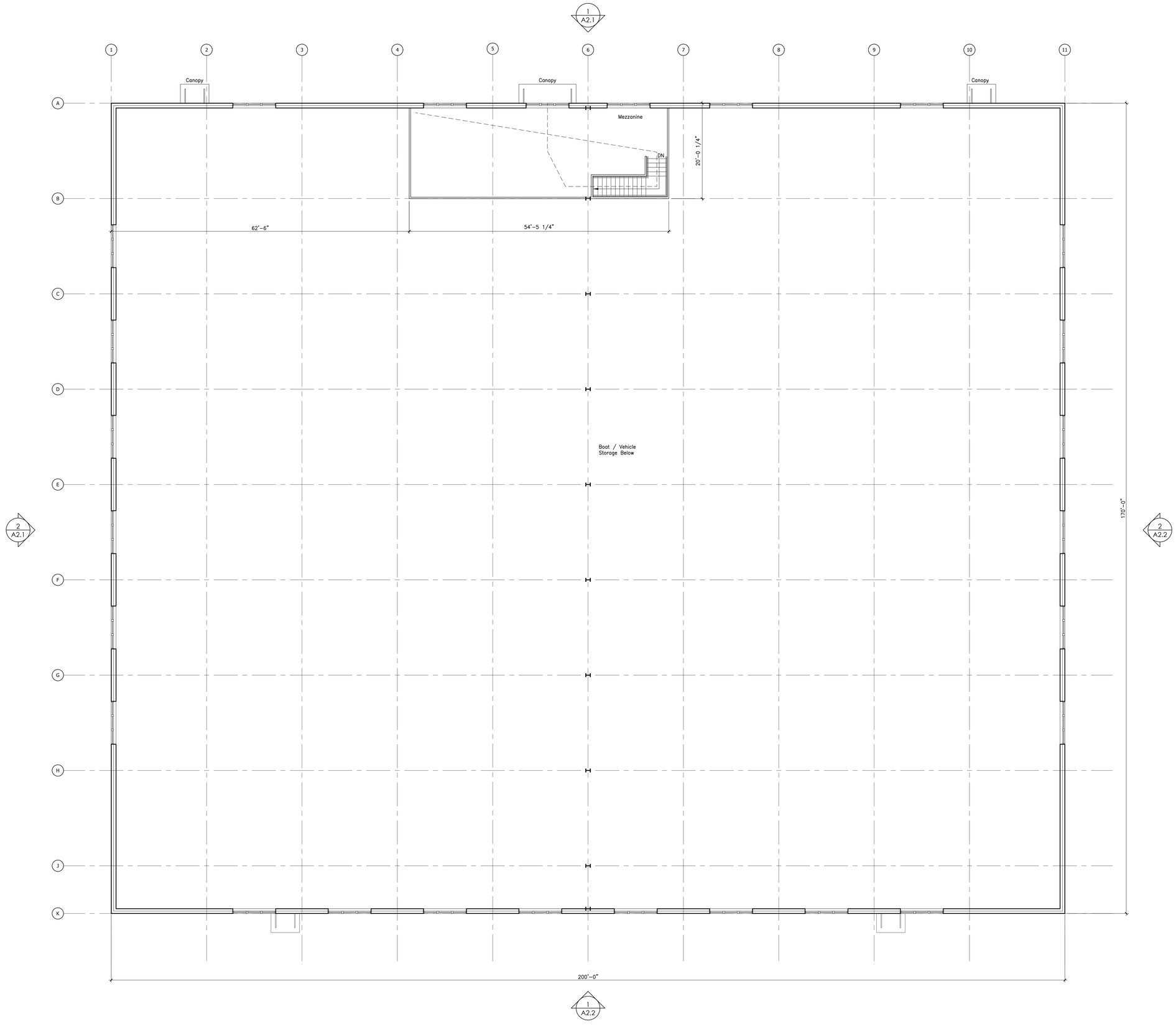

2 Mezzanine Floor Plan

Scale: 1/8" = 1 '- 0"

David Matero
Architecture

100 Front Street
Suite 40
Bath, Maine 04530
207.389.4278
info@davidmatero.com

Plan N

Consultants
Walsh Engineering Associates
Civil Engineering

Revisions
.

Portland Motor Club Storage Facility

293 Presumpscot Street
Portland Maine

LICENSED ARCHITECT
DAVID S. MATERO
No. 2705
STATE OF MAINE

Job Number: 19.012
Date: 2019.08.27
Scale: 1/8" = 1 '- 0"

Drawing Title:

Second Floor Plan

A1.2

Portland Code Review

Copyright 2019 David Matero

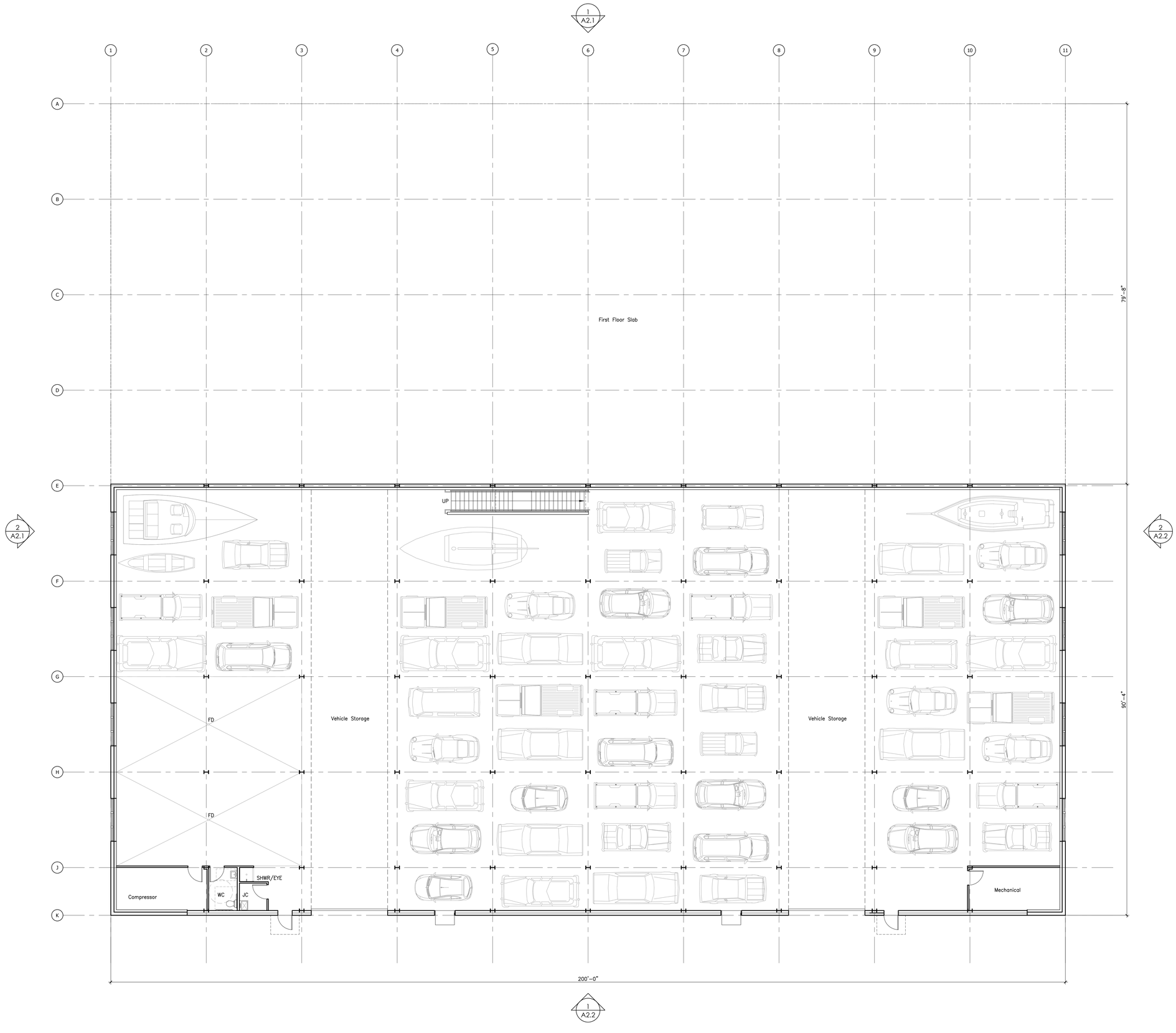

3 Basement Plan

Scale: 1/8" = 1 '- 0"

David Matero
Architecture

100 Front Street
Suite 40
Bath, Maine 04530
207.389.4278
info@davidmatero.com

Plan N

Consultants

Walsh Engineering Associates
Civil Engineering

Revisions

.

Portland Motor Club Storage Facility

293 Presumpscot Street
Portland Maine

LICENSED ARCHITECT
DAVID S. MATERO
No. 2705
STATE OF MAINE

Job Number: 19.012
Date: 2019.08.27
Scale: 1/8" = 1 '- 0"

Drawing Title:

Basement Plan

A1.3

Portland Code Review

Copyright 2019 David Matero Architecture, LLC

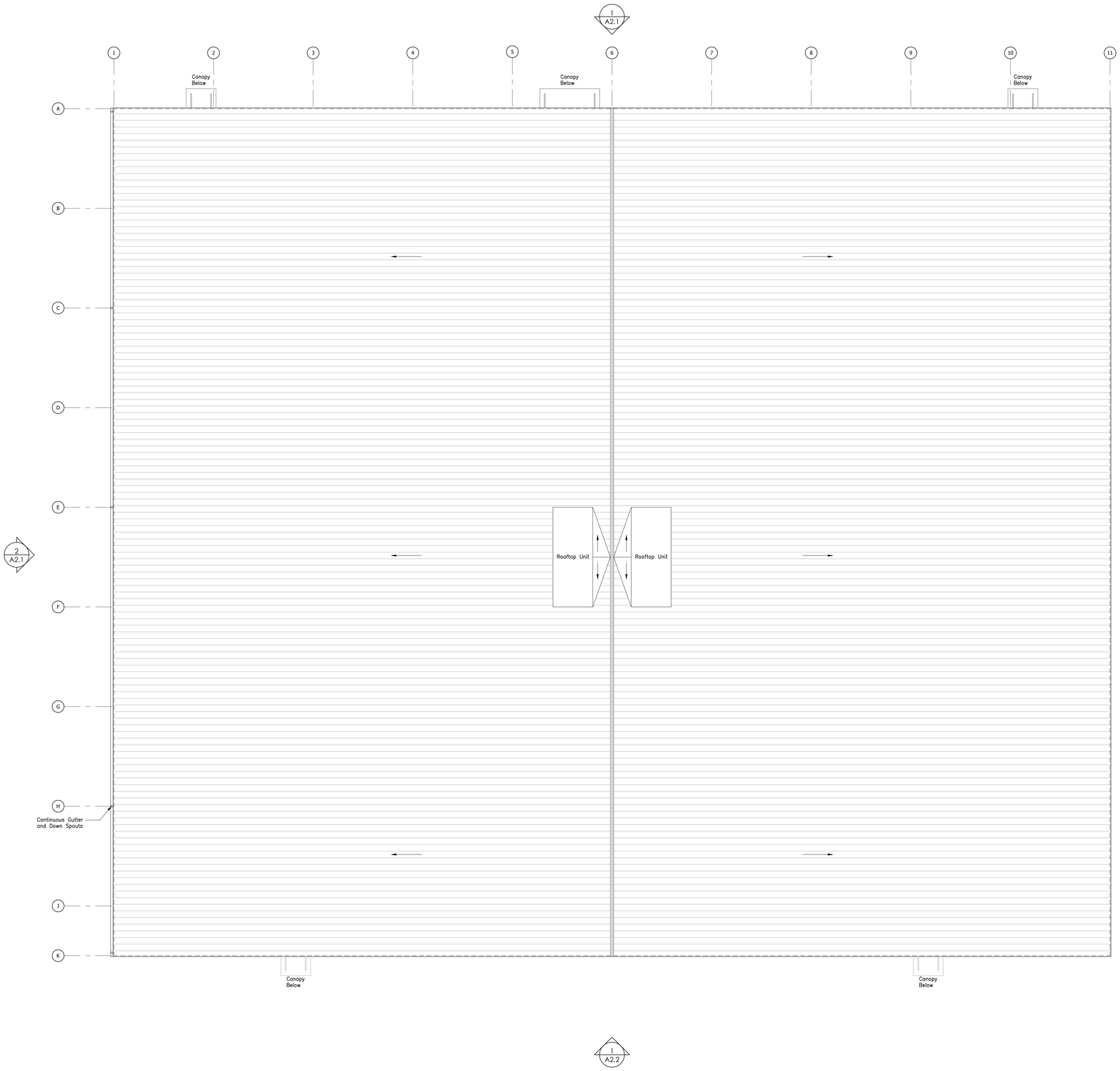

4 Roof Plan

Scale: 1/8" = 1 '- 0"

David Matero
Architecture

100 Front Street
Suite 40
Bath, Maine 04530
207.389.4278
info@davidmatero.com

Plan N

Consultants
Walsh Engineering Associates
Civil Engineering

Revisions
.

Portland Motor Club Storage Facility

293 Presumpscot Street
Portland Maine

REGISTERED ARCHITECT
DAVID S. MATERO
No. 2705
STATE OF MAINE

Job Number: 19.012
Date: 2019.08.27
Scale: 1/8" = 1 '- 0"

Drawing Title:

Roof Plan

A1.4

Portland Code Review

Copyright 2019 David Matero

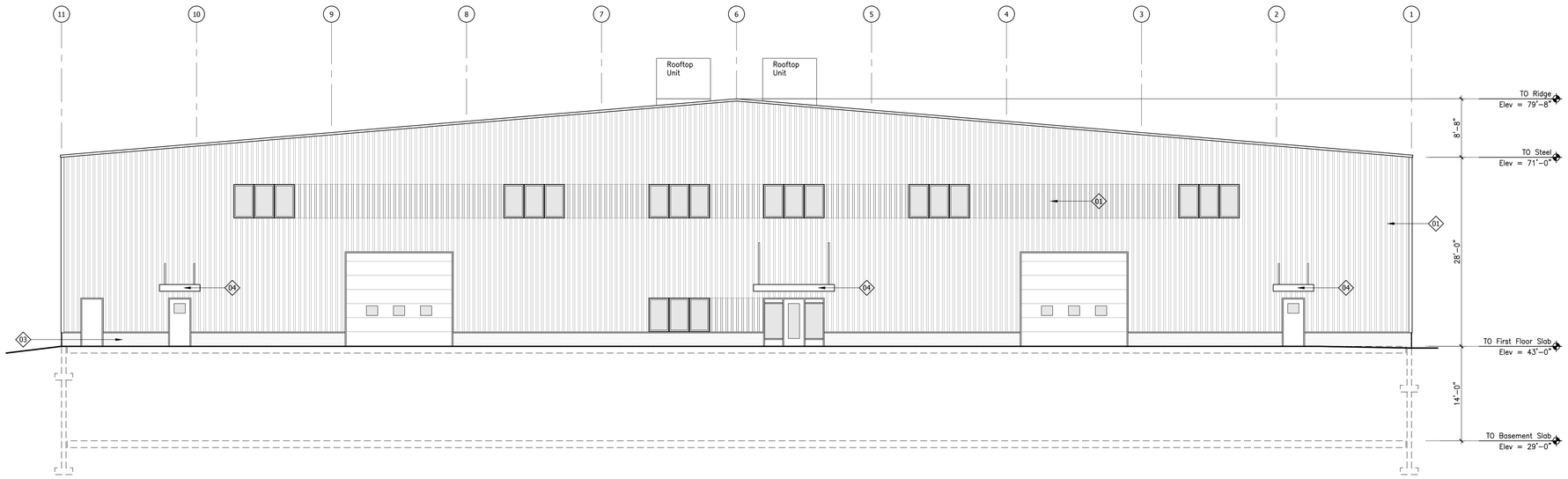

1 East Exterior Elevation

Scale: 1/8" = 1 '- 0"

Elevation Legend

01. Metal Siding System
02. Metal Roof System
03. Exposed Concrete Foundation
04. Canopy with Cable supports
05. Louver
06. Gutter & Down Spouts

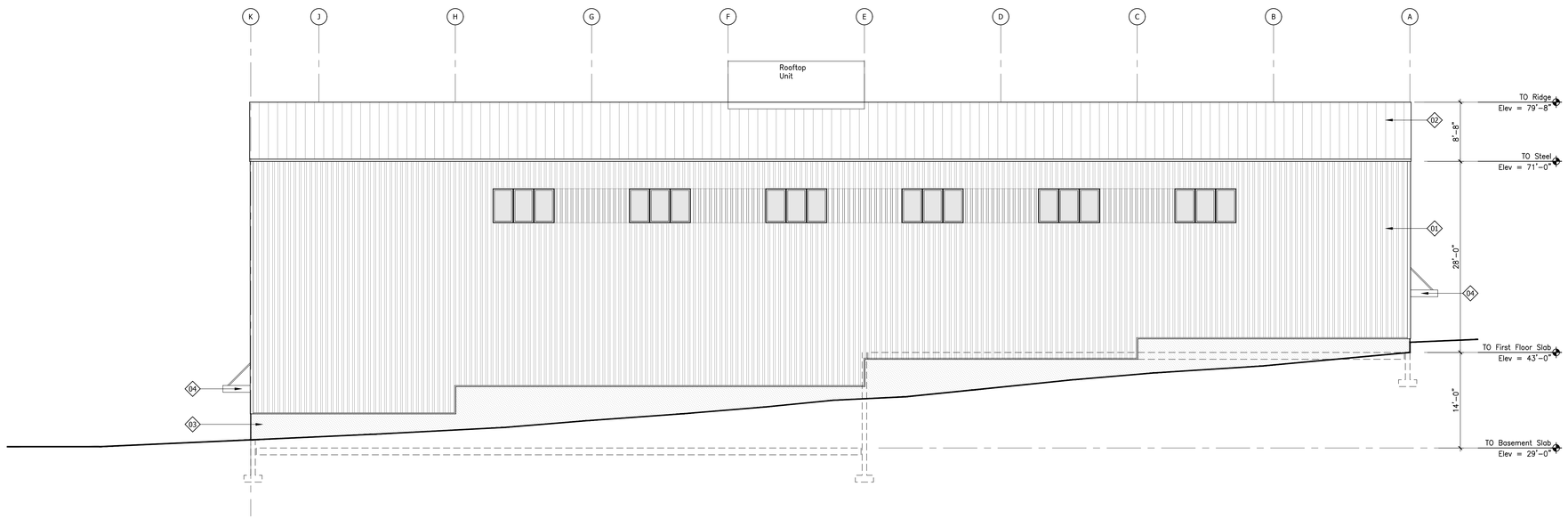

2 North Exterior Elevation

Scale: 1/8" = 1 '- 0"

David Matero
Architecture

100 Front Street
Suite 40
Bath, Maine 04530
207.389.4278
info@davidmatero.com

Consultants
Walsh Engineering Associates
Civil Engineering

Revisions
.

Portland Motor Club Storage Facility

293 Presumpscot Street
Portland Maine

Job Number: 19.012
Date: 2019.08.27
Scale: 1/8" = 1 '- 0"

Drawing Title:

East & North Exterior Elevations

A2.1

Portland Code Review

Copyright 2019 David Matero Architecture, LLC

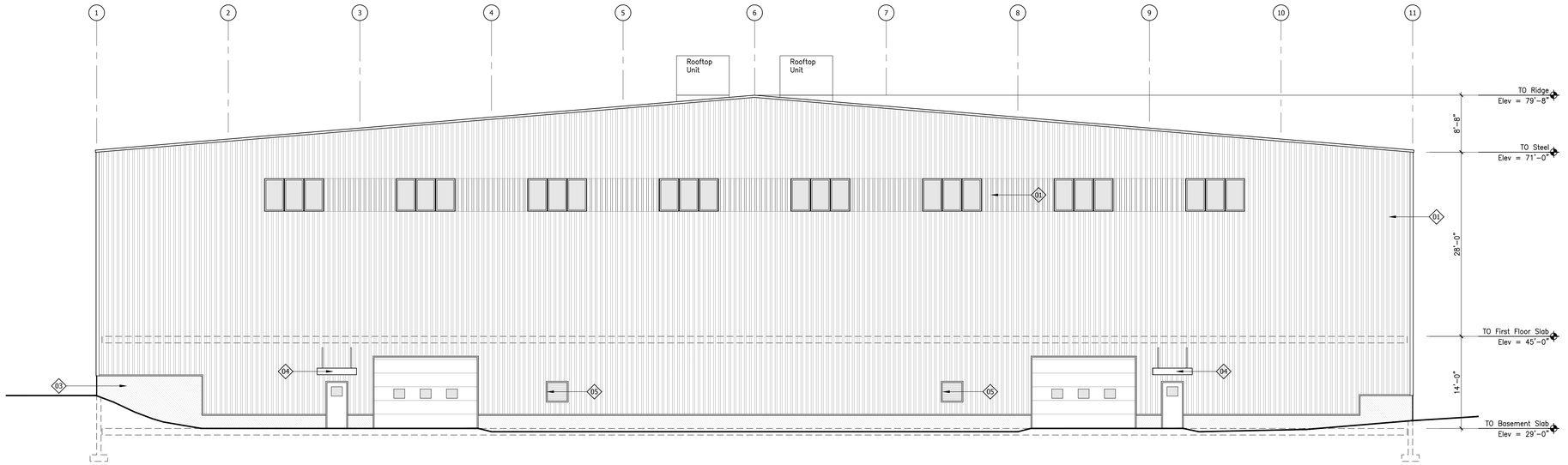

3 West Exterior Elevation

Scale: 1/8" = 1 '- 0"

Elevation Legend

01. Metal Siding System
02. Metal Roof System
03. Exposed Concrete Foundation
04. Canopy with Cable supports
05. Louver
06. Gutter & Down Spouts

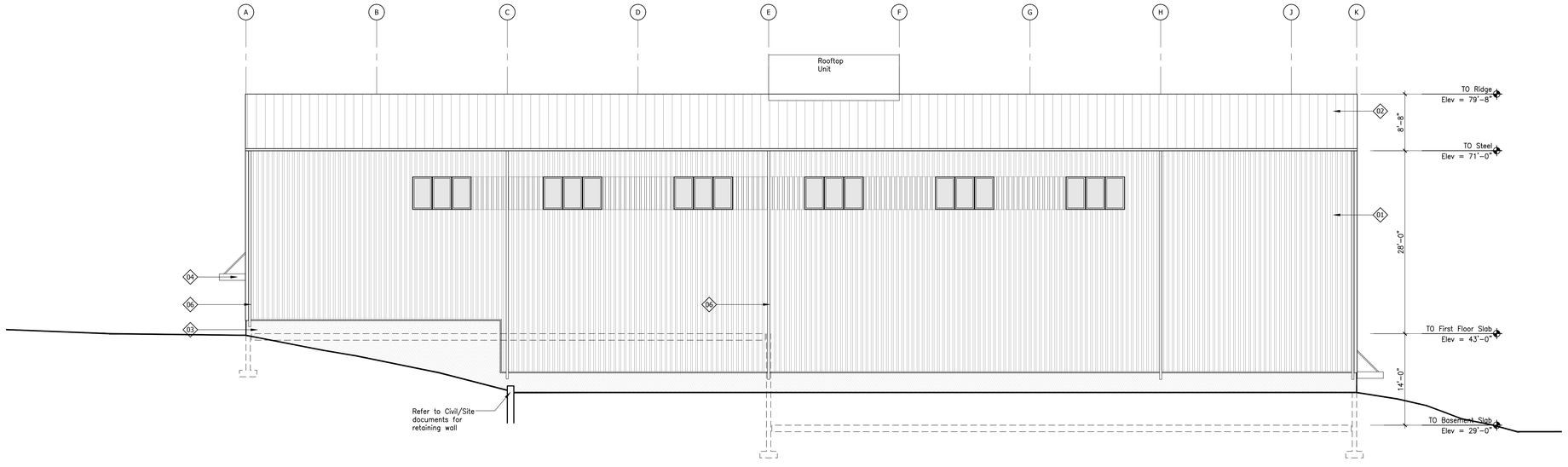

4 South Exterior Elevation

Scale: 1/8" = 1 '- 0"

David Matero
Architecture

100 Front Street
Suite 40
Bath, Maine 04530
207.389.4278
info@davidmatero.com

Consultants
Walsh Engineering Associates
Civil Engineering

Revisions
.

Portland Motor Club Storage Facility

293 Presumpscot Street
Portland Maine

Job Number: 19.012
Date: 2019.08.27
Scale: 1/8" = 1 '- 0"

Drawing Title:

West & South Exterior Elevations

A2.2

Portland Code Review

Copyright 2019 David Matero Architecture, LLC

PLANNING BOARD REPORT
PORTLAND, MAINE

Convenience Store and Retail Buildings
1884 Forest Avenue
Level III Site Plan
PL-000314-2018
John Chau, Applicant

Submitted to: Portland Planning Board Public Hearing Date: December 10, 2019	Prepared by: Shukria Wiar, Planner Date: December 6, 2019

I. INTRODUCTION

Jim Seymour of Sebago Technics, on behalf of John Chau, seeks to develop the lot at 1884 Forest Avenue into two buildings that will consist of a convenience store with eight fueling stations and a multi-tenant retail space. The area of the vacant parcel is 72,350 SF square feet (1.61 acres). The site was rezoned from R5 Residential to B2 Community Business in March 2009 to permit commercial development of the site. The applicant has submitted a final site plan for the Planning Board's consideration. This proposal is a Level III Site Plan and a conditional use review that requires Board review.



Figure 1: Site of Proposed Development

The proposal is subject to the Site Plan Ordinance standard, B-2 Design Standards, and the Conditional Use Standards for the auto service station. The project will also require a Traffic Movement Permit, which has been be reviewed by the City under their delegated review authority. A Planning Board workshop for this application was held on May 24, 2019. At this workshop, the Planning Board requested that the applicant provide a safe, internal pedestrian walkway within the site, provide an open gate between Portland Housing Authority (PHA) and the project site for pedestrians, and provide more information on offsite improvements on Forest Avenue.

Applicant Name	John Chau
Consultants	
Engineer	Jim Seymour, Sebago Technics
Architect	Ryan Senatore, Senatore Architecture
Surveyor	Matthew W. EK, Sebago Technics

II. PROJECT DATA

Waiver Requests	*Applicable Standards*
Number of driveways to a Site: The applicant proposes three driveways to the site. Two one-ways from Forest Ave and one two-way from Riverton Drive.	Technical Standard, Section 1.7.2.8, Number of Driveways, that states no more than two driveways shall be permitted for ingress and

	egress.
Flooding Standard: The applicant proposes to increase of 0.01 cf of stormwater flow into the combine sanitary sewer line in Riverton Drive.	Technical Standard, Section 5: As outlined in the Section 14-526 of the City of Portland Code of Ordinances, the developments specified below shall comply with the Urban Impaired Stream, Basic, General, and Flooding Standards of the most recent version of the Maine Department of Environmental Protection (Maine DEP) Chapter 500 Rules for Stormwater Management

Review	*Applicable Standards*
Site Plan	*Section 14-526*
Conditional Use Standards	Sec. 14-183. Conditional uses
Design Review	B-2 Design Standards
Traffic Movement Permit	Technical Standard 1 1.1. Traffic Studies

III. PROJECT DATA

Existing Zoning	B-2 Community Business
Existing Use	Vacant Site
Proposed Use	Auto Service Station and Retail
Parcel Size	72,350 SF (1.61) acres

	Existing	*Proposed*	*Net Change*
Impervious Area	443 SF	48,703 SF	SF
Building Footprint	0 SF	12,800 SF	+12,800 SF
Building Floor Area	0 SF	12,800 SF	+12,800 SF
Parking Spaces – Provided	0	48 of 4 are handicapped	+48
Parking Spaces – Required	54*		
Bicycle Parking Spaces - Provided	0	12	+12
Bicycle Parking Spaces - Required	11		
Estimated Cost of Project	$2,120,124		
* Both of the proposed uses are retail. The total retail area is 12,800 SF. Section 14-332(h) exempts the first 2,000 SF of retail space. Therefore, 10,800 SF was used as the baseline, the total parking spaces need is 54 (at one space per 200 sf of retail space). It could also be interpreted that if the development consists of smaller individual retail units, the parking could be calculated for each unit separately (so a unit less than 2,000 sf would not require any spaces). If the latter approach is taken, the individual retail spaces (1,302) would be exempt and only parking for the convenience store required, which would be 15 spaces.			

IV. EXISTING CONDITIONS

This parcel is currently undeveloped and is vegetated with mixed pine woods and high grass/brush field. The parcel abuts the Presumpscot Grange Hall to the south, which was converted to a karate studio. Riverton Park is a 150 residential unit development owned by the Portland Housing Authority to the west (rear) and Wellesley Estates is a 46 unit Planned Unit Residential Development (PRUD) to the southwest (rear). In addition to these properties, development in the immediate vicinity includes a 7-11 convenience store and gas station at the Riverside and Forest Avenue intersection; single and multi-family residential units (including Terrace Pond Apartments, a 21 unit multi-family residential development); an auto repair shop; a Family Dollar store; SCA Services Waste Management; Tortilla Flats Mexican restaurant; a Hannaford's supermarket; a plumbing and heating repair business; a landscaping contractor; and the Friends Quaker Meeting House. There was a zoning map amendment in March 2009 to change the zoning from R-5 Residential to B-2 Community Business to permit commercial development on the site. Presumpscot Grange Hall was included in the zoning map amendment.

IV. PROPOSED DEVELOPMENT

The applicant is proposing to develop the parcel with two buildings. The primary structure has a total ground floor area of 5,000 square foot that includes a convenience store with eight fueling pumps. The second structure is a 7,800 square foot multi-tenant retail space. The site plans show a proposed ingress/ egress driveway that measures twenty-four (24) feet in width from Riverton Drive, one entry-only driveway of eighteen (18) feet, and an exit-only driveway of eighteen (18) feet. Both the latter driveways are located off of Forest Avenue. Vehicular access is proposed at each building. The building entrances for both structures are oriented internally. The retail building does have entrances along Forest Ave but it is not clear if these entrances will be used as the primary entrances. The convenience store is without a direct connection to Forest Avenue.

Figure 2: Proposed Development

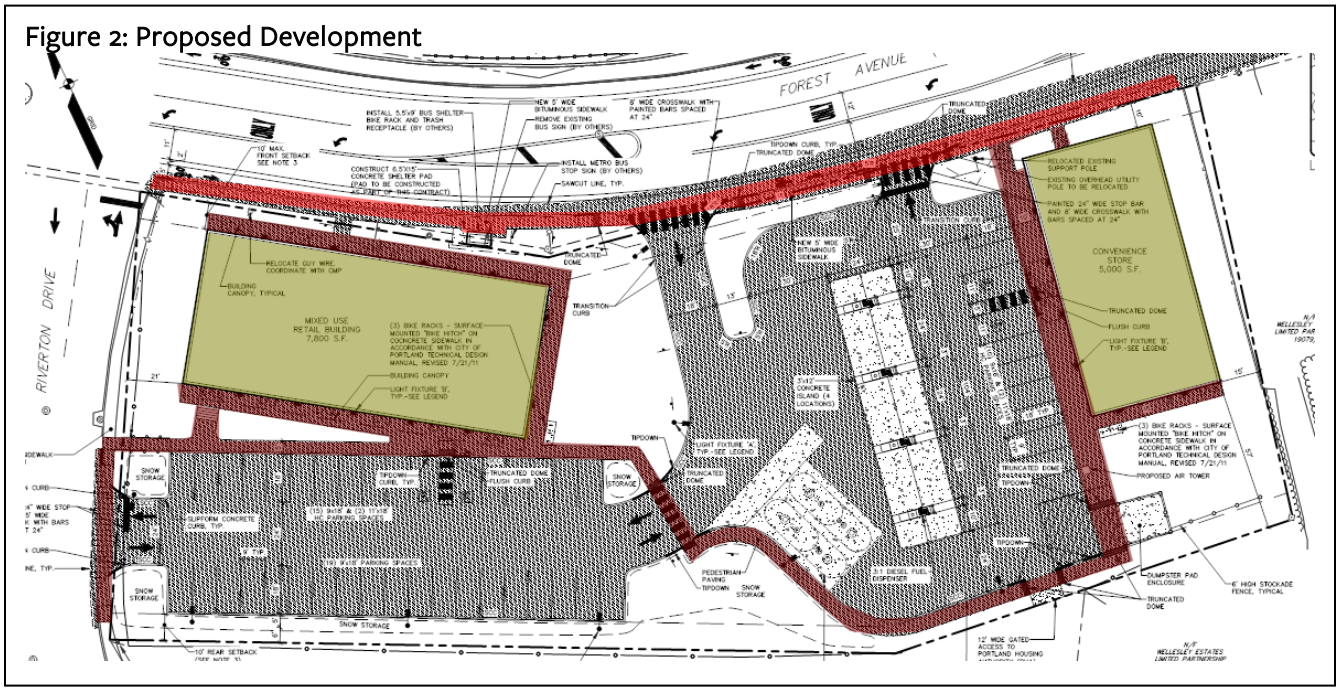

PUBLIC COMMENT

The Portland Housing Authority had submitted comments in regard to the project. Currently there is an access through way in the rear of the property from Riverton Park onto this site; Portland Housing Authority would like to maintain this access as the pedestrian access, which the applicant is willing to do. The survey plan does not show an access easement to Riverton Park.

A Neighborhood Meeting was held on January 3rd, 2019 at Riverton Elementary School. There were six (6) abutters that attended the meeting with no concerns about the development. The attendance list and minutes of the meeting is included as Attachment B.

VI. RIGHT, TITLE AND INTEREST AND FINANCIAL/TECHNICAL CAPACITY

The owners of the property are John Chau and Phoung Neang. The applicant has provided a copy of a warranty deed, recorded at the Cumberland County Registry of Deeds (Book 26148 Page 266), which demonstrates their right, title and interest in the property. The estimated cost of the development is $2,120,124. The applicant has submitted a letter from Camden National Bank, dated November 13, 2018, as a demonstration of their financial capacity to complete the proposed development.

VII. ZONING ASSESSMENT

The proposed project is located in the B-2 Community Business Zone and an auto service station is a conditional use. The project is meeting the zoning requirements of the B-2 zone pending Planning Board approval for the conditional use. Parking, impervious surface, and setbacks are being met. It should also be noted that any HVAC

equipment or other sound producing equipment will need to meet the B-2 zone maximum noise requirements.

The applicant will need to meet the conditional use criteria of the zoning ordinance. Since this project is for an auto service station, Section 14-183 (a) applies to this project:

> Notwithstanding section 14- 474(a)of this article or any other provision of this code, the Planning Board shall be substituted for the Board of Appeals as the reviewing authority and shall apply the following standards in addition to the provisions of section 14-474:
>
> 1. Signs: Signs shall not adversely affect visibility at intersections or access drives. Such signs shall be constructed, installed and maintained so as to ensure the safety of the public. Such signs shall advertise only services or goods available on the premises.
>
> Staff Review: A signage and wayfinding plan has been submitted for review. It appears that the signs are not adversely effecting visibility at interactions or access drives. Staff reviewing is pending.
>
> 2. Circulation: No ingress and egress driveways shall be located within thirty (30) feet from an intersection. No entrance or exit for vehicles shall be in such proximity to a playground, school, church, other places of public assembly, or any residential zone that the nearness poses a threat or potential danger to the safety of the public.
>
> Staff Review: The three proposed driveways are not located within thirty (30) feet from an intersection. The site is not in close proximity of a playground, school, church, other places of public assembly.
>
> 3. Conditions specific to major or minor auto service stations, car washes and automobile dealerships:
>
> a. A landscaped buffer, no less than 5 feet wide, shall be located along street frontages (excluding driveways). The buffer shall consist of a variety of plantings in accordance with the City of Portland Technical Manual
>
> Staff Review: The proposed landscaping plan does not show a landscaped buffer along the street frontage. Jeff Tarling, City Arborist, has reviewed and recommended that street trees, as as well landscaped buffer, be proposed. Refer to Paragraph VIII.B.2. Environmental Quality Standards for Mr. Tarling's full recommendations.

VIII. DEVELOPMENT REVIEW

A. SITE PLAN SUBMISSION REQUIREMENTS (Section 14-527)

The applicant has submitted the material required for a final plan and staff reviewed the final set of site plans and finds them acceptable with conditions of approval.

B. SITE PLAN STANDARDS (Section 14-526)

The proposed development has been reviewed by staff for conformance with the relevant review standards of Portland's site plan ordinance and applicable regulations. Staff comments are listed below.

1. Transportation Standards

Tom Errico, Consultant Traffic Engineer with TY Lin, has reviewed the project and submitted information from the applicant and finds the plans acceptable, see Attachment 1.

a. Traffic Movement Permit

The proposed development will generate over 200 net new peak hour trips in the morning peak hour and the afternoon peak hour and thus a Maine DOT Traffic Movement Permit (TMP) is required due to the significant amount of traffic to be generated during the weekday peaks hours. The TMP scoping meeting was held on January 2nd, 2019. As part of the Traffic Movement Permit, the applicant was required to prepare a traffic impact study that assesses the project's impact at the driveways and at the Forest Avenue intersections with Riverside Street and Riverside Industrial Parkway. Mr. Errico has reviewed this traffic impact study and has the following recommendations:

- A detailed evaluation (with mitigation strategies) of the High Crash Locations at Forest/Riverside and the Forest Avenue segment is required.
  Final Status: The applicant has conducted an acceptable safety analysis and identified mitigation improvements on Forest Avenue. The applicant shall be responsible for all cost associated with implementation of improvements as detailed on the Concept Off-Site Improvement Plan prepared by Sebago Technics dated October 15, 2019. Final design plans shall be provided to the City for review and approval.

- The Applicant shall evaluate the need for a left-turn lane on Forest Avenue. The site frontage shall reflect either a condition with a left-turn lane or, if not warranted, without. The current site plan is not acceptable given that it does not depict a left-turn lane and includes a westerly curb alignment with widening for a three-lane section on Forest Avenue.
  Final Status: The City concurs with the applicants request for provision of a left-turn lane on Forest Avenue for improved safety and mobility. The left-turn lane layout is detailed on the Concept Off-Site Improvement Plan prepared by Sebago Technics dated September 11, 2019 and the most current site plan. The applicant shall be responsible for all cost associated with implementation. Final design plans shall be provided to the City for review and approval.

- The study suggests improvements at the Forest Avenue/Riverside Street intersection. I continue to review the analysis and will provide comments in the future.
  Final Status: The applicant has identified improvements at the Forest Avenue/Riverside Street intersection as detailed on the Concept Off-Site Improvement Plan prepared by Sebago Technics dated October 15, 2019. The applicant shall be responsible for all cost associated with implementation. Final design plans shall be provided to the City for review and approval.

The above items listed in Mr. Errico's memo are included as a potential condition of approval and will need to be addressed prior to the issuance of the building permit.

b. Number of Driveways and Circulation

The development is currently proposed to have three driveways. This includes one full access drive on Riverton Drive, an entrance only-drive on Forest Avenue and a right-turn only exit drive on Forest Avenue. Per Technical Standard, Section 1.7.2.8, Number of Driveways, no more than two driveways shall be permitted for ingress and egress. The applicant requests a waiver of this standard to allow three driveways. MikeTremblay, Senior Engineer with Department of Public Works, reviewed the project and offers the following are some of his recommendation, please refer to Attachment 2 for review comments:

- *The entrance driveway from Forest Avenue has a large southerly radius, which is not necessary as*

vehicles should not be exiting and turning right from this driveway. This radius should be reduced to five feet, or the minimum required to accommodate left- turning trucks, whichever is larger.

- *ADA panels are not required at any site driveway or internal to the site. These are not required at unsignalized driveways or within developments. If the Applicant chooses to include them, they should be oriented correctly. Currently, ADA panels serving the site driveway are set back from the edge of the driveway due to the driveway radii. The maximum allowable setback for ADA panels is 5 feet from the back of curb; otherwise, the panel needs to be oriented along the radius. See the technical requirements for public rights-of-way in PROWAG for more information; this specific issue is discussed in section R05.2.1 of that document.*

The above items listed in Mr. Tremblay's memo are included as a potential condition of approval and will need to addressed prior to the issuance of the building permit.

c. Internal Pedestrian Access, Sidewalks and Bus Stop

The applicant is proposing to install sidewalks along the frontage of the property. Parts of the proposed sidewalk will be on the applicant's property. The bus stop is proposed to be placed at the northwest portion of the property. The applicant will need to give the City a pedestrian easement for these areas. The easements shall be part of the final application and Corporation Counsel will need to review and approve the language. The applicant is also proposing internal pedestrian circulation from the main buildings to Forest Avenue. There is also pedestrian access from the retail building to the convenience store. Mr. Tremblay has reviewed this and offers his recommendations:

Figure 3: Proposed Internal Walkways and Along Forest Avenue

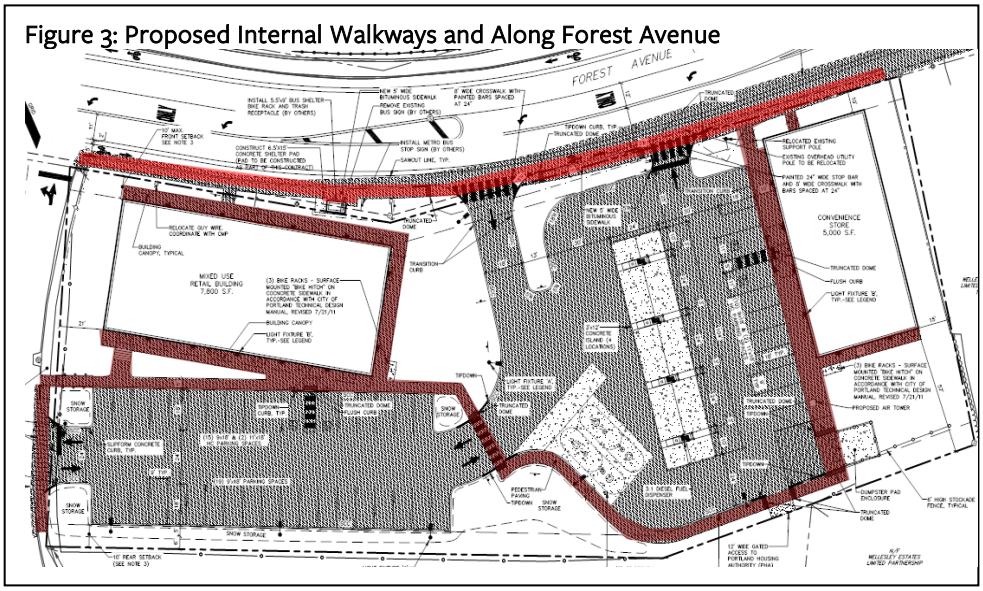

- *There are a significant number of pedestrian ramps in the vicinity of the PHA driveway and dumpster. Chief Mike Thompson from the Portland Fire Department has said that a mountable curb at the PHA emergency access is acceptable; this will eliminate the need for two ramps at the driveway.*

2. Environmental Quality Standards

a. Landscaping and Landscape Preservation

The property currently has mature white pine trees that will be cleared for the proposed development. City staff members have encouraged the design team to consider opportunities to preserve the existing vegetation, but the condition of the trees and the on-site circulation does not make this feasible. The applicant is proposing plantings around the property. Due to the close proximity to residential development, there needs to be a thicker buffer around the rear of the property. Jeff Tarling, City Arborist, has reviewed the landscaping plan and suggests denser landscaping buffer area between this project and the residential dwellings in the rear of the property. Mr. Tarling comments state the proposed mixed-tenant development, convenience store, with fueling station is on a busy gateway into Portland and adjacent to a large housing project. The landscape treatment using trees and buffer planting are key

elements to help this fit into the site given the nearby residential use. The site is currently wooded with a dense grove of White Pine. He recommends the following to achieve a denser landscaping at the site:

> *...adding (4) street trees along Forest Avenue and (2) parking lot trees on the island bump outs. Adding future shade to the vast paved surfaces purposely has a cooling effect in the summer and provides a more pleasing landscape. The trees along Forest Avenue will help define the gateway into Portland.*

Figure 4: Additional Requested Trees by City Arborist

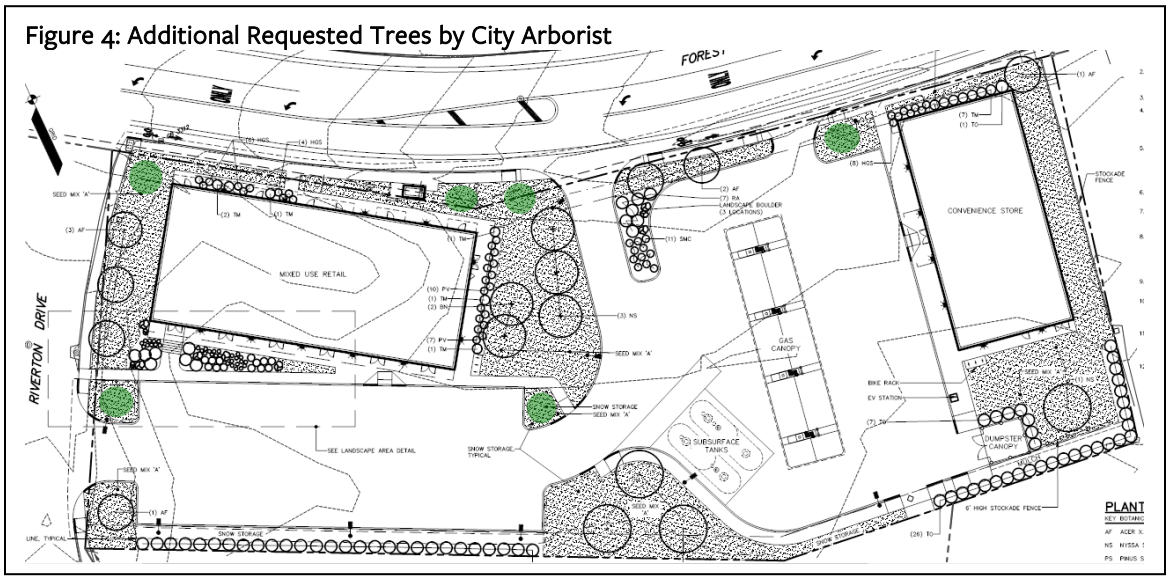

b. Water Quality, Storm Water Management and Erosion Control

This project is required to comply with the MaineDEP Basic and General Standards and the City will be the reviewing stormwater under its delegated review authority. In addition to the Basic and General Standards, the City of Portland requires that all Level III site plan applications conform to the Flooding Standards. The applicant has requested a waiver of this standard due to a small amount of stormwater from site will need to go into the combined sewer in Riverton Drive. The increase in stormwater flow is 0.01 cfs in the 10 and 25-year storm events. The applicant is proposing a significant stormwater system on their site and is tying into the Riverton Drive stormdrain, but their problem is that with the undeveloped site, there is essentially zero stormwater runoff onto adjacent properties. The project development will require removal of most of the vegetation on the site, and it will be revegetated in accordance with the City regulations. The project will utilize a Subsurface Underdrained Soil Filter for stormwater treatment and detention. Lauren Swett, Consultant Engineer with Woodard and Curran, has conducted a review of the project and finds it acceptable.

3. Public Infrastructure and Community Safety Standards

Chief Robert Thompson of the Fire Department has reviewed the proposed project and states that the Fire Department has no concerns about this project as presented.

a. Availability and Adequate Capacity of Public Utilities

The project will be served by the Portland Water District, City Department of Public Works (DPW), and underground\ power /cable/communications. A capacity letters from Department of Public Works has been submitted but the applicant will need to submit adequate capacity letters for water from Portland Water District.

4. Site Design Standards

a. Snow and Ice Loading

The applicant shows the snow storage on the site plan. If snow is being removed from the site, a management plan will need to be submitted as well.

b. Exterior Lighting

A lighting/ photometric plan been submitted for review. All the proposed lighting and catalogue cuts for all proposed fixtures and shall meet the new lighting standards of the Technical Manual, Section 12, specifically the lighting trespass at property boundaries and illumination levels.

c. Noise and Vibration

The applicant has not submitted any information on mechanical equipment (including emergency generator). All mechanical equipment will need to be shown on the site plans and noise levels information submitted for review.

d. Signage and Wayfinding

A signage plan has been submitted that shows the directional traffic signs. Mr. Tremblay reviewed the plan and offers the following are some of his recommendation, refer to Attachment 2 for review comments:

- *The directional arrows on Riverton Drive are not necessary and should be deleted. The northbound arrows in particular are incorrect. If installed, any incorrect markings will be required to be removed at the expense of the Applicant.*

- *The exit onto Forest Avenue should be marked with a right turn arrow rather than a straight arrow, to imply that a right turn is the only permitted movement from that driveway.*

- *An additional No Left Turn sign should be installed opposite the Forest Avenue exit driveway to reinforce this restriction.*

e. Zoning Related Design Standards

The project at 1884 Forest Avenue was reviewed according to the *City of Portland Design Manual* standards by Caitlin Cameron, Urban Designer, Shukria Wiar, Planner, and Jean Fraser, Planner against *the B-2 Commercial Business Zones Standards* (Design Manual). Some relevant design review comments are as follows:

- **The site plan and building elevations differ – please clarify what is being proposed/approved.**
- **The Convenience Store does not meet the standards outlined below:**
    - ***Standard (1) d. Windows*** – Windows provided on all street-facing façades. ***.7 VT required***.
    - ***Standard (1) e. Façade Character*** – Convenience Store – **Not met**: The building location is relatively close to the street and includes some storefront windows facing the street – **the door facing the street was removed. The orientation of this building is away from the street towards the surface parking lot – does not meet the standard. Clarify whether there is a functional entrance facing the street.** Mixed Use - met: Building meets this standard with direct orientation of storefront and doors to the street with canopies and signage. However**, retail frontage should have direct relationship to sidewalk with hardscape – update the site plan to show this connection and interface. These doors must be functional.**

Standard (1) g. Building Materials – Clapboard and storefront are considered compatible. Convenience Store: A strong, durable base material is logical - **masonry base would be more appropriate than stone (which is not found in this context). The stone panels next to the entrance are heavy and out of place –** clapboard would be more appropriate material placement

VIII. STAFF RECOMMENTATION

Subject to the proposed motions and conditions of approval listed below, Planning Division staff recommends that the Planning Board approve the proposed development, subject to the following waivers and conditions outlined below.

IX. PLANNING BOARD RECOMMENDATION

A. WAIVERS

On the basis of the application, plans, reports and other information submitted by the applicant; findings and recommendations contained in the planning board report for the public hearing for application PL-000314-2018 relevant to Portland's technical and design standards and other regulations; and the testimony presented at the Planning Board hearing:

1. The Planning Board **[finds/does not find]**, based upon the consulting traffic engineer's review, that extraordinary conditions exist or undue hardship may result from strict compliance with the *Technical Manual* standard (*Section 1.7.2.8)* states no more than two driveways shall be permitted for ingress and egress. The Planning Board **[waives /does not waive]** the Technical Manual standard (*Section 1.7.2.8)* to allow three driveways on the site: two (2) one-ways from Forest Ave and (1) one two-way from Riverton Drive;

2. The Planning Board **[finds/does not find]**, based upon the consulting civil engineer's review, undue hardship may result from strict compliance with the Technical Manual standard (*Section 5),* development shall comply with basic, general and flooding standards of Chapter 500. The Planning Board **[waives /does not waive]** the Technical Manual standard (*Section 5)* to allow an increase of 0.01 c.f. stormwater flow into the combined sanitary sewer line in Riverton Drive.

B. CONDITIONAL USE

On the basis of the application, plans, reports and other information submitted by the applicant; findings and recommendations contained in the Planning Board report for the public hearing for application PL-000314-2018 relevant to Portland's Zoning ordinance section 14-183 and Section 14-474 and the testimony presented at the Planning Board hearing, the Planning Board finds that the plan [**is/is not**] in conformance with the conditional use standards of the Land Use Code.

C. TRAFFIC MOVEMENT PERMIT

That based upon the City of Portland's Delegated Review Authority, the Portland Planning Board finds the plan [**is/ is not**] in conformance with the standards for Traffic Movement Permit application for PL-000314-2018 and [**grants /does not grant**] a permit.

D. SITE PLAN REVIEW

On the basis of the application, plans, reports and other information submitted by the applicant; findings and recommendations contained in the Planning Board Report for PL-000314-2018 relevant to the site plan regulations; and the testimony presented at the Planning Board hearing, the Planning Board [**finds/ does not find**] that the plan is in conformance with the site plan standards of the Land Use code, subject to the following conditions of approval:

PRIOR TO ISSUANCE OF A BUILDING PERMIT

1. All the proposed lighting and catalogue cuts shall meet the new lighting standards of the Technical Manual, Section 12, specifically the lighting trespass at property boundaries and illumination levels;

2. The applicant shall address the comments provided by Mike Tremblay, Senior Engineer with the Department of Public Works, in the memorandum dated December 4, 2019 related to entry curb

radii and ADA panel orientation;

3. The applicant shall address the comments provided by Tom Errico, Consultant Traffic Engineer with TY Lin, in the memorandum dated December 5, 2019 related to offsite mitigation along Forest Avenue for traffic safety purposes;

4. The applicant shall add an additional four street trees on Forest Avenue and two trees internally on the bump-outs, as per Jeff Tarling, City Arborist, in the memorandum dated December 3, 2019; and

5. The applicant shall submit a capacity letter from the Portland Water District.

ATTACHMENTS:

PLANNING BOARD REPORT ATTACHMENTS

1. Tom Errico Memorandum dated 12.05.2019
2. Mike Tremblay Memorandum dated 12.04.2019
3. Lauren Swett Memorandum dated 12.04.2019
4. Jeff Tarling Memorandum dated 12.03.2019
5. Caitlin Cameron Memorandum dated 10.30.2019

APPLICANT'S SUBMITTAL

A. Cover Letter
   a. Cover Letter PB Comments Responses
   b. Cover Letter_Comments+Responses.08-28-19
   c. Cover Letter-Revisions+Responses_12-02-2019
B. Checklist, Application, NeighMtg
   d. Neighborhood Mtg Cert, Min, Sign In.01-03-2019
C. Right, Title, and Interest
D. State and Federal Approvals
E. Zoning Assessment
F. Exist+Prop Easement
G. Waiver Requests
H. Financial Capability
I. Technical
J. Transportation Analysis-Traffic Impact
K. Access & Circulation
L. Loading and Servicing
M. Sidewalks
N. Public Transit
O. Off-street Parking
P. Bicycle Parking
Q. Snow Storage
R. Traffic Demand Management
S. Pres of Sig Natural Features
T. Landscaping and Lighting Pres
U. Site Landscaping
V. Parking Lot Landscaping
W. Street Trees
X. WaterQual, SWtrMngmt, ESC
Y. Consistency with City Master Plan
Z. Public Safety and Fire Prevention

AA. Available and Adequacy Public Utilities
BB. Mass, Ventilation, Wind Impact
CC. Shadows
DD. Snow Ice Loading
EE. View Corridor
FF. Historic Resource
GG. Exterior Lighting
HH. Noise and Vibration
II. Signage Wayfinding
JJ. Zone Related Design Standards
KK. Construction Management Plan
LL. Financial Capacity Letter

PLANS

Plan 1 Cover Letter
Plan 2 Existing Conditions Plan
Plan 3 Signage and Wayfinding Plan
Plan 4 Grading and Utility Plan
Plan 5 Landscaping Plan
Plan 6 ESC Notes & Details
Plan 7 Details
Plan 8 Details
Plan 9 Details
Plan 10 PreDevWatershed Plan(1of2)
Plan 11 PostDevWatershed Plan(2of2)
Plan 12 Offsite Improvement Plan(1of1)
Plan 13 Concept Off-Site Improvements
Plan 14 Convenience Store Renderings
Plan 15 Retail Renderings
Plan 16 Convenience Elevation E+W
Plan 17 Convenience Elevation N+S
Plan 18 Convenience, 1st Floor
Plan 19 Retail Elevation E+W
Plan 20 Retail Elevations N+S
Plan 21 Retail Floor Plan

Portland Maine Yes. Google's good here.

Shukria Wiar <shukriaw@portlandmaine.gov>

1884 Forest Avenue - Traffic Movement Permit Final Comments

Tom Errico <thomas.errico@tylin.com> Thu, Dec 5, 2019 at 11:12 AM
To: Shukria Wiar <shukriaw@portlandmaine.gov>
Cc: Bruce Hyman <bhyman@portlandmaine.gov>, Mike Tremblay <mtremblay@portlandmaine.gov>, Jeremiah Bartlett <JBartlett@portlandmaine.gov>

Hi Shukria – The following is a final status update regarding prior Traffic Movement Permit comments.

- The City will provide an updated list of other development projects, particularly projects on Riverside Street and Riverside Industrial Parkway.

Status: The Study reflects other development projects and I find the assumptions in the study to be acceptable.

Final Status: I have no further comment.

- The City requests that the Trip Generation be based on the 7th Edition of the Trip Generation Manual to fully comply with MaineDOT requirements.

Status: The Study reflects this change and I find the assumptions in the study to be acceptable.

Final Status: I have no further comment.

- A detailed evaluation (with mitigation strategies) of the High Crash Locations at Forest/Riverside and the Forest Avenue segment is required.

Status: The safety analysis needs further detail and refinement. We would like to identify some actions for mitigating both High Crash Locations. I will review with City staff and provide some specific guidance in the future.

Final Status: The applicant has conducted an acceptable safety analysis and identified mitigation improvements on Forest Avenue. The applicant shall be responsible for all cost associated with implementation of improvements as detailed on the Concept Off-Site Improvement Plan prepared by Sebago Technics dated October 15, 2019. Final design plans shall be provided to the City for review and approval.

- A review of driveways including elimination of the right-turn exit, is required. The Applicant shall provide supporting documentation for maintaining the right-turn only driveway. If the right-turn driveway is deemed necessary, the geometric alignment/configuration will need to seek a balance between vehicle movements, lower speeds, and pedestrian safety. I would note the current plan requires a waiver from City standards for the number of driveways.

Status: The study included a detailed evaluation of the driveway configurations and thus meets this requirement. The proposed driveway configuration is acceptable with recommended changes as identified by Mike Tremblay of DPW.

Final Status: I have no further comment but refer to Mike Tremblay's final comments.

- A review of Saturday traffic volumes will be performed and if significantly less than weekday volumes, a Saturday analysis may be eliminated. This shall be coordinated with City staff.

Status: The traffic study included a review of Saturday peak hour conditions. I have no further comment.

Final Status: I have no further comment.

- The traffic study shall include the Forest/Riverside, Forest/Riverside Industrial Parkway, Forest/Riverton Drive intersections.

Status: The traffic study included the noted intersections and I have no further comment.

Final Status: I have no further comment.

- The bus shelter on project site shall be coordinated with METRO and pedestrian crossing of Forest Avenue shall be investigated.

Status: Bruce Hyman is conducting the review of this item. Refer to his comments.

Final Status: I have no further comment but refer to Bruce Hyman's final comments.

- The Applicant shall evaluate the need for a left-turn lane on Forest Avenue. The site frontage shall reflect either a condition with a left-turn lane or, if not warranted, without. The current site plan is not acceptable given that it does not depict a left-turn lane and includes a westerly curb alignment with widening for a three-lane section on Forest Avenue.

Status: The applicant has provided an analysis of various access/egress scenarios. The study supports the need for a left-turn lane from an operational analysis perspective. I continue to review this and the plan details, but conceptually the provision of a left-turn lane seems appropriate.

Final Status: The City concurs with the applicants request for provision of a left-turn lane on Forest Avenue for improved safety and mobility. The left-turn lane layout is detailed on the Concept Off-Site Improvement Plan prepared by Sebago Technics dated September 11, 2019 and the most current site plan. The applicant shall be responsible for all cost associated with implementation. Final design plans shall be provided to the City for review and approval.

- Safe and logical pedestrian facilities shall be provided between Riverton Drive and the store.

Status: I continue to review this.

Final Status: The applicant has incorporated facility revisions and I find conditions to be acceptable. Please refer to final comments from Bruce Hyman and Mike Tremblay.

New Comments

- The study suggests improvements at the Forest Avenue/Riverside Street intersection. I continue to review the analysis and will provide comments in the future.

Final Status: The applicant has identified improvements at the Forest Avenue/Riverside Street intersection as detailed on the Concept Off-Site Improvement Plan prepared by Sebago Technics dated October 15, 2019 . The applicant shall be responsible for all cost associated with implementation. Final design plans shall be provided to the City for review and approval.

If you have any questions, please contact me.

Best regards,

Thomas A. Errico, PE
Senior Associate
Traffic Engineering Director
T·Y·LIN INTERNATIONAL
12 Northbrook Drive
Falmouth, ME 04105
+1.207.781.4721 main
+1.207.347.4354 direct
+1.207.400.0719 mobile
thomas.errico@tylin.com
Visit us online at www.tylin.com
Twitter | Facebook | LinkedIn | Instagram

CITY OF PORTLAND
Department of Public Works
Christopher C. Branch, P.E., Director

December 4, 2019

Shukria Wiar
City of Portland Planning Division
389 Congress Street
Portland, Maine 04101

Subject: 1884 Forest Avenue DPW Comments

Dear Shukria,

I have the following comments regarding the 1884 Forest Avenue development application. For the purposes of this memo, I am referring to plans submitted by the Applicant dated December 3, 2019. These comments should be considered for conditions of approval, to be addressed before issuance of an occupancy permit unless otherwise noted.

- The entrance driveway from Forest Avenue has a large southerly radius, which is not necessary as vehicles should not be exiting and turning right from this driveway. This radius should be reduced to five feet, or the minimum required to accommodate left-turning trucks, whichever is larger.
- ADA panels are not required at any site driveway or internal to the site. These are not required at unsignalized driveways or within developments. If the Applicant chooses to include them, they should be oriented correctly. Currently, ADA panels serving the site driveway are set back from the edge of the driveway due to the driveway radii. The maximum allowable setback for ADA panels is 5 feet from the back of curb; otherwise, the panel needs to be oriented along the radius. See the technical requirements for public rights-of-way in PROWAG for more information; this specific issue is discussed in section R05.2.1 of that document.
- The directional arrows on Riverton Drive are not necessary and should be deleted. The northbound arrows in particular are incorrect. If installed, any incorrect markings will be required to be removed at the expense of the Applicant.
- The exit onto Forest Avenue should be marked with a right turn arrow rather than a straight arrow, to imply that a right turn is the only permitted movement from that

driveway.

- An additional No Left Turn sign should be installed opposite the Forest Avenue exit driveway to reinforce this restriction.
- There are a significant number of pedestrian ramps in the vicinity of the PHA driveway and dumpster. Chief Mike Thompson from the Portland Fire Department has said that a mountable curb at the PHA emergency access is acceptable; this will eliminate the need for two ramps at the driveway.

Respectfully,



Mike Tremblay, P.E.
Senior Engineer
City of Portland, Public Works

CC:
James Rather, City of Portland
Christine Grimando, City of Portland
Bruce Hyman, City of Portland

Portland Maine Yes. Google's good here.

Shukria Wiar <shukriaw@portlandmaine.gov>

1884 Forest (314-2018)

2 messages

Lauren Swett <lswett@woodardcurran.com> Wed, Dec 4, 2019 at 10:32 AM
To: Bradley Roland <brad@portlandmaine.gov>
Cc: Shukria Wiar <shukriaw@portlandmaine.gov>

Hi Brad,

For 1884 Forest Avenue, there are two things needed:

- Sewer capacity approval (I've attached the latest)
- Confirmation of waiver of flooding – they are increasing by 0.01 CFS:

Stormwater Peak Runoff Summary Table			
Study Point	**Storm Event**	**Pre-Development (cfs)**	**Post-Development (cfs)**
SP-1	2-year	0.00	0.00
	10-year	0.00	0.01
	25-year	0.02	0.03
SP-2	2-year	0.00	0.00
	10-year	0.00	0.00
	25-year	0.01	0.00

Flow from the site in general is almost non-existent, so I don't think this is an issue, but just wanted to confirm with you as it is going into the combined sewer.

Any questions, let me know!!

Lauren

Lauren Swett, P.E.*

Technical Manager

Woodard & Curran

41 Hutchins Drive

Portland, Maine 04102

Phone: (207)558-3763 (direct)

(207)219-3591 (cell)

(800)426-4262 (office)

Email: lswett@woodardcurran.com

*Licensed in Maine and Wisconsin

Commitment & Integrity Drive Results

www.woodardcurran.com

M.ASCE

Chair, Leader Training Committee

American Society of Civil Engineers

http://regions.asce.org/leader-training-committee/

27-Avail+Adequacy Public Utilities.pdf
261K

Bradley Roland <brad@portlandmaine.gov> Wed, Dec 4, 2019 at 12:59 PM
To: Lauren Swett <lswett@woodardcurran.com>
Cc: Shukria Wiar <shukriaw@portlandmaine.gov>

Morning Ladies,
I released the wastewater capacity letter back in June - see attached.
And they are tying into the storm drain - 12 inch.
and I agree the small amount of flow should not matter.
Brad
--
Bradley A. Roland, P.E.
Senior Project Engineer
Portland Public Works
212 Canco Road
Portland, ME 04103
Tel: 207-874-8840
Fax: 207-874-8852
brad@portlandmaine.gov

[Quoted text hidden]

2 attachments

1884 Forest Ave - Storm Drain Connection.pdf
258K

Wastewater Capacity Authorization 2019-06-18 1884 Forest Avenue.pdf
116K

Att. 4

Portland Maine Yes. Google's good here.

Shukria Wiar <shukriaw@portlandmaine.gov>

Chau, PL-000314-2018, 1884 Forest Avenue

Jeff Tarling <jst@portlandmaine.gov> Tue, Dec 3, 2019 at 11:09 AM
To: Shukria Wiar <shukriaw@portlandmaine.gov>

Hi Shukria -

In review of the proposed 1884 Forest Avenue project would like to offer the following comments & conditions for the tree and landscape plan.

Existing conditions include a dense stand of White Pine that adds to the streetscape of busy Forest Avenue and buffers the nearby Portland Housing's Riverton Park. Due to the extent of the proposed development and related site work, none of the existing trees were attempted to be saved or likely could have survived. Early on during the review process there was some discussion about narrowing the parking lot width, reducing the number of fueling stations to see if some of the existing buffer could be saved...

Thus, working with the current design, we would recommend adding (4) street trees along Forest Avenue and (2) parking lot trees on the island bump outs. Adding future shade to the vast paved surfaces purposely has a cooling effect in the summer and provides a more pleasing landscape. The trees along Forest Avenue will help define the gateway into Portland.

Other tree & landscape notes: The project edge along the Riverton Park housing complex is important in regards to buffering the commercial to residential use. The proposed Arborvitae hedge should help in time once they get established. The current condition in regards to the condition of the existing fencing should be checked. The Landscape Key shows the size of the Arborvitae as 3" caliper, wanted to relay that conifers are typically measured in height (H), guessing the proposed size at planting to be 6-7' H. Shade trees are shown at 3" caliper, wanted to note that often the smaller 2 - 2.5" caliper trees are quicker to establish due to less transplant shock.

The recommended tree additions should help the project fit into the Riverton neighborhood.

Jeff



1884 Forest Avenue - Additional tree locations, (approximate)

Jeff Tarling
City Arborist - City of Portland Maine
Parks, Recreation & Facilities Department
Forestry & Horticulture
212 Canco Road
Portland, ME. 04103
(207) 808-5446
jst@portlandmaine.gov

[Quoted text hidden]

Planning and Urban Development Department
Planning Division

Subject:	B-2 Design Review – 1884 Forest Avenue
Written by:	Caitlin Cameron, Urban Designer
Date of Review:	Wednesday, October 30 2019

The project at 1884 Forest Avenue was reviewed according to the *City of Portland Design Manual* standards by Caitlin Cameron, Urban Designer, Shukria Wiar, Planner, and Jean Fraser, Planner against *the B2 Commercial Business Zones Standards* (Design Manual).

Design Review Comments*:*

- The site plan and building elevations differ – clarify what is being proposed/approved.
- The Convenience Store does not meet the standards.

(d) B-2 Commercial Business Zones

Standard (1) a. Urban Street Wall – Not applicable – context does not have an existing street wall

Standard (1) b. Mixed Uses – Not applicable – B2 zone

Standard (1) c. Building Entrances – Not applicable

Standard (1) d. Windows – Windows provided on all street-facing façades. .7 VT required.

Standard (1) e. Façade Character – Convenience Store – Not met: The building location is relatively close to the street and includes some storefront windows facing the street – the door facing the street was removed. The orientation of this building is away from the street towards the surface parking lot – does not meet the standard. Clarify whether there is a functional entrance facing the street. Mixed Use - met: Building meets this standard with direct orientation of storefront and doors to the street with canopies and signage. However, retail frontage should have direct relationship to sidewalk with hardscape – update the site plan to show this connection and interface. These doors must be functional.

Standard (1) f. Building Design – The building design is consistent with the type of commercial building in the same streetscape and off-peninsula character. Though only one-story, building has some elements (dormers, pitched roofs) making it slightly more appropriate height for the wide commercial street and create a compatible character with the residential neighbors.

Standard (1) g. Building Materials – Clapboard and storefront are considered compatible. Convenience Store: A strong, durable base material is logical - masonry base would be more appropriate than stone (which is not found in this context). The stone panels next to the entrance are heavy and out of place – clapboard would be more appropriate material placement.

Standard (1) h. Building Scale – Not applicable

Standard (1) i. Landscaping and Buffers – Fence and landscape buffers are provided around the perimeter of the property as screening for neighboring residential properties.

April 17, 2019
11142

City of Portland Planning Department
Shukria Wiar, Planner
389 Congress Street, 4th Floor
Portland, Maine 04101

Revisions and Responses to Review Comments-Level III Site Plan Application Submittal
Applicant: Pine State Family Mart c/o John Chau
1884 Forest Avenue, Tax Reference: 327-B-3

Dear Ms Wiar:

On behalf of Mr. John Chau, we have assembled the following revised plan sets for the Level III Site Submittal for the mixed use retail space and convenience store/gas station located at 1884 Forest Avenue. The project, known as Pine State Family Mart has continued the planning and traffic design of the facility and would like to move forward with the City Planning Board review process. In parallel with the City Site Plan Review, the City is also reviewing a MDOT Traffic Movement Permit under the provisions of delegated review.

This location is within the B-2 Community Business Zoning. The project site is approximately 1.61 acres in size and has access to Forest Avenue and Riverton Drive. The development program includes construction of two new drives from Forest Avenue and access via Riverton Drive. The one-story retail building is 7,800 square-foot +/- and the convenience store will be 5,000 square feet +/- with four fueling islands. In total the disturbed area for development area is approximately 1.6 acres. The project will require a Maine Department of Transportation (MDOT) Traffic Movement Permit (TMP). The application has been submitted to the City for delegated review concurrently this application. No other State or Federal permits are required as part of the site development.

We received comments from the City in early 2019 from our September submission. Here within we are addressing those directly or with attached plans or other submitted documents. We received comments, relating to planning, transportation, landscaping and general site engineering/stormwater management reviews below:

Civil Engineering - Third Party Reviewer Lauren Swett:

1. Applicant has noted that verification of utility ability to serve will be provided upon receipt.

2. Based on the Storm Drain Structure Data table on the Grading and Utility Plan, some of the proposed stormdrain pipes will have less than 3 feet of cover (see CB3, CB4, and ICS1 for example). It is recommended that insulation be provided to address frost depth concerns.

   Insulation has been provided where cover is less than 3 feet, and is indicated on the grading and utility plan. Also, to be noted, ICS1 and OCS1 rim elevations were incorrectly reported in structure table and they have been corrected.

3. CB4 and the stormdrain piping between CB3 and CB4 is in close proximity to the dumpster enclosure and dumpster pad. It is suggested that a slight adjustment be made to the stormdrain to avoid construction conflicts.

   The dumpster pad has been moved back from the stormdrain system.

4. In accordance with the Maine DEP Chapter 500 Regulations and Section 5 of the City's Technical Manual, the Applicant is required to meet the Basic, General, and Flooding Standards for Stormwater Management. The Applicant has proposed erosion and sedimentation control features to meet the Basic Standard and an underdrained subsurface sand filter to help meet the General and Flooding Standards. The following comments should be addressed on the proposed stormwater management plan:

   We will amend the plan accordingly to add the requested information.

5. Please clarify the time of concentration line that is shown for subcatchment 10S on the post-development watershed plan. It appears that the line as drawn does not match what was utilized in the HydroCAD model. Likely the change will not impact the model results, but please clarify. It's also noted that the post-development drawing title is incorrectly listed as pre-development.

   The time of concentration line did match what was utilized in the model. However, a later change in stormdrain design moved a drainage structure which caused the time of concentration line to not appear over the stormdrain pipe. This has been corrected on both the plans and in the model. The sheet has also been corrected to read post-development watershed plan.

6. Looking at the HydroCAD output, it appears from the post development routing diagram that there will be a secondary discharge from ICS1 to the study point. This would be expected based on the weir detail for the inlet control structure on Sheet 8. The calculation output for the ICS1 node in HydroCAD does not show a secondary flow. Please clarify.

   There is no secondary outlet from ICS1, the HydroCAD (diagram only) showed this incorrectly. There is no weir in ICS1 or ICS2. The weir detail is located in the outlet control structure OCS1. Details have been eliminated/updated to correctly represent the system. The HydroCAD model has been updated to include a few more structures to better represent the system and its bypass.

7. Please clarify the design of ICS2. The Stormdrain Structure Data table identifies only a single invert out; however the plan appears to show two outlets. This structure has not been included in the overall HydroCAD model, but the Applicant should confirm that the elevation layout of the proposed structures will not result in any overflow at this location near the entrance. In addition, the Maine DEP BMP design guidelines indicate that multiple pre-treatment rows (isolator rows) are required if there are multiple inlet points to the system.

Details have been eliminated/updated to correctly represent the system.

8. Sheet 8 includes details for an inlet control structure and an outlet control structure and sheet 9 includes two outlet control structures and an inlet vault. Please clarify the appropriate details for use on the site, and update with elevations and pipe sizes specific to the project plans. Similarly, the elevations provided on all of the underdrained sand filter details should be updated specific to the project plans.

   Details have been eliminated/updated to correctly represent the system.

9. The subsurface underdrained sand filter details show a typical system layout with chambers, underdrains, cleanout manholes, inspection ports, header pipes, a single inlet, and a single outlet. A site-specific layout of the proposed chambers, underdrain piping, structures and other critical components should be provided, either in a detail or directly on the plan to show how the system will fit onto the site.

   Details have been eliminated/updated to correctly represent the system.

10. The Maine DEP BMP design guidelines indicate that a minimum of 1-foot separation be provided from the seasonal high groundwater table and bedrock. The soil type, per the submitted soil survey, would indicate that this will not be an issue, but the Applicant should verify that this separation can be met without the need for an impermeable liner, as this would impact the HydroCAD model's assumption of discarded exfiltration.

    Agreed, the Maine DEP does require separation. A test pit will need to be performed prior to construction to confirm depth of seasonal high ground water and presence (if any) of bedrock within the subsurface treatment's footprint. With the pre-development flow rates being so low, the discarded exfiltration is required for us meet our rates.

11. Note that the SPCC plans developed for the project should identify that a filtration stormwater treatment system is installed on site.

    We have added an oil water separator upstream of the treatment train, as means to further protect form accidental spills form the gas pump area. We also added snouts to each of the cathcbaisn within the gas pump drainage collection areas.

12. Cleanup procedures should consider the impact of spills at the proposed fueling station on the proposed stormwater treatment system.

    We agree, see recommendation above.

13. The stormdrain structure data table is missing diameter information for structure diameter. Based on the symbolism used on the plans, it appears that a smaller structure will be used. Details have been provided for field inlets and "Type F" catch basins. Please clarify.

    There are two "Type F" catch basins, the filed inlet catch basin detail is not being used has been removed. The structure data table has been updated to call out these structures.

Planning Shukri Wiar:

1. Evidence of financial and technical capacity

   That was submitted earlier via electronic submission.

2. Evidence of utilities' capacity to serve the development.

   Those were submitted with the original application and we have yet to hear from the City Departments.

3. Existing and proposed easements or public or private rights of way- show it on the site plans. Clarify the easement in question.
   We have added proposed easement on the plan, and the easement for the Portland Housing Authority has never been substantiated. Mr. Chau has agreed verbally to allow the Housing Authority permission to gain access across this site to their current gate for maintenance or emergency needs.
4. Written summary of solid waste generation and proposed management of solid waste.
   We have added a section regarding solid waste generation and handling which will be by all handled by private contractor.
5. Manufacturer's verification that HVAC and manufacturing equipment meets applicable state and federal emissions requirements. Show location of HVAC and mechanical equipment.
   All HVAC units will meet applicable state and federal emissions requirements, HVAC units are located within the building and the condenser units are located in a recessed roof on the retail building, and the HVAC units are locate in the attic of the Convenience store vented through the roof on the back side.
6. Submit a Construction management plan.
   A construction management plan has been previously submitted.
7. Provide cut sheets and photometric plan for all proposed exterior lights.
   A photometric plan and cut sheets have been previously submitted for all freestanding lights.
8. Please submit a Signage and Wayfinding plan.
   We have prepared a wayfinding Sign Plan for the proposed site internal traffic circulation.
9. Provide height calculation based on average grade. We believe the architect Ryan Senatore has provided the average grade for the buildings. The average grade and building height calculations are indicated on the Architectural Elevations. Only the Retail Building will have any variance due to the grading associated with the ground around the footprint.
10. Parking Calculation is pending – We provided our breakdown on the site plan for required parking.
11. Due to two buildings on site, EnerGov will have to be updated with data for both buildings.
    We understand that this will be addressed separately by the Architect.

Transportation/Planning Bruce Hyman
Site Plan

1.- The site plan is poorly oriented/designed for quality pedestrian access from Forest Avenue to the proposed buildings and storefronts. We have added direct access to the site buildings from Forest Avenue. Given that this is a very limited sized zone for outer Forest Avenue there are not many other similar businesses exposed to this requirement in this location.
2. - The site plan is poorly designed for quality pedestrian access along Forest Avenue. The frontage is highly oriented to automobile access with several features - notably the proposed driveways - that create a poor pedestrian experience and create safety issues for pedestrians. We have met with staff and re-orientated the second vehicle exit onto Forest Avenue which aligns, also the sidewalk to remain almost parallel to the street for the entire frontage and creates a safer crossing.

3. - The walkway along the parking lot for the mixed use building is to provide a usable 5' of width, possibly requiring provisions keeping motor vehicle bumpers (front or rear) from extending onto the walkway or providing a wider walkway. We have widened the sidewalk to 6 feet in the noted area which at worst case will leave a 4 foot wide opening if vehicle like a truck backs up to the curb.
4.- Crosswalks where provided adjacent to public streets are to be 8' in width (not 5').
We have corrected the width of crosswalks to 8 feet
5.- The easterly driveway is to be 1) eliminated [preferred] or 2) justified via a waiver request and if justified/approved, its orientation is to be revised so as to not interrupt the pedestrian access route along Forest Ave and to not create a pedestrian safety issue due to its configuration. We have revised the orientation and have requested a separate waiver request for the second access supported by the need that the site truly needs the access for safer turns for morning southbound access and without creates troubled conflicts internally, and that the gas station is restricted to access less in width than other gas service businesses that serve on Forest Avenue, and that zoning prohibits us to relocate the building further back to promote a safer exit movement strategy with the pump islands. The impact of the waiver request will not reduce pedestrian safety.
6. - Measures may be required to prohibit left turns from the central driveway on Forest Avenue pending traffic analysis. We have currently restricted movements out of the fForest avenue curb cuts and direct all left turn s out to the Riverside Drive access point, such they will turn left at the Riverside Dr Forest Ave intersection.
7. - There appear to be cobra head light fixtures across the street. Consideration should be given to providing additional street/sidewalk lighting along the project frontage. We have discussed adding building wall pac lighting at the Retail store Frontage and suggested a second light at the second curb cut/exit from the site. The close proximity of light from the building will add safety lighting for the sidewalk ten feet away. Lighting exists on the pole at the intersection of Riverside Drive.
8. - The curb alignment on the site frontage as shown does not make sense given the vehicular access (no turn lanes in or out of the site. IF the curb line is intended to accommodate different traffic movements than shown then that is to be shown on an updated site plan as part of the consideration/approval process for overall site access. If different site access than shown is not anticipated, the curb alignment is to be reconfigured for better pedestrian access along the frontage and to reduce the likelihood of high speed traffic entering/exiting the site. Revised alignments to accommodate discussed traffic patterns as proposed with documented traffic study counts and design have been provided with this revision.
9. - Improved pedestrian access/pedestrian crossing of Forest Avenue to the opposite side of the street to the existing or a relocated bus stop is to be considered as part of the traffic/transportation study. For instance, IF a NB left turn lane is anticipated into the site via the driveway on Forest Avenue, this introduces an opportunity for a pedestrian crossing/crosswalk in conjunction with that left turn lane to a relocated and more ADA accessible bus stop.
The Bus stop location is existing to the area, and the METRO bus system has been working to provide a new bus shelter at the location as proposed(Merely fee feet from wee the stop is now) Currently there is a crosswalk at the NB side of Forest Avenue which allows those

commuters to cross Forest Ave. nearer the intersection of Riverside Dr. (Just North of the intersection) The opposite side of the street from SB bus shelter is along a retaining wall section close to the sidewalk for the site on the opposite side, and is not the ideal location for a ADA ramp or gathering area, given the restricted room for grading and fitting against a wall.

10. Different retail building orientations relative to the street and site features (parking lot, etc) should be considered.
    This has been addressed by Ryan Senatore the Architect in separate response.

Details

11. Paver detectable warning panels are not to be used at crosswalks where they are needed/used.
    We will provide City approved warning surfaces at crosswalk ramp landings.
12. No detail was provided for sidewalks either internal to the site nor within the public ROW.
    Details of sidewalk cross sections have been added to the detail sheet.

Renderings

13. The provided renderings to not accurately reflect the site plan. We will update overall site rendering for the public meetings, and we believe that the architect has provided revised renderings of the buildings.

Landscaping Review –Jeff Tarling

In review of the proposed 1884 Forest Avenue project, offer the following tree & landscape recommendations and conditions:

a) Street & Parking Lot Trees - The project needs additional parking lot trees and landscape to meet the parking lot landscape standard. See attached. This would include planting trees in the three parking lot islands, two near the entrance / exit to the north along with additional three ornamental trees along the Forest Avenue street frontage and one additional street tree near the proposed convenience store, where the 'Seed Mix A' is shown on the plan. The parking lot islands could be landscaped in addition to the requested parking lot trees vs 'Seed Mix A' as shown. This should be a condition of approval.
   We have revised the landscape plan to incorporate the City Arborist request to the best of our abilities but have some reservation about the trees being able to withstand winter snow plowing removal

b) Snow storage behind the proposed convenience store? How would the snow get there and where would it drain to?
   That snow storage area was in error and has been removed.

c) Fencing - the property line edge along the southern edge and the property line to the nearby residential properties should include some type of fencing, this would be the two sides. Any existing fence should be evaluated to see if it is in adequate shape and would suffice for this condition.
   The fence along the southern property line is a fairly new chainlink fence installed by the PHA, and we have discussed the addition of stockade fence along the store end to protect

residents in Wellsley Estates from headlights turning into the store. The proposed fence is shown on our updated site plan and landscape plan.

Other site improvements associated with the site development include a new bus stop shelter, bicycle parking and trash receptacle at the existing bus stop located along the lot frontage at Forest Avenue. STI has been coordinating the bus shelter with traffic engineers, Gorrill-Palmer functioning as the liaison with Greater Portland Metro. The entries are curbed and designed in conformance with City standards. Two sidewalk easements are proposed as part of the site development and the descriptions and sketches are enclosed in this site plan review application.

We addressed comments separately through the Traffic Consultant, Tom Errico PE, for the information regarding traffic movements and offsite traffic counts at the site and nearby intersections, and that has been outlined in the latest t=Traffic report. Additionally we have provided anew plan that will include Offsite Traffic Improvements Plan for the widening of Foerst Avenue to accommodate the left turn as we have proposed. Of course should the entrance solutions differ than what we propose then the curb and street alignment may too.

The applicant is hopeful to complete the permitting process through the City and MDOT by the autumn of 2018 for winter/spring project commencement and completion within one year. We look forward to working with the City and Planning/Engineering staff through the permitting process for the proposed Pine State Family Mart. As always, please contact me if you have any questions or require further information.

Sincerely,
SEBAGO TECHNICS, INC.

Jim Seymour, P.E.
Senior Project Manager

JRS/jrs

enc.

cc: J. Chau

SEBAGO TECHNICS

August 28, 2019
11142

City of Portland Planning Department
Ms. Shukria Wiar, Planner
389 Congress Street, 4th Floor
Portland, Maine 04101

Revisions and Responses to Review Comments-Level III Site Plan Application Submittal
Applicant: Pine State Family Mart c/o Mr. John Chau
1884 Forest Avenue, Tax Reference: 327-B-3

Dear Ms. Wiar:

On behalf of Mr. John Chau, we have assembled the following revised plan sets for the Level III Site Submittal for the mixed-use retail space and convenience store/gas station located at 1884 Forest Avenue. The project, known as Pine State Family Mart has continued the planning and traffic design of the facility and would like to move forward with the City Planning Board review process. In parallel with the City Site Plan Review, the City has also been reviewing a MDOT Traffic Movement Permit under the provisions of delegated review.

Following our last meeting In May, we have been waiting on final comments from the City regarding Traffic. We incorporated what we have received from the City Traffic /Engineering and staff, and also addressed some of the other items that were submitted to us just before the last Planning Board meeting. We received comments from the City in late April through mid-May. Here within we are addressing those directly or with attached plans or other submitted documents. We received comments, relating to planning, transportation, landscaping and general site engineering/stormwater management reviews below:

Civil Engineering - Third Party Reviewer - Lauren Swett:

1. Applicant has noted that verification of utility ability to serve will be provided upon receipt.

   We have spoken with Brad Roland and uploaded those figures which have been approved for the wastewater estimates. The estimated daily flow rate of sewer (domestic wastewater flow) was 2,786 gpd.

2. The stormwater narrative indicates that we would have a 0.01 cfs increase in the 10 year storm and 0.28 CFs in the 25-year storm. The question was raised to Brad Roland if they could increase the runoff, as essentially the project now has no runoff as it is totally undeveloped on very well drained soils.

Based on our computations it is nearly impossible to store and not be able to release some runoff. There are some minor losses to infiltration but we have treatment for the impervious surfaces, and lose some containment in the event of a spill in site from the gas station. However, to attempt to infiltrate all the site runoff to one compacted area is also not practical. We feel the waiver is very modest and will not impact downstream areas or watersheds.

Traffic Consultant -Tom Errico:

The following is a status update regarding the Traffic Movement Permit comments provided in January in conjunction with the scoping meeting. The Applicant has submitted Section 7 (Traffic Study) for the project.

1. The City will provide an updated list of other development projects, particularly projects on Riverside Street and Riverside Industrial Parkway.

   Status: The Study reflects other development projects and I find the assumptions in the study to be acceptable.

   Response: Noted, no response required

2. The City requests that the Trip Generation be based on the 7th Edition of the Trip Generation Manual to fully comply with MaineDOT requirements.

   Status: The Study reflects this change and I find the assumptions in the study to be acceptable.

   Response: Noted, no response required

3. A detailed evaluation (with mitigation strategies) of the High Crash Locations at Forest/Riverside and the Forest Avenue segment is required.

   Status: The safety analysis needs further detail and refinement. We would like to identify some actions for mitigating both High Crash Locations. I will review with City staff and provide some specific guidance in the future.

   Response: As identified in the previous submission, the intersection for Forest Ave and Riverside Street, as well as the segment of Forest Ave between Riverside Street and Riverton Drive are classified as High Crash Locations.

   At the intersection of Forest Avenue and Riverside Street, the majority of crashes are rear-end collisions. The crashes are shown to occur primarily on the westbound, eastbound, and northbound approaches. In general, rear end collisions are a result of heavy traffic congestion and frequent stop and go traffic, as well as driver inattentiveness. Potential mitigation would involve actions to alleviate congestion at this intersection. As outlined in the submitted traffic analysis, there are some improvements that could be implemented to lessen overall delay at the intersection. Specifically, the eastbound Forest Ave approach was noted to have unbalanced lane utilization for thru movements. The study recommended considering modifying the Forest Avenue eastbound approach to have a right turn, thru and

left turn lane. (The existing condition is a shared right/thru lane, thru lane, and left turn lane.)

On the segment of Forest Ave between Riverside Street and Riverton Drive, a majority of the reported crashes were caused by a vehicle either entering or exiting the 7 Eleven driveways. Crashes were a result of vehicles exiting the store driveways turning left failing to yield to oncoming traffic, as well as rear end collisions involving vehicles waiting to turn left into the store. The existing driveway is within the functional area of the signalized intersection. A recommended mitigation item would be to limit the existing 7-eleven driveway on Forest Ave to be right-in/right-out only.

Neither high crash location is expected to be significantly affected by project generated traffic, as a large portion of project traffic will be pass-by trips.

4. A review of driveways including elimination of the right-turn exit, is required. The Applicant shall provide supporting documentation for maintaining the right-turn only driveway. If the right-turn driveway is deemed necessary, the geometric alignment/configuration will need to seek a balance between vehicle movements, lower speeds, and pedestrian safety. I would note the current plan requires a waiver from City standards for the number of driveways.

   Status: The study included a detailed evaluation of the driveway configurations and thus meets this requirement. The proposed driveway configuration is acceptable with recommended changes as identified by Mike Tremblay of DPW.

   Response: Noted, no response required

5. A review of Saturday traffic volumes will be performed and if significantly less than weekday volumes, a Saturday analysis may be eliminated. This shall be coordinated with City staff.

   Status: The traffic study included a review of Saturday peak hour conditions. I have no further comment.

   Response: Noted, no response required

6. The traffic study shall include the Forest/Riverside, Forest/Riverside Industrial Parkway, Forest/Riverton Drive intersections.

   Status: The traffic study included the noted intersections and I have no further comment.

   Response: Noted, no response required

7. The bus shelter on project site shall be coordinated with METRO and pedestrian crossing of Forest Avenue shall be investigated.

   Status: Bruce Hyman is conducting the review of this item. Refer to his comments.

   Response: At this time no comments have been received from Bruce. The final location of the bus shelter will be coordinated with METRO and the City.

8. The Applicant shall evaluate the need for a left-turn lane on Forest Avenue. The site frontage shall reflect either a condition with a left-turn lane or, if not warranted, without. The current site plan is not acceptable given that it does not depict a left-turn lane and includes a westerly curb alignment with widening for a three-lane section on Forest Avenue.

   Status: The applicant has provided an analysis of various access/egress scenarios. The study supports the need for a left-turn lane from an operational analysis perspective. I continue to review this and the plan details, but conceptually the provision of a left-turn lane seems appropriate.

   Response: Noted, no response required

9. Safe and logical pedestrian facilities shall be provided between Riverton Drive and the store.

   Status: I continue to review this.

   Response: There is a proposed sidewalk within the site in front of the retail building, connecting to the existing Riverton Drive sidewalk.

10. **New Comments. The study suggests improvements at the Forest/Riverside intersection. I continue to review the analysis and will provide comments in the future.**

    Response: Noted, no response required

Public Services - Mike Tremblay:

1. The applicant should reduce the driveway width or provide vehicle turning movement diagrams that show that this width (18 feet) is necessary.

   We have reviewed the entrance width and although the City technical standards recommend that the width can get down to 16feet, we feel that with any vehicle larger than a passenger vehicle that would not be the case and that the 18feet width allows smaller deliver, or commercial vehicles, larger pickups/SUV's turning areas without hitting the curb. We have attached the turning radius template for the one way egress out.

2. A right-turn pavement marking, with "ONLY" stenciling, shall be provided at the exit driveway onto Forest Avenue. This restriction shall be reinforced with appropriate signage

   The requested change has been added to our revised plans.

3. The applicant can make a slightly more efficient use of their two parking areas by striping their HP-van spaces as two 8- foot spaces with an 8-foot access aisle, rather than two 11-foot spaces with 5-foot access aisle. This saves 3 feet in width in each area, which can be reallocated to snow storage or impervious surfaces.

   While the idea of using slightly less space is appealing. We feel that we do need van accessible ADA parking provisions which call for the 11 feet wide parking stall, thereby we wish to keep the stalls as designed.

4. The ADA ramps that adjoin two directions of sidewalk along Forest Ave are not oriented optimally. If possible, ramps should direct pedestrians across the crosswalk, rather than toward the roadway.

   The requested change has been added to our revised plans.

5. The crosswalk across the entrance driveway from Forest Avenue is called out as 5 feet wide, and the crosswalk across the exit driveway is called out as 8 feet wide. Both are drawn as 5 feet wide. Because these crosswalks are in the city's ROW, they should be 8 feet wide and called out as such. The crosswalk across the driveway at Riverton Drive is drawn at 8 feet wide but called out as 5 feet wide; this should be drawn and called out at 8 feet wide. Crosswalk striping should be 24-inch wide, placed at 4 feet on center (so there is a 24-inch gap between each 24-inch marking).

   The requested change has been added to our revised plans.

6. Riverton Drive approaching Forest Avenue is striped as a left/thru lane. No pavement markings are necessary on this single-lane approach.

   The requested change has been added to our revised plans.

7. There are several building entrances located along the Forest Avenue frontage of the development. If these entrances are intended to be, or may possibly be, accessible to the general public, then an ADA-accessible path should be provided from the sidewalk along Forest Avenue, and access should be provided to all building entrances via an accessible walkway. As currently designed, two of these entrances are not ADA-accessible, and the remaining entrances would require someone to maneuver into the site and double back up toward Forest Avenue. If ADA-accessible entrances are not possible, then appropriate signage directing pedestrians toward the accessible entrance shall be provided in view of the inaccessible walkways so that those with accessibility needs know how to access the building.

   The requested change has been added to our revised plans. The elevation drop and proximity to the City sidewalk makes it impossible for the access to meet ADA slope requirements and as such we have provided signs directing where ADA accessibility can be gained.

8. Related to the above, ensure that there are no stairs or other accessibility barricades within the areas of the buildings that are open to the public.

   No stairs will be constructed within the building areas. All stairs are only along the access to the Forest Avenue side, where there is too steep of access for continuous sloped walks.

9. The applicant should conduct sight distance analysis (both stopping sight distance and intersection sight distance) to the west of the site entrance driveway. There is concern that a left-turning entering motorist may not be able to detect a Forest Avenue eastbound vehicle, particularly if there is a bus in the relocated bus stop.

Sight distance was measured at the proposed entrance drive location to verify adequate sight distance for both vehicles turning left into the site and vehicles travelling thru on Route 302 EB. Sight distance was found to be over 400', which exceeds both the MaineDOT entrance guidelines as well as the AASHTO values for stopping sight distance. (See Photos if necessary).

City Arborist - Jeff Tarling:

In review of the proposed 1884 Forest Avenue project we offer the following recommendations and conditions of approval:

a) **Street Trees** - Forest Avenue edge; The current landscape plan offers little in the way of tree & landscape treatment along Forest Avenue in front of the mixed use building where it is needed the most. We can work with the project team to suggest trees and landscape or they can revisit and submit an updated plan. Improving the Forest Avenue streetscape with additional trees / landscape should be a condition of approval.

This includes the Mixed use building and the 'bump out' near the convenience store.

The issue with installing street trees along the street frontage relates to the presence of many utility services. We have revised the drawings to place more landscaping along the frontages and along the eastern side of the retail building and entrance. Also, there is little space between the sidewalk and street side walk for the retail building. We have attached a revised landscaping plan attempting to address the landscape concerns where we can without utility conflict.

Additional Trees & Landscape -
Within the project site we noticed a few more areas that we would like to see trees and landscape to meet the parking lot.

We have added where possible more landscaping especially on islands.

Landscape standards:

a) The include the 'bump out' to the right of the mixed use retail parking space, shown as snow storage and SEED MIX 'A", while snow storage is needed the value of landscape exceeds snow storage or finding a compromise of tree and landscape that can take some winter snow loading as we see in similar sites.

We have removed the snow storage area and will utilize the rear long side to store snow, and in certain cases removal will include contracted off site removal. We have added addition trees and landscaping in the area described.

b) the property boarder near the fueling station shown as 'Snow storage' should have a planting of 2 taller, upright shade trees or 5 Arborvitae directly below the fuel island, the future added height will help screen the canopy lights and glare.

We a very limited area for snow storage and this one area we would request to leave open, and is in vicinity of an access point for the Portland Housing Authority maintenance access. There are still mature pines that are located along the butting side of the fence to screen. The rest of the rear fence line is aligned with arborvitaes.

c) Convenience store boarder - the property line along the southerly edge of the site should have some degree of landscape and or wood fencing to provide buffering on that side of the project. The adjacent site next door could see future changes and the back side of a convenience store should have some screening both from the northbound traffic on Forest Avenue and the next door property. We can suggest options such as fencing with perhaps similar Arborvitae planting in groups vs. a continuous line.

We have shown a stockade fence along the rear of the sore and side line to the abutter to the south, and to also help screen the store side form passing traffic going northward.

Tree Sizes - the proposed 3" caliper tree sizes are larger than the city standard and we feel that 2-2.5" caliper size would be easier transplanted and add some economy to the planting budget, the evergreen plantings White Pine could be 7-8' height vs. the 10-12' height, the Arborvitae could be 6-7' height vs. the proposed 3" caliper.

Our landscape architects feel that the mature trees will provide a higher percentage of survival rate, and provide more immediate screening and presence, and overall usefulness, rather than the next standard size smaller as suggested.

The applicant is hopeful to complete the permitting process through the City by the early autumn of 2019, such they can enlist bids by later fall, for early winter through spring project commencement, and completion within one year. We look forward to working with the City and Planning/Engineering staff through the final plan permitting process for the proposed Pine State Family Mart. As always, please contact me if you have any questions or require further information.

Sincerely,
SEBAGO TECHNICS, INC.

Jim Seymour, P.E.
Senior Project Manager

JRS/jrs

enc.

cc: J. Chau

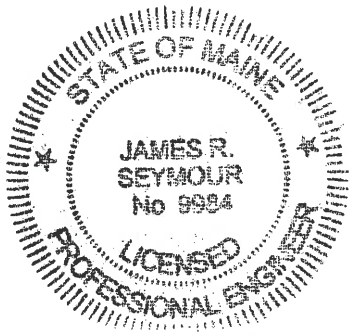

December 2, 2019
11142

City of Portland Planning Department
Shukria Wiar, Planner
389 Congress Street, 4th Floor
Portland, Maine 04101

Revisions and Responses to Review Comments-Level III Site Plan Application Submittal
Applicant: Pine State Family Mart c/o Mr. John Chau
1884 Forest Avenue, Tax Reference: 327-B-3

Dear Ms Wiar:

On behalf of Mr. John Chau, we have assembled the following revised site, grading and utility, and landscape plan for the Level III Site Submittal for the mixed-use retail space and convenience store/gas station located at 1884 Forest Avenue.

Following your last final comments received from the City dated November 21, 2019 regarding some clarification of various parking, ADA accessibility, and sidewalk provisions have been revised. Please see below to our responses:

Design review comments – Caitlin Cameron:

1. We have matched building drawings with site plans to address concerns about access to public sidewalks along the street frontage with forest Avenue. We have revised the sidewalk to have direct access from Forest Avenue, but due to limited space and slopes presented to make ADA accessibility work the sidewalk main approach is approximately center with the Mixed-use building. From there we installed a sidewalk along entry and building length that faces Forest Ave. and then connect to the Parking lot side via a 7-foot sidewalk. Due to spacing a 6-foot sidewalk is all that we could fit along the front parallel to the street sidewalk. Additionally, we showed the new pedestrian/sidewalk access from the building to the Forest Ave. street sidewalk for the Gas Station/convenience mart.

Public Services Mike Tremblay, PE and Bruce Hyman:

1. We corrected the not about the bus shelter to correct the dimensions of the concrete pad and shelter itself. We added the note the owner will construct the pad

as part of the project. Metro will be responsible for power utilities and the actual shelter design.

2. We have modified the dumpster area and pushed the encloser back making for a cleaner accessible corner. Furthermore, the owner has reached verbal agreement with PHA for access for maintenance and emergency access. We have left a 12-foot-wide access in the curb and sidewalk at the gated area. The sidewalk around the site from the mixed-use building would use this as part of the internal pedestrian access from one building to the other.

3. We relocated the spaces by the air pump and the air pumping mechanism to allow 6-foot clearance, and modified the spacing appropriately. We prefer the van spacing as proposed for the site, and with the changes we feel this is les of an issue in conjunction with the sidewalks.

4. The ADA pavement marking and stalls have been marked on the drawing and we will address the signs for applicable access routing internally.

Traffic Responses:

All response comments received from traffic review appear to be internal communications and the final verdict from what we discerned, is still being reviewed between the departments. We will ask if there are offsite improvements, how will these be entertained? Will we be making a contribution, will it be coming form impact fees, or will this be in combination to all the above. Substantial costs could be incurred with these offsite improvements requested that could be hundred of thousands of dollars in added costs.

The applicant is hopeful to complete the permitting process through the City by the end of 2019, such they can enlist bids by later winter, for a spring project commencement, and completion within one year. We look forward to working with the City and Planning/Engineering staff through the final plan permitting process for the proposed Pine State Family Mart. As always, please contact me if you have any questions or require further information.

Sincerely,
SEBAGO TECHNICS, INC.



James R. Seymour, P.E.
Senior Project Manager

JRS/jrs
enc.
cc: J. Chau

SEBAGO TECHNICS

September 10, 2018
11142

City of Portland Planning Board
Mr. Sean Dundon, Chair
389 Congress Street, 4th Floor
Portland, Maine 04101

Level III Site Plan Application Submittal – Pine State Family Mart
1884 Forest Avenue, Tax Reference: 327-B-3

Dear Planning Board Members:

On behalf of Mr. John Chau, we have assembled the following Level III Site Plan Submittal for a new development consisting of two buildings providing mixed use retail space and convenience store/gas station located at 1884 Forest Avenue. The project is to be known as Pine State Family Mart. We have appreciated the opportunity to correspond with the City on multiple occasions during the initial phases of the project and permitting process. Over the past few months, the applicant has continued the planning and design of the facility and would like to move forward with the City Planning Board review process. In parallel with the City Site Plan Review, the City is also reviewing a MDOT Traffic Movement Permit under the provisions of delegated review.

The following narrative provides an overview of the project team and design/facility components.

Project Team:

Applicant:	John Chau
Record owners:	John Chau and Phuong Neang (JT)
Architect:	Ryan Senatore Architecture
Civil, Traffic Engineers, Survey:	Sebago Technics, Inc.

Project Site:

The project site is located in the City of Portland's Riverton section and is bounded by Forest Avenue to the north, Riverton Drive to the west and residential developments to the south and east. The project frontage is on Forest Avenue (Route 302) and will be accessed by drives on Forest Avenue and Riverton Drive. This location is opportune for the project given its size and B-2 Community Business Zoning. The project site is approximately 1.61 acres in size and has access to Forest Avenue and Riverton Drive. The site is partially wooded, flat and does not contain wetland or other waterbodies.

Development Program:
The development program includes construction of two new drives from Forest Avenue and access via Riverton Drive. The site design provides off-street parking for employees and patrons. The one-story retail building is 7,800 square-foot +/- and the convenience store will be 5,000 square feet +/- with four fueling islands. Additionally, the site will include a dedicated snow storage area and a subsurface under-drained soil filter for stormwater management. In total the disturbed area for development area is approximately 1.6 acres. Other site improvements associated with the site development include a new bus stop shelter, bicycle parking and trash receptacle at the existing bus stop located along the lot frontage at Forest Avenue. STI has been coordinating the bus shelter with traffic engineers, Gorrill-Palmer functioning as the liaison with Greater Portland Metro. The entries are curbed and designed in conformance with City standards. Two sidewalk easements are proposed as part of the site development and the descriptions and sketches are enclosed in this site plan review application.

State and Federal Permits:
The project will require a Maine Department of Transportation (MDOT) Traffic Movement Permit (TMP). The application will be submitted to the City for delegated review concurrently this application. No other State or Federal permits are required as part of the site development.

Utilities:
The project will be served by public water and sewer available from mains located in Forest Avenue. We have been in contact with Portland Water District and the City Sewer Department regarding the proposed site development. Electrical and communication services are available and will be coordinated with respective companies.

Lighting:
The project has been designed with patron safety and consideration of abutting residential uses. Swaney Lighting provided the enclosed Photometrics Plan and LED light cut sheets for proposed wall packs, sconces, pole-mounted and ceiling mount fixtures.

Landscaping:
The project development will require removal of all of the vegetation on the site. The site will be revegetated in accordance with the City regulations. Neighboring residential uses are buffered and all landscaping plant locations, types and sizes are shown on the enclosed Landscape Plan.

Stormwater Management and Erosion Control:
A stormwater management plan has been prepared to include treatment of runoff to meet Maine DEP and City of Portland requirements. Stormwater from the developed area will be treated through a subsurface under-drained soil filter.

Traffic:
Sebago Technics, Inc. has completed and will be submitting a MDOT Traffic Movement Permit Application to the City of Portland for delegated review.

Schedule:
The applicant is hopeful to complete the permitting process through the City and MDOT by the autumn of 2018 for winter/spring project commencement and completion within one year.

Closure:
We look forward to working with the City and Planning/Engineering staff through the permitting process for the proposed Pine State Family Mart. As always, please contact me if you have any questions or require further information.

Sincerely,
SEBAGO TECHNICS, INC.

Jim Seymour, P.E.
Senior Project Manager

JRS/skn

enc.

cc: J. Chau

27: Availability and Adequacy of Public Utilities (14-526 (c) 3)
Technical Manual, Sections 2 & 9

- Electrical services, including providing underground services

  Electrical service extend underground. See Grading and Utility Plan.

- Identify existing and proposed connections for public utilities and required public utility upgrades

  See enclosed plan set.

- Sewer line connections are required, if there is a main within 200 feet

  Each of the proposed buildings will connect individually to the existing sewer stubs extending from Forest Avenue. See Plan Set for locations and design specifics. The proposed sanitary sewer and stormwater utilities are designed to City standards in Sections 2 and 4, Chapter 500 Stormwater Management Standards of the Technical Manual.

- Proposed solid waste management facilities on-site and management for the site

  Solid waste disposal for the proposed new facility will be provided by contract with a licensed private waste hauler. A dumpster and enclosure is included in the site design and is shown on the plan set. Our best estimate would be that the site would generate 1lb/day /100SF thereby the site would generate approximately 12800/100x 1x 31 days/mo= 3968 lbs /mo or approximately 2 tons/month.

  Constrcution debris will be disposed of by the contarcors at a licensed facility.

  Any stumps or grubbing from the site will be ground on-site by a portable stump grinder and used as mulch in the stabilization of back slopes and for erosion control. The grinding must be completed within a 30-day time period if a DEP permit has not been obtained. Material that has been ground and is not being used on-site must be hauled off-site within a time-period of 30 days from the end of the grinding process by a licensed Non-Hazardous Waste Transporter.

- Written evidence of the ability to serve from utility companies, as applicable

  Utility ability/capacity confirmation has been solicited from respective utility companies. Responses will be provided to the City upon receipt. See Portland Water District inquiry and City of Portland Wastewater Capacity Application, this section.

CITY OF PORTLAND WASTEWATER CAPACITY APPLICATION

Department of Public Services,
55 Portland Street,
Portland, Maine 04101-2991

Date: 09/10/2018

Bradley Roland, P.E.
Water Resources Division

1. Please, Submit Utility, Site, and Locus Plans.

Site Address: 1884 Forest Avenue

Chart Block Lot Number: 327-B-3

Proposed Use: Retail, Convenience Store/Gas Station
Previous Use: n/a
Existing Sanitary Flows: n/a GPD
Existing Process Flows: n/a GPD
Description and location of City sewer that is to receive the proposed building sewer lateral.

Site Category

Commercial *(see part 4 below)*	
Industrial *(complete part 5 below)*	
Governmental	
Residential	
Other *(specify)* Retail	X

Clearly, indicate the proposed connections, on the submitted plans.

2. Please, Submit Contact Information.

City Planner's Name: Barbara Barhydt Phone: (207) 874-8699
Owner/Developer Name: John Chau (Project name: Pine State Family Mart)
Owner/Developer Address: 75 Arcadia Street, Portland, ME 04103
Phone: (207)761-0858 Fax: E-mail: jchau059@gmail.com
Engineering Consultant Name: James Seymour, P.E., Sebago Technics, Inc.
Engineering Consultant Address: 75A John Roberts Road, Suite 4A
Phone: (207) 200-2115 Fax: (207) 856-2206 E-mail: jseymour@sebagotechnics.com
shanf@sebagotechnics.com

Note: Consultants and Developers should allow +/- 15 days, for capacity status, prior to Planning Board Review.

3. Please, Submit Domestic Wastewater Design Flow Calculations.

Estimated Domestic Wastewater Flow Generated: 2,786 GPD
Peaking Factor/ Peak Times:
Specify the source of design guidelines: *(i.e.* X *"Handbook of Subsurface Wastewater Disposal in Maine,"* __ *"Plumbers and Pipe Fitters Calculation Manual,"* __ *Portland Water District Records, Other (specify)*

Note: Please submit calculations showing the derivation of your design flows, either on the following page, in the space provided, or attached, as a separate sheet.

4. Please, Submit External Grease Interceptor Calculations.

Total Drainage Fixture Unit (DFU) Values: n/a

Size of External Grease Interceptor: _____

Retention Time: _____

Peaking Factor/ Peak Times: _____

Note: In determining your restaurant process water flows, and the size of your external grease interceptor, please use The Uniform Plumbing Code. Note: In determining the retention time, sixty (60) minutes is the minimum retention time. Note: Please submit detailed calculations showing the derivation of your restaurant process water design flows, and please submit detailed calculations showing the derivation of the size of your external grease interceptor, either in the space provided below, or attached, as a separate sheet.

5. Please, Submit Industrial Process Wastewater Flow Calculations

Estimated Industrial Process Wastewater Flows Generated: n/a GPD

Do you currently hold Federal or State discharge permits? Yes ____ No ____

Is the process wastewater termed categorical under CFR 40? Yes ____ No ____

OSHA Standard Industrial Code (SIC): *(http://www.osha.gov/oshstats/sicser.html)*

Peaking Factor/Peak Process Times: _____

Note: On the submitted plans, please show where the building's domestic sanitary sewer laterals, as well as the building's industrial-commercial process wastewater sewer laterals exits the facility. Also, show where these building sewer laterals enter the city's sewer. Finally, show the location of the wet wells, control manholes, or other access points; and, the locations of filters, strainers, or grease traps.

Note: Please submit detailed calculations showing the derivation of your design flows, either in the space provided, or attached, as a separate sheet.

Neighborhood Meeting Certification

I, John Chau certify that a neighborhood meeting was held on January 3, 2019 at the Riverton Elementary School Community Room, 1600 Forest Avenue, Portland at 6 P.M. for the proposed new mixed-use retail building and convenience store/gas station project to be known as Pine State Family Mart located at 1884 Forest Avenue, Portland.

I also certify that on December 12, 2018 more than 10 days prior to the meeting, invitations were mailed to the following:

1. All addresses on the mailing lists provided by the Planning Division which includes property owners within 500 Feet of the proposed development or within 1,000 feet of a subdivision within an industrial zone or industrial zone change.

2. Residents on the "interested parties" list.

Sincerely,

John Chau, Applicant

Attached to this certification are:

1. Copy of invitation
2. Sign-in Sheet
3. Meeting minutes

Neighborhood Meeting Minutes

A neighborhood meeting was held on January 3, 2019 at the Riverton Elementary School Community Room, 1600 Forest Avenue, Portland at 6 P.M. for the proposed new mixed-use retail building and convenience store/gas station project to be known as Pine State Family Mart located at 1884 Forest Avenue, Portland.

Minutes:

Initially there were only 5 in attendance for the meeting starting at 6PM, and no one had questions or comments as they were all affiliated with the owner, or representing Mr. Chau. We waited until 615 to start and comments, and with none we started to pick up.

At approximately 630 PM, Mr. Adam Mack appeared as the meeting was closing. He had no opposition to the project, and asked if the design could take into account some screening or fence placement near the dumpster location to account for headlights from vehicles that may be turning within the parking lot, such they will not impact abutters in his development Wellesley Estates whom have windows on that side facing the proposed development.

We discussed that is something we would consider with the owner.

No other attendees appeared. The meeting adjourned at 635

Sincerely,

James R. Seymour, Sr Project Manager-
Sebago Technics !nc

NEIGHBORHOOD MEETING SIGN-IN

11142

Proposed New Mixed-Use Retail and Convenience Store/Gas Station
PINE STATE FAMILY MART

Date/Time of Meeting: January 3, 2018, 6 P.M.

Location: Riverton Elementary School Community Room
1600 Forest Avenue, Portland

Members of the Public in Attendance	
Printed Name	**E-mail**
1. Ryan Senatore	ryan@senatoarchitects.com
2. Phakdey Ang	Phakdeyang92@gmail.com
3. John Chau	Jchau059@Gmail.com
4. Pheap Neang	- none -
5.	
6. Adam Mack	~~For~~ wellesleyEstates
7. James Seymour	jseymour@sebagotechnics.com
8.	
9.	
10.	
11.	
12.	
Developer and Consultant Team in Attendance:	
1.	
2.	
3.	
4.	
5.	
6.	
7.	

28: Massing, Ventilations and Wind Impact (14-526(d) 1)

- Wind and ventilation impacts on adjoining structures and/or adjacent public spaces. Windy study, if applicable

  Not applicable.

- Bulk, location or height impacts on adjoining structures
- Identify and located HVAC equipment and venting away from public spaces and residential properties
- Identify screening and manufacturing specifications for noise, if applicable

  Not applicable.

a. The bulk and height of the proposed buildings will not result in health or safety problems due to reduction in ventilation to abutting structures. Please see the site plan.

b. The bulk, location, and height of the proposed buildings will not minimize the value or utility to neighboring structures. The proposed development is consistent with other neighborhood properties and is an allowed use in the district. Refer to the plan set.

c. The HVAC venting mechanisms have not been formally sited or sized. The venting system will be constructed in accordance with the requirements of this section requiring that they be directed away from public spaces.

Portland, Maine — Yes. Life's good here.

Planning & Urban Development Department

LEVEL II and LEVEL III APPLICATION SUBMISSION CHECKLIST

Please submit each document as a separate PDF file.
Please confirm by electronically checking the boxes to the left

General Application Documents

Checklist	Items to be Provided	
Yes ✔ NA Plan	PROJECT DESCRIPTION • Cover Letter with detailed project description	01
Yes ✔ NA Plan	COMPLETED CHECKLIST – LEVEL III APPLICATION	02
Yes ✔ NA Plan	RIGHT, TITLE AND INTEREST • Deeds, leases, or purchase and sales agreements	03
Yes ✔ NA Plan	EVIDENCE OF STATE OR FEDERAL APPROVALS, if applicable • Permits or letters of non-jurisdiction, if applicable	04
Yes ✔ NA Plan ✔	ZONING ASSESSMENT • Table listing required and proposed uses and dimensional standards Zoning Assessment Table	05
Yes ✔ NA Plan	EXISTING &/OR PROPOSED EASEMENTS OR COVENANTS, if applicable • Evidence of existing easements and any proposed easements	06
Yes NA ✔ Plan	WAIVER REQUESTS • Written request for waiver describing request and reason. Waiver Table	07
Yes ✔ NA Plan	FINANCIAL CAPABILITY • Letter or evidence from a financial institution or third party verifying financial capacity to undertake project	08
Yes ✔ NA Plan	TECHNICAL CAPABILITY • Evidence of technical capability of applicant and consultants – resumes and/or examples of past projects	09

LEVEL II AND LEVEL III SITE PLAN STANDARDS AND SUBMISSION CHECKLIST

Provide assessment of compliance with standards and include supplemental documentation, as applicable.

Please submit each document as a separate PDF file.

TRANSPORTATION

Check list	Assess/Provide/Document:	
Yes NA Plan ✔ ✔	**Transportation Analysis- Traffic Impact (14-526 (a) 1)** • Provisions for pedestrian, bicycle, vehicle, and loading circulation and incremental volume of traffic impacts • Traffic Impact Study (Technical Manual, Section 1) if applicable	10
Yes NA Plan ✔ ✔	**Access and Circulation (14-526 (a) 2 a)** • Access and internal circulation, addressing ADA access • Access and egress impacts on traffic flows • Description and use of drive-up features, if applicable	11
Yes NA Plan ✔	**Loading and Servicing (14-526 (a) 2 b)** • Loading and servicing needs, route and travel way geometrics for deliveries • Turning templates for delivery vehicles, if applicable	12
Yes NA Plan ✔ ✔	**Sidewalks (14-526 (a) 2 c)** • Sidewalks and condition along street frontages and internal walkways • Engineered details for ADA ramps and public sidewalk details meeting sidewalk materials policy and ADA ramp construction details as applicable (Technical Manual, Section 1)	13
Yes NA Plan ✔	**Public Transit (14-526 (a) 3), if applicable** • Existing available transit services • Proposed site plan design details, such as easement, pad base, and shelter	14
Yes NA Plan ✔ ✔	**Off-Street Parking: Vehicle & Motorcycle/Scooter) (14-526 (a) 4 a and c)** • Expected parking demand, proposed parking supply, ADA parking, and applicable Zoning Requirements • Address Technical Manual standards (Section 1) for curb cut separation and parking lot layout and locate on site plan	15
Yes NA Plan ✔ ✔	**Bicycle Parking (14-526 (a) 4 b)** • Address bicycle parking requirements and identify locations on-site • Construction details for bike racks (Technical Manual, Section 1)	16
Yes NA Plan ✔ ✔	**Snow Storage (14-526 (a) 4 d)** • Management plan for snow removal and locate snow storage areas on plan	17
Yes NA Plan ✔	**Traffic Demand Management (TDM) (14-526 (a) 5), if applicable** • Develop TDM with Trip Reduction Targets and Strategies	18

ENVIRONMENTAL AND LANDSCAPE FEATURES	
Check list	Assess/Provide/Document:
Yes NA Plan ✔	Preservation of Significant Natural Features (14-526 (b) 1), if applicable 19 • Trees, plants, habitats listed on State or Federal list of endangered or threatened • High and moderate value waterfowl and wading habitat • Aquifers on Casco Bay Islands • Waterbodies (including wetlands, watercourses, significant vernal pools and floodplains) • Proposed preservation areas and protection measures • Documentation from environmental consultants, determinations from applicable state agencies
Yes NA Plan ✔	Landscaping and Landscape Preservation (14-526 (b) 2 a) • Preservation of trees and preservation within required zoning setbacks (Technical Manual, Section 4) • Protection measures of existing vegetation during construction 20 • Protection measures within Shoreland Zone, if applicable
Yes NA Plan ✔ ✔	Site Landscaping (14-526 (b) 2 b) 21 • Screening and buffering of service areas and between non-residential and residential uses • Planting plans with plant schedule and sizes (Technical Manual, Section 4)
Yes NA Plan ✔	Parking Lot Landscaping (14-526 (b) 2 b ii), if applicable 22 • Landscaped islands within parking areas (Technical Manual, Section 4)
Yes NA Plan ✔ ✔	Street Trees (14-526 (b) 2 b iii) 23 • Existing Heritage or Feature Trees on site and measures to preserve • Identify street trees on the plan meeting the site plan and Technical Manual standards (Section 4) or identify alternative measures, if applicable

ENVIRONMENTAL AND STORMWATER	
Check list	Assess/Provide/Document:
Yes NA Plan ✔ ✔	Water Quality, Stormwater Management and Erosion Control (14-526 (b) 3 a) 24 • Stormwater report in compliance with Section 5 of Technical Manual and DEP Chapter 500 stormwater for basic, general and flooding standards, as applicable • Erosion control plan and measures • Evidence of compliance with Urban Impaired Stream Standards pursuant to DEP Chapter 500 stormwater, as applicable • Subsurface sanitary sewage disposal and groundwater protection

PUBLIC INFRASTRUCTURE AND SAFETY	
Check list	Assess/Provide/Document:
Yes NA Plan ✔	**Consistency with City Master Plans (14-526 (c) 1)** 25 • Identify consistency with master plans • Proposed easements, rights and improvements to connect or continue off-premises public infrastructure, as applicable
Yes NA Plan ✔	**Public Safety and Fire Prevention (14-526 (c))** 26 • Address Crime Prevention through Environmental Design (CPTED) (Technical Manual, Section 3) • Emergency vehicle access • Address consistency with public safety standards (Technical Manual, Section 3) • Submit a code summary referring NFPA 1 and all Fire Department standards (Technical Manual, Section 3) – Fire Checklist
Yes NA Plan ✔ ✔	**Availability and Adequacy of Public Utilities (14-526 (c) 3) (Technical Manual, Sections 2 & 9)** 27 • Electrical services, including providing underground services • Identify existing and proposed connections for public utilities and required public utility upgrades • Sewer line connections are required, if there is a main within 200 feet • Proposed solid waste management facilities on-site and management for the site • Written evidence of the ability to serve from utility companies, as applicable

SITE DESIGN	
Check list	Assess/Provide/Document:
Yes NA Plan ✔	**Massing, Ventilations and Wind Impact (14-526 (d) 1)** 28 • Wind and ventilation impacts on adjoining structures and/or adjacent public spaces. Wind study, if applicable • Bulk, location or height impacts on adjoining structures • Identify and locate HVAC equipment and venting away from public spaces and residential properties • Identify screening and manufacturing specifications for noise, if applicable
Yes NA Plan ✔	**Shadows (14-526 (d) 2), if applicable** 29 • Shadow analysis of impacts on publicly accessible open space (Technical Manual, Section 11)
Yes NA Plan ✔	**Snow and Ice Loading (14-526 (d) 3)** 30 • Building design to prevent snow and ice from loading or falling onto adjacent properties or public ways
Yes NA Plan ✔	**View Corridors (14-526 (d) 4), if applicable** 31 • Protection of designated view corridors (Portland Design Manual, Appendix 1)

Yes NA Plan ☐ ✔ ☐	Historic Resources (14-526 (d) 5), if applicable • Identify developments within Historic Districts or affecting Designated Landmarks • Certificate of Appropriateness or other evidence • Identify Developments within 100 feet of Historic Districts or affecting Designated Landmarks. Advisory HP review may be required • Address preservation and documentation of Archaeological Resources	32
Yes NA Plan ✔ ☐ ✔	Exterior Lighting (14-526 (d) 6) • Cut sheets of on-site light fixtures and any architectural or specialty lights (Technical Manual, Section 12) • Engineered details for any lights proposed in street right-of-way (Technical Manual, Section 10)	33
Yes NA Plan ✔ ☐ ☐	Noise and Vibration (14-526 (d) 7) • Evidence of noise levels for equipment, such as equipment specifications, to demonstrate consistency with zoning requirements	34
Yes NA Plan ☐ ☐ ✔	Signage and Wayfinding (14-526 (d) 8), if applicable • Signage plan showing the location, dimensions, height and setback of all existing and proposed signs. Signs in Historic Districts are reviewed by Historic Preservation staff • Proposed commercial and directional signage on site	35
Yes NA Plan ☐ ✔ ☐	Zone Related Design Standards (14-526 (d) 5) • Address Historic Preservation Design Review, if applicable • Address any applicable design review standards by zone • Address submission requirements from Design Manual, page 1, addressing neighborhood context • Description of exterior materials, color, finish, and samples	36
Construction Management Plan		
Check list		
Yes NA Plan ✔ ☐ ✔	Construction Management Plan • Construction Management Document and Plan	37

Level II and Level III Site Plan Checklist

Please upload the following drawings with the listed details into e-Plan as separate pdfs.

☐ **RECENT BOUNDARY SURVEY** (stamped by Maine Licensed Surveyor)

Must be in compliance with Technical Manual, Section 13

SITE PLAN(s) (stamped by Maine Licensed Engineer) including:

☑ **Existing Conditions**

- Approximate location of structures on abutting property
- Topography
- Locate water courses
- Delineate wetlands
- Zone lines

☑ **Proposed Site Plan**

- Ground floor area, and grade elevations for all buildings

☑ **Access, Circulation, and Parking**

- Streets and intersections adjacent to site , any proposed geometric modifications
- Location, dimensions and materials of all existing and proposed driveways, vehicle, bicycle, & pedestrian access ways with corresponding curb lines
- Engineered specifications/ cross-sections for proposed driveways, sidewalks & paved areas
- Location and dimensions of proposed loading areas
- Existing and proposed transit infrastructure with dimensions/ engineering specifications
- Location of vehicle and bicycle parking with dimensions and engineering specifications

☑ **Site Considerations**

- Identify snow storage areas
- Location of fire hydrants
- Location of solid waste management facilities

☑ **UTILITY PLAN** including:

- Existing utilities on site and within public streets
- Location, sizing, and directional flows of all existing and proposed utilities
- Location and dimensions of off-premises public or publicly accessible infrastructure adjacent to site
- Electric utility infrastructure

☑ GRADING and DRAINAGE PLAN including:
• Existing grades and drainage • Proposed grades • Proposed stormwater management meeting Technical Manual (Section 5) standards • Location and proposed alteration of a water course • Preservation or alteration of wetlands
☑ EROSION CONTROL
• Must be in compliance with Technical Manual, Section 5
☑ LANDSCAPE PLAN including:
• Existing vegetation to be preserved and preservation measures • Proposed landscaping and buffers • Planting schedule
☐ RECORDING PLAT, if applicable
• IF SUBDIVISION: Must be in compliance with requirements of Section 14-496 (b)
☑ ARCHITECTURAL PLANS & RENDERINGS including:
• Exterior building elevations, color renderings, illustrations of all sides • Location and dimensions of all existing & proposed HVAC & mechanical equipment, all proposed screening • Provide context drawings, if applicable (Design Manual, page 1) • Floor plans

Level III – Preliminary and Final Site Plans
Development Review Application
Portland, Maine

Planning and Urban Development Department
Planning Division

Portland's Planning and Urban Development Department coordinates the development review process for site plan, subdivision and other applications under the City's Land Use Code. Attached is the application form for a Level III: Preliminary or Final Site Plan. Please note that Portland has delegated review from the State of Maine for reviews under the Site Location of Development Act, Chapter 500 Stormwater Permits, and Traffic Movement Permits.

Level III: Site Plan Development includes:

- New structures with a total floor area of 10,000 sq. ft. or more except in Industrial Zones.
- New structures with a total floor area of 20,000 sq. ft. or more in Industrial Zones.
- New temporary or permanent parking area(s) or paving of existing unpaved parking areas for more than 75 vehicles.
- Building addition(s) with a total floor area of 10,000 sq. ft. or more (cumulatively within a 3 year period) except in Industrial Zones.
- Building addition(s) with a total floor area of 20,000 sq. ft. or more in Industrial Zones.
- A change in the use of a total floor area of 20,000 sq. ft. or more in any existing building (cumulatively within a 3 year period).
- Multiple family development (3 or more dwelling units) or the addition of any additional dwelling unit if subject to subdivision review.
- Any new major or minor auto business in the B-2 or B-5 Zone, or the construction of any new major or minor auto business greater than 10,000 sq. ft. of building area in any other permitted zone.
- Correctional prerelease facilities.
- Park improvements: New structures greater than 10,000 sq. ft. and/or facilities encompassing 20,000 sq. ft. or more (excludes rehabilitation or replacement of existing facilities); new nighttime outdoor lighting of sports, athletic or recreation facilities not previously illuminated.
- Land disturbance of 3 acres or more (includes stripping, grading, grubbing, filling or excavation).

Portland's development review process and requirements are outlined in the Land Use Code (Chapter 14), Design Manual and Technical Manual.

Planning Division
Fourth Floor, City Hall
389 Congress Street
(207) 874-8719
planning@portlandmaine.gov

Office Hours
Monday thru Friday
8:00 a.m. – 4:30 p.m.

I. Project Information (Please enter n/a on those fields that are not applicable)

Project Name:	Pine State Family Mart
Proposed Development Address:	1884 Forest Avenue, Portland, Maine
Project Description:	Retail space, convenience store/gas station - 2 Buildings
Chart/Block/Lot:	327-B-3
Preliminary Plan	
Final Plan	

II. Contact Information (Please enter n/a on those fields that are not applicable)

APPLICANT

Name:	John Chau
Business Name:	
Address:	75 Arcadia Street
City/State:	Portland, ME
Zip Code:	04103
Work #:	
Home #:	(207) 761-0858
Cell #:	
Fax #:	
E-mail:	Jchau059@gmail.com

OWNER

Name:	John Chau and Phuong Neang (JT)
Address:	75 Arcadia Street
City/State:	Portland, ME
Zip Code:	04103
Work #:	
Home #:	(207) 761-0858
Cell #:	
Fax #:	
E-mail:	Jchau059@gmail.com

AGENT/REPRESENTATIVE

Name:	James Seymour, P.E., Sebago Technics, Inc.
Address:	75 John Roberts Road, Suite 4A
City/State:	South Portland, ME
Zip Code:	04106
Work #:	(207) 200-2083
Home #:	
Cell #:	
Fax #:	(207) 856-2206
E-mail:	jseymour@sebagotechnics.com

BILLING (to whom invoices will be forwarded to)

Name:	John Chau
Address:	75 Arcadia Street
City/State:	Portland, ME
Zip Code:	04103
Work #:	
Home #:	(207) 761-0858
Cell #:	
Fax #:	
E-mail:	Jchau059@gmail.com

ENGINEER

Name:	James Seymour, P.E., Sebago Technics, Inc.
Address:	75 John Roberts Road, Suite 4A
City/State:	South Portland, ME
Zip Code:	04106
Work #:	(207) 200-2075
Home #:	
Cell #:	
Fax #:	(207) 856-2083
E-mail:	jseymour@sebagotechnics.com

SURVEYOR

Name:	Charlie Marchese, Sebago Technics, Inc.
Address:	75 John Roberts Road, Suite 4A
City/State:	South Portland, ME
Zip Code:	04106
Work #:	(207) 200-2069
Home #:	
Cell #:	
Fax #:	(207) 856-2206
E-mail:	cmarchese@sebagotechnics.com

ARCHITECT

Name:	Ryan Senatore Architecture
Address:	535 Congress Street, #304
City/State:	Portland, Maine
Zip Code:	04101
Work #:	(207) 747-5159
Home #:	
Cell #:	
Fax #:	
E-mail:	ryan@senatorearchitecture.com

ATTORNEY

Name:	N/A
Address:	
City/State:	
Zip Code:	
Work #:	
Home #:	
Cell #:	
Fax #:	
E-mail:	

DESIGNATED PERSON(S) FOR UPLOADING INTO e-PLAN

Name:	Stefanie Nichols
E-mail:	snichols@sebagotechnics.com
Name:	Rebecca Gabryszewki
E-mail:	rgabryszewski@sebagotechnics.com
Name:	Sarah Hanf
E-mail:	shanf@sebagotechnics.com

III. APPLICATION FEES

LEVEL III DEVELOPMENT (check applicable review)

☐	Less than 50,000 sq. ft.	$750.00
☑	50,000 – 100,000 sq. ft.	$1,000.00
☐	100,000 – 200,000 sq. ft.	$2,000.00
☐	200,000 – 300,000 sq. ft.	$3,000.00
☐	Over 300,000 sq. ft.	$5,000.00
☐	Parking lots over 100 spaces	$1,000.00
☐	After-the-fact Review	$1,000.00 + applicable application fee above

PLAN AMENDMENTS (check applicable review)

☐	Planning Staff Review	$250.00
☐	Planning Board Review	$500.00

OTHER REVIEWS (check applicable review)

☑	Traffic Movement	$1,500.00
☑	Stormwater Quality	$250.00
☐	Subdivision	$500.00 + applicable fee for lots/units below
	# of Subdivision Lots/Units [ ] x $25.00 each	$
☐	Site Location	$3,500.00 + applicable fee for lots/units below
	# of Site Location Lots/Units [ ] x $200.00 each	$
☐	Change of Use	
☐	Flood Plain	
☐	Shoreland	
☐	Design Review	
☐	Housing Replacement	
☐	Historic Preservation	
	TOTAL APPLICATION FEE DUE:	$ 2,750.00

IV. FEES ASSESSED AND INVOICED SEPARATELY

- Notices to abutters (receipt of application, workshop and public hearing meetings) ($.75 each)
- Legal Ad in the Newspaper (% of total ad)
- Planning Review ($52.00 hour)
- Legal Review ($75.00 hour)
- Third Party Review (all outside reviews or analysis, eg. Traffic/Peer Engineer, are the responsibility of the applicant and will be assessed and billed separately)

V. PROJECT DATA (Please enter n/a on those fields that are not applicable)

TOTAL AREA OF SITE	72,350	sq. ft.
PROPOSED DISTURBED AREA OF THE SITE	69,326	sq. ft.
If the proposed disturbance is greater than one acre, then the applicant shall apply for a Maine Construction General Permit (MCGP) with DEP and a Stormwater Management Permit, Chapter 500, with the City of Portland.		
IMPERVIOUS SURFACE AREA		
Impervious Area (Total Existing)	443	sq. ft.
Impervious Area (Total Proposed)	48703	sq. ft.
Building Ground Floor Area and Total Floor		
Building Footprint (Total Existing)	0	sq. ft.
Building Footprint (Total Proposed)	12,800	sq. ft.
Building Floor Area (Total Existing)	0	sq. ft.
Building Floor Area (Total Proposed)	12,800	sq. ft.
ZONING		
Existing	B-2	
Proposed, if applicable		
LAND USE		
Existing	Unimproved	
Proposed	Retail & Convenience Store/Gas	
RESIDENTIAL, IF APPLICABLE		
# of Residential Units (Total Existing)	n/a	
# of Residential Units (Total Proposed)	n/a	
# of Lots (Total Proposed)	n/a	
# of Affordable Housing Units (Total Proposed)	n/a	
PROPOSED BEDROOM MIX		
# of Efficiency Units (Total Proposed)	n/a	
# of One-Bedroom Units (Total Proposed)	n/a	
# of Two-Bedroom Units (Total Proposed)	n/a	
# of Three-Bedroom Units (Total Proposed)	n/a	
PARKING SPACES		
# of Parking Spaces (Total Existing)	0	
# of Parking Spaces (Total Proposed)	48	
# of Handicapped Spaces (Total Proposed)	4	
BICYCLE PARKING SPACES		
# of Bicycle Spaces (Total Existing)	0	
# of Bicycle Spaces (Total Proposed)	10	
ESTIMATED COST OF THE PROJECT	$3,500,000.00	

VI. APPLICANT SIGNATURE

By digitally signing the attached document(s), you are signifying your understanding this is a legal document and your electronic signature is considered a ***legal signature*** per Maine state law.

I hereby certify that I am the Owner of record of the named property, or that the owner of record authorizes the proposed work and that I have been authorized by the owner to make this application as his/her authorized agent. I agree to conform to all applicable laws of this jurisdiction. In addition, if a permit for work described in this application is issued, I certify that the Planning Authority and Code Enforcement's authorized representative shall have the authority to enter all areas covered by this permit at any reasonable hour to enforce the provisions of the codes applicable to this permit.

This application is for a Level III Site Plan review. It is not a permit to begin construction. An approved site plan, a Performance Guarantee, Inspection Fee, Building Permit, and associated fees will be required prior to construction. Other Federal, State or local permits may be required prior to construction, which are the responsibility of the applicant to obtain.

Signature of Applicant:	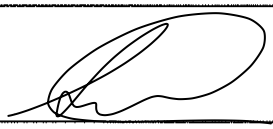
Date:	August 28, 2018

PRELIMINARY PLAN (Optional) - Level III Site Plan			
Applicant Checklist	Planner Checklist	# of Copies	**GENERAL WRITTEN SUBMISSIONS CHECKLIST**
		1	Completed Application form
		1	Application fees
		1	Written description of project
		1	Evidence of right, title and interest
		1	Evidence of state and/or federal approvals, if applicable
		1	Written assessment of proposed project's compliance with applicable zoning requirements
		1	Summary of existing and/or proposed easement, covenants, public or private rights-of-way, or other burdens on the site
		1	Written requests for waivers from site plan or technical standards, if applicable.
		1	Evidence of financial and technical capacity
		1	Traffic Analysis (may be preliminary, in nature, during the preliminary plan phase)
Applicant Checklist	Planner Checklist	# of Copies	**SITE PLAN SUBMISSIONS CHECKLIST**
		1	Boundary Survey meeting the requirements of Section 13 of the City of Portland's Technical Manual
		1	**Preliminary Site Plan including the following: (information provided may be preliminary in nature during preliminary plan phase)**
		Proposed grading and contours;	
		Existing structures with distances from property line;	
		Proposed site layout and dimensions for all proposed structures (including piers, docks or wharves in Shoreland Zone), paved areas, and pedestrian and vehicle access ways;	
		Preliminary design of proposed stormwater management system in accordance with Section 5 of the Technical Manual (note that Portland has a separate applicability section);	
		Preliminary infrastructure improvements;	
		Preliminary Landscape Plan in accordance with Section 4 of the Technical Manual;	
		Location of significant natural features (including wetlands, ponds, watercourses, floodplains, significant wildlife habitats and fisheries or other important natural features) located on the site as defined in Section 14-526 (b) (1);	
		Proposed buffers and preservation measures for significant natural features, as defined in Section 14-526 (b) (1);	
		Location , dimensions and ownership of easements, public or private rights of way, both existing and proposed;	
		Exterior building elevations.	

FINAL PLAN - Level III Site Plan			
Applicant Checklist	Planner Checklist	# of Copies	**GENERAL WRITTEN SUBMISSIONS CHECKLIST (* If applicant chooses to submit a Preliminary Plan, then the * items were submitted for that phase and only updates are required)**
		1	* Completed Application form
		1	* Application fees
		1	* Written description of project
		1	* Evidence of right, title and interest
		1	* Evidence of state and/or federal permits
		1	* Written assessment of proposed project's specific compliance with applicable Zoning requirements
		1	* Summary of existing and/or proposed easements, covenants, public or private rights-of-way, or other burdens on the site
		1	* Evidence of financial and technical capacity
		1	Construction Management Plan
		1	A traffic study and other applicable transportation plans in accordance with Section 1 of the technical Manual, where applicable.
		1	Written summary of significant natural features located on the site (Section 14-526 (b) (a))
		1	Stormwater management plan and stormwater calculations
		1	Written summary of project's consistency with related city master plans
		1	Evidence of utility capacity to serve
		1	Written summary of solid waste generation and proposed management of solid waste
		1	A code summary referencing NFPA 1 and all Fire Department technical standards
		1	Where applicable, an assessment of the development's consistency with any applicable design standards contained in Section 14-526 and in City of Portland Design Manual
		1	Manufacturer's verification that all proposed HVAC and manufacturing equipment meets applicable state and federal emissions requirements.

Applicant Checklist	Planner Checklist	# of Copies	**SITE PLAN SUBMISSIONS CHECKLIST** **(* If applicant chooses to submit a Preliminary Plan, then the * items were submitted for that phase and only updates are required)**
		1	* Boundary Survey meeting the requirements of Section 13 of the City of Portland's Technical Manual
		1	**Final Site Plans including the following:**
		Existing and proposed structures, as applicable, and distance from property line (including location of proposed piers, docks or wharves if in Shoreland Zone);	
		Existing and proposed structures on parcels abutting site;	
		All streets and intersections adjacent to the site and any proposed geometric modifications to those streets or intersections;	
		Location, dimensions and materials of all existing and proposed driveways, vehicle and pedestrian access ways, and bicycle access ways, with corresponding curb lines;	
		Engineered construction specifications and cross-sectional drawings for all proposed driveways, paved areas, sidewalks;	
		Location and dimensions of all proposed loading areas including turning templates for applicable design delivery vehicles;	
		Existing and proposed public transit infrastructure with applicable dimensions and engineering specifications;	
		Location of existing and proposed vehicle and bicycle parking spaces with applicable dimensional and engineering information;	
		Location of all snow storage areas and/or a snow removal plan;	
		A traffic control plan as detailed in Section 1 of the Technical Manual;	
		Proposed buffers and preservation measures for significant natural features, where applicable, as defined in Section 14-526(b)(1);	
		Location and proposed alteration to any watercourse;	
		A delineation of wetlands boundaries prepared by a qualified professional as detailed in Section 8 of the Technical Manual;	
		Proposed buffers and preservation measures for wetlands;	
		Existing soil conditions and location of test pits and test borings;	
		Existing vegetation to be preserved, proposed site landscaping, screening and proposed street trees, as applicable;	
		A stormwater management and drainage plan, in accordance with Section 5 of the Technical Manual;	
		Grading plan;	
		Ground water protection measures;	
		Existing and proposed sewer mains and connections;	

- Continued on next page -

		Location of all existing and proposed fire hydrants and a life safety plan in accordance with Section 3 of the Technical Manual;
		Location, sizing, and directional flows of all existing and proposed utilities within the project site and on all abutting streets;
		Location and dimensions of off-premises public or publicly accessible infrastructure immediately adjacent to the site;
		Location and size of all on site solid waste receptacles, including on site storage containers for recyclable materials for any commercial or industrial property;
		Plans showing the location, ground floor area, floor plans and grade elevations for all buildings;
		A shadow analysis as described in Section 11 of the Technical Manual, if applicable;
		A note on the plan identifying the Historic Preservation designation and a copy of the Application for Certificate of Appropriateness, if applicable, as specified in Section Article IX, the Historic Preservation Ordinance;
		Location and dimensions of all existing and proposed HVAC and mechanical equipment and all proposed screening, where applicable;
		An exterior lighting plan in accordance with Section 12 of the Technical Manual;
		A signage plan showing the location, dimensions, height and setback of all existing and proposed signs;
		Location, dimensions and ownership of easements, public or private rights of way, both existing and proposed.

A Guide to Holding Neighborhood Meetings
Portland, Maine

Planning and Urban Development Department
Planning Division and Planning Board

In order to improve communication between applicants and neighbors, the City of Portland requires applicants who are proposing certain types of development review projects, to hold a neighborhood meeting.

Developments requiring a neighborhood meeting

- Proposed map amendments, contract zones and zoning text amendments that would result in major development;
- Subdivisions of five or more units or lots;
- Master Development Plans; and
- Level III site plan proposals as defined in Section 14-523.

(The Land Use Code, including Article II (Planning Board) and Article V (Site Plan – which contains the neighborhood meeting requirements), are available on the City's web site at www.portlandmaine.gov/citycode/chapter014.pdf)

Timing of meeting

- **Subdivisions of 5 or more units or lots, zone changes, contract zones, zoning text amendments and Level III site plans:**
  - Preliminary Site Plan - The meeting should be held within 30 calendar days of filing the application.
  - Final Site Plan – If only a final plan is submitted, the meeting should be held within 21 calendar days of filing the application and no less than 7 calendar days before the public hearing.
- **Master Plan Development:**
  - The meeting should be held within 30 calendar days of filing the application.
  - The meeting should be held on a date no less than 7 calendar days before a public workshop or public hearing.
  - The meeting shall not be combined with any required neighborhood meeting for the Level III applications.

Location of meeting

- The meeting should be held in the evening, during the week, at a convenient location within the Portland neighborhood surrounding the proposed site. Community meeting spaces at libraries, schools or other places of assembly are recommended. Neighborhood schools are usually available for evening meetings.
- Meetings should not be held on the same day as scheduled Planning Board or City Council meetings. The City Council generally meets on the 1st and 3rd Monday of each month and the Planning Board generally meets on the 2nd and 4th Tuesday of each month; however additional meetings may be scheduled. An updated schedule may be found on the City's website: www.portlandmaine.gov

Invitation List

- Property owners within 500 feet of the proposed development (1000 feet for proposed industrial subdivisions and industrial zone changes)
- Interested citizens and neighborhood groups.

The Planning Division provides the mailing labels. We require at least 48 hours notice to generate the mailing labels and a charge of $1.00 per sheet will be payable upon receipt of the labels. An electronic version (excel or word format) of the labels can also be e-mailed upon request.

A digital copy of the notice must be provided to the Planning Office (jmy@portlandmaine.gov and ldobson@portlandmaine.gov) and the assigned planner, which will then be forwarded to those on the interested citizen list who receive e-mail notices.

When to Send Invitations

- Invitations must be sent **no less than 10 days (to include weekends)** prior to the neighborhood meeting.
- Notices may be sent by regular mail and do not need to be sent by certified mail.

Notice Description

A recommended invitation format is included in this packet of material.

Attendance Sheet and Meeting Minutes

- Sign-in sheet must be circulated for those in attendance.
- Applicant shall take accurate minutes of the meeting.
- The sign-in sheet and minutes shall be submitted to the Planning Division.

A public hearing will not be scheduled until the meeting minutes and sign-up sheet are submitted to the Planning Division.

A Certification form is included with this packet to be completed and signed by the applicant.

Please call the Planning Division at 874-8721 or 874-8719 if you have any questions.

Attachments

1. Neighborhood Meeting Invitation Format
2. Neighborhood Meeting Certification

EXAMPLE: Neighborhood Meeting Invitation Format

Applicant/Consultant
Letterhead

(Date)

Dear Neighbor:

Please join us for a neighborhood meeting to discuss our plans for a (development proposal) located at (location/number and street address).

Meeting Location: _____
Meeting Date: _____
Meeting Time: _____

(The City code requires that property owners within 500 feet (1000 feet for proposed industrial subdivisions and industrial zone changes) of the proposed development and residents on an "interested parties list", be invited to participate in a neighborhood meeting. A sign-in sheet will be circulated and minutes of the meeting will be taken. Both the sign-in sheet and minutes will be submitted to the Planning Board.)

If you have any questions, please call (telephone number of applicant or consultant).

Sincerely,

(Applicant)

Note:
Under Section 14-32(C) and 14-524(a)d of the City Code of Ordinances, an applicant for a Level III development, subdivision of over five lots/units, or zone change is required to hold a neighborhood meeting within 30 days of submitting a preliminary application or 21 days of submitting a final site plan application, if a preliminary plans was not submitted. The neighborhood meeting must be held at least seven days prior to the Planning Board public hearing on the proposal. Should you wish to offer additional comments on this proposed development, you may contact the Planning Division at 874-8721 or send written correspondence to the Planning and Urban Development Department, Planning Division 4th Floor, 389 Congress Street Portland, ME 04101 or by email: to bab@portlandmaine.gov

EXAMPLE: Neighborhood Meeting Certification

I, (applicant/consultant) hereby certify that a neighborhood meeting was held on (date) at (location) at (time).

I also certify that on (date at least ten (10) days prior to the neighborhood meeting), invitations were mailed to the following:

1. All addresses on the mailing list provided by the Planning Division which includes property owners within 500 feet of the proposed development or within 1000 feet of a proposed industrial subdivision or industrial zone change.

2. Residents on the "interested parties" list.

3. A digital copy of the notice was also provided to the Planning Division (jmy@portlandmaine.gov and ldobson@portlandmaine.gov) and the assigned planner to be forwarded to those on the interested citizen list who receive e-mail notices.

Signed,

_____ _____ (date)

Attached to this certification are:

1. Copy of the invitation sent
2. Sign-in sheet
3. Meeting minutes

29: Shadows (14-526 9d), if applicable

- Shadow analysis of impacts on publicly accessible open space (Technical Manual, Section 11)

  Not applicable. There are no publicly accessible open spaces areas adjacent to the property.

03: Right, Title, Interest

The record owners are John Chau and Phuong Neang (JT) by deed 26148/266 recorded at the Cumberland County Registry of Deeds (CCRD). The parcel is identified by the City of Portland Assessor as 327-3-B. A copy of the referenced deed is included in this section.

11142

Doc#: 33674 Bk:26148 Ps: 266 DEED.

WARRANTY DEED
(Maine Statutory Short Form)

KNOW ALL BY THESE PRESENTS, that **OLD OCEAN HOUSE BUILDERS LLC**, a Maine limited liability company with a principal place of business in Cape Elizabeth, Maine, for consideration paid, GRANTS TO **JOHN CHAU** and **PHUONG NEANG**, whose mailing address is 75 Acadia Street, Portland Maine, with WARRANTY COVENANTS, AS JOINT TENANTS AND NOT AS TENANTS IN COMMON, the land in the City of Portland, Maine, described as follows:

A CERTAIN lot or parcel of land with any buildings thereon situated on the southwesterly side of Forest Avenue, in the City of Portland, County of Cumberland and State of Maine, bounded and described as follows:

BEGINNING AT an iron on the southwesterly sideline of Forest Avenue at the northwest corner of the lot of land conveyed by the City of Portland to the Presumpscot Grange by deed dated August 21, 1947 and recorded in the Cumberland County Registry of Deeds in Book 1871, Page 406;

Thence by said Presumpscot Grange land South 29 degrees 23 1/2' West one hundred sixty-seven and eighteen hundredths (167.18) feet to a concrete monument and land of Arthur Hawkes;

Thence by said Hawkes' land and land of Arthur Serunian North 66 degrees 40' West one hundred fifty-seven and seventy-seven hundredths (157.77) feet to an iron;

Thence by said Serunian land North 47 degrees 01' West two hundred ninety-five and twenty-one hundredths (295.21) feet to a stone monument;

Thence continuing by said Serunian land North 45 degrees 51 1/2' East one hundred sixty-eight and sixty-five hundredths (168.65) feet to an iron and the southwesterly sideline of Forest Avenue;

Thence by said Forest Avenue South 38 degrees 52' East one hundred fifty-five and thirty-nine hundredths (155.39) feet to a stake marking an angle point in said road, and continuing by Forest Avenue South 62 degrees 57' East two hundred fifty-one and eighty-nine hundredths (251.89) feet to the point of beginning.

Courses are magnetic and of the date of 1964.

Being the same premises described in a deed from Forest Avenue Associates dated January 28, 2008 and recorded in the Cumberland County Registry of Deeds in Book 25775, Page 152.

IN WITNESS WHEREOF, the undersigned has caused this instrument to be signed and sealed on June 20, 2008.

OLD OCEAN HOUSE BUILDERS LLC

Witness

by: _____
Patrick A. Tinsman, its Manager

State of Maine
County of Cumberland, ss.
2008

June 20, 2008

Then personally appeared before me the above-named Patrick A. Tinsman in his said capacity and acknowledged the foregoing to be his free act and deed and the free act and deed of said limited liability company.

Before me,

_____
Notary Public/Attorney-at-Law
Printed Name: Lauren R. Clough

Warranty Deed 1884 Forest Ave.DOC
6/16/2008

Received
Recorded Register of Deeds
Jun 23,2008 02:00:47P
Cumberland County
Pamela E. Lovley

04: State and Federal Permits

The proposed site development requires a Traffic Movement Permit (TMP) Application. The permit application will be submitted concurrently with the Site Plan Application for delegated review by the City of Portland.

30: Snow and Ice Loading (14-526 (d) 3)

- Building design to prevent snow and ice from loading or falling onto adjacent properties or public ways

  The buildings are situated on the site to avoid significant amounts of accumulated snow and ice from loading or falling onto adjacent properties or public ways. See Site Plan for building location.

05: Zoning Assessment

The subject parcel is located within the B-2 Community Business Zone; and abuts an R-5 Residential zoning district. Two buildings will be constructed on site for mixed-use retail and the other building will be utilized as a convenience store/gas station.

In accordance with the dimensional requirements defined in Section 14-250 of the City of Portland Code of Ordinances, the proposed development meets or exceeds ordinance requirements. The required *Zoning Assessment Table* is included in this section and reference is made to the plan set for additional space and bulk information.

ZONING ANALYSIS Relevant Zone(s) B-2

All Projects:

	Required	Proposed
Lot Size	-	1.61 Acres +/-
Area Per Dwelling Unit	n/a	n/a
Minimum Street Frontage	20 feet	407.28 +/- feet
Front Yard Minimum	0 feet	10 feet
Front Yard Maximum	10 feet	10 feet
Rear Yard	10 feet	10 feet
Yard Right	0 feet	15 feet +/-
Yard Left	0 feet	21 feet +/-
Side Street Setback	n/a	n/a
Step Back	n/a	n/a
Maximum Lot Coverage	n/a	n/a
Minimum Lot Coverage	n/a	n/a
Maximum Height	45 feet	25'-8", 25'-6"
Open Space	n/a	n/a
Maximum Impervious Area	80%	67%
Pavement Setback		
Floor Area Ratio		
Off Street Parking Spaces	37	48
Loading Bays	-	0
Other 1		
Other 2		
Other 3		

Retail 25'-8", Conv. Store 25'-6"

Required:
Retail: 22
Convenience Store: 15

Planned Residential Unit Developments (PRUD) Requirements

	Required	Proposed
Minimum Lot Size	n/a	
Minimum Lot Area per Dwelling	n/a	
Maximum # Units per Building	n/a	
Maximum Building Length	n/a	
Maximum Accessory Building Length	n/a	
Minimum Setbacks	n/a	
Minimum Building Separation	n/a	
Minimum Open Space	n/a	

Affordable Housing Density Bonuses (if applicable)

	Bonus Increase or Decrease	Maximum Allowable With Bonus	Proposed
Density	n/a		
Height	n/a		
Setback Reduction	n/a		
Recreation Space	n/a		
Maximum Accessory Building Length	n/a		
Minimum Setbacks	n/a		
Minimum Building Separation	n/a		
Minimum Open Space	n/a		
Explanatory Text 1 (optional):			
Explanatory Text 2 (optional):			
Explanatory Text 3 (optional):			

31: View Corridors (14-526 (d)4)

- Protection of designated view corridors (Portland Design Manual, Appendix 1)

Not applicable. The site is not located in a designated view corridor.

06: Existing and/or Proposed Easements or Covenants

A. Existing Easements:

Per review of the deed, no existing easements or covenants are associated with the project site.

B. New Easements

Three new sidewalk easements are proposed as part of the site development.

A proposed pedestrian sidewalk easement will be created for the portion of sidewalk that will encroach into private property as a result of the proposed road/turning lane improvements. Per our discussions and agreements with METRO, a bus shelter will be added near the Forest Avenue entrance requiring an easement as well. Finally, as was originally proposed in 2012 with the previous approved site plan, we are offering an easement for the street encroachment at the intersection of Riverton Drive and Forest Avenue. See Exhibits 'A', 'B' & 'C' sketches, this section.

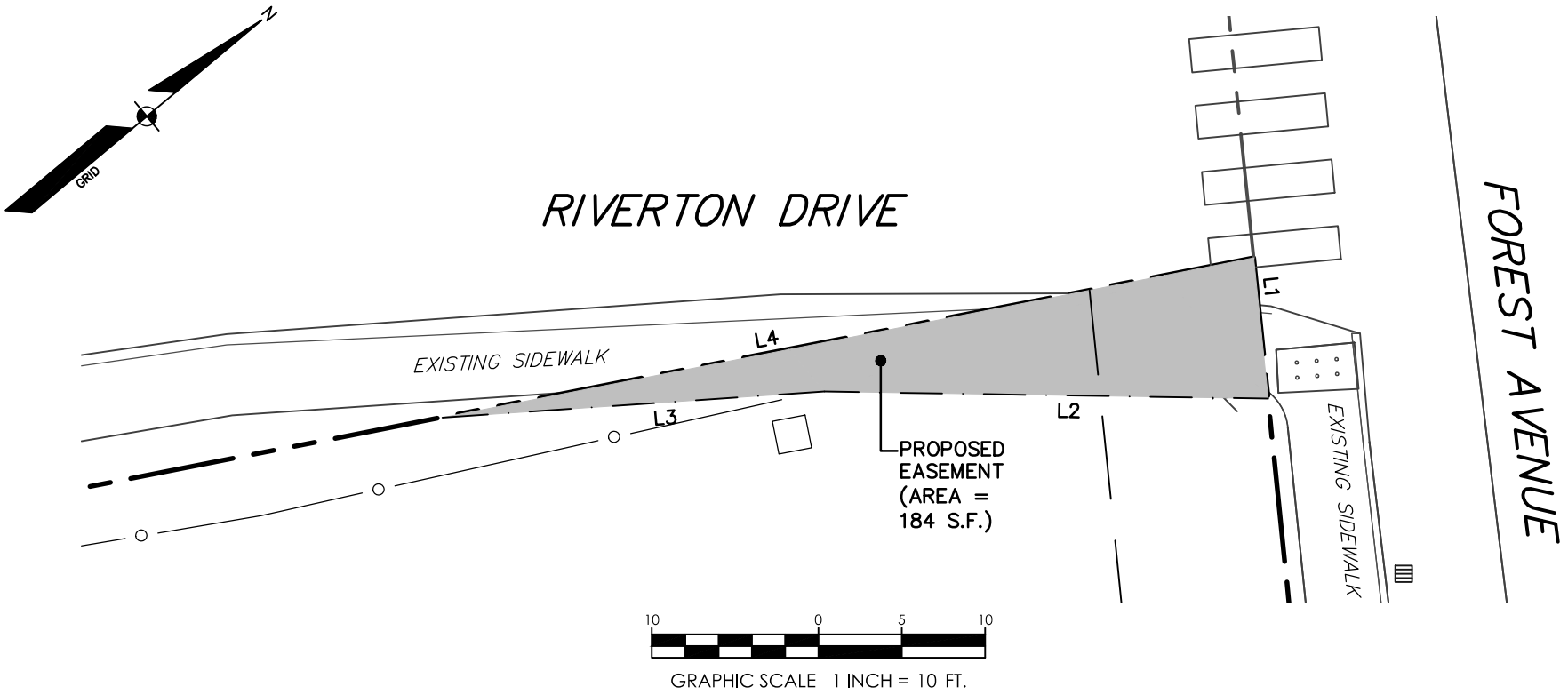

GENERAL NOTES:

1. THE RECORD OWNER OF THE LOCUS PARCEL IS JOHN CHAU AND PHUONG NEANG BY WARRANTY DEED DATED JUNE 20, 2008 AND RECORDED AT THE CUMBERLAND COUNTY REGISTRY OF DEEDS (CCRD) ON JUNE 23, 2008 IN BOOK 26148, PAGE 266.

2. THE PROPERTY IS SHOWN AS LOT 3, BLOCK B, ON THE CITY OF PORTLAND ASSESSORS MAP 327 AND IS LOCATED IN THE B-2 ZONE.

3. REFERENCE IS MADE TO PLANS ENTITLED "EXISTING CONDITIONS AND SITE PLAN OF PINE STATE FAMILY MART, 1884 FOREST AVE., PORTLAND, MAINE FOR JOHN CHAU" DATED SEPTEMBER 10, 2018, BY SEBAGO TECHNICS, INC.

EASEMENT LINE TABLE

LINE	DIRECTION	DISTANCE
L1	S 55°50'32" E	8.50'
L2	S 40°54'47" W	26.63'
L3	S 36°05'00" W	23.00'
L4	N 28°50'58" E	49.65'

SEBAGO TECHNICS
WWW.SEBAGOTECHNICS.COM
75 John Roberts Rd.
Suite 4A
South Portland, ME 04106
Tel. 207-200-2100

EXHIBIT 'A' SKETCH
OF PROPOSED SIDEWALK EASEMENT

SCALE: 1" = 10'
DATE: 09-11-18

LOCATION:
RIVERTON DRIVE/FOREST AVENUE
PORTLAND, MAINE

FOR:
PINE STATE FAMILY MART
1884 FOREST AVE., PORTLAND, MAINE

SHEET:
1 OF 3

11142S.dwg, TAB: EX1

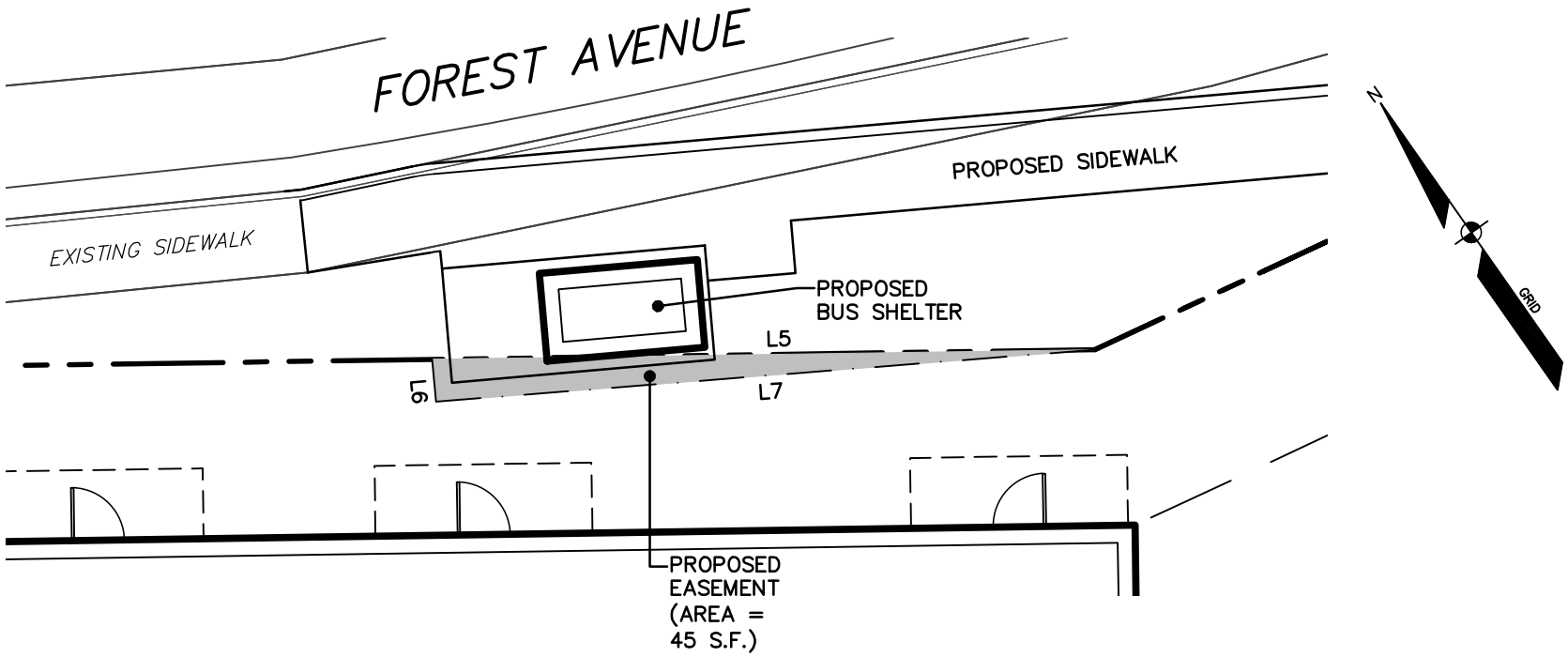

10 0 5 10

GRAPHIC SCALE 1 INCH = 10 FT.

GENERAL NOTES:

1. THE RECORD OWNER OF THE LOCUS PARCEL IS JOHN CHAU AND PHUONG NEANG BY WARRANTY DEED DATED JUNE 20, 2008 AND RECORDED AT THE CUMBERLAND COUNTY REGISTRY OF DEEDS (CCRD) ON JUNE 23, 2008 IN BOOK 26148, PAGE 266.

2. THE PROPERTY IS SHOWN AS LOT 3, BLOCK B, ON THE CITY OF PORTLAND ASSESSORS MAP 327 AND IS LOCATED IN THE B-2 ZONE.

3. REFERENCE IS MADE TO PLANS ENTITLED "EXISTING CONDITIONS AND SITE PLAN OF PINE STATE FAMILY MART, 1884 FOREST AVE., PORTLAND, MAINE FOR JOHN CHAU" DATED SEPTEMBER 10, 2018, BY SEBAGO TECHNICS, INC.

EASEMENT LINE TABLE

LINE	DIRECTION	DISTANCE
L5	N 55°50'32" W	37.68'
L6	S 30°00'00" W	2.41'
L7	S 59°30'29" E	37.58'

SEBAGO TECHNICS
WWW.SEBAGOTECHNICS.COM
75 John Roberts Rd.
Suite 4A
South Portland, ME 04106
Tel. 207-200-2100

EXHIBIT 'B' SKETCH
OF PROPOSED SIDEWALK EASEMENT

SCALE: 1" = 10'
DATE: 09-11-18

LOCATION:
RIVERTON DRIVE/FOREST AVENUE
PORTLAND, MAINE

FOR:
PINE STATE FAMILY MART
1884 FOREST AVE., PORTLAND, MAINE

SHEET:
2 OF 3

11142S.dwg, TAB: EX2

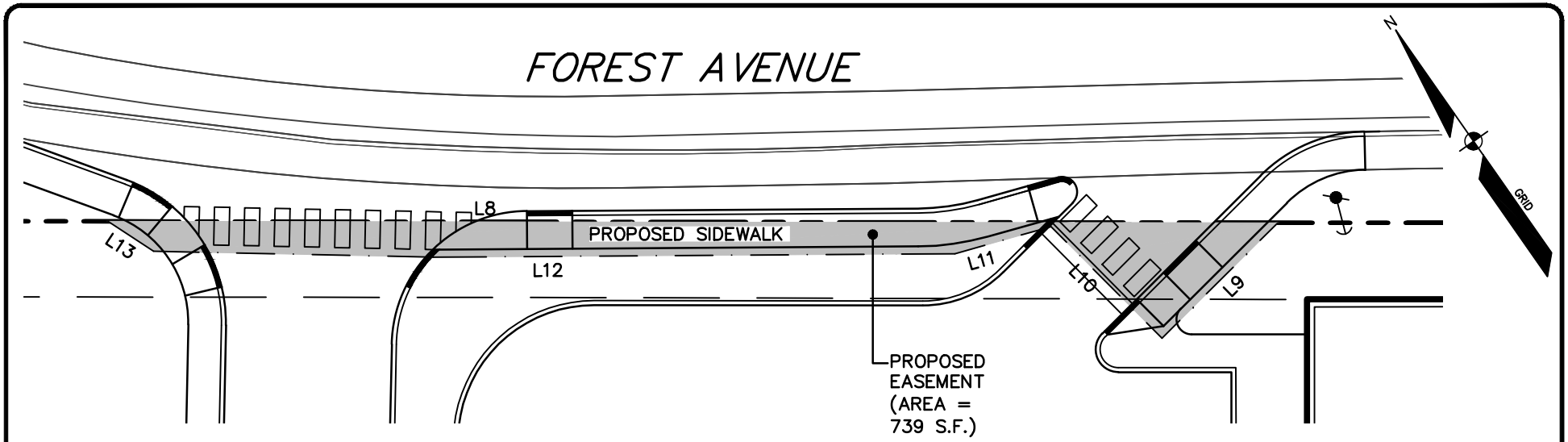

GENERAL NOTES:

1. THE RECORD OWNER OF THE LOCUS PARCEL IS JOHN CHAU AND PHUONG NEANG BY WARRANTY DEED DATED JUNE 20, 2008 AND RECORDED AT THE CUMBERLAND COUNTY REGISTRY OF DEEDS (CCRD) ON JUNE 23, 2008 IN BOOK 26148, PAGE 266.

2. THE PROPERTY IS SHOWN AS LOT 3, BLOCK B, ON THE CITY OF PORTLAND ASSESSORS MAP 327 AND IS LOCATED IN THE B-2 ZONE.

3. REFERENCE IS MADE TO PLANS ENTITLED "EXISTING CONDITIONS AND SITE PLAN OF PINE STATE FAMILY MART, 1884 FOREST AVE., PORTLAND, MAINE FOR JOHN CHAU" DATED SEPTEMBER 10, 2018, BY SEBAGO TECHNICS, INC.

EASEMENT LINE TABLE

LINE	DIRECTION	DISTANCE
L8	S 79°56'02" E	154.87'
L9	S 55°08'13" W	21.63'
L10	N 34°51'47" W	20.80'
L11	S 84°17'55" W	13.22'
L12	N 80°22'32" W	69.08'
L13	N 46°57'50" W	7.23'

SEBAGO TECHNICS
WWW.SEBAGOTECHNICS.COM
75 John Roberts Rd.
Suite 4A
South Portland, ME 04106
Tel. 207-200-2100

EXHIBIT 'C' SKETCH
OF PROPOSED SIDEWALK EASEMENT

SCALE: 1" = 20'
DATE: 09-11-18

LOCATION:
RIVERTON DRIVE/FOREST AVENUE
PORTLAND, MAINE

FOR:
PINE STATE FAMILY MART
1884 FOREST AVE., PORTLAND, MAINE

SHEET:
3 OF 3

11142S.dwg, TAB: EX3

32: Historic Resources (14-526(d) 5)

- Identify developments within Historic Districts or affecting Desginated Landmarks
- Certificate of Appropriateness or other evidence
- Identify Developments within 100 feet of Historic Districts of affecting Designated Landmarks. Advisory HP review may be required
- Address preservation and documentation of Archaelogical Resources

The proposed development is not located in a City Historic District and will not affect a Designated Landmark. Reference is made to Maine Historic Preservation Commission site review request for historic and archaeological features, this section. A copy of the response will be forwarded to the City upon receipt.

SEBAGO TECHNICS

CIVIL ENGINEERING • SURVEYING • LANDSCAPE ARCHITECTURE

August 28, 2018
11142

Mr. Kirk Mohney, State Historic Preservation Officer
Maine Historic Preservation Commission
State House Station 65
Augusta, Maine 04333

Re: Proposed Pine State Family Mart – 1884 Forest Avenue, Portland
Tax Parcel: 327-B-3
Record Owners: John Chau, Phuong Neang (JT)

Dear Mr. Mohney,

Sebago Technics, Inc. has been retained by Mr. John Chau for services related to the development of Pine State Family Mart on an unimproved property at 1884 Forest Avenue in the City of Portland. The site is 1.61± in size and will be developed by the addition of two buildings. The uses will consist of one mixed-use retail building ±7,800 square feet and a ±5,000 square foot convenience store with 4 fueling islands, access drive, parking, utilities, landscaping and other associated site improvements.

The site is currently wooded and is adjacent to residential uses (Riverton Park Family Apartments, Terrace Pond Apartments, Wellesley Estates Apartments) and is opposite Tortilla Flats restaurant and adjacent to a dance club/event center. Other site uses in the vicinity include a 7-Eleven convenience store/gas station and two automobile repair businesses. The site is located in B-2 Business Zone and the design and proposed uses are typical of, and consistent with outer Forest Avenue zoning and uses. The site is not located in a City historic district.

As part of the municipal site plan review respectfully request a site review by the Commission for the presence of any archaeological or historic sites within or adjacent to the project area determined in accordance with the provisions of the National Historic Preservation Act 36 CFR, Part 800, Section 106.

We have enclosed a site location map and aerial photograph for your reference. If you have any questions or require additional information please contact me at snichols@sebagotechnics.com or directly at (207) 200-2120.

Sincerely,
SEBAGO TECHNICS, INC.

Stefanie Nichols

Stefanie Nichols
Permitting Specialist/Project Coordinator

enc.

07: Waiver Requests

No waivers are requested.

33: Exterior Lighting (14-526 (d) 6)

- Cut sheets of on-site light fixtures and any architectural or specialty lights (Technical Manual, Section 12)
- Engineered details for any lights proposed in street right-of-way (Technical Manual, Section 10)

Light fixture cut sheets are included in this section. Lighting will be installed at building entrances along the building faces, as necessary, to provide illumination levels that are safe, comfortable and convenient. Light fixture cut sheets and a photometric plans prepared and provided by Swaney Lighting, this section. The site development abuts residential uses therefore shielding measures are incorporated into the lighting design.

ARCEOS™
ARS SERIES
SURFACE/CEILING/GARAGE

Cat.#

Job

Type

HUBBELL Outdoor Lighting

Approvals

SPECIFICATIONS

Intended Use:
Ceiling applications from eight to eighteen feet for surface, box or pendant mount. Applications include parking garage, walkway or building canopies, corridors, tunnels, large stairwells and other interior applications with ambient 40˚C. A wide range of lumen packages and optical distributions are available making the ARS Series luminaire both versatile and functional.

Construction:
- Die cast aluminum housing features vertical fins for two directional air flow that maximizes heat dissipation and ensures long electrical component life and luminaire performance
- LED light engines and electrical compartment are thermally isolated with an air gap for optimum component performance and long life
- One piece molded silicone gasket ensures weather proof seal around each individual LED; Stamped stainless steel bezel provides mechanical compression to seal the optical assembly; 18L and 24L luminaires include finish (color) matching blanking bezel
- IP65 luminaire rating
- Vandal resistant polycarbonate and low bright-ness acrylic shield accessories available

LED/Optics:
- Light engine is hexagonal LED module containing 6 high output LEDs with PMMA acrylic lenses that create precise photometric performance
- Choice of multiple light outputs based on quantity of hexagonal LED arrays: 3 = 18 LEDs, 4 = 24 LEDs or 6 = 36 LEDs hexagonal LED modules, lumen range 4,000-9,700
- Four distribution types: Type V Square (5M), Type V Rectangular (5R), Type V Wide (5W) or Type IV (4)
- Type V Rectangular (5R) lenses provides low brightness "drive aisle optics" solution for low mounting height applications when the lens is oriented perpendicular to the flow of traffic
- Variety of color temperatures offered: 3000K (70CRI), 4000K (70CRI) or 5000K (70 CRI) CCT
- Each hexagonal light engine comes with a connector for easy replacement

Electrical:
- 120V-277V 50/60Hz, 42-86 Watts 700mA configurations. Drivers RoHS compliant and IP66
- 0-10V dimming drivers. Up to 113 lumens per watt. Designed and certified for 40˚C ambient temperatures
- Thermal management protection device shuts driver/LED systems off when temperatures are too high. Operating temperature range -30˚C/-22˚F –40˚C/104˚F
- Surge protection – 20KA; Turns fixture off at end of life; Includes LED for end of life indication (see surge suppressor page 3)

Controls/Options:
- Occupancy Sensors, photocells controls available for on/off or dimming operation
- wiSCAPE in fixture wireless control module, features dimming, switching motion sensor
- Up light o ption available in 24L and 36L configurations

Installation:
Quick disconnect plate mounts over standard junction box and allows for simplified fixture installation. A 3/4" hub provides pendant stem mounting making the fixture adaptable to a variety of applications. Each mounting can be accomplished while maintaining a watertight seal. Four ½" conduit hubs allow side access as required. A pattern indicator on the mounting plate allows the installer to properly orient the fixture without energizing the light engines.

Listings:
Listed to UL 1598 for use in wet locations, 40˚ C ambient environments; Meets DesignLights Consortium (DLC) qualifications 4K & 5K models only, Consult DLC website for more details: http://www.designlights.org/QPL; IP65

Warranty:
Five year limited warranty (for more information visit: http://www.hubbelllighting.com/resources/warranty/

PRODUCT IMAGE(S)



Shown with motion control option

DIMENSIONS

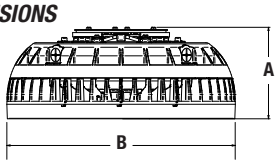

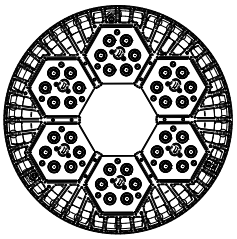

A	B	Weight:
5.68" (144.22 mm)	14.00" (355.6 mm)	18 lbs 8.16 kg

CARTON DIMENSIONS

Length	Width	Height
15.88"	15.88"	7.5"

CERTIFICATIONS/LISTINGS

C SP US

IP65

DLC QPL LISTED

*3000K and warmer CCTs only

ORDERING INFORMATION

ORDERING EXAMPLE: ARS-36L5K-070-5M-1-DB-PC

ARS - [ ] [ ] - [ ] - [ ] - [ ] - [ ] - [ ] - [ ] - [ ]

SERIES	NUMBER OF LEDS	LED COLOR	DRIVE CURRENT	IES DISTRIBUTION	VOLTAGE[2]
ARS Arceos™ surface/ceiling/garage luminaire	**18L** 18 LEDs **24L** 24 LEDs **36L** 36 LEDs	**3K** 3000K **4K** 4000K **5K** 5000K	**070** 700mA **083**[1] 833mA **105**[1] 1050mA	**5M** Type V Square **5R** Type V Rectangle **5W** Type V Wide **4** Type IV	**U** 120V-277V **1** 120V **2** 208V **3** 240V **4** 277V **F**[6] 347V **5**[6] 480V

FINISH	FINISH
DB Bronze	**FG** Forest Green (premium color)
BL Black	**RD** Red (premium color)
WH White	**CC** Custom Colors (Consult factory)
PS Platinum Silver	
GR Gray	

OPTIONS
F[2] Fusing (voltage specified and determined by voltage field)
UD Up light option, available in 24L and 36L only 700mA configuration only
LMB Less moutning bracket (must order mounting bracket accessory)
CS Comfort Shield
SPC Vandal Shield

CONTROL OPTIONS
WIR wiSCAPE, In-fixture wireless control module
WIRSC wiSCAPE, In-fixture wireless control module w/ occupancy sensor

CONTROL OPTIONS
PC[2] Photocontrol (must specify voltage not available in 480V)
SCP[2,3,5] High/low control - for up to 20' mounting heights user programmable settings
SCPW[2,3,5] High/low control - wide lens for up to 8' mounting heights

[1] 833mA only available in 18L, 1050mA only available with 24L, 120-277V only
[2] Specify voltage for voltage specific options
[3] 0-10V fully adjustable dimming with automatic daylight calibration and different time delay settings; Must order minimum of one SCP-REMOTE to program dimming settings
[4] One per LED module e.g. 3 – 18L, 4 – 24L, and 6 – 36L luminaires (see page 3)
[5] PC option not applicable, included in sensor. For SCP, PC function turns on to lower setting until motion is detected
[6] 24L and 36L 700mA configuration only, not available with UD or WIRSC options

See page 2 and 3 for Accessories.

© 2018 HUBBELL OUTDOOR LIGHTING, All Rights Reserved • For more information visit our website: **www.hubbelloutdoor.com** • Printed in USA

ACCESSORIES/REPLACEMENT PARTS - Order Separately

Catalog Number	Description
ARS-SPC[4]	Vandal shield (1 per LED module)
ARS-BS-XX*	Bird shield
ARS-CS[4]	Comfort shield - Reduces source brightness and imagining P95 acrylic with nominal 10% lumen reduction (1 per LED module)
ARS-MB-XX*	ARS mounting bracket for pre-installation of mounting bracket (accessory for LMB option)
SCP-REMOTE[3]	Remote control for SCP option; order at least on per project to program and control (not applicable for 347/480V)
SWUSB***	SiteSync interface software loaded on USB flash drive for use with owner supplied PC (Windows based only). Includes SiteSync license, software and USB radio bridge node.
SWTAB***	Windows tablet and SiteSync interface software. Includes tablet with preloaded software, SiteSync license and USB radio bridge node.
SWBRG+	SiteSync USB radio bridge node only. Order if a replacement is required or if an extra bridge node is requested.
93052458	20KA surge protection with an end of life LED indicator

*XX = Color Options: DB, BL, WH, PS and GR
** When ordering with SiteSync, one of the following interface options must be chosen an ordered separately. Each option contains the SiteSync License, GUI and Bridge Node.
*** When ordering SiteSync at least one of these two interface options must be ordered per project.
+ If needed, an additional Bridge Node can be ordered.

PHOTOMETRICS

Type V Rectangle
Drive Aisle Optic
ARS-36L5K-5R

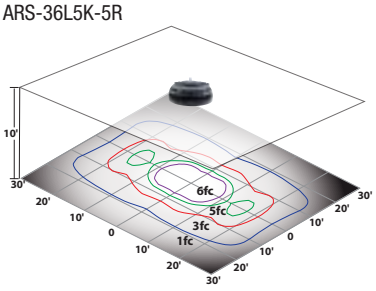

Type V Square – ARS-36L5K-5M

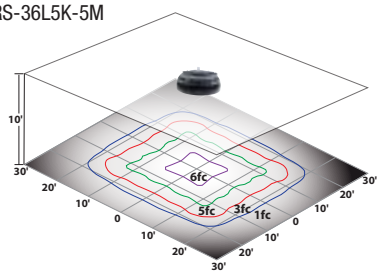

Type V Wide – ARS-36L5K-5W

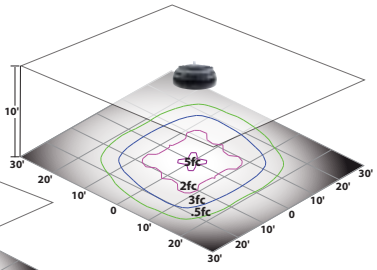

Type IV – ARS-36L5K-4

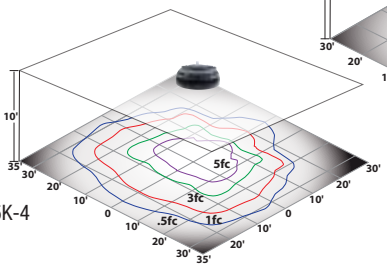

PERFORMANCE DATA

				5K (5000K nominal, 70 CRI)					4K (4000K nominal, 70 CRI)					3K (3000K nominal, 70 CRI)				
# LED'S	DRIVE CURRENT (MILLIAMPS)	SYSTEM WATTS	DISTRIBUTION TYPE	LUMENS	LPW[1]	B	U	G	LUMENS	LPW[1]	B	U	G	LUMENS	LPW[1]	B	U	G
18	700mA	42	5M	4551	109	2	0	1	4376	105	2	0	1	4026	97	2	0	0
			5R	4727	113	2	0	2	4511	108	2	0	2	4150	100	2	0	2
			5W	4517	108	3	0	1	4182	100	3	0	2	3847	92	3	0	1
	833mA	54	5M	5401	100	2	0	1	5024	93	2	0	1	4622	85	2	0	1
			5R	5541	102	3	0	3	5179	96	2	0	2	4765	88	2	0	2
			5W	5171	95	3	0	1	4881	90	3	0	2	4491	83	3	0	2
24	700mA	56	5M	6068	109	2	0	1	5835	105	3	0	1	5368	97	2	0	1
			5R	6303	113	3	0	3	6015	108	3	0	3	5534	100	3	0	3
			5W	6022	108	3	0	2	5576	100	3	2	3	5130	92	3	0	1
	1050mA	85	5M	7888	93	3	0	1	7586	89	3	0	1	6979	82	3	0	1
			5R	8194	97	3	0	3	7820	92	3	0	3	7194	85	3	0	3
			5W	7829	92	3	0	2	7249	85	3	0	2	6669	79	3	0	2
36	700mA	86	5M	9391	109	3	0	1	8695	101	3	0	1	7999	93	3	0	1
			5R	9741	113	3	0	3	8962	104	3	0	3	8245	96	3	0	3
			5W	9100	105	4	0	2	8427	98	3	0	2	7753	90	3	0	2

[1]Lumen values are from photometric tests performed in accordance with IESNA LM-79-08. Data is considered to be representative of the configurations shown. Actual performance may differ as a result of end-user environment and application.

ELECTRICAL DATA

# OF LEDS	NUMBER OF DRIVERS	DRIVE CURRENT (mA)	INPUT VOLTAGE (V)	SYSTEM POWER (w)	CURRENT (Amps)
18	1	700	120	41.7	0.35
			277		0.15
	1	833	120	54.2	0.45
			277		0.20
24	2	700	120	55.6	0.46
			277		0.20
			347		0.16
			480		0.12
	1	1050	120	84.8	0.71
			277		0.31
36	3	700	120	86.3	0.72
			277		0.31
			347		0.25
			480		0.18

LUMINAIRE AMBIENT TEMPERATURE FACTOR (LATF)

AMBIENT TEMPERATURE		LUMEN MULTIPLIER
0˚ C	32˚ F	1.02
10˚ C	50˚ F	1.01
20˚ C	68˚ F	1.00
25˚ C	77˚ F	1.00
30˚ C	86˚ F	1.00
40˚ C	104˚ F	0.99

Use these factors to determine relative lumen output for average ambient temperatures from 0-50°C (32-122°F).

© 2018 HUBBELL OUTDOOR LIGHTING, All Rights Reserved • For more information visit our website: **www.hubbelloutdoor.com** • Printed in USA

PROJECTED LUMEN MAINTENANCE

AMBIENT TEMP.	0	25,000	50,000	[1]TM-21-11 60,000	100,000	Calculated L70 (HOURS)
10°C / 50°F	1.01	1.00	0.99	0.99	0.97	>1,085,000
25°C / 77°F	1.00	0.99	0.98	0.98	0.96	>1,085,000
40°C / 104°F	0.97	0.96	0.96	0.95	0.94	>782,000

[1] Projected per IESNA TM-21-11 Data references the extrapolated performance projections for the **ARS-36LU-5K** base model in a 40°C ambient, based on 10,000 hours of LED testing per IESNA LM-80-08.

VERSATILE CONFIGURATIONS



ARS-18LU



ARS-24LU



ARS-36LU

MOUNTING OPTIONS & ACCESSORIES



Specially designed internal hook and hinge allows easy access to wiring and internal components for easy installation



Pendant mount with ¾" wiring hub; Bird shield accessory available; J-Box mounting slots and wire way accommodate 3 ½" and 4" J-Box designs



Four – ½" wiring hubs for surface conduit wiring and photocell option

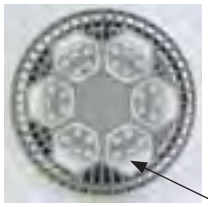

ARS-SPC - Clear vandal shield installs over each hexagonal LED bezel with 3 provided screws, specify quantity when ordering:

- 3 for 18L
- 4 for 24L
- 6 for 36L

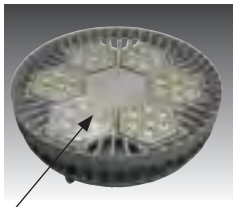

ARS-CS - Frosted comfort shield installs over each hexagonal LED bezel with 3 provided screws, improved uniformity and reduced LED brightness, specify quantity when ordering:

- 3 for 18L
- 4 for 24L
- 6 for 36L

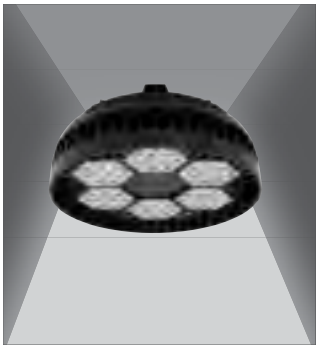

Optional up light feature provides approximately 300 lumens of ambient light reducing the "cave effect" in parking garage applications (available in 24L and 36L, 700mA versions only)

SURGE PROTECTION

- Field replaceable surge protection device (SPD) provides 20KA and 10KV protection meeting ANSI/IEEE C62.41.2 Category C High and Surge Location Category C3
- The SPD is designed with a clamping voltage of 1600V at 20KA using industry standard 8/20µs waveform
- Max surge current = 20,000 Amps (see table)
- LED Indicator – Green LED is unlit at end of life

Pulse Rating (8 x 20 µSec)	
Strikes	Surge
1	20,000 A
2	15,000 A
15	10,000 A
120	3,000 A

	cRUus	CE
I_n	10KA	5KA

© 2018 HUBBELL OUTDOOR LIGHTING, All Rights Reserved • For more information visit our website: **www.hubbelloutdoor.com** • Printed in USA

CIMARRON LED CL1S

Cat.#

Job

Type

HUBBELL Outdoor Lighting

Approvals

SPECIFICATIONS

Construction:
- Stylish vertically finned die-cast solid top housing for maximum heat dissipation; Stops collection of unsightly debris
- Rugged lower die-cast aluminum heat sink optimizes thermal management and optical performance
- One piece die-cut silicone gasket with mechanically compressed stainless steel bezel ensures weather proof seal around each individual LED for IP65 rating
- Backlight Control (BC) option available for 85% spill light reduction, doesn't change fixture appearance or EPA, recommended for Type III and Type IV distributions
- Weight - 19 pounds, EPA - .45 ft^2

Optics:
- Choice of 126 high brightness LED configurations with individual acrylic lenses specially designed for IES Type II, III, IV and V distributions
- 3000K, 80 CRI; 4000K, 70 CRI; 5000K, 67 CRI, Turtle friendly Amber

Electrical:
- Universal input voltage 120-277 VAC, **50/60 Hz**
- Ambient operating temperature -40˚ C to 40˚ C
- Drivers have greater than 90% power factor and less than 10% THD
- 700mA drive current standard, 350mA and 525mA options available with 32L and 48L LED models
- LED drivers have output power over-voltage, over-current protection and short circuit protection with auto recovery
- Surge protection – 20KA; Turns fixture off at end of life; Includes LED for end of life indication (see surge suppressor page 3)
- Optional 0-10VDC continuous dimming to 10%
- Automatic thermal self-protection
- LED electrical assembly, including PR devices, consumes no power in the 'off' state

Controls:
- Drivers are 0-10V dimming standard. Photocell and occupancy sensors available for complete on/off and dimming control

Installation:
- Quick-mount plate included for easy installation
- The decorative integral arm houses two stage hinge mechanism
- Safety latch holds luminaire door to prevent "free swing"
- Quick-connect wiring for simplified, hassle-free installation
- Suitable for applications requiring 3G testing prescribed by ANSI @136.31

Finish:
- TGIC thermoset polyester powder paint finish applied at nominal 2.5 mil thickness

Warranty:
Five year limited warranty, for more information visit:
http://www.hubbelloutdoor.com/resources/warranty/

Listings:
- Listed to UL1598 and CSA C22.2#250.0-24 for wet locations
- 700mA models meet DesignLights Consortium (DLC) qualifications, consult DLC website for more details: http://www.designlights.org/QPL
- IDA approved
- IP66

PRODUCT IMAGE(S)



48 LED 3/4 VIEW



16 LED



32 LED



48 LED

DIMENSIONS

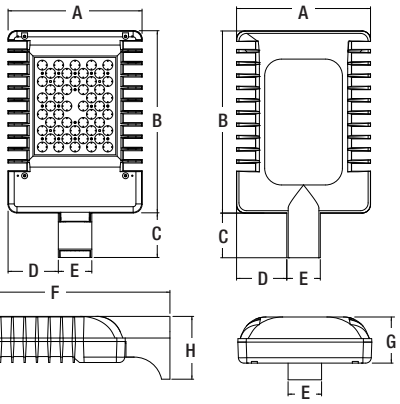

Weight

19 lbs.
8.62 kgs.

A	B	C	D	E	F	G	H
12"	16.312"	4"	4.5"	3"	20.312"	4.13"	5.625"
305mm	414mm	102mm	114mm	76mm	515mm	105mm	143mm

CERTIFICATIONS/LISTINGS

C SP US · IDA · LED lighting facts · DLC QPL LISTED

© 2018 HUBBELL OUTDOOR LIGHTING, All Rights Reserved • For more information visit our website: **www.hubbelloutdoor.com** • Printed in USA **CL1S-SPEC August 7, 2018 9:51 AM**

ORDERING INFORMATION ORDERING EXAMPLE: CL1S-A-48LU-5K-3-DB-RPA3

CL1S - A - [ ] [ ] - [ ] - [ ] - [ ] - [ ] - [ ]

SERIES
CL1S Cimarron LED Pedestrian Scale

NO. OF LEDS
16L 16 High brightness LEDs
32L 32 High brightness LEDs
48L 48 High brightness LEDs

MOUNTING
A 4" straight arm attached to housing complete with quick-mount plate

VOLTAGE
U[1] Universal 120V-277V, 50/60 Hz
1 120V
2 208V
3 240V
4 277V
5 480V, 60 Hz
F 347V, 60 Hz
E 220V, 50 Hz

CCT
3K 3000K, 80 CRI
4K 4000K, 70 CRI
5K 5000K, 67 CRI

DISTRIBUTION
2 Type II
3 Type III
4 Type IV
5M Type V Medium
5S Type V Short
5W Type V Wide
2L Type II rotated left
3L Type III rotated left
4L Type IV rotated left
2R Type II rotated right
3R Type III rotated right
4R Type IV rotated right

DRIVE CURRENT
Leave blank for 700mA (standard)
035[5] 350mA (32L, 48L)
053 525mA (32L) 520mA (48L)

COLOR
DB Dark Bronze
BL Black
WH White
GR Gray
PS Platinum Silver
CC Custom Color

OPTIONS
BC[3] Backlight control
CD Continuous dimming
F(X)[2] Fusing (replace X with voltage: 1-120V, 2-208V, 3-240V, 4-277V, 5-480V, F-347V)
RPA3 3" Round pole adapter
RPA4 4" Round pole adapter
TB Terminal block
WB Wall bracket
7PR Photocell receptacle

PIR MOTION/OCCUPANCY CONTROL OPTIONS
SCO_F[6,7,9] On/Off control (line voltage device not for use with 7PR receptacle option and external wireless control devices)
SCL_F[5,7] Add-on occupancy sensor for use with ext. wireless control device connected thru 7PR receptacle. Consult control manufacturer for compatibility.
SCP_F[4,5,7] Programmable dimming control (line voltage device not for use with 7PR receptacle option and external wireless control devices). A minimum of one SCP-REMOTE accessory remote control required for configuration; (Standard lens with greater sensitivity; motion detection radius equal to .75 X luminaire mounting height (approx. distance)
SWP[8,9] SiteSync Pre-Commission
SWPM[7,8,9] SiteSync Pre-Commission w/ Sensor

WIRELESS CONTROL OPTIONS
WIR[6] wiSCAPE Fixture Module, in-fixture relay for wireless lighting control
WIRSC[6] wiSCAPE Fixture Module, in-fixture relay for wireless lighting control and motion/occupancy control

Notes:
1 - Fuse option not available with universal voltage
2 - Select F3 fusing option for 220V
3 - Recommended for Type III and IV distributions only
4 - 0-10V fully adjustable dimming with automatic daylight calibration and different time delay settings, must order minimum of one SCP-REMOTE control to program dimming settings (see accessories)
5 - Not available with WIR or WIRSC
6 - Not available with SCO, SCL, SCP or SCPW
7 - Specify mounting height; 8 = 8' or less, 40 = 9' to 40'
8 - Specify group and zone. See SiteSync product page www.hubbelllighting.com/controls/SiteSync for more details
9 - 700MA only

Accessories and Services (Ordered Separately)

Catalog Number	Description
SCP-REMOTE	Remote Control for SCP/_F option. Order at least one per project to program and control the occupancy sensor
SWUSB*	SiteSync interface software loaded on USB flash drive for use with owner supplied PC (Windows based only). Includes SiteSync license, software and USB radio bridge node
SWTAB*	Windows tablet and SiteSync interface software. Includes tablet with preloaded software, SiteSync license and USB radio bridge node.
SWBRG	SiteSync USB radio bridge node only. Order if a replacement is required or if an extra bridge node is requested.
SW7PR+	SiteSync 7 Pin on fixture module On/Off/Dim, Daylight Sensor 120-480VAC

* When ordering SiteSync at least one of these two interface options must be ordered per project.
+ Available as a SiteSync retrofit solution for fixtures with an existing 7pin receptacle.

Hubbell Control Solutions - Accessories (sold separately)

Catalog Number	Description	HCS System
NXOFM-1R1D-UNV	On-fixture Module (7-pin), On / Off / Dim, Daylight Sensor with HubbNET Radio and Bluetooth® Radio, 120-480VAC	NX Distributed Intelligence™
WIR-RME-L	On-fixture Module (7-pin or 5-pin), On / Off / Dim, Daylight Sensor with wiSCAPE Radio, 110-480VAC	wiSCAPE® Lighting Control

For additional information related to these accessories please visit www.hubbellcontrolsolutions.com. Options provided for use with integrated sensor, please view specification sheet ordering information table for details.

SiteSync 7-Pin Module



SW7PR

- SiteSync Features in a new form
- Available as an accessory for new construction or retrofit applications (with existing 7-Pin receptacle)
- Available on all products that have a 7-Pin receptacl
- Does not interface with occupancy sensors

SiteSync LIGHTING CONTROLS

© 2018 HUBBELL OUTDOOR LIGHTING, All Rights Reserved • For more information visit our website: **www.hubbelloutdoor.com** • Printed in USA

PERFORMANCE DATA

				5K (5000K NOMINAL, 70 CRI)					4K (4000K NOMINAL, 70 CRI)					3K (3000K NOMINAL, 70 CRI)				
NUMBER OF LEDS	DRIVE CURRENT (MILLIAMPS)	SYSTEM WATTS	DISTRIBUTION TYPE	LUMENS	LPW*	B	U	G	LUMENS	LPW*	B	U	G	LUMENS	LPW*	B	U	G
16	700mA	38W	2	3937	104	1	0	2	3890	102	1	0	2	3096	81	1	0	2
			3	3971	104	1	0	2	3932	103	1	0	2	3116	82	1	0	1
			4	4021	106	1	0	1	3981	105	1	0	1	3155	83	1	0	1
			5S	4471	118	2	0	0	4427	117	2	0	0	3508	92	2	0	0
			5M	4430	117	2	0	1	4387	115	2	0	1	3485	89	2	0	0
			5W	4053	107	3	0	1	4013	106	3	0	1	3461	91	3	0	1
32	350mA	38W	2	4142	109	1	0	2	4102	108	1	0	2	3250	86	1	0	2
			3	4167	110	1	0	2	4126	109	1	0	2	3271	86	1	0	1
			4	4221	111	1	0	1	4179	110	1	0	1	3311	87	1	0	1
			5S	4692	123	2	0	0	4645	122	2	0	0	3682	97	2	0	0
			5M	4651	122	2	0	1	4604	121	2	0	1	3649	96	2	0	1
			5W	4255	112	3	0	1	4212	111	3	0	1	3337	88	2	0	1
32	525mA	56W	2	5855	105	2	0	3	5797	104	2	0	3	4595	82	1	0	2
			3	5889	105	2	0	2	5831	104	2	0	2	4622	83	1	0	2
			4	5963	106	1	0	2	5905	105	1	0	2	4679	84	1	0	2
			5S	6633	118	2	0	0	6567	117	2	0	0	5205	93	2	0	0
			5M	6572	117	3	0	1	6507	116	3	0	1	5157	92	2	0	1
			5W	6012	107	3	0	2	5954	106	3	0	2	4717	84	3	0	1
48	350mA	55W	2	6187	112	2	0	3	6126	111	2	0	3	4855	88	1	0	2
			3	6492	118	2	0	2	6428	117	2	0	2	4885	89	1	0	2
			4	6304	115	1	0	2	6242	113	1	0	2	4946	90	1	0	2
			5S	7010	127	3	0	0	6941	126	3	0	0	5500	100	2	0	0
			5M	6947	126	3	0	1	6878	125	3	0	1	5451	99	3	0	1
			5W	6353	116	3	0	2	6291	114	3	0	2	5409	98	3	0	2
32	700mA	76W	2	7751	102	2	0	3	7674	101	2	0	3	6082	80	2	0	3
			3	7767	102	2	0	2	7694	100	2	0	2	6119	81	2	0	2
			4	7896	104	1	0	2	7818	103	1	0	2	6196	82	1	0	2
			5S	8780	116	3	0	0	8693	114	3	0	0	6894	91	3	0	0
			5M	8700	114	3	0	1	8614	113	3	0	1	6827	90	3	0	1
			5W	7959	105	3	0	2	7881	104	3	0	2	6245	82	3	0	2
48	525mA	82W	2	8585	105	2	0	3	8500	104	2	0	3	6736	82	2	0	3
			3	9010	110	2	0	3	8920	109	2	0	3	6777	83	2	0	2
			4	8747	107	1	0	2	8660	106	1	0	2	6863	84	1	0	2
			5S	9725	119	3	0	0	9629	117	3	0	0	7630	93	3	0	0
			5M	9637	118	3	0	2	9541	116	3	0	2	7563	92	3	0	1
			5W	8816	108	4	0	2	8729	106	4	0	2	7506	92	3	0	2
48	700mA	110W	2	11713	106	3	0	3	11597	105	3	0	3	9191	84	2	0	3
			3	12293	112	3	0	3	12171	111	3	0	3	9247	84	2	0	3
			4	11935	108	2	0	3	11816	107	2	0	3	9364	85	2	0	2
			5S	13269	121	3	0	0	13138	119	3	0	0	10411	95	3	0	0
			5M	13149	120	4	0	2	13019	118	4	0	2	10317	94	3	0	2
			5W	12028	109	4	0	3	11910	108	4	0	3	9409	86	4	0	2

Lumen values are from photometric tests performed in accordance with IESNA LM-79-08. Data is considered to be representative of the configurations shown. Actual performance may differ as a result of end-user environment, application and inherent performance tolerances of the electrical components.

PROJECTED LUMEN MAINTENANCE

AMBIENT TEMP.	0	25,000	50,000	*TM-21-11 60,000	100,000	CALCULATED L70 (hours)
25°C / 77°F	1.00	0.98	0.96	0.96	0.94	>675,000
40°C / 104°F	0.98	0.96	0.95	0.94	0.92	>556,000

* Nichia 219B, 700mA, 85°C Ts, 10,000hrs

LUMINAIRE AMBIENT TEMPERATURE FACTOR (LATF)

AMBIENT DATA		
TEMP		LUMEN MULT.
0°C	32°F	1.02
10°C	50°F	1.01
20°C	68°F	1.00
25°C	77°F	1.00
30°C	86°F	1.00
40°C	104°F	0.98
50°C	122°F	0.98

© 2018 HUBBELL OUTDOOR LIGHTING, All Rights Reserved • For more information visit our website: **www.hubbelloutdoor.com** • Printed in USA **FML14-SPEC August 7, 2018 9:51 AM**

ELECTRICAL DATA

NUMBER OF LED's	NUMBER OF DRIVERS	Drive Current [milliamps]	INPUT VOLTAGE (VOLTS)	OPER. CURRENT [AMPS]	SYSTEM POWER [WATTS]	IN-RUSH CURRENT (AMPS)
16	1	std. (700mA)	120	0.32	37.8	
			277	0.15	37.5	
			347			
			480			
32	2		120	0.63	75.5	
			277	0.29	74.8	
			347			
			480			
48	3		120	0.95	110.5	
			277	0.44	110.9	
			347			
			480			

Consult factory for 350mA and 520mA electrical data

ACCESSORIES/REPLACEMENT PARTS - Order Separately

CATALOG NUMBER	DESCRIPTION
SCP-REMOTE	Remote control for SCP option. Order at least one per project to program and control
SWUSB*	SiteSync interface software loaded on USB flash drive for use with owner supplied PC (Windows based only). Includes SiteSync license, software and USB radio bridge node.
SWTAB*	Windows tablet and SiteSync interface software. Includes tablet with preloaded software, SiteSync license and USB radio bridge node.
SWBRG+	SiteSync USB radio bridge node only. Order if a replacement is required or if an extra bridge node is requested.
93052458	20KA surge protection with an end of life LED indicator

* When ordering SiteSync at least one of these two interface options must be ordered per project.
+ If needed, an additional Bridge Node can be ordered.

PHOTOCONTROL EQUIPMENT

CATALOG NUMBER	DESCRIPTION
PTL-1	Photocontrol - twist-lock cell (120V)
PTL-8	Photocontrol - twist-lock cell (120-277V)
PTL-5	Photocontrol - twist-lock cell (480V)
PTL-6	Photocontrol - twist-lock cell (347V)
PSC	Shorting cap - twist-lock

MOUNTING ACCESSORIES

CATALOG NUMBER	DESCRIPTION
CL1S-RPA3-ACC-XX[1]	Round pole adapter for straight arm (3¼ - 3¾")
CL1S-RPA4-ACC-XX[1]	Round pole adapter for straight arm (3⅞ - 4½")
WB-AREA-XX	Wall bracket

1 Replace XX with color choice, eg.: DB for Dark Bronze

TENON TOP POLE BRACKET ACCESSORIES

(2 3/8" OD tenon, RSS version requires 4" round pole adapter)

Catalog Number	Description
SETA2-XX[1]	Square pole tenon adapter (4 at 90 degrees)
RETA2-XX[1]	Round pole tenon adapter (4 at 90 degrees)
TETA-XX[1]	Triangular pole tenon adapter (3 at 120 degrees)

1 Replace XX with color choice, eg.: DB for Dark Bronze

SURGE PROTECTION

- Field replaceable surge protection device (SPD) provides 20KA and 10KV protection meeting ANSI/IEEE C62.41.2 Category C High and Surge Location Category C3
- The SPD is designed with a clamping voltage of 1600V at 20KA using industry standard 8/20µs waveform
- Max surge current = 20,000 Amps (see table)
- LED Indicator – Green LED is unlit at end of life

Pulse Rating (8 x 20 µSec)	
Strikes	**Surge**
1	20,000 A
2	15,000 A
15	10,000 A
120	3,000 A

	cRUus	CE
I_n	10KA	5KA

© 2018 HUBBELL OUTDOOR LIGHTING, All Rights Reserved • For more information visit our website: **www.hubbelloutdoor.com** • Printed in USA

FIXTURE MOUNTING

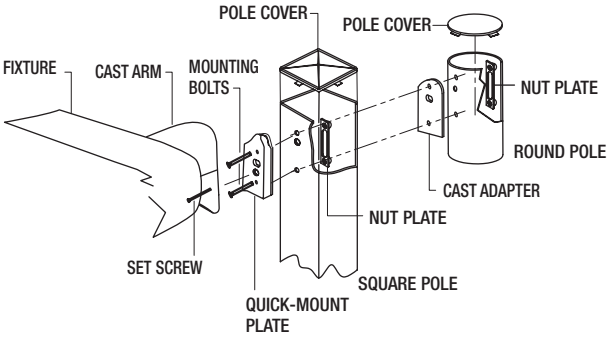

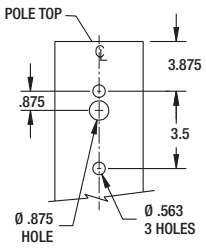

#2 DRILL PATTERN FOR POLES

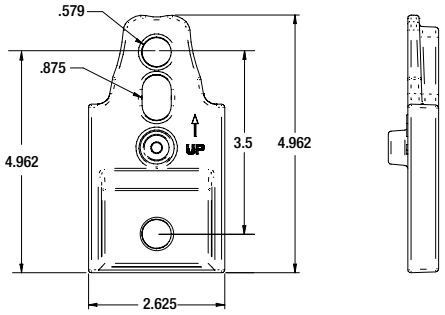

QUICK-MOUNT PLATE

FIXTURE MOUNTING – FACTORY ROTATED OPTICS

For proper light distribution and performance, rotated optics must be mounted as referenced in illustration. Consult instruction sheet included when mounting.

2L	Type II rotated 90˚ left
3L	Type III rotated 90˚ left
4L	Type IV rotated 90˚ left

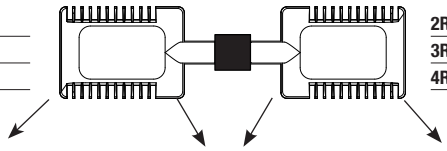

2R	Type II rotated 90˚ right
3R	Type III rotated 90˚ right
4R	Type IV rotated 90˚ right

QUICK MOUNT INSTALLATION

The Cimarron CL1S installation features:

1 Quick-mount plate attaches to pole with two 3/4" bolts

2 4 - slot hex 1/4" captured screws secure luminaire door to top

3 Safety-latch holds luminaire door to prevent "free swing" door

4 Two stage hinge mechanism built into integral arm

5 Quick-connect wiring for a simplified, hassle-free installation

For installation video scan this code or visit link below:

http://www.youtube.com/user/hubbelloutdoorbrands













© 2018 HUBBELL OUTDOOR LIGHTING, All Rights Reserved • For more information visit our website: **www.hubbelloutdoor.com** • Printed in USA **CL1S-SPEC August 7, 2018 9:51 AM**

PGN

High Performance LED Sconce

Catalog Number	
Comments	Type



FEATURES

Application

The PGN is an indoor or outdoor architectural high performance LED sconce which offers "Normally On" and emergency operation in one fixture. "Normally On" operation is powered by line voltage (120 or 277) that can be switched on/off and used for accent lighting, entrance/exit illumination. Failure of line voltage will result in automatic operation from secondary DC voltage which must be supplied from an external 6-12V DC emergency lighting unit. The PGN includes a field installable full cut-off shield to address "dark sky" compliant requirements.

Construction

Housing and mounting plate are constructed of $^1/_8$" die-cast aluminum and sealed with a $^1/_8$" closed-cell silicone gasket. The acrylic lens allows 92% light transmission. The reflector is electro-polished aluminum with 95% reflectance. Housing finish is powder coated electro-deposition paint available in four colors: dark bronze, white, platinum silver and black. Full cut-off shield constructed of cold-rolled steel, painted to match color as ordered.

Installation

Universal backplate knockouts for mounting to standard $3^1/_2$", 4" octagonal and 4" square electrical boxes. Backplate mounting is performed using installer supplied hardware. An adhesive-backed neoprene gasket is provided to ensure a waterproof seal.
A $^1/_2$" – $^1/_4$ NPT threaded conduit opening is provided at the top of the enclosure and sealed with a closure plug. The housing “snaps” to the back plate by a “pin and socket” arrangement, and is secured with two Phillips head screws.

Illumination

The unit is illuminated by 4 high power LED's arranged so that in the event of 1 or 2 LED failures the unit will continue to operate.

Compliances

UL 924 Listed
UL Wet Location Listed
NFPA 101 Life Safety Code
NFPA 70 National Electrical Code
OSHA
IES full cut-off compliant with application of field installed shield
U.S. Patent No. D627,916

Warranty

Three-year warranty for unit and electronics

ORDERING GUIDE

PGN

Model

Finish

W - White
Z - Dark Bronze
P - Platinum Silver
B - Black

HUBBELL Lighting

PGN

High Performance LED Sconce

SPECIFICATIONS

Electronics

The PGN has two modes of operation:
Normal mode: In normal mode, power is suppled from 120V or 277V AC source and may be switched on/off allowing the unit to behave like a typical luminaire.
Emergency mode: Upon failure of normal utility power, an external (6-12VDC) emergency power source (supplied separately) having transfer logic will operate the PGN as an emergency unit. In order for the unit to function properly as emergency lighting (NEC 700.12), the DC emergency source must be powered (under normal conditions) from the same AC circuit as that to the unit.

Number of Lamps: Four High Output LEDs
LED Lamplife: 48,000 hrs. at 70% of initial

Lamp Configuration: 4 individually driven LEDs provide illumination. In the event of 1 or 2 LED failures, the remaining LED's will continue to function.

Lamp Color: Neutral White, 4000K
Color Rendering Index (CRI): 75
Total Lamp Output: 445 Lumens min. initial
Input: 120/277VAC, 60 Hz. "Normal"
6-12VDC "Emergency"
Functional Circuitry: Transient surge protection

Operating Temperature Range

-30°C to 50°C (-22°F to 122°F)

Power Consumption:

Normal
17W @ 120VAC, 17W @277VAC
Emergency
12W @ 6VDC, 13W @12VDC

Power Factor: Average .80 (lagging)

DIMENSIONS

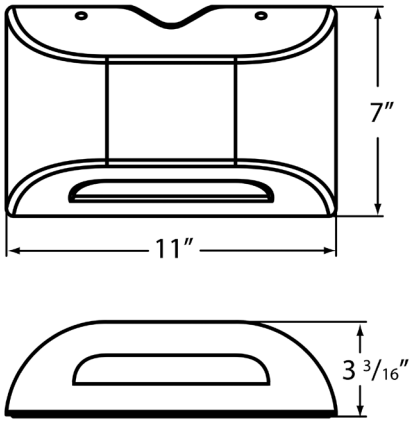

COMPATIBLE EMERGENCY UNITS

		6 V DC	12V DC	120/277 VAC	Remote Capacity	# of PGN
Combo(1)	HCXURWRC12	√			12 W	1
	HCXURW-0-RC12	√			23 W	1
Unit(1)	LZ30	√			20 W	1
	LZ65	√			55 W	4
	LM33	√			18 W	1
	LM40	√			25 W	2
	LM40-12V		√		25 W	2
	AS80	√			65 W	5
Inverter	LiteGear® LG125			√	125 Va	6

(1) Each instance assumes standard lamp-heads are used on the unit, except the **HCXURW-0-RC12**, which is supplied without lamp heads.

ILLUMINATION PATTERN

Single Unit Coverage

Mounting Height: 9'
Outdoor Reflectance: 0/30/10
Indoor Reflectance: 80/50/20



	Indoor	Outdoor
1 FC Average (W x D)	35' X 10'	29' X 10'
1 FC Minimum (W x D)	11' X 10'	10' X 10'

Multiple Unit Spacing

Mounting Height: 9'
Illuminated Path Depth: 6'
Outdoor Reflectance: 0/30/10
Indoor Reflectance: 80/50/20

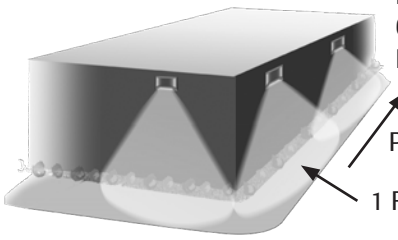

	Indoor	Outdoor
1 FC Average	49'	37'
1 FC Minimum	19'	16'

Copyright© Hubbell Lighting, Inc., All Rights Reserved • Specifications subject to change without notice. • Printed in U.S.A.
0603436 05/17

GEOPAK SERIES SIZE 1 LED

Architectural Wallpack

TRP1/RDI1/QSP1

NEW

Cat.#	
Job	Type

HUBBELL Outdoor Lighting

Approvals

SPECIFICATIONS

APPLICATIONS

- Small sized architectural wallpacks in three stylish shapes with molded contours to accentuate building architecture. Provides excellent illumination in energy-saving LED systems.
- Back box accessory available for surface conduit application.

Construction:

- Housing is made from die-cast aluminum with a hinged back-plate for ease of installation and maintenance.
- The LED bezel and trim-plate are made of stainless steel.
- Five powder coat standard finishes, plus custom color options.
- Wet Location Listed to UL924 and UL1598 Standard.

LED:

- 12 high power LEDs delivering up to 3,000 lumens.
- Up to 118 lumens per watt
- Type II, III and IV distributions for a wide variety of applications.
- Zero uplight (U0), dark sky, neighbor friendly

Electrical:

- 120-277 operation, 50/60Hz
- 0-10V dimming driver standard
- 10kA surge protector
- Photocell and occupancy sensor options available for complete on/off and dimming control

Battery Backup:

- Intergral Battery Backup provides emergency lighting for the required 90 minute path of egress.
- Includes a long-life Lithium Iron Phosphate battery with optional battery heater for cold temperature application.
- Utilizes 4 LEDs in emergency mode with 657 lumens. Each of the 4 LEDs in emergency are designed to function independently in the unlikely event of a single LED malfunction
- Spectron® self-testing/self-diagnostic electronics are included standard
- Independent dedicated driver and LED array for battery/emergency mode operation.

Installation:

- Universal plate for mounting to standard 3 1/2" and 4" square electrical boxes. All connections are made from connections at the rear of the unit.
- Optional back-box accessory available for surface conduit application. See BB-Geo accessories.

Listings:

- UL 1598 listed for use in wet locations
- Drivers IP66 and RoHS compliant
- DesignLights Consortium® (DLC) qualified. Please refer to the DLC website for specific product qualifications at www.designlights.org

Warranty:

- For more information visit:

http://www.hubbelloutdoor.com/resources/warranty/

PRODUCT IMAGE(S)



DIMENSIONS

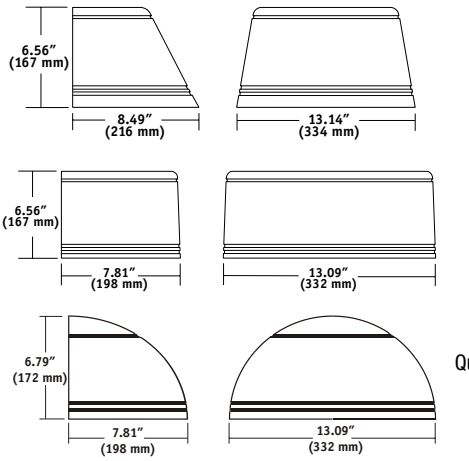

SHIPPING INFORMATION

Catalog Number	Weight (lbs)	Carton Dimensions		
		Length Inch (cm)	Width Inch (cm)	Height Inch (cm)
TRP1	11.5	17.0	9.9	10.0
RDI1	11.5	18.0	11.0	9.25
QSP1	10.5	17.0	9.6	10.5

CERTIFICATIONS/LISTINGS

C SA US

*3000K and warmer CCTs only

DLC QPL LISTED

ORDERING INFORMATION

ORDERING EXAMPLE: TRP-12L-20-4K-3-1-BL-SCP-EH

[ ] - [ ] - [ ] - [ ] - [ ] - [ ] - [ ] - [ ] - [ ] - [ ]

HOUSING	VERSION	WATTAGE	CCT/CRI	DISTRIBUTION	VOLTAGE	FINISH	CONTROL OPTIONS	OPTIONS
TRP1 Trapeziod	12L 12 LEDS	15 15 watts	3K7 3000K, 70CRI	2 Type II	U 120-277	BL Black	PCU Button Photocell	F[4] Fusing (only available with STD fixture configuration, 120-277V only)
RDI1 Radius		20 20 watts	4K7 4000K, 70CRI	3 Type III	1 120	DB Bronze	SCP[2,3] Programmable Motion Sensor	E[1] Battery Pack (0˚C)
QSP1 Quartersphere		30 30 watts	5K7 5000K, 70CRI	4 Type IV	2 208	GR Gray	SPECIFY SCP HEIGHT	EH[1] Battery Pack (-30˚C) with heater
					3 240	PS Platinum	8F Up to 8ft mount height	
					4 277	WH White	20F Up to 20ft mount height	
						CC Custom		

[1] Voltage specific (120 or 277V only)
[2] Must order minimum of one remote control to program dimming settings, 0-10V fully adjustable dimming with automatic daylight calibration and different time delay settings, 120-277V only
[3] PCU option not applicable, included in sensor
[4] Must specify input voltage (120, 208, 240 or 277)

© 2016 HUBBELL OUTDOOR LIGHTING, All Rights Reserved • For more information visit our website: **www.hubbelloutdoor.com** • Printed in USA

ACCESSORIES - Order separately

Catalog Number	Description
SCP-REMOTE[2]	Remote control for SCP option. Order at least one per project to program and control.
BB-GEO-XX	Back box with 4 - 1/2" threaded conduit holes, specify finish by replacing "XX" with finish selection, eg. Dark Bronze "DB"

[2] Must order minimum of one remote control to program dimming settings, 0-10V fully adjustable dimming with automatic daylight calibration and different time delay settings, 120V-277V only



BB-GEO-XX – Mounted to luminaire

BB-GEO-XX

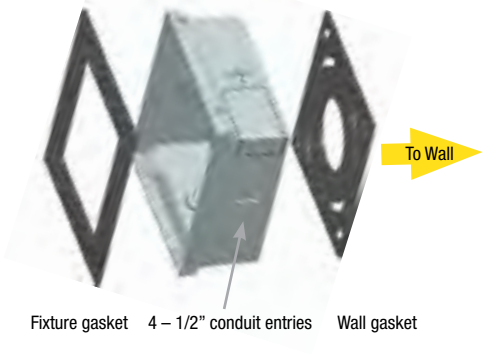

PERFORMANCE DATA (AC/Standard Configurations)

				5K (5000K nominal, 70 CRI)					4K (4000K nominal, 70 CRI)					3K (3000K nominal, 70 CRI)				
# OF LEDS	DRIVE CURRENT	SYSTEM WATTS	DIST. TYPE	LUMENS	LPW[1]	B	U	G	LUMENS	LPW[1]	B	U	G	LUMENS	LPW[1]	B	U	G
12	350mA	13.9	2	1635	118	1	1	1	1577	113	1	1	1	1497	108	1	1	1
			3	1613	116	1	0	1	1556	112	1	0	1	1477	106	1	0	1
			4	1607	116	0	0	1	1550	111	0	0	1	1471	106	0	0	1
	500mA	19.9	2	2268	114	1	1	1	2176	109	1	1	1	2077	104	1	1	1
			3	2245	113	1	0	1	2140	108	1	0	1	2049	103	1	0	1
			4	2229	112	0	0	1	2150	108	0	0	1	2041	103	0	0	1
	700mA	28.2	2	2942	104	1	1	1	2885	102	1	1	2	2721	96	1	1	1
			3	2912	103	1	0	1	2836	101	1	0	1	2685	95	1	0	1
			4	2892	103	1	0	1	2789	99	1	0	1	2674	95	1	0	1

Electrical Data

Input Power Consumption

Drive Current (mA)	Input Voltage (V)	System Power (w)	Current (Amps)
350mA	120	13.9	0.12
	277		0.05
500mA	120	19.9	0.17
	277		0.07
700mA	120	28.2	0.24
	277		0.10

Battery backup units consume additional power during charging (maximum 32.2 watts for E, 50.7 watts for EH)

Projected Lumen Maintenance

Ambient Temp.	Operating Hours 0	25,000	50,000	TM-21-11[1] 60,000	100,000	L70 (hours)
25°C/77°F	1.00	0.98	0.97	0.95	0.91	>345,000
40°C/104°F	1.00	0.96	0.95	0.92	0.87	>268,000

LUMINAIRE AMBIENT TEMPERATURE FACTOR (LATF)

AMBIENT TEMPERATURE		LUMEN MULTIPLIER
0° C	32° F	1.02
10° C	50° F	1.01
20° C	68° F	1.00
25° C	77° F	1.00
30° C	86° F	1.00
40° C	104° F	0.99
50° C	122° F	0.98

Use these factors to determine relative lumen output for average ambient temperatures from 0-40°C (32-104°F).

PHOTOMETRIC REPORTS
(30w, 4000K shown)

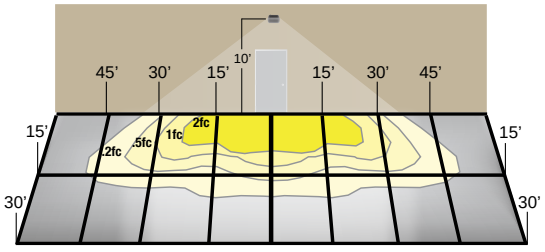

TYPE II

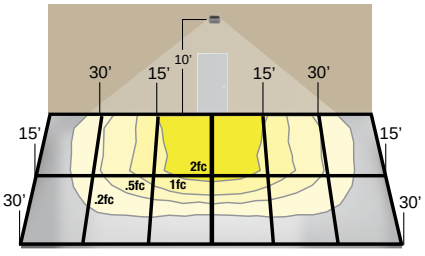

TYPE III

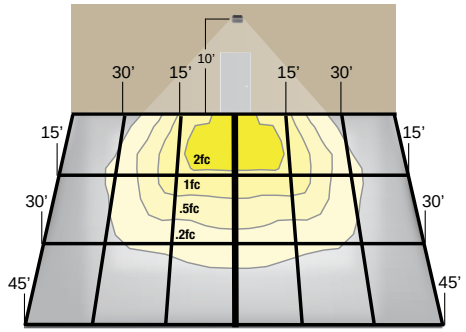

TYPE IV (Forward throw)

Hubbell Outdoor Lighting • 701 Millennium Boulevard • Greenville, SC 29607 • Phone: 864-678-1000

Due to our continued efforts to improve our products, product specifications are subject to change without notice.

© 2016 HUBBELL OUTDOOR LIGHTING, All Rights Reserved • For more information visit our website: **www.hubbelloutdoor.com** • Printed in USA

GeoPak - Battery Back Up

Functional Circuitry: Transient surge protection device on AC input. Upon failure of the normal utility power, an LED driver is automatically activated to power the emergency LEDs. Upon resumption of normal utility power, the LED driver is turned off, and the battery is recharged through a micro-controller based 3-stage charger. The battery is a maintenance-free Lithium Iron Phosphate (LiFePo) type. A low voltage battery disconnect (LVD) feature protects the battery from severe damage during prolonged power failures. Manual testing is available at any time using the push-to-test button. The optional heater features a heating wrap and thermostat to maintain optimal battery temperature during charge or discharge. The GeoPak includes the following features:

- Battery re-charge within 24 hours
- AC Lock-out circuit
- Self-diagnostics monitors LED status, LED driver circuit, battery capacity and charger function and displays any fault detection by means of a flashing code.
- Self-Test feature runs a 1 minute test once a month and an alternating 30 or 60 minute test once every 6 months. Multi-color LED indicator provides visible fault detection and charging status.
- User initiated 1, or 90-minute system test feature
- 15 minute re-transfer delay
- Automatic unit transfer in brown-out conditions (below 80% of nominal AC input voltage).
- Battery backup units consume 6 watts when charging a dead battery and 2 watts during maintenance charging. EH (units with a heater) consume up to an additional 8 watts when charging if the battery temp is lower than 10°C

Emergency Photometric Performance (1 fc average .1 fc minimum)

28’ multi-unit spacing at 10’ MH with 0/30/10 reflectances on a 6’ path

26’ x 10’ single unit coverage at 10’ MH with 0/30/10 reflectances

6’ x 19’ forward throw coverage at 10’ MH with 0/30/10 reflectances

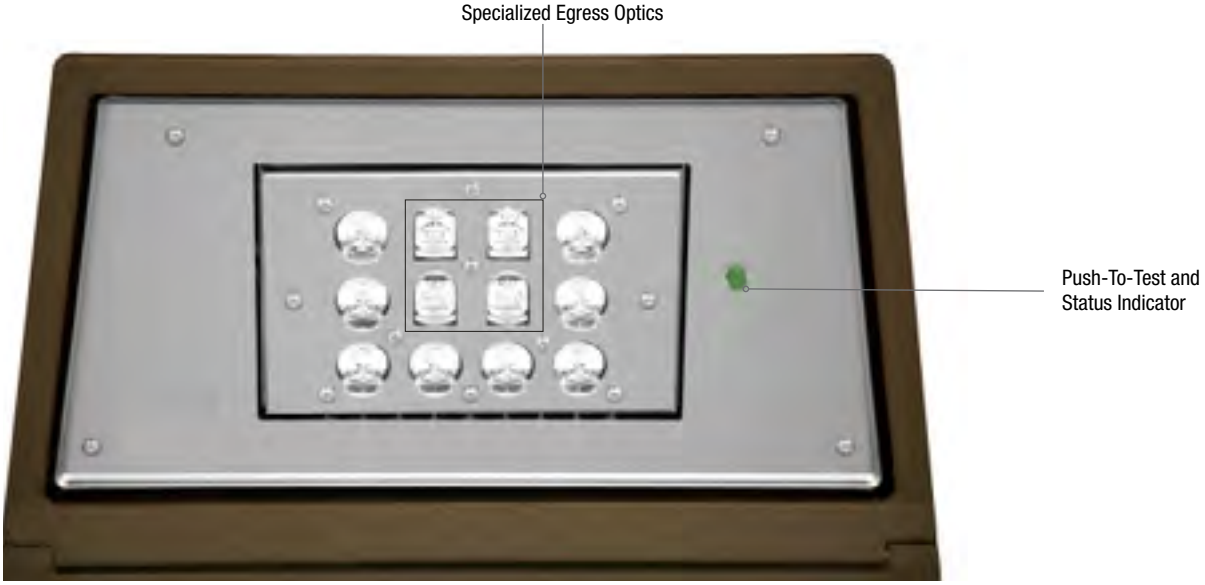

Normal Mode

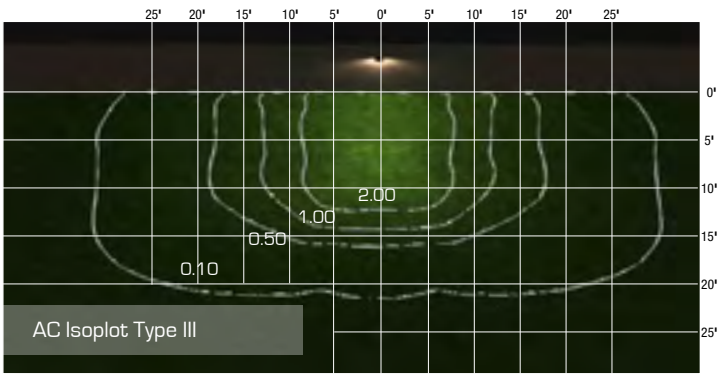

Emergency Mode

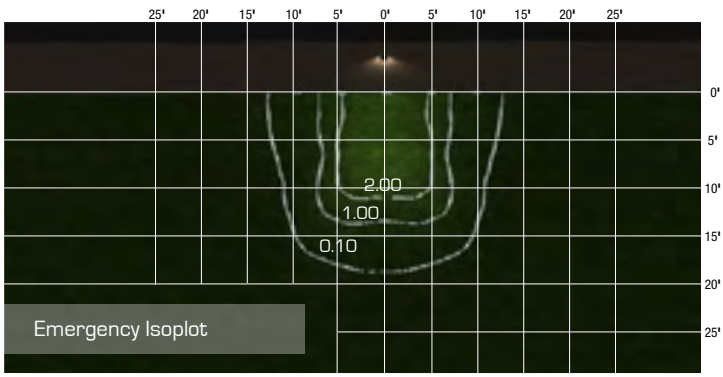

Provides Life Safety Code average illuminance of 1.0 fc. Assumes open space with no obstructions.

Diagrams for illustration purposes only, please consult factory for application layout.

© 2016 HUBBELL OUTDOOR LIGHTING, All Rights Reserved • For more information visit our website: **www.hubbelloutdoor.com** • Printed in USA

Calculation Summary					
Label	**Avg**	**Max**	**Min**	**Avg/Min**	**Max/Min**
PUMPS	10.18	12.1	6.3	1.6	1.9
SITE	0.81	10.9	0.0	N.A.	N.A.
RETAIL PARK	0.77	2.1	0.3	2.6	7.0

PUMP CANOPY LIGHTS "ON"

Luminaire Schedule (note fixture cataloge numbers are not complete)					
Type	**Qty**	**Lum. Lumens**	**LLF**	**Lum. Watts**	**Description**
CA	16	4915	0.900	55.6	ARS-24L4K-070-5M-CS
S3B	1	3561	0.900	56	CL1S-32L-4K-3-053-BC
S4B	7	2801	0.900	38	CL1S-32L-4K-4-035-BC
S4	1	5905	0.900	56	CL1S-32L-4K-4-053
W1	3	413	0.900	17.7	PGN WITH Full Cutoff Visor
W4	15	1550	0.900	13.9	TRP1-12L15-4K7-4

NOTES:
1) EXACT MOUNTING DETAILS TO BE DETERMINED AT JOBSITE BY OTHERS.
2) CALCULATIONS MAY or MAY NOT SHOW THE EFFECT OF SHADOWING CAUSED BY BUILDINGS AND OBJECTS WITHIN THE CALCULATED SPACE OR IN THE SITE AREA.
3) READINGS SHOWN ARE INITIAL HORIZONTAL FOOTCANDLES ON A FLAT SITE WITHOUT REFLECTIONS OR OBSTRUCTIONS UNLESS OTHERWISE INDICATED.
4) THIS CALCULATION IS BASED ON LIMITED INFORMATION SUPPLIED BY OTHERS TO SWANEY LIGHTING ASSOCIATES AND STANDARD ASSUMPTIONS OF THE SPACE AND/OR SITE.
5) CONFORMANCE TO CODES AND OTHER LOCAL REQUIREMENTS AS DETERMINED BY THE AHJ ARE THE RESPONSIBILITY OF THE OWNER AND/OR THE OWNER'S REPRESENTATIVE.
6) THIS LAYOUT DRAWING MUST BE COORDINATED WITH THE SITE LOCATION FOR CORRECT FIXTURE ORIENTATION.
7) DOCUMENTS PRINTED OR PLOTTED FROM ELECTRONIC FILES MAY APPEAR AT OTHER THAN THE DESIRED OR ASSUMED GRAPHIC SCALES. IT IS THE RESPONSIBILITY OF THE RECIPIENT TO VERIFY THAT THE PRINTED OR PLOTTED-TO-SCALE DRAWING IS PRINTED TO SCALE.

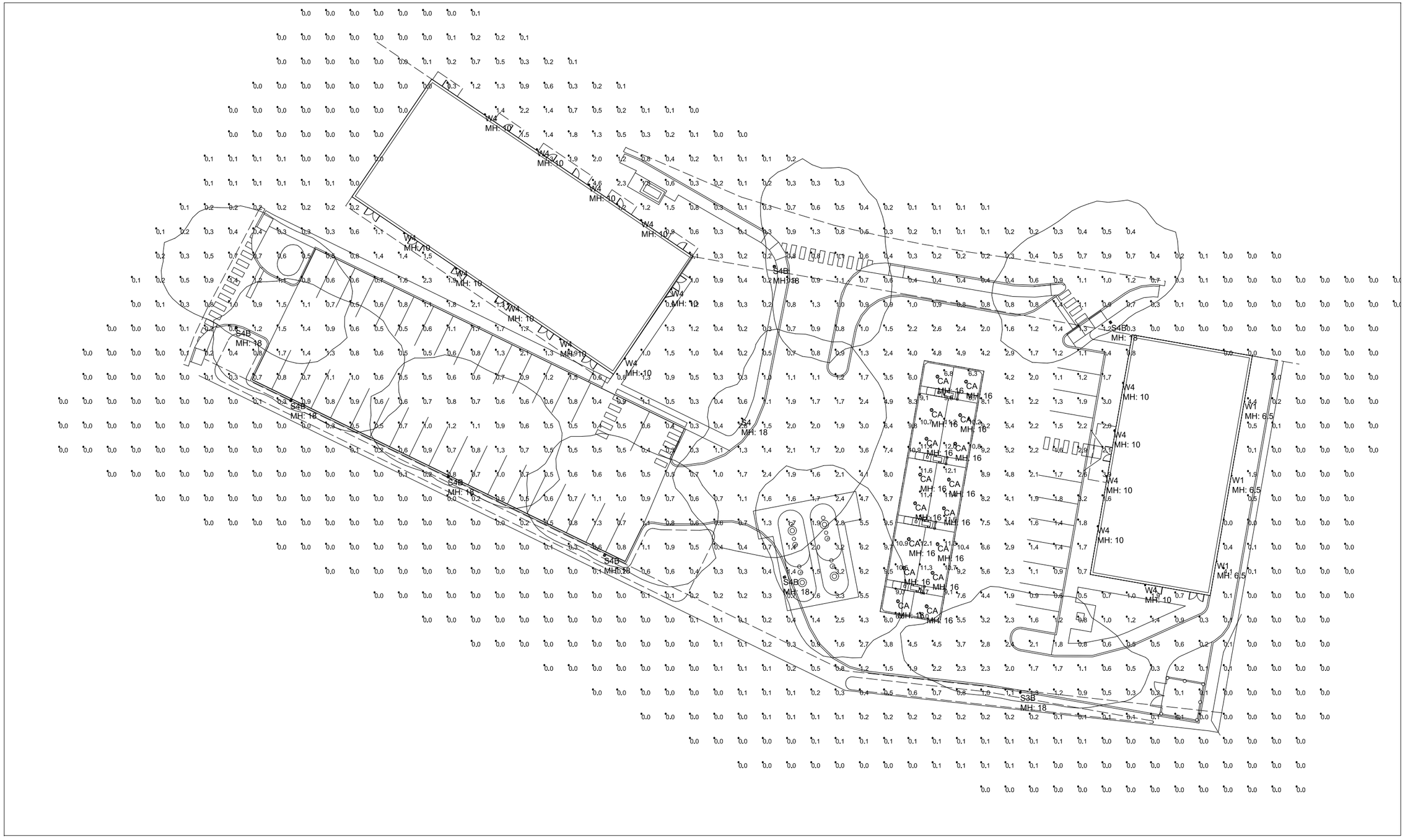

PLAN VIEW

TITLE
PINE STATE FAMILY MART
PORTLAND, ME
SITE LIGHTING LAYOUT

SITE 39214.AGI

GENERATED BY SWANEY LIGHTING, SCARBOROUGH ME - 207-883-7100 - swaneylighting.com

Date:8/8/2018

Page 1 of 1

GENERATED FOR:
SEBAGO TECH

SCALE NOT TO SCALE

SWANEY LIGHTING ASSOCIATES, INC.

NOTICE: THIS DRAWING IS THE EXCLUSIVE PROPERTY OF SWANEY LIGHTING ASSOCIATES. ITS ACCEPTANCE CONSTITUTES AN AGREEMENT THAT THE DRAWING WILL BE TREATED AS CONFIDENTIAL. THIS DRAWING IS TO BE USED FOR NO PURPOSE OTHER THAN AS DETAILED IN WRITING BY SWANEY LIGHTING ASSOCIATES, AND IS NOT TO BE REPRODUCED IN ANY MANNER, RETURNED UPON REQUEST AND IS NOT TO BE COMMUNICATED, DISCLOSED OR COPIED, EXCEPT AS SPECIFICALLY AUTHORIZED IN WRITING BY SWANEY LIGHTING ASSOCIATES.
THE USER OF THIS DRAWING IS SOLELY RESPONSIBLE TO VERIFY THE BEST UTILIZATION OF LIGHTING FIXTURES INCLUDED IN THIS DRAWING. IT IS PROVIDED USING FIXTURE PHOTOMETRICS FURNISHED BY THE MANUFACTURER. SWANEY LIGHTING ASSOCIATES MAKES NO WARRANTY AS TO THE PERFORMANCE SHOWN IN ES FILE IS NOT THE RESPONSIBILITY OF THE MANUFACTURER, IT'S USE FOR ANY OTHER PURPOSE IS NOT AUTHORIZED BY SWANEY LIGHTING ASSOCIATES.

Calculation Summary					
Label	**Avg**	**Max**	**Min**	**Avg/Min**	**Max/Min**
PUMPS	0.15	0.4	0.1	1.5	4.0
SITE	0.40	4.6	0.0	N.A.	N.A.
RETAIL PARK	0.77	2.1	0.3	2.6	7.0

PUMP CANOPY LIGHTS "OFF"

Luminaire Schedule (note fixture cataloge numbers are not complete)					
Type	**Qty**	**Lum. Lumens**	**LLF**	**Lum. Watts**	**Description**
CA	16	4915	0.900	55.6	ARS-24L4K-070-5M-CS
S3B	1	3561	0.900	56	CL1S-32L-4K-3-053-BC
S4B	7	2801	0.900	38	CL1S-32L-4K-4-035-BC
S4	1	5905	0.900	56	CL1S-32L-4K-4-053
W1	3	413	0.900	17.7	PGN WITH Full Cutoff Visor
W4	15	1550	0.900	13.9	TRP1-12L15-4K7-4

NOTES:
1) EXACT MOUNTING DETAILS TO BE DETERMINED AT JOBSITE BY OTHERS.
2) CALCULATIONS MAY or MAY NOT SHOW THE EFFECT OF SHADOWING CAUSED BY BUILDINGS AND OBJECTS WITHIN THE CALCULATED SPACE OR IN THE SITE AREA.
3) READINGS SHOWN ARE INITIAL HORIZONTAL FOOTCANDLES ON A FLAT SITE WITHOUT REFLECTIONS OR OBSTRUCTIONS UNLESS OTHERWISE INDICATED.
4) THIS CALCULATION IS BASED ON LIMITED INFORMATION SUPPLIED BY OTHERS TO SWANEY LIGHTING ASSOCIATES AND STANDARD ASSUMPTIONS OF THE SPACE AND/OR SITE.
5) CONFORMANCE TO CODES AND OTHER LOCAL REQUIREMENTS AS DETERMINED BY THE AHJ ARE THE RESPONSIBILITY OF THE OWNER AND/OR THE OWNER'S REPRESENTATIVE.
6) THIS LAYOUT DRAWING MUST BE COORDINATED WITH THE SITE LOCATION FOR CORRECT FIXTURE ORIENTATION.
7) DOCUMENTS PRINTED OR PLOTTED FROM ELECTRONIC FILES MAY APPEAR AT OTHER THAN THE DESIRED OR ASSUMED GRAPHIC SCALES. IT IS THE RESPONSIBILITY OF THE RECIPIENT TO VERIFY THAT THE PRINTED OR PLOTTED-TO-SCALE DRAWING IS PRINTED TO SCALE.

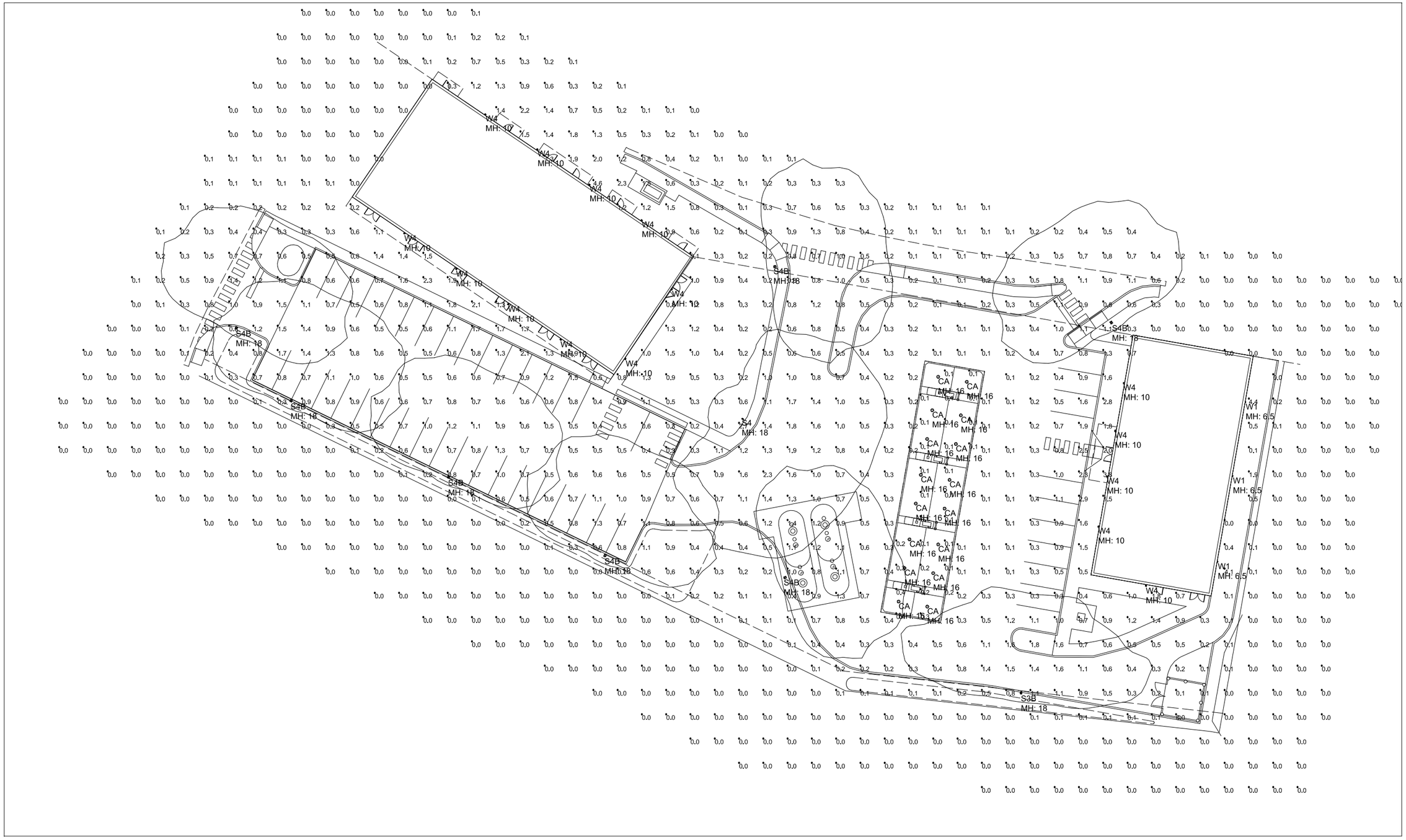

PLAN VIEW

TITLE
PINE STATE FAMILY MART
PORTLAND, ME
SITE LIGHTING LAYOUT

SITE 39214.AGI

GENERATED FOR: SEBAGO TECH

SCALE NOT TO SCALE

Date:8/8/2018

GENERATED BY SWANEY LIGHTING, SCARBOROUGH ME - 207-883-7100 - swaneylighting.com

Page 1 of 1

SWANEY LIGHTING ASSOCIATES, INC.

NOTICE: THIS DRAWING IS THE EXCLUSIVE PROPERTY OF SWANEY LIGHTING ASSOCIATES. ITS ACCEPTANCE CONSTITUTES AN AGREEMENT THAT THE DRAWING WILL BE TREATED AS CONFIDENTIAL, THIS DRAWING IS TO BE USED FOR NO PURPOSE OTHER THAN AS DETAILED IN WRITING BY SWANEY LIGHTING ASSOCIATES, AND IS NOT TO BE REPRODUCED, COPIED OR RETURNED UPON REQUEST AND IS NOT TO BE COMMUNICATED, DISCLOSED OR COPIED, EXCEPT AS SPECIFICALLY AUTHORIZED IN WRITING BY SWANEY LIGHTING ASSOCIATES. IT IS PROVIDED AS THE BEST UTILIZATION OF LIGHTING FIXTURES INCLUDED IN THIS DRAWING, IT IS PROVIDED USING FIXTURE PHOTOMETRICS PUBLISHED BY THE MANUFACTURER AND MAY NOT REFLECT ACTUAL PERFORMANCE. ANY VARIATION IN PERFORMANCE SHOWN IN ES FILE IS NOT THE RESPONSIBILITY OF THE MANUFACTURER, IT'S USE FOR ANY OTHER PURPOSE IS NOT AUTHORIZED BY SWANEY LIGHTING ASSOCIATES.

08: Financial Capability

Demonstration of financial capability will be submitted under separate cover.

34: Noise and Vibration (14-526(d)7)

- Evidence of noise levels for equipment, such as equipment specifications, to demonstrate consistency with zoning requirements

(i), (ii) All heating, ventilation and air conditioning equipment (HVAC), air handling units (AHU), emergency generators, and similar equipment will meet applicable state and federal emission requirements and generator testing timing and noise levels shall be performed in accordance with City standards. A temporary submittal waiver from manufacturer verification of emissions is requested. A waiver from standards is not requested and the information will be submitted under separate cover when the design is finalized.

09: Technical Capability

The applicant has retained Sebago Technics, Inc., a consulting engineering firm, to assist in all aspects of the proposed site development. A firm introduction and key personnel resumes are included in this section.

Introduction to Sebago Technics, Inc.



Year Established: 1981 (36 years in business)

About Us: Sebago Technics, Inc. (STI) is a consulting firm of more than 65 design professionals and technical staff providing services throughout New England. From the start, our business plan was simple: "to provide quality, cost-effective civil engineering services that are responsive to a customer's goals, schedule and budget." Our One Company capabilities and resources provide clients with experience and solutions to respond to their planning, permitting and design needs.



Structure: Employee-owned since 1998

Services: Civil, environmental, transportation & traffic engineering; municipal engineering; local/state/federal permitting and planning; land surveying & laser scanning; GIS; landscape architecture; environmental services; and natural resources.

Employee Disciplines:
Professional Engineers, Civil Engineers, Transportation Engineers, Landscape Architects, Professional Land Surveyors, Survey Technicians, CADD Designers, Wetland Scientist, Soil Scientist, Construction Inspectors, Environmental Scientists, GIS Professionals, Marketing, Administrative & Financial



Professional Focus: Sebago Technics provides engineering and planning services to both public and private sector clients. In the municipal and government sectors we have provided multiple discipline services through General Services Contracts (GSC) and project specific contracts. A few examples include the Portland Jetport, City of Portland Public Services, City of South Portland, City of Lewiston, City of Westbrook and several smaller communities. Our municipal sector work includes street and utility infrastructure design, municipal facility planning and specialty work such as Island marine and solid waste planning & engineering.

Location: South Portland, ME



Geographic Service Area: Maine, New Hampshire, Vermont, Massachusetts

Web Site: www.sebagotechnics.com

JAMES R. SEYMOUR, PE

Senior Project Manager



Mr. Seymour has been with Sebago Technics, Inc. since 1993. His role encompasses management of projects relating to civil engineering designs for private residential and commercial developments, and providing planning and development review services for municipal clients. His specific engineering design experience includes roadways, sewer/utilities, stormwater management plans and permitting, sediment and erosion control plans, State and Federal wetland/environmental permits for residential and commercial developments.

Mr. Seymour has strong experience in providing municipal planning and permitting review services. He has consulted with planning, code enforcement, and public services departments to assist Planning Boards in various roles.

EXPERIENCE

Municipal Planning/Engineering Review Experience:

1998 - 2004: Consulted with the City of Portland, as Acting Development Review Coordinator providing engineering peer review services and onsite construction observations to assure compliance with approved plans.

1998 - 2008: Provided construction monitoring for the Town of Windham with responsibilities of reviewing bonding, stormwater management review, and provided and onsite construction observations/reports.

2008 - Present: Provided the Town of Casco planning services to assist the Planning Board with processing various site/subdivision applications, and prepared ordinance revisions, to the Shoreland Zoning per State requirements, and assisted in instituting a contract zone for Camp Sunshine.

2012 - Present: Mr. Seymour has been the consulting Planner for the Town of Raymond in charge of directing the Planning Board with processing various site/subdivision applications, coordinating new ordinance revisions, and maintains weekly hours at the Town for general planner assistance.

2011 - Present: Mr. Seymour has been the consulting engineer for the Town of Brunswick assisting the Town with peer reviews of site/subdivision applications, and has drafted new ordinance revisions.

2012 - Present: Mr. Seymour has been providing planning and engineering consultation to the Town of Poland on an as-needed basis to assist the Planning Board with plan reviews and drafting ordinances.

The variety of projects that Mr. Seymour has been involved with provides him with a well-balanced technical knowledge of planning and land use development issues and engineering experience. Additionally, his involvement with a variety of clientele gives him a unique and positive insight to successfully communicate and coordinate projects from design to construction stages.

EDUCATION

University of Maine, Orono, ME
Bachelor of Science, Civil Engineering

REGISTRATIONS

Professional Engineering:
Maine #9984

Certified Training for
Hazardous Waste Operations
40 hr. Training Compliance with OSHA
29CFR 1910.120

Certified Professional in Maintenance and Inspection for Best Management Practices by Maine DEP and Inclusion on the Qualified Third Party Inspector List for the Long Creek Watershed Management District (May 2011)

MEMBERSHIPS

Former Town of Windham Planning Board member

New England Sports Turf Manager's Association (NESTMA)

Scarborough Little League Board of Directors
League - President
2015 to Present

SEBAGO TECHNICS

207.200.2083 JSEYMOUR@SEBAGOTECHNICS.COM

DEREK H. CALDWELL, PE, PTOE

Transportation/Traffic Engineer



Mr. Caldwell joined Sebago Technics in 2016 as a Transportation/Traffic Engineer. He was previously employed by the Massachusetts Department of Transportation as a Traffic Engineer in the District Four office. Derek is a graduate of Worcester Polytechnic Institute with a B.S. in Civil Engineering and also has a M.S. in Transportation Engineering from the University of Massachusetts – Lowell.

He is proficient in the use of AutoCad, ArcGIS, Microstation, Synchro/SimTraffic and Vissim. Since joining the firm he has been actively involved in a variety of projects including traffic impact studies, traffic signal design, traffic signal operations, intersection design, and planning studies.

EXPERIENCE

Broadway at Evans Street and Lincoln Street – South Portland, ME: Design engineer for signal reconstruction project. Project involves two signalized intersections being modified from isolated to coordinated operation. Improvements are to address traffic operational efficiency as well as vehicle and pedestrian safety. Project completed under the MaineDOT Local Project Administration (LPA) program.

Route 108 Corridor Study – Dover, NH: Developed a VISSIM traffic simulation model to compare alternatives along an existing signalized corridor. The model contained multiple scenarios to include both signalized and roundabout traffic control.

Dirigo Plaza Off-Site Improvements – Portland/Westbrook, ME: Design of new traffic signals at five locations as part of mitigation for a major commercial development.

State of Maine Office Building – Augusta, ME: Traffic Impact Study for 125,000 square feet of new office space. Study including the analysis of an existing coordinated signal system.

383 Commercial Street – Portland, ME: Traffic Impact Study for hotel, residential and commercial mixed use development in Portland's Waterfront District. Study included alternatives analysis of proposed traffic signal configurations.

Municipal Peer Review Services– Portsmouth, Dover, Newington, and Somersworth, NH: Provide peer review of roadway plans and traffic studies for various municipalities.

CERTIFICATIONS

IMSA Work Zone Temporary Traffic Control Technician

ACI Concrete Field Testing Technician – Grade I

NETTCP Concrete Inspector

IMSA Traffic Signal Design/Engineering Technician Level II

IMSA Traffic Signal Construction Technician Level II

IMSA Traffic Signal Field Technician Level II

EDUCATION

Worcester Polytechnic Institute
Worcester, MA
B.S.,Civil Engineering, 2008

University of Massachusetts - Lowell
Lowell, MA
M.S., Civil Engineering - Transportation, 2013

MEMBERSHIPS

Institute of Transportation Engineers

REGISTRATIONS

Professional Engineer:
Maine #14400
Massachusetts #52626
New Hampshire #15272
Vermont #127175

Professional Traffic Operations Engineer #4273

SEBAGO TECHNICS

207.200.2053 DCALDWELL@SEBAGOTECHNICS.COM

SARAH A. HANF

Civil Engineer



Mrs. Hanf joined Sebago Technics, Inc. in 2017 as a Civil Engineer. With 7 years of experience in the civil engineering field Mrs. Hanf has been involved in a wide variety of projects in Maine and New Hampshire. Sarah has a vast experience within the education sector for primary and secondary schools. She has designed and permitted residential developments for private developers and college universities. Sarah has also been involved in private retail and commercial developments, municipal sewer separations and small roadway projects.

EXPERIENCE

Blueberry Lane Improvements – Falmouth, ME: Civil Engineer/Designer: Led the design team's efforts in coordinating with the Public Works Director and Town Engineer on a full-depth sidewalk reconstruction project with milling and overlay of 2800 LF of roadway in Blueberry Lane. Additional project work consisted of road-side parking spaces, lighting and utility upgrades. Sarah assisted the Town throughout the bidding process. The project is to be constructed this summer.

Bowdoin Park Row Residences – Brunswick, ME: Mrs. Hanf is currently working as a Civil Engineer/Designer for designing and permitting the addition of four three-story apartment buildings along Park Row on the Bowdoin Campus. Proposed site improvements supporting the housing consist of pedestrian walkways, patios, common areas, landscaping, and innovative stormwater treatment areas such as porous asphalt, permeable pavers and meadow basins.

The Residences at Clarks Pond – South Portland, ME: Mrs. Hanf was a lead engineer/assistant for designing and permitting a residential community consisting of four six-story residential buildings. Project work included site and parking layout, site circulation, and designated common areas. The proposed community had very particular requirements for utilities and it was determined that the use of subsurface soil filters would be needed for treatment due to site restrictions and portions of the property belonging to the Portland Water District.

Ottawa Road – Sewer Separation – South Portland, ME: Mrs. Hanf assisted in the phased sewer separation project in South Portland. Responsibilities included disconnecting foundation drains, trench drains to eliminate inflow, and repairing damages to reduce infiltration into the existing sanitary sewer system. Project work involved lining sewers mains, manholes, and repairing lateral connections, where damages were noted from video surveillance. Other project work involved drainage improvements, utility upgrades and resurfacing existing roadways.

Waterpark Expansion Phase II, Funtown/Splashtown USA - Saco, ME: Performed extensive site and stormwater drainage design and analysis for a water park expansion that included the addition of a restroom facility, restaurant, group event area, six new water slides, and a concrete deck for additional seating and lounging to obtain state environmental permitting. Project included careful selection and design of stormwater treatment in order to maximize usable space within the project boundary. Treatment included porous pavers, grassed underdrained soil filters and bioretention cells. Construction observation and construction administration tasks were also performed.

Falmouth Elementary School - Falmouth, ME: Civil engineer/design assistant for multi-year, multi-phase project including the complete redevelopment of an existing school campus and the construction of a 139,000 sf elementary school, including parking, circulation, community connectivity, and athletic fields. Site development constraints necessitated the use of innovative use of stormwater treatment methods to meet State requirements for stormwater runoff. Services included site selection and design, environmental permitting, creation of bidding documents, and construction administration.

EDUCATION

University of Maine, Orono, ME
Bachelor of Science,
Civil & Environmental Engineering
2007

CERTIFICATIONS

Maine DEP Certified BMP Inspector
(Pending)

MEMBERSHIPS

American Society of Civil Engineers
(ASCE)

SKILLS

AutoCAD – Civil 3D, HydroCAD,
SWMM Modeling, HEC-RAS

SEBAGO TECHNICS

207.200.2115 SHANF@SEBAGOTECHNICS.COM

DANIEL M. DANVERS

Landscape Designer



Mr. Danvers joined Sebago Technics, Inc. in 2017 as a Landscape Designer. Dan graduated from The University of Rhode Island with a degree in Landscape Architecture. Mr. Danvers previously worked at a landscape design-build firm in Rhode Island, where he worked on design teams to complete residential and commercial projects while managing construction and horticulture crews. Dan also has experience with concept drawings, planting plans renderings, construction documents, and attending Town meetings.

Dan is skilled in SketchUp, Adobe Suite, and has over 10 years working with AutoCAD.

EXPERIENCE

Residence - South Portland, Maine
As a part of a larger team Dan designed hardscape and landscape elements for a coastal residence in South Portland.

Summer Camp and Recreational Facilities - Auburn, Maine
Developed a master plan concept for a woodland camp for the YMCA. Included sports fields, outdoor classrooms, pool, accessible hiking, and mountain biking trails.

Hop Yard- Arundel, Maine
Designed a site plan for a hop yard, brewery and distillery in Arundel. Including circulation, crop, and building studies for the client.

Single Family House - Portland, Maine
Sited, graded, and prepared permit drawings for a single family house lot in Portland.

Car Dealership - Scarborough, Maine
Developed a site plan, conceptual grading, and application documents for a car dealership in Scarborough.

CMCC Field Enhancements - Auburn, Maine
Generated a 3D fly-over and renderings of proposed work on campus.

Days Inn - South Portland, Maine
Performed analysis and conceptualization of site improvements and re-development of the existing hotel.

Apartment Complex Landscape - South Portland, Maine
As a part of a larger team, developed planting plan and landscape drawings for a proposed apartment complex in South Portland.

EDUCATION

University of Rhode Island
Kingston, RI

Bachelors of Landscape Architecture
2014

CERTIFICATIONS

Rhode Island Certified Horticulturist
Rhode Island Nursery and Landscape Association, 2015

Certified Invasive Manager
Rhode Island Coastal Resource Management Council, 2016

AFFILIATIONS

Rhode Island Nursery and Landscape Associations, Executive Board Member 2016 - 2018

American Society of Landscape Architects 2012 - Present

Portland Society of Architects
Member 2017 - Present

Maine Chapter of the American Society of Landscape Architects
2017 - Present

SEBAGO TECHNICS

207.200.2125 DDANVERS@SEBAGOTECHNICS.COM

CHARLES D. MARCHESE, PLS

Director of Survey Operations



Mr. Marchese has over 40 years of experience in the land surveying field with an emphasis on boundary and engineering related projects. He joined Sebago Technics in November of 2009 after eighteen years with Civil Consultants as a survey project manager. Since joining Sebago Technics, Mr. Marchese has assisted with field and office duties relating to private, residential and public works projects. In his role as a Director, he continues to manage his survey team and provide the experience and knowledge necessary to provide quality and timely survey work to a wide variety of clients.

EXPERIENCE

During 1991 to 2009 while employed at Civil Consultants, Charlie worked on an assortment of boundary retracement surveys for various government agencies. This work included thirty-three miles of United States Forest Service boundary retracement in Lovell, Stoneham, Gilead and Bethel, Maine. Boundary work for the United States Fish and Wildlife Service comprised surveys for the acquisition of tracts for addition to the many refuges located throughout Maine and New Hampshire. The bulk of this work involved the establishment of the Lake Umbagog National Wildlife Refuge located in Errol, New Hampshire and localities along the shores of Lake Umbagog and its many waterways. This project ultimately surveyed in excess of 30,000 acres for inclusion within the National Wildlife Refuge System.

During the summers of 1994 through 1996 Charlie was the party chief for survey crews working on approximately 30 miles of boundary corridor survey along the Appalachian Trail for the National Park Service. This work involved surveying and monumenting the actual ownership lines of the lands surrounding the trail and other scenic areas owned by the National Park Service.

Charlie was the project surveyor, subcontracted through Sebago Technics, for the boundary and topographic survey associated with the Sanford, Maine site for the new Wal-Mart and Lowe's stores. He was responsible for the layout of the Wal-Mart site for Cleveland Construction throughout the building phase of the project. He has an extensive background in construction layout ranging from residential development to large scale retail and public works projects.

EDUCATION

The University of Maine, Orono, ME

Established 60 credit hours towards Bachelor of Science in Civil Engineering, 1976

Attended Business Administration classes University of Maine, Portland

Annual seminars and meetings pertaining to survey topics current to continuing practice

CERTIFICATIONS

OSHA 10-hour Construction Safety and Health

MEMBERSHIPS

Maine Society of Land Surveyors

National Society of Professional Land Surveyors

REGISTRATIONS

Professional Land Surveyor: Maine #2009

SEBAGO TECHNICS

207.200.2069 CMARCHESE@SEBAGOTECHNICS.COM

35: Signage and Wayfinding (14-526(d)8), if applicable

- Signage plan showing the location, dimensions, height and setback of all existing and proposed signs. Signs in Historic Districts are reviewed by Historic Preservation staff
- Proposed commercial and directional signage on site

All signage will meet applicable requirements of Division 22 of the City Code and the additional provisions of this section. The proposed directional signage table and locations are shown on the enclosed site plans.

Project identification signage has not been finalized and will be submitted under separate cover.

10: Transportation Analysis – Traffic Impact (14-526(a)1)

- Provisions for pedestrian, bicycle, vehicle, and loading circulation and incremental volume of traffic impacts.

    1. In accordance with Transportation Standards – Impacts on Surrounding Street Systems, provision has been made for vehicle loading, unloading and parking and for vehicular and pedestrian circulation on the site and onto Forest Avenue. Please see the attached site plans for additional circulation information.

- Traffic Impact Study (Technical Manual, Section 1), if applicable.

  Supplemental information, Section 7 Traffic Study dated April 22, 2019.

SEBAGO TECHNICS

CIVIL ENGINEERING ▪ SURVEYING ▪ LANDSCAPE ARCHITECTURE

Section 7 Traffic Study Supplemental Information

Chau Property Development
1884 Forest Avenue
Portland, Maine 04074

Applicant:
Phuong Neang
75 Arcadia Street
Portland, Maine 04103

Prepared By:
Sebago Technics, Inc.
75 John Roberts Road, Suite 4A
South Portland, Maine 04106

April 22, 2019

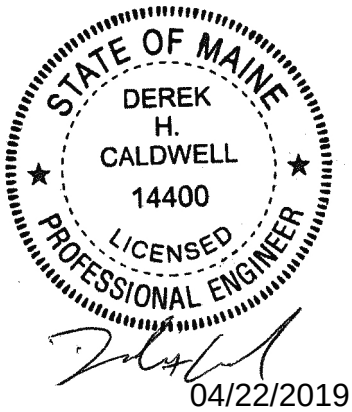

This document provides information supplemental to the previously submitted Traffic Movement Permit Sections 1-7, Revision 1 dated March 13, 2019 for the proposed convenience store/gas station and general retail development at 1884 Forest Avenue in Portland. This supplemental information is provided as discussed at the meeting held with City Staff and the Applicant on March 13, 2019.

Site Driveway Alternative Configurations

The development is currently proposed to have three driveways. This includes one full access drive on Riverton Drive, an entrance only-drive on Forest Avenue and a right-turn only exit drive on Forest Avenue. This driveway configuration was evaluated as part of the previously submitted study dated March 13, 2019. As requested, we have also evaluated two alternative configurations, in addition to the proposed configuration:

Proposed - Entrance Drive and Right-Out Only Drive on Forest Avenue.
Alternative 1 - Right Turn In/Right Turn Out drive on Forest Avenue
Alternative 2 - One Full Access Drive on Forest Avenue

Under both scenarios the Riverton Drive access remains. In addition, the analysis assumes that Riverton Drive would have a left and right turn lane at the intersection with Forest Avenue. A left turn lane on Forest Avenue for the site driveway (applicable to the proposed and Alternative 2 scenarios) is also included. Attached is a warrant analysis sheet for the proposed left turn lane.

The following tables show the results of the capacity and queueing analysis for the site driveways as well as the intersection of Forest Avenue and Riverton Drive. Trip distribution remained consistent with the previous submission. Slight modifications were made for each driveway alternative. For Alternative 1, all left turns into the site would use Riverton Drive. In Alternative 2, left turns out of the site were assumed to be split evenly between using Riverton Drive and using the site driveway on Forest Avenue.

Table 1 – Capacity Analysis Summary
Forest Avenue at Riverton Drive (unsignalized)
AM Peak Hour

	Proposed		Alt 1		Alt 2	
Movement	**Delay (s/veh)**	**LOS**	**Delay (s/veh)**	**LOS**	**Delay (s/veh)**	**LOS**
AM PEAK HOUR						
Forest Ave EB TH	2	A	3	A	2	A
Forest Ave EB RT	1	A	1	A	1	A
Forest Ave WB LT	9	A	12	B	11	B
Forest Ave WB TH	0	A	1	A	0	A
Riverton Dr NB LT	22	C	28	D	20	C
Riverton DR NB RT	11	B	13	B	11	B
PM PEAK HOUR						
Forest Ave EB TH	2	A	3	A	2	A
Forest Ave EB RT	1	A	1	A	1	A
Forest Ave WB LT	8	A	10	A	9	A
Forest Ave WB TH	1	A	1	A	1	A
Riverton Dr NB LT	25	C	33	D	26	D
Riverton DR NB RT	9	A	8	A	8	A
SATURDAY PEAK HOUR						
Forest Ave EB TH	2	A	2	A	2	A
Forest Ave EB RT	1	A	1	A	1	A
Forest Ave WB LT	7	A	9	A	6	A
Forest Ave WB TH	0	A	1	A	0	A
Riverton Dr NB LT	18	C	35	D	17	C
Riverton DR NB RT	7	A	7	A	9	A

Table 2 – Capacity Analysis Summary
Forest Avenue at Site Driveway (unsignalized)

	Proposed		Alt 1		Alt 2	
Movement	Delay (s/veh)	LOS	Delay (s/veh)	LOS	Delay (s/veh)	LOS
AM PEAK HOUR						
Forest Ave EB TH	2	A	2	A	2	A
Forest Ave EB RT	1	A	1	A	1	A
Forest Ave WB LT	11	B			9	A
Forest Ave WB TH	3	A			3	A
Site NB LT					23	C
Site NB RT	9	A	9	A	11	B
PM PEAK HOUR						
Forest Ave EB TH	2	A	2	A	2	A
Forest Ave EB RT	1	A	1	A	1	A
Forest Ave WB LT	9	A			10	A
Forest Ave WB TH	4	A			4	A
Site NB LT					24	C
Site NB RT	8	A	7	A	10	A
SATURDAY PEAK HOUR						
Forest Ave EB TH	2	A	2	A	2	A
Forest Ave EB RT	1	A	1	A	1	A
Forest Ave WB LT	9	A			9	A
Forest Ave WB TH	3	A			3	A
Site NB LT					17	A
Site NB RT	7	A	6	A	7	A

Table 3 – Capacity Analysis Summary
Riverton Drive at Site Driveway (unsignalized)

	Proposed		Alt 1		Alt 2	
Movement	Delay (s/veh)	LOS	Delay (s/veh)	LOS	Delay (s/veh)	LOS
AM PEAK HOUR						
Riverton Dr NB TH	0	A	0	A	0	A
Riverton Dr SB LT	0	A	2	A	0	A
Riverton Dr SB TH	0	A	1	A	0	A
Site WB RT	3	A	3	A	2	A
PM PEAK HOUR						
Riverton Dr NB TH	0	A	0	A	0	A
Riverton Dr SB LT	0	A	1	A	0	A
Riverton Dr SB TH	0	A	1	A	0	A
Site WB RT	3	A	3	A	3	A
SATURDAY PEAK HOUR						
Riverton Dr NB TH	0	A	1	A	0	A
Riverton Dr SB LT	0	A	1	A	0	A
Riverton Dr SB TH	0	A	1	A	0	A
Site WB RT	3	A	3	A	2	A

The currently proposed driveway configuration as well as Alternative 2 (Full Access Drive on Forest Avenue) would result in similar delay and level-of-service for the site intersections and the intersection of Forest Avenue at Riverton Drive. Alternative 1 (right-in/right-out only) would result in an increase in delay on Riverton Drive, a result of all traffic turning left to enter or exit the site needing to use this approach.

The proposed configuration would not introduce a new conflict point on Forest Avenue for left turning traffic exiting from the site. This would limit left turns exiting the site to the existing intersection of Forest Avenue and Riverton Drive, which is not identified as a high crash location. Allowing for a third curb-cut accessing the site (two on Forest Avenue) would enable traffic entering the site and right-turning traffic exiting the site to Forest avenue to be separated. If these movements were to be combined in a single two-way driveway, it would be more difficult to restrict traffic from turning left out of the site driveway. The separate exit driveway geometry can be designed to discourage left turn movements. The entrance driveway would contain clear signage internal to the site to prohibit vehicles from exiting the site and rather be directed to either Riverton Drive or the proposed right-out only driveway.

The following tables show the calculated 95th percentile queue in feet for the three different driveway configuration scenarios.

Table 4 – Queueing Summary
Riverton Drive at Forest Avenue (unsignalized)

	Proposed	Alt 1	Alt 2
LANE	**95th Queue (FT)**	**95th Queue (FT)**	**95th Queue (FT)**
AM PEAK HOUR			
Forest Ave WB LT	47	81	55
Riverton Dr NB LT	93	92	75
Riverton Dr NB RT	81	84	83
PM PEAK HOUR			
Forest Ave WB LT	31	72	32
Riverton Dr NB LT	83	96	72
Riverton Dr NB RT	50	50	54
SATURDAY PEAK HOUR			
Forest Ave WB LT	30	68	30
Riverton Dr NB LT	85	89	59
Riverton Dr NB RT	39	40	37

Table 5– Queueing Summary
Site Driveway at Forest Avenue (unsignalized)

	Proposed	Alt 1	Alt 2
LANE	**95th Queue (FT)**	**95th Queue (FT)**	**95th Queue (FT)**
AM PEAK HOUR			
Forest Ave WB LT	52		40
Site Dr NB RT(LT)	60	59	71
PM PEAK HOUR			
Forest Ave WB LT	52		58
Site Dr NB RT(LT)	54	58	82
SATURDAY PEAK HOUR			
Forest Ave WB LT	57		58
Site Dr NB RT(LT)	53	58	75

Table 6– Queueing Summary
Site Driveway at Riverton Drive (unsignalized)

	Proposed	Alt 1	Alt 2
LANE	**95th Queue (FT)**	**95th Queue (FT)**	**95th Queue (FT)**
AM PEAK HOUR			
Site WB LTRT	51	50	36
PM PEAK HOUR			
Site WB LTRT	52	50	47
SATURDAY PEAK HOUR			
Site WB LTRT	53	49	44

Crash Data

As indicated in the submitted Section 7 study, there are two high crash locations in the vicinity of the project. These included the intersection of Forest Avenue and Riverside Street as well as the segment of Forest Avenue between Riverside Street and Riverton Drive.

The majority of crashes at the intersection of Forest Avenue and Riverside Street were rear end collisions, likely the result of traffic congestion on all approaches. On the segment of Forest Avenue between Riverside Street and Riverton Drive the detailed crash data indicates a majority of crashes caused by vehicles entering or exiting the 7 Eleven store on the corner of Riverside Street and Forest Avenue. Crashes were a result of vehicles exiting the store driveways turning left failing to yield to oncoming traffic, as well as rear end collisions involving a vehicle waiting to turn left into the store. There is not an auxiliary left-turn lane at this location.

Forest Avenue at Riverside Street Recommendations

We have evaluated the existing signalized intersection of Forest Avenue at Riverside Street to determine if any improvements could be made to relieve the existing congestion, and therefore potentially decrease the rate of rear-end collisions. In looking at the existing traffic volumes and lane usage, there may be an opportunity to increase capacity for the Forest Avenue eastbound approach. Currently this approach consists on one left turn lane, one thru lane, and one shared thru-right turn lane. Traffic volumes on this approach were shown to be most critical during the AM Peak Hour. Traffic volumes were found to be approximately equal for both thru and right-turning movements on this approach.

Immediately to the east of the intersection, Forest Avenue reduces to one travel lane. This immediate lane drop may cause for imbalanced lane utilization on the approach, with more thru vehicles favoring the left thru lane. It was also observed during the winter months that the right most lane on the exiting approach was not fully plowed, resulting in the roadway functioning as a single lane. Based on the existing traffic volumes and the observed imbalanced lane utilization, it may be beneficial to modify the lane use to be one left turn lane, one thru lane, and one right turn lane. If this were modified to include a right-turn only lane, then the signal equipment and phasing could also be modified to support an overlap to allow Forest Avenue eastbound right turn traffic to have a protected movement when the Riverside Street northbound left bound phase is active.

The following table shows the results of the capacity analysis showing the delay and level-of-service under 2022 Build conditions with no modifications to the signal and an alternative with the aforementioned phasing changes as well as signal timing optimization. As can be seen, multiple movements would still experience failing level-of-service during both the AM and PM Peak Hours. Overall intersection delay would be reduced.

Table 7 – Capacity Analysis Summary
Riverton Drive at Site Driveway (unsignalized)

	2023 AM		2023 AM ALT		2023 PM		2023 PM ALT	
Movement	Delay (s/veh)	LOS	Delay (s/veh)	LOS	Delay (s/veh)	LOS	Delay (s/veh)	LOS
Forest Ave EB LT	158	F	130	F	63	E	85	F
Forest Ave EB TH	142	F	125	F	38	D	71	E
Forest Ave EB RT	139	F	103	F	35	D	23	C
Forest Ave WB LT	56	E	48	D	61	E	85	F
Forest Ave WB TH	21	C	22	C	29	C	48	D
Forest Ave WB RT	14	B	13	B	22	C	46	D
Riverside St NB LT	66	E	53	D	359	F	107	F
Riverside St NB TH	49	D	36	D	184	F	83	F
Riverside St NB RT	37	D	26	C	173	F	75	E
Riverside St SB LT	67	E	49	D	112	F	163	F
Riverside St SB TH	50	D	43	D	89	F	151	F
Riverside St SB RT	12	B	10	A	58	E	119	F
Intersection	92	F	77	E	96	F	83	F

Appendix A
Traffic Volume Figures

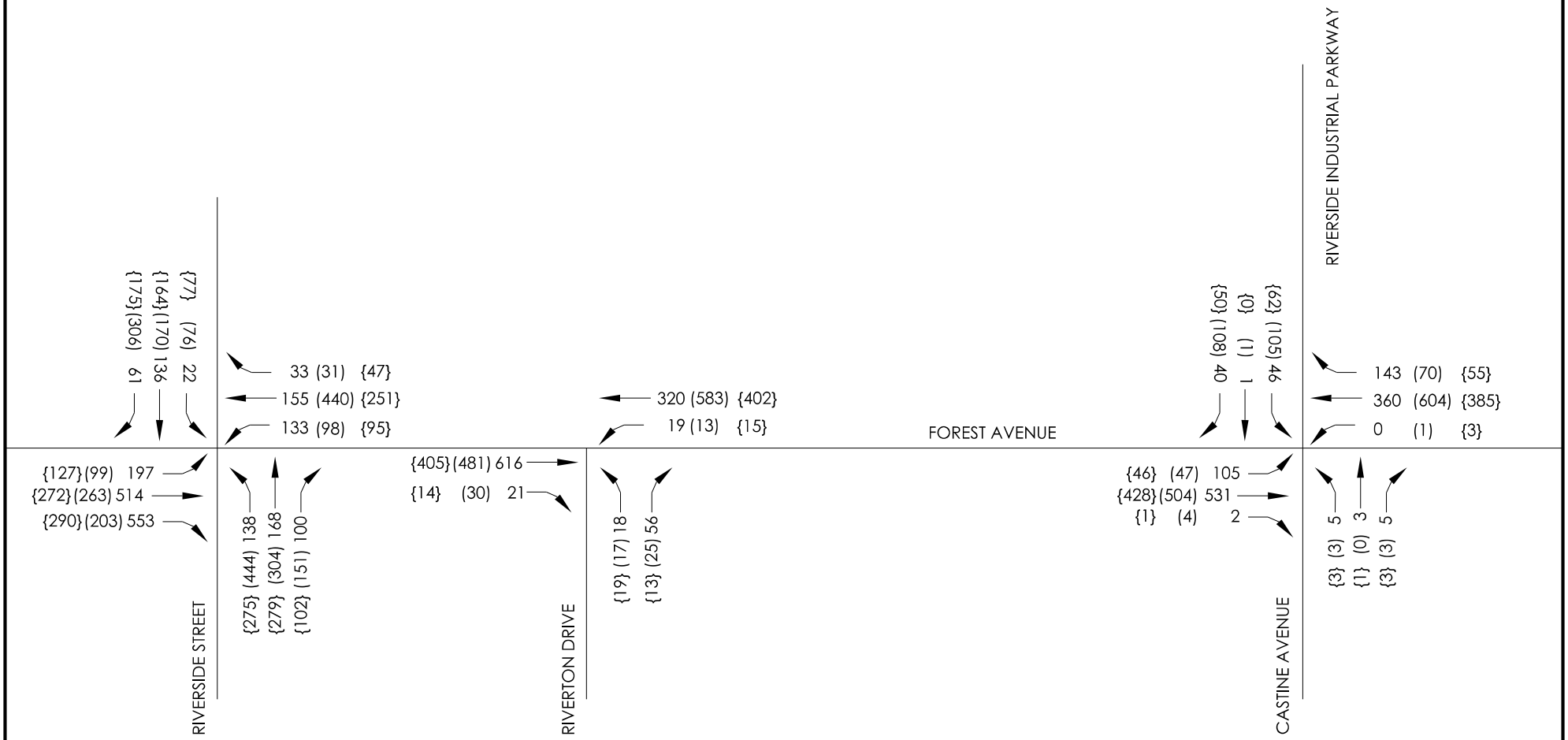

LEGEND

XX = AM PEAK HOUR
(XX) = PM PEAK HOUR
{XX} = SAT PEAK HOUR

NOTES:

TRAFFIC VOLUMES RECORDED THURSDAY 1/31/2019, SATURDAY 2/2/2019 AND SATURDAY 2/9/2019.

SEBAGO TECHNICS
WWW.SEBAGOTECHNICS.COM
75 John Roberts Rd.
Suite 4A
South Portland, ME 04106
Tel. 207-200-2100

2019 EXISTING TRAFFIC VOLUMES

OF: ROUTE 302 (FOREST AVENUE)

SCALE: N.T.S

DATE: 02/19/2019

LOCATION:
1884 FOREST AVENUE
PORTLAND, MAINE

FOR:
JOHN CHAU
75 ARCADIA STREEET
PORTLAND, MAINE 04103

SHEET:
1 OF 9

...\DGN\11142_Traffic_Diagrams.dgn

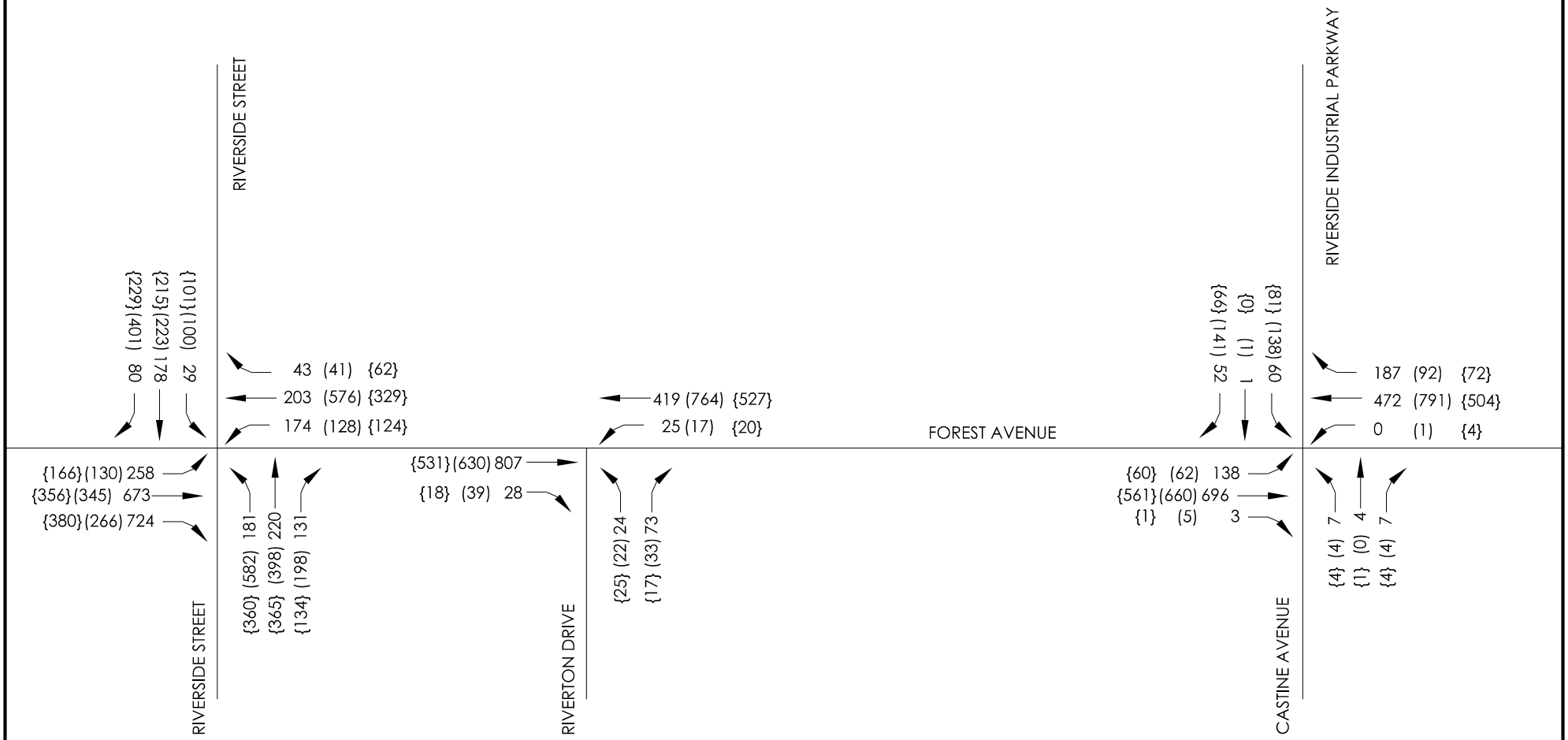

LEGEND

XX = AM PEAK HOUR
(XX) = PM PEAK HOUR
{XX} = SAT PEAK HOUR

NOTES:

VOLUMES SHOWN IN FIGURE 1 ADJUSTED USING MAINEDOT WEEKLY GROUP MEAN FACTORS TO A FACTOR OF 1.31 (1.31/0.84)

SEBAGO TECHNICS
WWW.SEBAGOTECHNICS.COM
75 John Roberts Rd.
Suite 4A
South Portland, ME 04106
Tel. 207-200-2100

2019 ADJUSTED TRAFFIC VOLUMES

OF: ROUTE 302 (FOREST AVENUE)

SCALE: N.T.S

DATE: 02/19/2019

LOCATION:
1884 FOREST AVENUE
PORTLAND, MAINE

FOR:
JOHN CHAU
75 ARCADIA STREEET
PORTLAND, MAINE 04103

SHEET:
2 OF 9

...\DGN\11142_Traffic_Diagrams.dgn

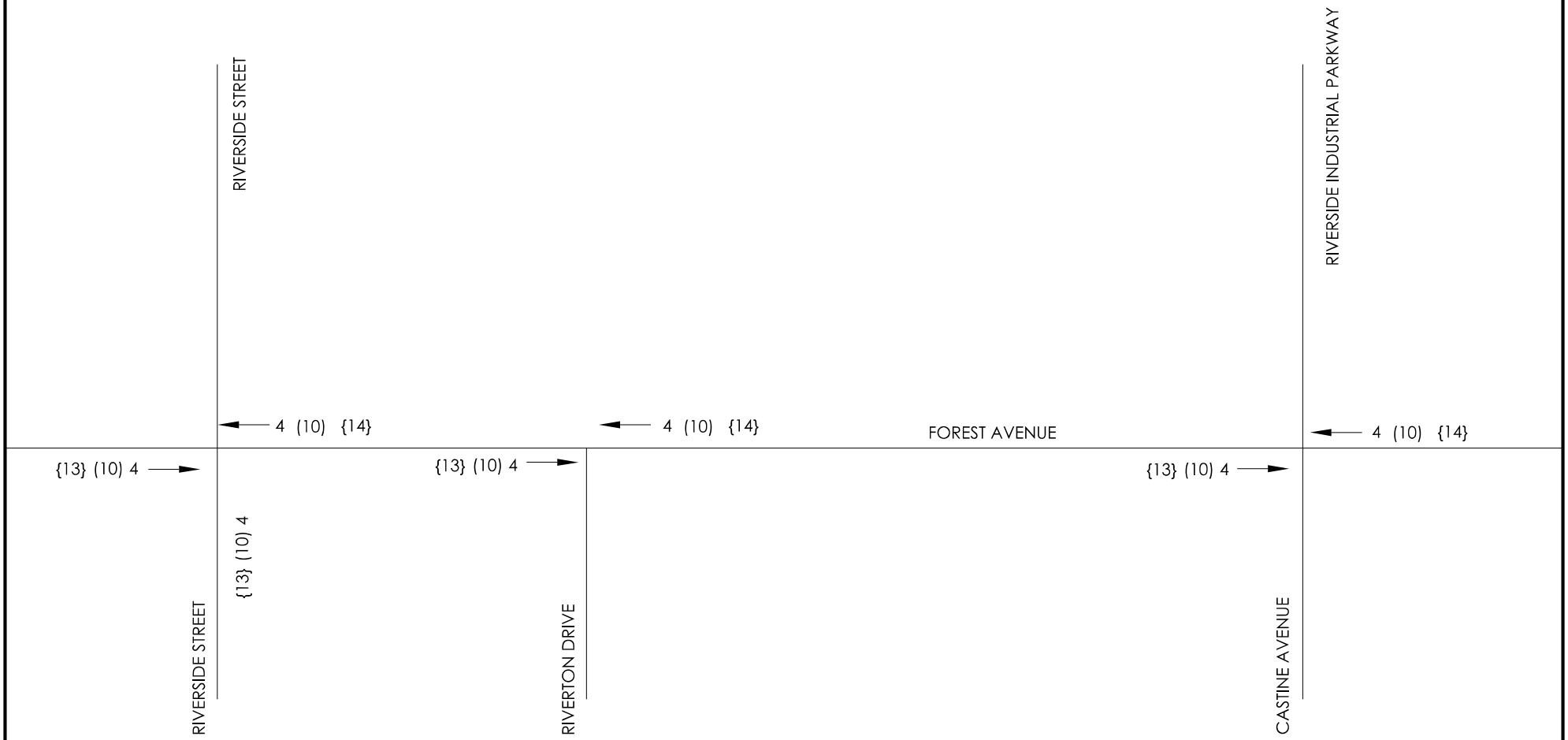

LEGEND

XX = AM PEAK HOUR
(XX) = PM PEAK HOUR
{XX} = SAT PEAK HOUR

NOTES:

TRIP ENDS SHOWN REPRESENT TRIP ASSIGNMENTS FROM THE UNBUILT PORTIONS OF THE FOLLOWING APPROVED DEVELOPMENTS:

DIRIGO PLAZA
1884 FOREST AVENUE

SEBAGO TECHNICS
WWW.SEBAGOTECHNICS.COM
75 John Roberts Rd.
Suite 4A
South Portland, ME 04106
Tel. 207-200-2100

OTHER DEVELOPMENT TRIPS

OF: ROUTE 302 (FOREST AVENUE)

LOCATION:
1884 FOREST AVENUE
PORTLAND, MAINE

FOR:
JOHN CHAU
75 ARCADIA STREEET
PORTLAND, MAINE 04103

SCALE: N.T.S

DATE: 02/19/2019

SHEET:
3 OF 9

...\DGN\11142_Traffic_Diagrams.dgn

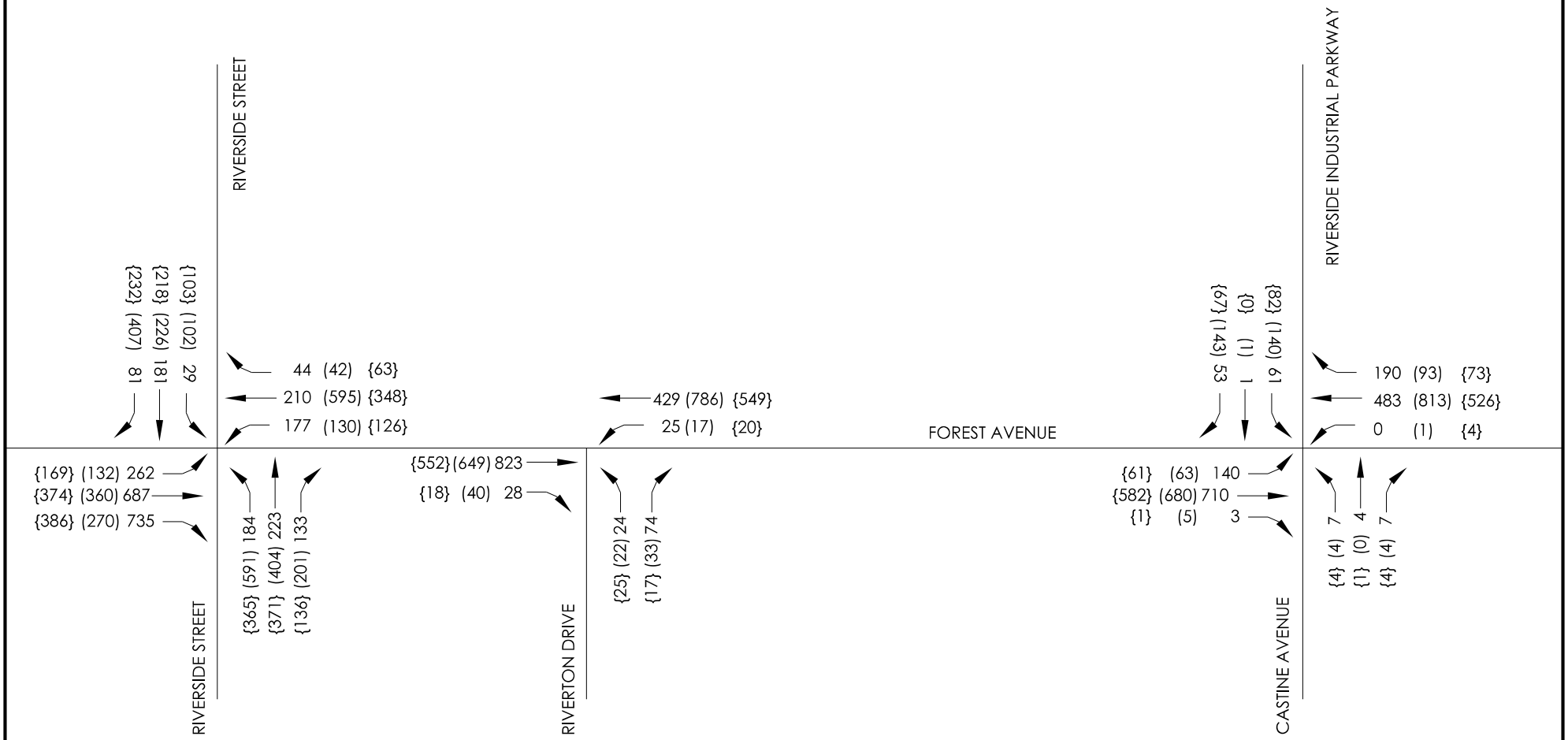

LEGEND

XX = AM PEAK HOUR
(XX) = PM PEAK HOUR
{XX} = SAT PEAK HOUR

NOTES:

VOLUMES SHOWN IN FIGURE 2 ADJUSTED USING A 1.0% ANNUAL GROWTH FACTOR.

SEBAGO TECHNICS
WWW.SEBAGOTECHNICS.COM
75 John Roberts Rd.
Suite 4A
South Portland, ME 04106
Tel. 207-200-2100

2022 NO-BUILD TRAFFIC VOLUMES

OF: ROUTE 302 (FOREST AVENUE)

SCALE: N.T.S

DATE: 02/19/2019

LOCATION:
1884 FOREST AVENUE
PORTLAND, MAINE

FOR:
JOHN CHAU
75 ARCADIA STREEET
PORTLAND, MAINE 04103

SHEET:
4 OF 9

...\DGN\11142_Traffic_Diagrams.dgn

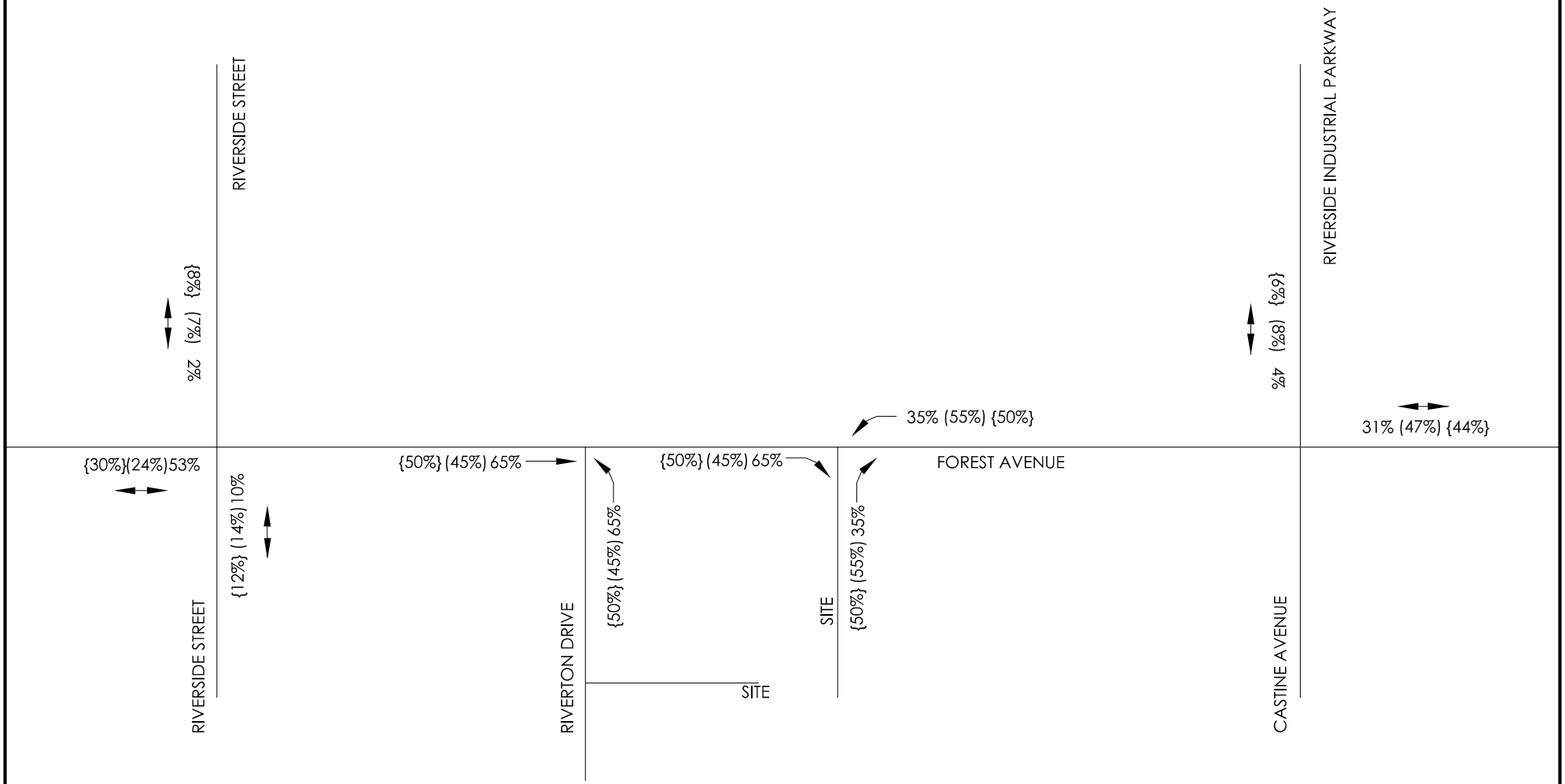

LEGEND

XX = AM PEAK HOUR
(XX) = PM PEAK HOUR
{XX} = SAT PEAK HOUR

NOTES:

SEBAGO TECHNICS
WWW.SEBAGOTECHNICS.COM
75 John Roberts Rd.
Suite 4A
South Portland, ME 04106
Tel. 207-200-2100

TRIP ASSIGNMENT PERCENTAGE

OF: ROUTE 302 (FOREST AVENUE)

LOCATION:
1884 FOREST AVENUE
PORTLAND, MAINE

FOR:
JOHN CHAU
75 ARCADIA STREEET
PORTLAND, MAINE 04103

SCALE: N.T.S

DATE: 02/19/2019

SHEET:
5 OF 9

...\DGN\11142_Traffic_Diagrams.dgn

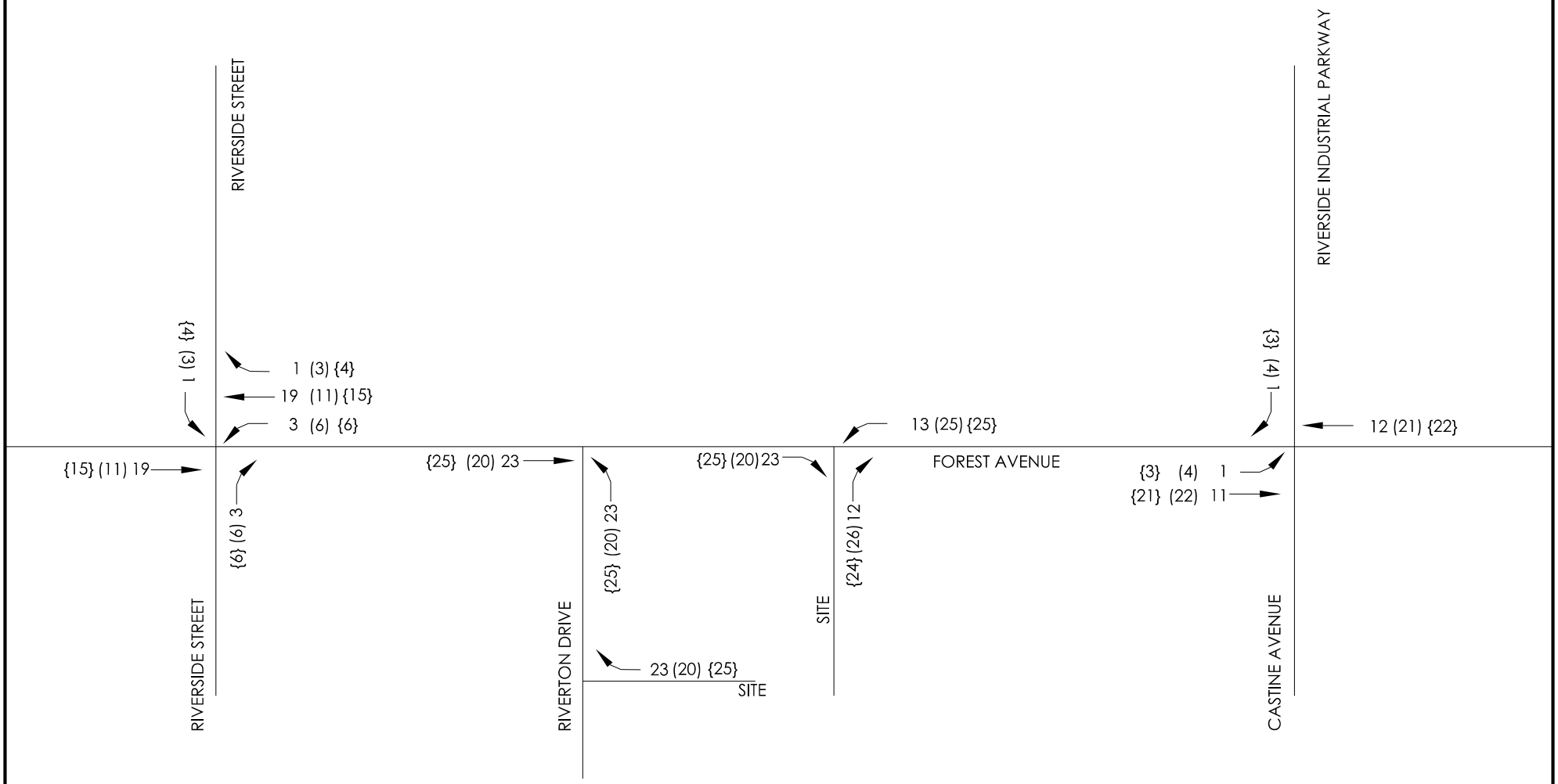

LEGEND

XX = AM PEAK HOUR
(XX) = PM PEAK HOUR
{XX} = SAT PEAK HOUR

PRIMARY TRIPS

	Total	Enter	Exit
AM Peak Hour of Adjacent Street (7-9 AM	71	36	35
PM Peak Hour of Adjacent Street (4-6 PM)	91	45	46
Saturday Peak Hour	99	50	49

SEBAGO TECHNICS
WWW.SEBAGOTECHNICS.COM
75 John Roberts Rd.
Suite 4A
South Portland, ME 04106
Tel. 207-200-2100

TRIP ASSIGNMENT - PRIMARY TRIPS

OF: ROUTE 302 (FOREST AVENUE)

SCALE: N.T.S

DATE: 02/19/2019

LOCATION:
1884 FOREST AVENUE
PORTLAND, MAINE

FOR: JOHN CHAU
75 ARCADIA STREEET
PORTLAND, MAINE 04103

SHEET: 6 OF 9

...\DGN\11142_Traffic_Diagrams.dgn

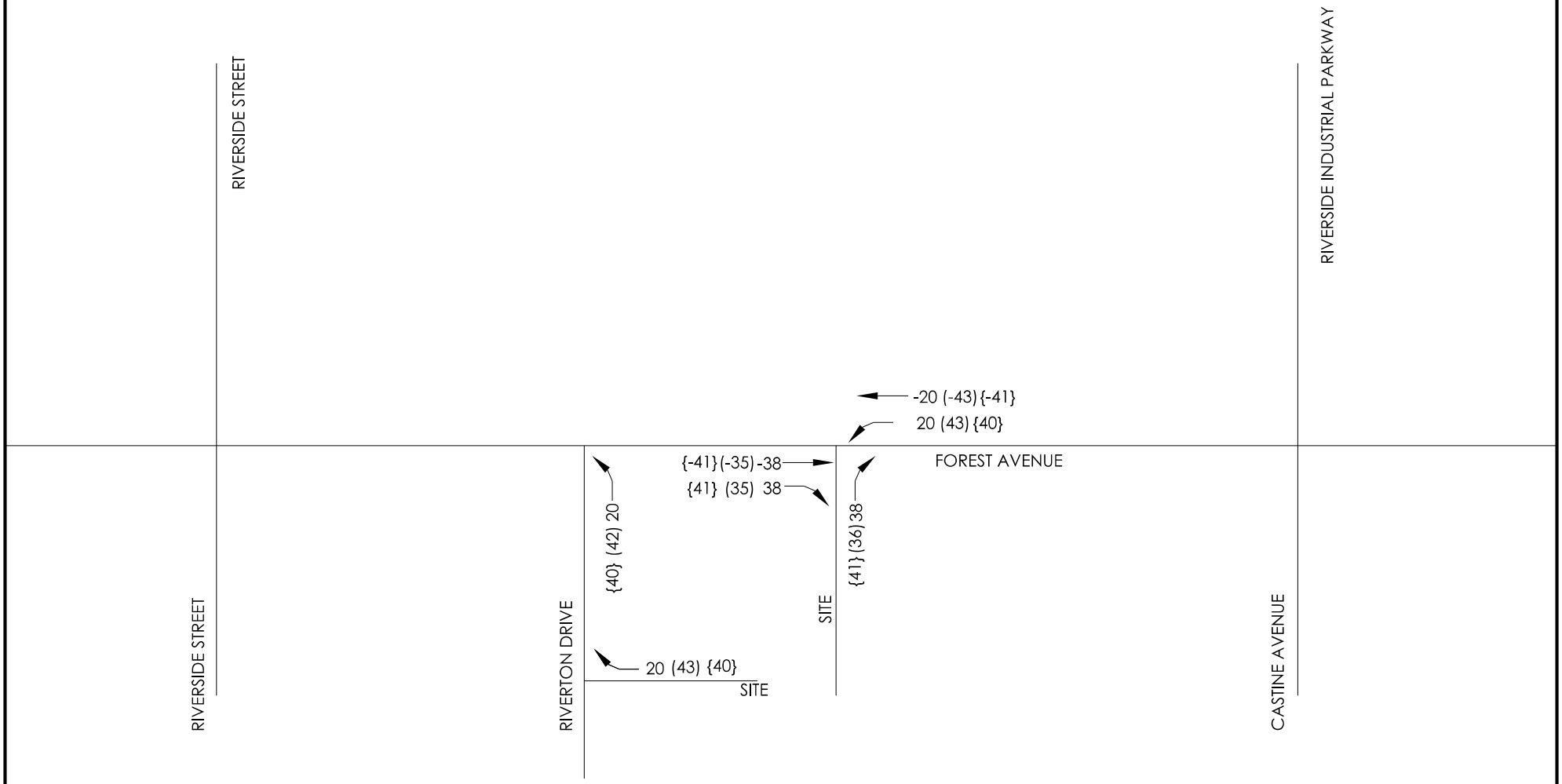

PASS-BY TRIPS

			20	Total	Enter	Exit
AM Peak Hour of Adjacent Street (7-9 AM				116	58	58
PM Peak Hour of Adjacent Street (4-6 PM				156	78	78
Saturday Peak Hour				162	81	81

LEGEND

XX = AM PEAK HOUR
(XX) = PM PEAK HOUR
{XX} = SAT PEAK HOUR

SEBAGO TECHNICS
WWW.SEBAGOTECHNICS.COM
75 John Roberts Rd.
Suite 4A
South Portland, ME 04106
Tel. 207-200-2100

TRIP ASSIGNMENT - PASS-BY TRIPS

OF: ROUTE 302 (FOREST AVENUE)

SCALE: N.T.S

DATE: 02/19/2019

LOCATION:
1884 FOREST AVENUE
PORTLAND, MAINE

FOR:
JOHN CHAU
75 ARCADIA STREEET
PORTLAND, MAINE 04103

SHEET:
7 OF 9

...\DGN\11142_Traffic_Diagrams.dgn

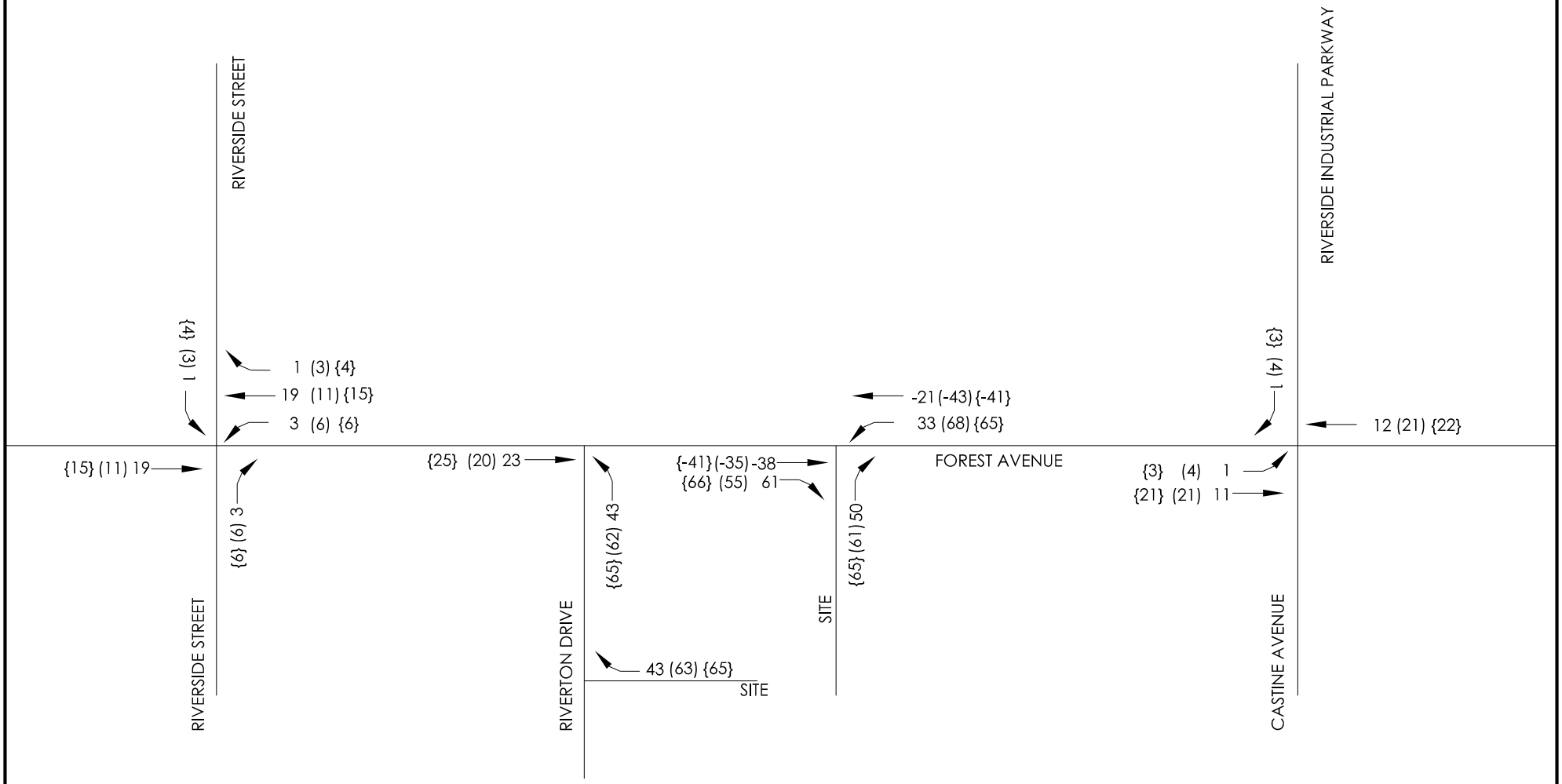

LEGEND

XX = AM PEAK HOUR
(XX) = PM PEAK HOUR
{XX} = SAT PEAK HOUR

NOTE:

VOLUMES FOUND BY ADDING VALUES SHOWN IN FIGURES 6 AND 7.

SEBAGO TECHNICS
WWW.SEBAGOTECHNICS.COM
75 John Roberts Rd.
Suite 4A
South Portland, ME 04106
Tel. 207-200-2100

TRIP ASSIGNMENT - TOTAL

OF: ROUTE 302 (FOREST AVENUE)

SCALE: N.T.S

DATE: 02/19/2019

LOCATION:
1884 FOREST AVENUE
PORTLAND, MAINE

FOR:
JOHN CHAU
75 ARCADIA STREEET
PORTLAND, MAINE 04103

SHEET:
8 OF 9

...\DGN\11142_Traffic_Diagrams.dgn

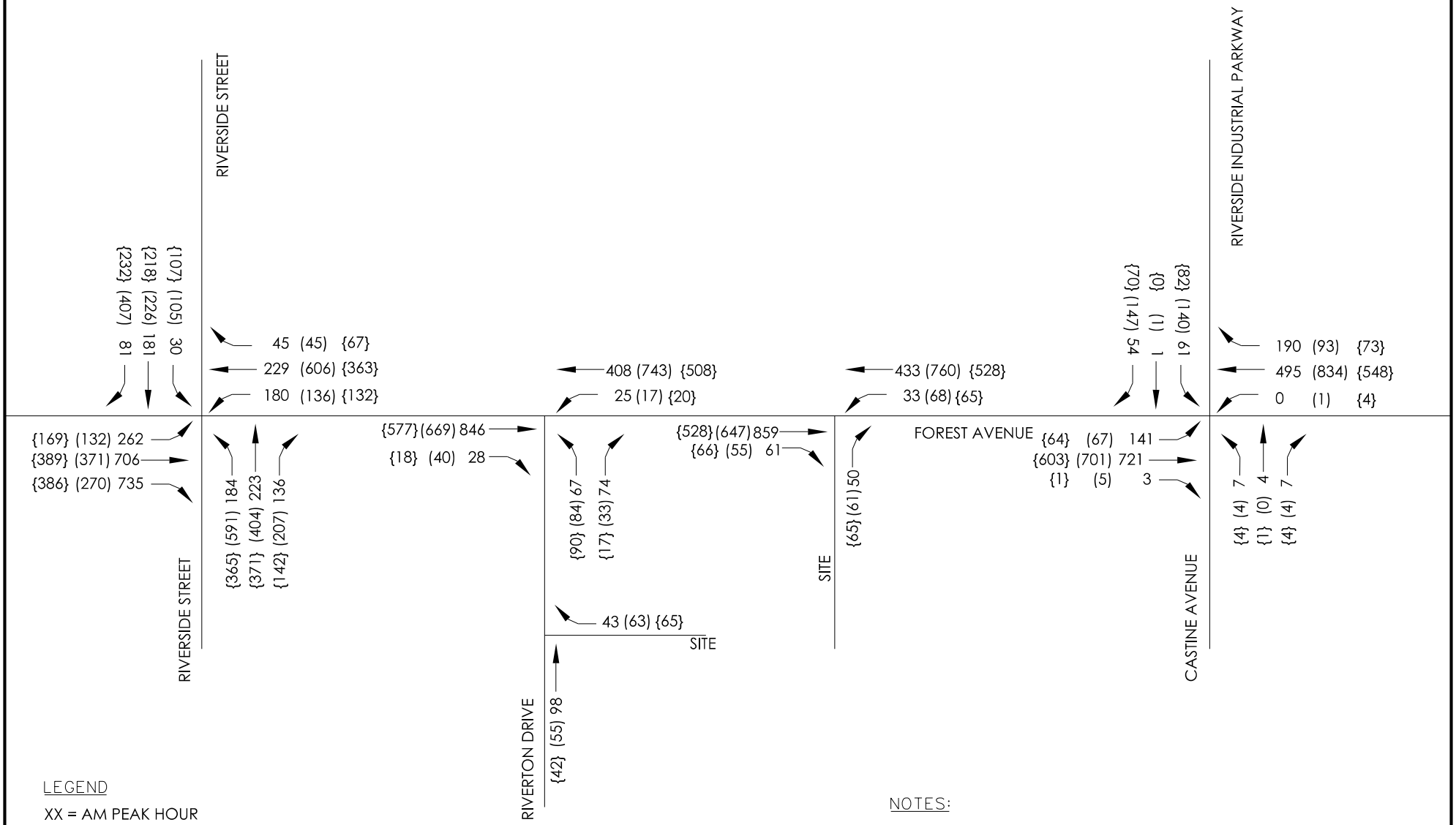

LEGEND

XX = AM PEAK HOUR
(XX) = PM PEAK HOUR
{XX} = SAT PEAK HOUR

NOTES:

VOLUMES SHOWN BY ADDING VALUES IN FIGURES 4 AND 8.

SEBAGO TECHNICS
WWW.SEBAGOTECHNICS.COM
75 John Roberts Rd.
Suite 4A
South Portland, ME 04106
Tel. 207-200-2100

2022 BUILD TRAFFIC VOLUMES

OF: ROUTE 302 (FOREST AVENUE)

SCALE: N.T.S

DATE: 02/19/2019

LOCATION:
1884 FOREST AVENUE
PORTLAND, MAINE

FOR:
JOHN CHAU
75 ARCADIA STREEET
PORTLAND, MAINE 04103

SHEET:
9 OF 9

...\DGN\11142_Traffic_Diagrams.dgn

Appendix C
SimTraffic Reports

3: Riverside St & Forest Ave Performance by movement

Movement	EBL	EBT	EBR	WBL	WBT	WBR	NBL	NBT	NBR	SBL	SBT	SBR
Denied Del/Veh (s)	3.4	1.7	1.7	0.7	0.3	0.5	424.0	407.3	401.5	4.3	2.4	4.4
Total Del/Veh (s)	74.9	49.7	47.2	54.3	28.1	23.4	271.9	202.7	194.4	71.8	58.0	24.7

3: Riverside St & Forest Ave Performance by movement

Movement	All
Denied Del/Veh (s)	125.8
Total Del/Veh (s)	96.1

6: Riverton Dr & Forest Ave Performance by movement

Movement	EBT	EBR	WBL	WBT	NBL	NBT	NBR	All
Denied Del/Veh (s)	0.0	0.0	0.0	0.0	0.1	0.0	0.0	0.0
Total Del/Veh (s)	1.7	0.8	6.7	0.4	17.6	0.3	7.3	2.5

9: Castine Ave/Riverside Industrial & Forest Ave Performance by movement

Movement	EBL	EBT	EBR	WBL	WBT	WBR	NBL	NBT	NBR	SBL	SBR	All
Denied Del/Veh (s)	0.5	0.1	0.0	0.4	0.5	0.5	0.1	0.1	0.1	0.3	3.8	0.5
Total Del/Veh (s)	11.6	6.3	2.5	13.8	7.6	5.0	31.5	50.5	11.3	34.5	10.2	9.0

12: Site & Forest Ave Performance by movement

Movement	EBT	EBR	WBL	WBT	NBR	All
Denied Del/Veh (s)	0.0	0.0	0.0	0.0	0.1	0.0
Total Del/Veh (s)	1.5	0.5	8.8	2.5	6.5	2.5

14: Riverton Dr & Site Performance by movement

Movement	WBR	NBT	SBT	All
Denied Del/Veh (s)	0.2	0.1	0.0	0.1
Total Del/Veh (s)	2.5	0.1	0.3	1.2

Total Zone Performance

Denied Del/Veh (s)	106.6
Total Del/Veh (s)	1223.5

Intersection: 3: Riverside St & Forest Ave

Movement	EB	EB	EB	WB	WB	WB	NB	NB	SB	SB	SB
Directions Served	L	T	TR	L	T	TR	L	TR	L	T	R
Maximum Queue (ft)	234	250	1051	144	169	168	525	1098	224	473	100
Average Queue (ft)	134	209	430	94	106	109	522	1081	109	266	82
95th Queue (ft)	220	309	982	148	169	170	561	1090	216	476	137
Link Distance (ft)			1734		145	145		1064		467	
Upstream Blk Time (%)			1	1	3	4		71		4	
Queuing Penalty (veh)			0	0	10	11		0		0	
Storage Bay Dist (ft)	225	225		140			500		200		75
Storage Blk Time (%)	1	1	19	2	4		38	36	0	46	1
Queuing Penalty (veh)	9	8	72	3	6		186	133	1	156	4

Intersection: 6: Riverton Dr & Forest Ave

Movement	EB	WB	NB	NB
Directions Served	TR	L	L	R
Maximum Queue (ft)	4	34	108	35
Average Queue (ft)	0	8	45	13
95th Queue (ft)	3	30	85	39
Link Distance (ft)	200		151	151
Upstream Blk Time (%)			0	
Queuing Penalty (veh)			0	
Storage Bay Dist (ft)		100		
Storage Blk Time (%)				
Queuing Penalty (veh)				

Intersection: 9: Castine Ave/Riverside Industrial & Forest Ave

Movement	EB	EB	WB	NB	SB	SB
Directions Served	L	TR	LTR	LTR	LT	R
Maximum Queue (ft)	110	253	244	47	118	82
Average Queue (ft)	26	79	98	10	58	32
95th Queue (ft)	70	184	198	35	100	65
Link Distance (ft)		1136	486	288	374	
Upstream Blk Time (%)						
Queuing Penalty (veh)						
Storage Bay Dist (ft)	150					200
Storage Blk Time (%)		1				
Queuing Penalty (veh)		1				

Intersection: 12: Site & Forest Ave

Movement	EB	WB	NB
Directions Served	TR	L	LR
Maximum Queue (ft)	11	69	62
Average Queue (ft)	1	24	32
95th Queue (ft)	8	57	53
Link Distance (ft)	180		156
Upstream Blk Time (%)			
Queuing Penalty (veh)			
Storage Bay Dist (ft)		100	
Storage Blk Time (%)		0	
Queuing Penalty (veh)		1	

Intersection: 14: Riverton Dr & Site

Movement	WB
Directions Served	LR
Maximum Queue (ft)	70
Average Queue (ft)	29
95th Queue (ft)	53
Link Distance (ft)	98
Upstream Blk Time (%)	0
Queuing Penalty (veh)	0
Storage Bay Dist (ft)	
Storage Blk Time (%)	
Queuing Penalty (veh)	

Zone Summary

Zone wide Queuing Penalty: 601

3: Riverside St & Forest Ave Performance by movement

Movement	EBL	EBT	EBR	WBL	WBT	WBR	NBL	NBT	NBR	SBL	SBT	SBR
Denied Del/Veh (s)	660.5	666.0	667.7	1.8	0.9	0.8	3.5	1.0	1.0	3.6	0.6	3.6
Total Del/Veh (s)	157.8	142.4	139.1	55.6	21.2	13.7	66.0	48.5	37.2	67.0	50.0	12.4

3: Riverside St & Forest Ave Performance by movement

Movement	All
Denied Del/Veh (s)	381.9
Total Del/Veh (s)	92.0

6: Riverton Dr & Forest Ave Performance by movement

Movement	EBT	EBR	WBL	WBT	NBL	NBT	NBR	All
Denied Del/Veh (s)	0.0	0.0	0.0	0.0	0.3	0.0	0.0	0.0
Total Del/Veh (s)	2.2	1.1	9.4	0.4	21.9	0.4	10.7	3.2

9: Castine Ave/Riverside Industrial & Forest Ave Performance by movement

Movement	EBL	EBT	EBR	WBT	WBR	NBL	NBT	NBR	SBL	SBT	SBR	All
Denied Del/Veh (s)	0.0	0.0	0.0	0.7	0.7	0.1	0.1	0.2	0.3	0.5	3.8	0.4
Total Del/Veh (s)	16.9	6.6	4.1	13.0	8.9	47.0	37.0	14.4	37.6	57.0	9.8	11.4

12: Site & Forest Ave Performance by movement

Movement	EBT	EBR	WBL	WBT	NBR	All
Denied Del/Veh (s)	0.0	0.0	0.0	0.0	0.1	0.0
Total Del/Veh (s)	1.6	0.5	10.8	2.7	9.3	2.5

14: Riverton Dr & Site Performance by movement

Movement	WBR	NBT	SBT	All
Denied Del/Veh (s)	0.1	0.1	0.0	0.1
Total Del/Veh (s)	2.6	0.1	0.4	0.7

Total Zone Performance

Denied Del/Veh (s)	316.5
Total Del/Veh (s)	801.0

Intersection: 3: Riverside St & Forest Ave

Movement	EB	EB	EB	WB	WB	WB	NB	NB	SB	SB	SB
Directions Served	L	T	TR	L	T	TR	L	TR	L	T	R
Maximum Queue (ft)	236	250	1774	143	167	146	396	438	198	286	100
Average Queue (ft)	143	245	1652	102	82	77	163	215	38	149	50
95th Queue (ft)	227	275	2130	149	162	137	308	379	116	261	129
Link Distance (ft)			1734		144	144		584		467	
Upstream Blk Time (%)			43	3	4	0		0			
Queuing Penalty (veh)			0	0	9	1		0			
Storage Bay Dist (ft)	225	225		140			500		200		75
Storage Blk Time (%)	1	2	35	4	4		0	0		37	0
Queuing Penalty (veh)	8	25	218	5	8		1	0		42	0

Intersection: 6: Riverton Dr & Forest Ave

Movement	EB	WB	NB	NB
Directions Served	TR	L	L	R
Maximum Queue (ft)	20	67	124	107
Average Queue (ft)	2	15	43	43
95th Queue (ft)	12	47	93	81
Link Distance (ft)	200		151	151
Upstream Blk Time (%)			0	
Queuing Penalty (veh)			0	
Storage Bay Dist (ft)		100		
Storage Blk Time (%)				
Queuing Penalty (veh)				

Intersection: 9: Castine Ave/Riverside Industrial & Forest Ave

Movement	EB	EB	WB	NB	SB	SB
Directions Served	L	TR	LTR	LTR	LT	R
Maximum Queue (ft)	165	342	380	60	133	82
Average Queue (ft)	49	87	149	16	50	33
95th Queue (ft)	107	221	310	47	106	66
Link Distance (ft)		1136	486	288	374	
Upstream Blk Time (%)			0			
Queuing Penalty (veh)			0			
Storage Bay Dist (ft)	150					200
Storage Blk Time (%)	0	2			0	
Queuing Penalty (veh)	0	3			0	

Intersection: 12: Site & Forest Ave

Movement	EB	WB	NB
Directions Served	TR	L	LR
Maximum Queue (ft)	9	65	72
Average Queue (ft)	0	19	31
95th Queue (ft)	5	52	60
Link Distance (ft)	180		156
Upstream Blk Time (%)			
Queuing Penalty (veh)			
Storage Bay Dist (ft)		100	
Storage Blk Time (%)		0	
Queuing Penalty (veh)		1	

Intersection: 14: Riverton Dr & Site

Movement	WB
Directions Served	LR
Maximum Queue (ft)	66
Average Queue (ft)	23
95th Queue (ft)	51
Link Distance (ft)	98
Upstream Blk Time (%)	0
Queuing Penalty (veh)	0
Storage Bay Dist (ft)	
Storage Blk Time (%)	
Queuing Penalty (veh)	

Zone Summary

Zone wide Queuing Penalty: 321

3: Riverside St & Forest Ave Performance by movement

Movement	EBL	EBT	EBR	WBL	WBT	WBR	NBL	NBT	NBR	SBL	SBT	SBR
Denied Del/Veh (s)	3.0	0.9	0.9	0.3	0.1	0.1	1174.8	1176.0	1170.0	96.2	95.7	96.7
Total Del/Veh (s)	63.1	37.7	35.1	61.3	29.4	21.6	358.7	183.8	172.9	112.0	88.6	58.0

3: Riverside St & Forest Ave Performance by movement

Movement	All
Denied Del/Veh (s)	440.3
Total Del/Veh (s)	96.2

6: Riverton Dr & Forest Ave Performance by movement

Movement	EBT	EBR	WBL	WBT	NBL	NBT	NBR	All
Denied Del/Veh (s)	0.0	0.1	0.0	0.0	0.4	0.0	0.0	0.0
Total Del/Veh (s)	2.2	0.9	7.6	0.7	24.7	0.3	8.8	2.8

9: Castine Ave/Riverside Industrial & Forest Ave Performance by movement

Movement	EBL	EBT	EBR	WBL	WBT	WBR	NBL	NBR	SBL	SBT	SBR	All
Denied Del/Veh (s)	0.3	0.1	0.0	15.4	3.8	3.9	0.3	0.1	0.6	0.2	3.7	2.2
Total Del/Veh (s)	25.7	8.9	8.0	32.1	19.1	15.5	47.5	18.4	36.9	44.8	21.3	17.3

12: Site & Forest Ave Performance by movement

Movement	EBT	EBR	WBL	WBT	NBR	All
Denied Del/Veh (s)	0.0	0.0	0.0	0.0	0.1	0.0
Total Del/Veh (s)	1.6	0.6	9.4	3.6	7.5	3.2

14: Riverton Dr & Site Performance by movement

Movement	WBR	NBT	SBT	All
Denied Del/Veh (s)	0.1	0.1	0.0	0.1
Total Del/Veh (s)	2.6	0.1	0.3	1.1

Total Zone Performance

Denied Del/Veh (s)	366.2
Total Del/Veh (s)	987.5

Intersection: 3: Riverside St & Forest Ave

Movement	EB	EB	EB	WB	WB	WB	NB	NB	SB	SB	SB
Directions Served	L	T	TR	L	T	TR	L	TR	L	T	R
Maximum Queue (ft)	217	250	601	144	190	180	525	1089	225	524	100
Average Queue (ft)	110	178	267	103	147	146	524	1080	159	468	98
95th Queue (ft)	191	292	463	164	192	187	527	1087	281	595	115
Link Distance (ft)			1734		145	145		1064		467	
Upstream Blk Time (%)				1	16	16		81		55	
Queuing Penalty (veh)				0	64	64		0		0	
Storage Bay Dist (ft)	225	225		140			500		200		75
Storage Blk Time (%)	0	1	10	2	18		81	0	2	51	11
Queuing Penalty (veh)	1	2	31	5	25		494	1	11	261	39

Intersection: 6: Riverton Dr & Forest Ave

Movement	EB	WB	WB	NB	NB
Directions Served	TR	L	T	L	R
Maximum Queue (ft)	22	43	11	95	57
Average Queue (ft)	1	7	1	44	22
95th Queue (ft)	9	31	9	83	50
Link Distance (ft)	200		179	109	109
Upstream Blk Time (%)				0	
Queuing Penalty (veh)				0	
Storage Bay Dist (ft)		100			
Storage Blk Time (%)					
Queuing Penalty (veh)					

Intersection: 9: Castine Ave/Riverside Industrial & Forest Ave

Movement	EB	EB	WB	NB	SB	SB
Directions Served	L	TR	LTR	LTR	LT	R
Maximum Queue (ft)	141	339	510	48	173	191
Average Queue (ft)	43	120	252	7	85	74
95th Queue (ft)	98	264	492	30	140	140
Link Distance (ft)		1136	486	288	374	
Upstream Blk Time (%)			5			
Queuing Penalty (veh)			0			
Storage Bay Dist (ft)	150					200
Storage Blk Time (%)	0	4			0	0
Queuing Penalty (veh)	0	3			0	0

Intersection: 12: Site & Forest Ave

Movement	EB	WB	NB
Directions Served	TR	L	LR
Maximum Queue (ft)	17	58	59
Average Queue (ft)	1	21	32
95th Queue (ft)	8	52	54
Link Distance (ft)	179		156
Upstream Blk Time (%)			
Queuing Penalty (veh)			
Storage Bay Dist (ft)		100	
Storage Blk Time (%)			
Queuing Penalty (veh)			

Intersection: 14: Riverton Dr & Site

Movement	WB
Directions Served	LR
Maximum Queue (ft)	60
Average Queue (ft)	26
95th Queue (ft)	52
Link Distance (ft)	98
Upstream Blk Time (%)	
Queuing Penalty (veh)	
Storage Bay Dist (ft)	
Storage Blk Time (%)	
Queuing Penalty (veh)	

Zone Summary

Zone wide Queuing Penalty: 1002

6: Riverton Dr & Forest Ave Performance by movement

Movement	EBT	EBR	WBL	WBT	NBL	NBT	NBR	All
Denied Del/Veh (s)	0.0	0.2	0.0	0.0	1.1	0.0	0.2	0.1
Total Del/Veh (s)	2.5	1.3	11.7	0.6	28.1	0.3	12.8	4.0

12: Site & Forest Ave Performance by movement

Movement	EBT	EBR	WBT	NBR	All
Denied Del/Veh (s)	0.0	0.0	0.0	0.1	0.0
Total Del/Veh (s)	1.6	0.6	2.7	9.4	2.3

14: Riverton Dr & Site Performance by movement

Movement	WBR	NBT	SBL	SBT	All
Denied Del/Veh (s)	0.1	0.1	0.0	0.0	0.1
Total Del/Veh (s)	2.6	0.1	1.7	0.7	0.9

Total Zone Performance

Denied Del/Veh (s)	0.5
Total Del/Veh (s)	48.9

Intersection: 6: Riverton Dr & Forest Ave

Movement	EB	WB	WB	NB	NB
Directions Served	TR	L	T	L	R
Maximum Queue (ft)	40	109	69	119	115
Average Queue (ft)	3	31	2	45	43
95th Queue (ft)	21	81	37	92	84
Link Distance (ft)	200		185	151	151
Upstream Blk Time (%)			0	0	
Queuing Penalty (veh)			1	0	
Storage Bay Dist (ft)		100			
Storage Blk Time (%)		1	0		
Queuing Penalty (veh)		3	0		

Intersection: 12: Site & Forest Ave

Movement	WB	NB
Directions Served	T	R
Maximum Queue (ft)	34	66
Average Queue (ft)	1	32
95th Queue (ft)	25	59
Link Distance (ft)	1131	157
Upstream Blk Time (%)		
Queuing Penalty (veh)		
Storage Bay Dist (ft)		
Storage Blk Time (%)		
Queuing Penalty (veh)		

Intersection: 14: Riverton Dr & Site

Movement	WB	SB
Directions Served	LR	LT
Maximum Queue (ft)	66	36
Average Queue (ft)	23	3
95th Queue (ft)	50	19
Link Distance (ft)	98	151
Upstream Blk Time (%)	0	
Queuing Penalty (veh)	0	
Storage Bay Dist (ft)		
Storage Blk Time (%)		
Queuing Penalty (veh)		

Zone Summary

Zone wide Queuing Penalty: 4

6: Riverton Dr & Forest Ave Performance by movement

Movement	EBT	EBR	WBL	WBT	NBL	NBT	NBR	All
Denied Del/Veh (s)	0.1	0.2	0.0	0.0	2.0	0.0	0.2	0.1
Total Del/Veh (s)	2.2	1.1	8.7	0.9	35.0	0.2	7.4	3.8

12: Site & Forest Ave Performance by movement

Movement	EBT	EBR	WBT	NBR	All
Denied Del/Veh (s)	0.0	0.0	0.0	0.1	0.0
Total Del/Veh (s)	1.6	0.5	3.5	6.4	2.9

14: Riverton Dr & Site Performance by movement

Movement	WBR	NBT	SBL	SBT	All
Denied Del/Veh (s)	0.2	0.1	0.1	0.0	0.1
Total Del/Veh (s)	2.8	0.6	1.2	0.5	1.3

Total Zone Performance

Denied Del/Veh (s)	1.0
Total Del/Veh (s)	44.7

Intersection: 6: Riverton Dr & Forest Ave

Movement	EB	WB	WB	NB	NB
Directions Served	TR	L	T	L	R
Maximum Queue (ft)	35	102	99	115	63
Average Queue (ft)	2	30	3	51	22
95th Queue (ft)	16	72	30	96	50
Link Distance (ft)	200		185	109	109
Upstream Blk Time (%)				2	
Queuing Penalty (veh)				1	
Storage Bay Dist (ft)		100			
Storage Blk Time (%)		0	0		
Queuing Penalty (veh)		3	0		

Intersection: 12: Site & Forest Ave

Movement	NB
Directions Served	R
Maximum Queue (ft)	68
Average Queue (ft)	31
95th Queue (ft)	58
Link Distance (ft)	157
Upstream Blk Time (%)	
Queuing Penalty (veh)	
Storage Bay Dist (ft)	
Storage Blk Time (%)	
Queuing Penalty (veh)	

Intersection: 14: Riverton Dr & Site

Movement	WB	NB	SB
Directions Served	LR	T	LT
Maximum Queue (ft)	67	22	40
Average Queue (ft)	26	1	4
95th Queue (ft)	50	11	22
Link Distance (ft)	98	466	109
Upstream Blk Time (%)			
Queuing Penalty (veh)			
Storage Bay Dist (ft)			
Storage Blk Time (%)			
Queuing Penalty (veh)			

Zone Summary

Zone wide Queuing Penalty: 4

6: Riverton Dr & Forest Ave Performance by movement

Movement	EBT	EBR	WBL	WBT	NBL	NBT	NBR	All
Denied Del/Veh (s)	0.0	0.0	0.0	0.0	0.0	0.0	0.0	0.0
Total Del/Veh (s)	1.8	1.2	8.3	0.6	24.4	0.2	7.2	3.3

12: Site & Forest Ave Performance by movement

Movement	EBT	EBR	WBT	NBR	All
Denied Del/Veh (s)	0.0	0.0	0.0	0.1	0.0
Total Del/Veh (s)	1.6	0.6	2.6	6.4	2.2

14: Riverton Dr & Site Performance by movement

Movement	WBR	NBT	SBL	SBT	All
Denied Del/Veh (s)	0.1	0.1	0.0	0.0	0.1
Total Del/Veh (s)	2.5	0.1	1.6	0.5	1.3

Total Zone Performance

Denied Del/Veh (s)	0.3
Total Del/Veh (s)	49.3

Intersection: 6: Riverton Dr & Forest Ave

Movement	EB	WB	NB	NB
Directions Served	TR	L	L	R
Maximum Queue (ft)	24	85	104	35
Average Queue (ft)	1	29	50	14
95th Queue (ft)	10	68	89	40
Link Distance (ft)	200		151	151
Upstream Blk Time (%)				
Queuing Penalty (veh)				
Storage Bay Dist (ft)		100		
Storage Blk Time (%)		1		
Queuing Penalty (veh)		3		

Intersection: 12: Site & Forest Ave

Movement	EB	NB
Directions Served	TR	R
Maximum Queue (ft)	11	76
Average Queue (ft)	1	30
95th Queue (ft)	10	58
Link Distance (ft)	185	157
Upstream Blk Time (%)		
Queuing Penalty (veh)		
Storage Bay Dist (ft)		
Storage Blk Time (%)		
Queuing Penalty (veh)		

Intersection: 14: Riverton Dr & Site

Movement	WB	SB
Directions Served	LR	LT
Maximum Queue (ft)	56	31
Average Queue (ft)	28	3
95th Queue (ft)	49	18
Link Distance (ft)	98	151
Upstream Blk Time (%)		
Queuing Penalty (veh)		
Storage Bay Dist (ft)		
Storage Blk Time (%)		
Queuing Penalty (veh)		

Zone Summary

Zone wide Queuing Penalty: 3

6: Riverton Dr & Forest Ave Performance by movement

Movement	EBT	EBR	WBL	WBT	NBL	NBT	NBR	All
Denied Del/Veh (s)	0.0	0.0	0.0	0.0	0.0	0.0	0.1	0.0
Total Del/Veh (s)	2.3	1.0	11.1	0.4	20.3	0.2	11.3	2.9

12: Site & Forest Ave Performance by movement

Movement	EBT	EBR	WBL	WBT	NBL	NBR	All
Denied Del/Veh (s)	0.0	0.0	0.0	0.0	0.1	0.2	0.0
Total Del/Veh (s)	1.5	0.6	9.3	2.7	23.1	11.0	2.8

14: Riverton Dr & Site Performance by movement

Movement	WBR	NBT	SBT	All
Denied Del/Veh (s)	0.1	0.1	0.0	0.1
Total Del/Veh (s)	2.4	0.1	0.4	0.5

Total Zone Performance

Denied Del/Veh (s)	0.2
Total Del/Veh (s)	49.4

Intersection: 6: Riverton Dr & Forest Ave

Movement	EB	WB	NB	NB
Directions Served	TR	L	L	R
Maximum Queue (ft)	35	72	92	98
Average Queue (ft)	1	18	32	44
95th Queue (ft)	16	55	75	83
Link Distance (ft)	200		151	151
Upstream Blk Time (%)				0
Queuing Penalty (veh)				0
Storage Bay Dist (ft)		100		
Storage Blk Time (%)		0		
Queuing Penalty (veh)		0		

Intersection: 12: Site & Forest Ave

Movement	WB	NB
Directions Served	L	LR
Maximum Queue (ft)	47	83
Average Queue (ft)	14	38
95th Queue (ft)	40	71
Link Distance (ft)		156
Upstream Blk Time (%)		
Queuing Penalty (veh)		
Storage Bay Dist (ft)	100	
Storage Blk Time (%)		
Queuing Penalty (veh)		

Intersection: 14: Riverton Dr & Site

Movement	WB
Directions Served	LR
Maximum Queue (ft)	28
Average Queue (ft)	14
95th Queue (ft)	36
Link Distance (ft)	98
Upstream Blk Time (%)	
Queuing Penalty (veh)	
Storage Bay Dist (ft)	
Storage Blk Time (%)	
Queuing Penalty (veh)	

Zone Summary

Zone wide Queuing Penalty: 0

6: Riverton Dr & Forest Ave Performance by movement

Movement	EBT	EBR	WBL	WBT	NBL	NBT	NBR	All
Denied Del/Veh (s)	0.0	0.0	0.0	0.0	0.1	0.0	0.0	0.0
Total Del/Veh (s)	2.2	1.0	9.2	0.7	26.3	0.2	8.0	2.5

12: Site & Forest Ave Performance by movement

Movement	EBT	EBR	WBL	WBT	NBL	NBR	All
Denied Del/Veh (s)	0.0	0.0	0.0	0.0	0.1	0.2	0.0
Total Del/Veh (s)	1.5	0.7	9.8	3.7	24.2	9.9	3.7

14: Riverton Dr & Site Performance by movement

Movement	WBR	NBT	SBT	All
Denied Del/Veh (s)	0.1	0.1	0.0	0.1
Total Del/Veh (s)	2.5	0.1	0.3	0.7

Total Zone Performance

Denied Del/Veh (s)	0.3
Total Del/Veh (s)	46.5

Intersection: 6: Riverton Dr & Forest Ave

Movement	EB	WB	WB	NB	NB
Directions Served	TR	L	T	L	R
Maximum Queue (ft)	26	48	27	81	64
Average Queue (ft)	1	8	1	38	27
95th Queue (ft)	9	32	16	72	54
Link Distance (ft)	200		179	109	109
Upstream Blk Time (%)				0	
Queuing Penalty (veh)				0	
Storage Bay Dist (ft)		100			
Storage Blk Time (%)			0		
Queuing Penalty (veh)			0		

Intersection: 12: Site & Forest Ave

Movement	EB	WB	NB
Directions Served	TR	L	LR
Maximum Queue (ft)	4	69	106
Average Queue (ft)	0	25	44
95th Queue (ft)	3	58	82
Link Distance (ft)	179		156
Upstream Blk Time (%)			0
Queuing Penalty (veh)			0
Storage Bay Dist (ft)		100	
Storage Blk Time (%)			
Queuing Penalty (veh)			

Intersection: 14: Riverton Dr & Site

Movement	WB
Directions Served	LR
Maximum Queue (ft)	56
Average Queue (ft)	20
95th Queue (ft)	47
Link Distance (ft)	98
Upstream Blk Time (%)	
Queuing Penalty (veh)	
Storage Bay Dist (ft)	
Storage Blk Time (%)	
Queuing Penalty (veh)	

Zone Summary

Zone wide Queuing Penalty: 0

6: Riverton Dr & Forest Ave Performance by movement

Movement	EBT	EBR	WBL	WBT	NBL	NBT	NBR	All
Denied Del/Veh (s)	0.0	0.0	0.0	0.0	0.0	0.0	0.0	0.0
Total Del/Veh (s)	1.7	0.8	6.3	0.4	17.2	0.2	8.8	1.9

12: Site & Forest Ave Performance by movement

Movement	EBT	EBR	WBL	WBT	NBL	NBR	All
Denied Del/Veh (s)	0.0	0.0	0.0	0.0	0.1	0.2	0.0
Total Del/Veh (s)	1.5	0.5	8.6	2.6	16.7	7.4	2.9

14: Riverton Dr & Site Performance by movement

Movement	WBR	NBT	SBT	All
Denied Del/Veh (s)	0.1	0.1	0.0	0.1
Total Del/Veh (s)	2.3	0.1	0.3	0.8

Total Zone Performance

Denied Del/Veh (s)	0.3
Total Del/Veh (s)	46.1

Intersection: 6: Riverton Dr & Forest Ave

Movement	WB	NB	NB
Directions Served	L	L	R
Maximum Queue (ft)	39	73	35
Average Queue (ft)	8	32	12
95th Queue (ft)	30	59	37
Link Distance (ft)		151	151
Upstream Blk Time (%)			
Queuing Penalty (veh)			
Storage Bay Dist (ft)	100		
Storage Blk Time (%)			
Queuing Penalty (veh)			

Intersection: 12: Site & Forest Ave

Movement	EB	WB	NB
Directions Served	TR	L	LR
Maximum Queue (ft)	14	61	88
Average Queue (ft)	1	21	39
95th Queue (ft)	8	52	75
Link Distance (ft)	180		156
Upstream Blk Time (%)			
Queuing Penalty (veh)			
Storage Bay Dist (ft)		100	
Storage Blk Time (%)			
Queuing Penalty (veh)			

Intersection: 14: Riverton Dr & Site

Movement	WB
Directions Served	LR
Maximum Queue (ft)	48
Average Queue (ft)	19
95th Queue (ft)	44
Link Distance (ft)	98
Upstream Blk Time (%)	
Queuing Penalty (veh)	
Storage Bay Dist (ft)	
Storage Blk Time (%)	
Queuing Penalty (veh)	

Zone Summary

Zone wide Queuing Penalty: 0

3: Riverside St & Forest Ave Performance by movement

Movement	EBL	EBT	EBR	WBL	WBT	WBR	NBL	NBT	NBR	SBL	SBT	SBR
Denied Del/Veh (s)	2.2	0.4	0.2	0.0	0.0	0.0	15.5	14.2	13.1	620.6	640.3	615.1
Total Del/Veh (s)	93.2	67.5	4.9	100.0	45.0	37.9	62.1	55.4	49.4	184.6	170.2	134.8

3: Riverside St & Forest Ave Performance by movement

Movement	All
Denied Del/Veh (s)	140.0
Total Del/Veh (s)	71.6

3: Riverside St & Forest Ave Performance by movement

Movement	EBL	EBT	EBR	WBL	WBT	WBR	NBL	NBT	NBR	SBL	SBT	SBR
Denied Del/Veh (s)	542.9	535.0	544.7	0.0	0.0	0.0	3.3	0.8	0.8	3.8	0.6	3.6
Total Del/Veh (s)	129.5	124.5	102.6	47.7	21.5	13.3	52.5	36.1	26.8	48.8	43.2	9.8

3: Riverside St & Forest Ave Performance by movement

Movement	All
Denied Del/Veh (s)	312.2
Total Del/Veh (s)	77.1

Intersection: 3: Riverside St & Forest Ave

Movement	EB	EB	EB	WB	WB	WB	NB	NB	SB	SB	SB
Directions Served	L	T	R	L	T	TR	L	TR	L	T	R
Maximum Queue (ft)	237	250	1768	164	252	167	279	333	106	291	100
Average Queue (ft)	196	246	1519	111	75	75	131	159	27	137	45
95th Queue (ft)	290	264	2277	174	177	146	236	274	75	241	124
Link Distance (ft)			1734		380	380		921		701	
Upstream Blk Time (%)			28								
Queuing Penalty (veh)			0								
Storage Bay Dist (ft)	225	225		140			500		200		75
Storage Blk Time (%)	1	27	2	11	0				0	33	0
Queuing Penalty (veh)	9	198	20	14	0				0	38	0

Appendix D
Left Turn Lane Warrant Analaysis

Figure 2 - 5. Guideline for determining the need for a major-road left-turn bay at a two-way stop-controlled intersection.

2-lane roadway (English)

INPUT

Variable	Value
85th percentile speed, mph:	35
Percent of left-turns in advancing volume (V_A), %:	8%
Advancing volume (V_A), veh/h:	828
Opposing volume (V_O), veh/h:	702

OUTPUT

Variable	Value
Limiting advancing volume (V_A), veh/h:	313
Guidance for determining the need for a major-road left-turn bay:	
Left-turn treatment warranted.	

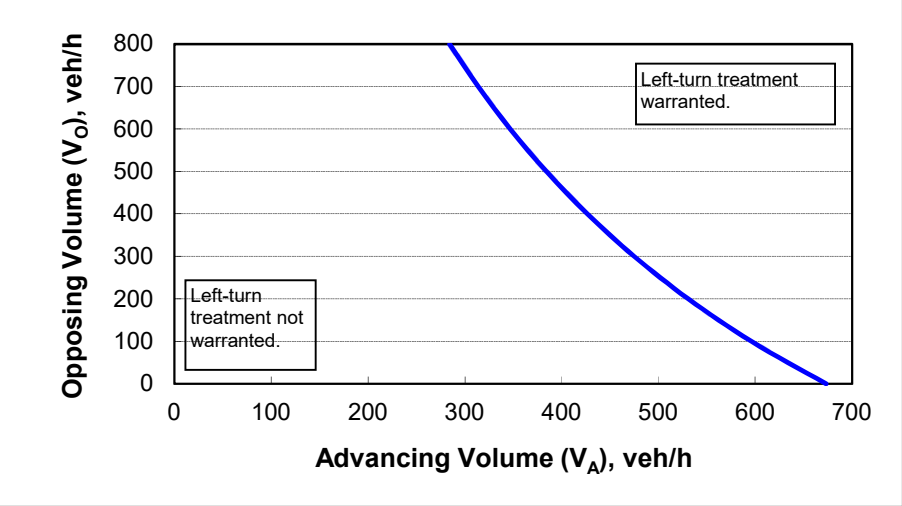

CALIBRATION CONSTANTS

Variable	Value
Average time for making left-turn, s:	3.0
Critical headway, s:	5.0
Average time for left-turn vehicle to clear the advancing lane, s:	1.9

Appendix E
Crash Data

Prepared by Office of Safety

RFK3 2-21-19

Portland

Link: 16892-18508

Element: 3106439

Study Period 2015-2017

of Crashes: 13 / CRF: 2.21

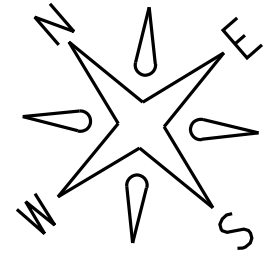

16892

7 Eleven Store

7 Eleven Store

Tortilla Flats

18508

19039 6-5-16 9:20P W/R Fail to Yield

3212 1-29-15 7:58A W/C Follow too Close

36125 12-10-16 5:55P
D/C Fail to Yield

23534 8-19-16 5:03P
D/C Fail to Yield

16745 5-28-15 5:46P W/CL Inattention

36775 7-29-15 5:01P
D/C Fail to Yield

12416 4-16-15 5:05P
D/C Fail to Yield

33597 11-21-16 5:10P D/C Fail to Yield

36875 12-15-16 8:47A D/C Fail to Yield

143615-10-17 7:31A D/C Follow too close

33002 11-3-17 3:42P D/CL Follow too close

C

46097 10-21-15 5:20P D/C Follow too Close

P

488 1-5-17 11:07A D/C Fail to yield

Rte. 302 / Forest Ave.

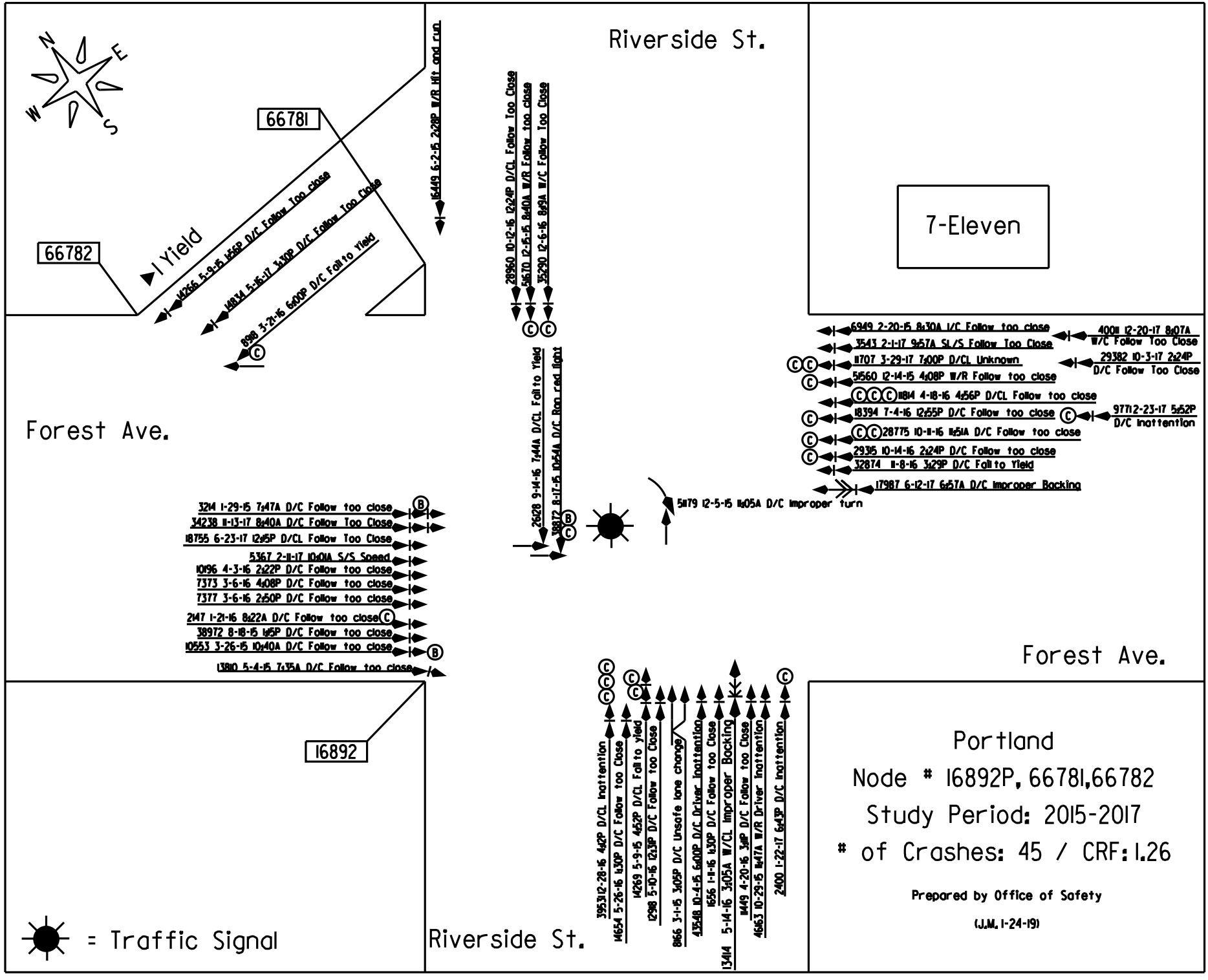
Riverside St.
66781
66782
Yield
16449 6-2-15 2:28P W/R Hit and run
14266 5-9-15 1:56P D/C Follow Too close
14834 5-16-17 3:10P D/C Follow Too Close
8198 3-21-16 6:00P D/C Fail to Yield
28960 10-12-16 12:24P D/CL Follow Too Close
36170 12-15-15 8:40A W/R Follow too close
35290 12-6-16 8:19A W/C Follow Too Close
7-Eleven
6949 2-20-15 8:30A I/C Follow too close
3543 2-1-17 9:57A SL/S Follow Too Close
11707 3-29-17 7:00P D/CL Unknown
5560 12-14-15 4:08P W/R Follow too close
11814 4-18-16 4:56P D/CL Follow too close
18394 7-4-16 12:55P D/C Follow too close
28775 10-11-16 11:51A D/C Follow too close
29315 10-14-16 2:24P D/C Follow too close
32874 11-8-16 3:29P D/C Fail to Yield
17987 6-12-17 6:57A D/C Improper Backing
40011 12-20-17 8:07A W/C Follow Too Close
29382 10-3-17 2:24P D/C Follow Too Close
97712-23-17 5:52P D/C Inattention
Forest Ave.
26128 9-14-16 7:44A D/CL Fail to Yield
38872 8-17-15 10:54A D/C Ran red light
5879 12-5-15 11:05A D/C Improper turn
3214 1-29-15 7:47A D/C Follow too close
34238 11-13-17 8:40A D/C Follow Too Close
18755 6-23-17 12:15P D/CL Follow Too Close
5367 2-11-17 10:01A S/S Speed
10196 4-3-16 2:22P D/C Follow too close
7373 3-6-16 4:08P D/C Follow too close
7377 3-6-16 2:50P D/C Follow too close
2147 1-21-16 8:22A D/C Follow too close
38972 8-18-15 1:15P D/C Follow too close
10553 3-26-15 10:40A D/C Follow too close
13810 5-4-15 7:35A D/C Follow too close
Forest Ave.
16892
39531 2-28-16 4:42P D/CL Inattention
14654 5-26-16 1:30P D/C Follow too Close
14269 5-9-15 4:52P D/CL Fail to yield
1298 5-10-16 12:38P D/C Follow too Close
8866 3-1-15 3:05P D/C Unsafe lane change
43548 10-4-15 6:00P D/C Driver Inattention
1656 1-11-16 1:30P D/C Follow too Close
13414 5-14-16 3:05A W/CL Improper Backing
8449 4-20-16 3:4P D/C Follow too Close
46631 10-29-15 11:47A W/R Driver Inattention
2400 1-22-17 6:43P D/C Inattention
= Traffic Signal
Riverside St.
Portland
Node # 16892P, 66781, 66782
Study Period: 2015-2017
# of Crashes: 45 / CRF: 1.26
Prepared by Office of Safety
(J.M. 1-24-19)

Maine Department Of Transportation - Traffic Engineering, Crash Records Section

Crash Summary Report

Report Selections and Input Parameters

REPORT SELECTIONS

☑ **Crash Summary I** ☐ **Section Detail** ☑ **Crash Summary II** ☐ **1320 Public** ☐ **1320 Private** ☐ **1320 Summary**

REPORT DESCRIPTION

Portland - Rte 302 from Riverside St to Riverside Industrial Pkwy

REPORT PARAMETERS

Year 2015, Start Month 1 through Year 2017 End Month: 12

Route: **0302X**	Start Node: **13321**	Start Offset: **0**	☐ **Exclude First Node**
	End Node: **16892**	End Offset: **0**	☐ **Exclude Last Node**
Route: **0561174**	Start Node: **18508**	Start Offset: **0**	☑ **Exclude First Node**
	End Node: **18509**	End Offset: **0**	☑ **Exclude Last Node**

Crash Summary I

Nodes

Node	Route - MP	Node Description	U/R	Total Crashes	Injury Crashes K	A	B	C	PD	Percent Injury	Annual M Ent-Veh	Crash Rate	Critical Rate	CRF
P16892	0302X - 3.97	Int of FOREST AV RIVERSIDE ST	9	45	0	0	3	14	28	37.8	10.662	1.41	1.12	1.26
												Statewide Crash Rate:	0.74	
P13321	0302X - 3.61	Int of FOREST AV RIVERSIDE INDUSTRIAL PKWY	9	8	0	0	1	3	4	50.0	5.770	0.46	1.24	0.00
												Statewide Crash Rate:	0.74	
18508	0302X - 3.89	Int of FOREST AV RIVERTON DR	2	1	0	0	1	0	0	100.0	5.326	0.06	0.35	0.00
												Statewide Crash Rate:	0.14	
Study Years:	3.00	**NODE TOTALS:**		54	0	0	5	17	32	40.7	21.758	0.83	0.83	1.00

Crash Summary I

Sections

Start Node	End Node	Element	Offset Begin - End	Route - MP	Section Length	U/R	Total Crashes	Injury Crashes K	A	B	C	PD	Percent Injury	Annual HMVM	Crash Rate	Critical Rate	CRF
13321	18508	3123934	0 - 0.28	0302X - 3.61	0.28	2	14	0	0	0	6	7	46.2	0.01540	302.96	363.00	0.00
Int of FOREST AV	RIVERSIDE INDUSTRIAL PKWY			US 302											Statewide Crash Rate: 203.06		
16892	18508	3106439	0 - 0.08	0302X - 3.89	0.08	2	13	0	0	0	1	12	7.7	0.00395	1097.32	498.11	2.20
Int of FOREST AV	RIVERSIDE ST			US 302											Statewide Crash Rate: 203.06		
18508	18509	194012	0 - 0.18	0561174 - 0	0.18	2	2	0	0	0	1	0	100.0	0.00039	1731.59	1505.61	1.15
Int of FOREST AV	RIVERTON DR			RD INV 05 61174											Statewide Crash Rate: 407.82		
Study Years:	3.00			**Section Totals:**	0.54		29	0	0	0	8	19	27.6	0.01974	489.76	350.94	1.40
				Grand Totals:	0.54		83	0	0	5	25	51	36.1	0.01974	1401.72	484.07	2.90

Crash Summary

Section Details

Start Node	End Node	Element	Offset Begin - End	Route - MP	Total Crashes	Injury Crashes K	A	B	C	PD	Crash Report	Crash Date	Crash Mile Point	Injury Degree
13321	18508	3123934	0 - 0.28	0302X - 3.61	14	0	0	0	6	7	2016-32605	11/03/2016	3.62	
											2015-41237	09/10/2015	3.63	PD
											2017-31717	10/24/2017	3.71	PD
											2017-20693	07/07/2017	3.72	C
											2017-39138	12/18/2017	3.72	PD
											2017-11584	04/05/2017	3.76	C
											2016-14149	05/23/2016	3.76	PD
											2017-21436	07/20/2017	3.77	C
											2016-25208	09/05/2016	3.77	PD
											2016-26419	09/15/2016	3.78	C
											2016-10202	04/05/2016	3.80	PD
											2017-15063	05/18/2017	3.82	PD
											2015-7408	02/24/2015	3.85	C
											2017-23515	08/08/2017	3.88	C
16892	18508	3106439	0 - 0.08	0302X - 3.89	13	0	0	0	1	12	2015-12416	04/16/2015	3.90	PD
											2015-3212	01/29/2015	3.90	PD
											2015-46097	10/21/2015	3.91	PD
											2016-33597	11/21/2016	3.93	PD
											2017-33002	11/03/2017	3.94	C
											2015-16745	05/28/2015	3.94	PD
											2015-36775	07/29/2015	3.94	PD
											2016-23534	08/19/2016	3.94	PD
											2016-36125	12/10/2016	3.94	PD
											2016-19039	06/05/2016	3.94	PD
											2016-36875	12/15/2016	3.94	PD
											2017-14361	05/10/2017	3.94	PD
											2017-488	01/05/2017	3.95	PD
18508	18509	194012	0 - 0.18	0561174 - 0	2	0	0	0	1	0	2016-31035	10/24/2016	0.03	
											2016-8912	03/15/2016	0.10	C
				Totals:	29	0	0	0	8	19				

Crash Summary II - Characteristics

Crashes by Day and Hour

	AM												PM												
	Hour of Day																								
Day Of Week	**12**	**1**	**2**	**3**	**4**	**5**	**6**	**7**	**8**	**9**	**10**	**11**	**12**	**1**	**2**	**3**	**4**	**5**	**6**	**7**	**8**	**9**	**10**	**11**	**Un**	**Tot**
SUNDAY	0	0	0	0	0	0	0	0	0	0	0	0	0	0	2	1	1	0	2	0	0	1	0	0	0	7
MONDAY	0	0	0	0	0	0	1	1	2	0	1	0	1	1	0	0	2	2	1	1	1	0	0	0	0	14
TUESDAY	0	0	0	0	0	0	0	1	2	0	0	1	1	2	3	3	1	1	0	0	0	0	0	0	0	15
WEDNESDAY	0	0	0	0	0	0	1	2	2	1	0	0	1	0	1	1	2	2	0	1	0	0	0	0	0	14
THURSDAY	0	0	0	0	0	0	1	3	2	0	1	3	0	1	0	1	1	4	0	0	0	0	0	0	0	17
FRIDAY	0	0	0	0	0	0	0	0	1	0	0	0	1	1	1	1	1	2	0	0	0	0	0	0	0	8
SATURDAY	0	0	0	1	0	0	0	0	1	0	1	1	0	1	0	1	1	1	0	0	0	0	0	0	0	8
Totals	0	0	0	1	0	0	3	7	10	1	3	5	4	6	7	8	9	12	3	2	1	1	0	0	0	**83**

Vehicle Counts by Type

Unit Type	Total
1-Passenger Car	88
2-(Sport) Utility Vehicle	45
3-Passenger Van	11
4-Cargo Van (10K lbs or Less)	2
5-Pickup	20
6-Motor Home	0
7-School Bus	0
8-Transit Bus	2
9-Motor Coach	0
10-Other Bus	0
11-Motorcycle	1
12-Moped	0
13-Low Speed Vehicle	0
14-Autocycle	0
15-Experimental	0
16-Other Light Trucks (10,000 lbs or Less)	0
17-Medium/Heavy Trucks (More than 10,000 lbs)	3
18-ATV - (4 wheel)	0
20-ATV - (2 wheel)	0
21-Snowmobile	0
22-Pedestrian	1
23-Bicyclist	1
24-Witness	8
25-Other	2
26-Construction	0
27-Farm Vehicle	0
Total	**184**

Crash Summary II - Characteristics

Crashes by Driver Action at Time of Crash

Driver Action at Time of Crash	Dr 1	Dr 2	Dr 3	Dr 4	Dr 5	Other	Total
No Contributing Action	17	59	8	1	1	0	86
Ran Off Roadway	0	0	0	0	0	0	0
Failed to Yield Right-of-Way	12	2	0	0	0	0	14
Ran Red Light	0	1	0	0	0	0	1
Ran Stop Sign	0	0	0	0	0	0	0
Disregarded Other Traffic Sign	0	0	0	0	0	0	0
Disregarded Other Road Markings	0	0	0	0	0	0	0
Exceeded Posted Speed Limit	0	0	0	0	0	0	0
Drove Too Fast For Conditions	1	1	0	0	0	0	2
Improper Turn	2	0	0	0	0	0	2
Improper Backing	3	0	0	0	0	0	3
Improper Passing	1	0	0	0	0	0	1
Wrong Way	0	0	0	0	0	0	0
Followed Too Closely	38	9	2	0	0	0	49
Failed to Keep in Proper Lane	2	3	0	0	0	0	5
Operated Motor Vehicle in Erratic, Reckless, Careless, Negligent or Aggressive Manner	1	0	0	0	0	0	1
Swerved or Avoided Due to Wind, Slippery Surface, Motor Vehicle, Object, Non-Motorist in Roadway	0	0	0	0	0	0	0
Over-Correcting/Over-Steering	0	0	0	0	0	0	0
Other Contributing Action	4	3	0	0	0	0	7
Unknown	0	0	0	0	0	0	0
Total	**81**	**78**	**10**	**1**	**1**	**0**	**171**

Crashes by Apparent Physical Condition And Driver

Apparent Physical Condition	Dr 1	Dr 2	Dr 3	Dr 4	Dr 5	Other	Total
Apparently Normal	77	77	10	1	1	1	167
Physically Impaired or Handicapped	1	0	0	0	0	0	1
Emotional(Depressed, Angry, Disturbed, etc.)	2	0	0	0	0	0	2
Ill (Sick)	1	0	0	0	0	0	1
Asleep or Fatigued	0	1	0	0	0	0	1
Under the Influence of Medications/Drugs/Alcohol	0	0	0	0	0	0	0
Other	0	0	0	0	0	1	1
Total	**81**	**78**	**10**	**1**	**1**	**2**	**173**

Driver Age by Unit Type

Age	Driver	Bicycle	SnowMobile	Pedestrian	ATV	Total
09-Under	0	0	0	0	0	0
10-14	0	0	0	0	0	0
15-19	13	0	0	0	0	13
20-24	21	0	0	0	0	21
25-29	25	0	0	0	0	25
30-39	35	0	0	0	0	35
40-49	29	0	0	0	0	29
50-59	25	0	0	0	0	25
60-69	18	0	0	0	0	18
70-79	4	0	0	0	0	4
80-Over	2	0	0	0	0	2
Unknown	2	1	0	1	0	4
Total	**174**	**1**	**0**	**1**	**0**	**176**

Crash Summary II - Characteristics

Most Harmful Event

Most Harmful Event	Total	Most Harmful Event	Total
1-Overturn / Rollover	0	38-Other Fixed Object (wall, building, tunnel, etc.)	0
2-Fire / Explosion	0	39-Unknown	3
3-Immersion	0	40-Gate or Cable	0
4-Jackknife	0	41-Pressure Ridge	1
5-Cargo / Equipment Loss Or Shift	0	**Total**	**174**
6-Fell / Jumped from Motor Vehicle	0		
7-Thrown or Falling Object	0		
8-Other Non-Collision	0		
9-Pedestrian	0		
10-Pedalcycle	0		
11-Railway Vehicle - Train, Engine	0		
12-Animal	0		
13-Motor Vehicle in Transport	167		
14-Parked Motor Vehicle	2		
15-Struck by Falling, Shifting Cargo or Anything Set in Motion by Motor Vehicle	1		
16-Work Zone / Maintenance Equipment	0		
17-Other Non-Fixed Object	0		
18-Impact Attenuator / Crash Cushion	0		
19-Bridge Overhead Structure	0		
20-Bridge Pier or Support	0		
21-Bridge Rail	0		
22-Cable Barrier	0		
23-Culvert	0		
24-Curb	0		
25-Ditch	0		
26-Embankment	0		
27-Guardrail Face	0		
28-Guardrail End	0		
29-Concrete Traffic Barrier	0		
30-Other Traffic Barrier	0		
31-Tree (Standing)	0		
32-Utility Pole / Light Support	0		
33-Traffic Sign Support	0		
34-Traffic Signal Support	0		
35-Fence	0		
36-Mailbox	0		
37-Other Post Pole or Support	0		

Injury Data

Severity Code	Injury Crashes	Number Of Injuries
K	0	0
A	0	0
B	5	5
C	25	39
PD	51	0
Total	**81**	**44**

Road Character

Road Grade	Total
1-Level	79
2-On Grade	4
3-Top of Hill	0
4-Bottom of Hill	0
5-Other	0
Total	**83**

Traffic Control Devices

Traffic Control Device	Total
1-Traffic Signals (Stop & Go)	57
2-Traffic Signals (Flashing)	0
3-Advisory/Warning Sign	0
4-Stop Signs - All Approaches	0
5-Stop Signs - Other	1
6-Yield Sign	2
7-Curve Warning Sign	0
8-Officer, Flagman, School Patrol	0
9-School Bus Stop Arm	0
10-School Zone Sign	0
11-R.R. Crossing Device	0
12-No Passing Zone	4
13-None	18
14-Other	1
Total	**83**

Light

Light Condition	Total
1-Daylight	67
2-Dawn	1
3-Dusk	5
4-Dark - Lighted	10
5-Dark - Not Lighted	0
6-Dark - Unknown Lighting	0
7-Unknown	0
Total	**83**

Crash Summary II - Characteristics

Crashes by Year and Month

Month	2015	2016	2017	Total
JANUARY	2	4	2	8
FEBRUARY	2	0	3	5
MARCH	2	4	1	7
APRIL	1	4	1	6
MAY	4	4	5	13
JUNE	2	1	2	5
JULY	1	1	2	4
AUGUST	3	1	1	5
SEPTEMBER	1	3	0	4
OCTOBER	3	4	2	9
NOVEMBER	1	3	3	7
DECEMBER	3	4	3	10
Total	**25**	**33**	**25**	**83**

Report is limited to the last 10 years of data.

Crash Summary II - Characteristics

Crashes by Crash Type and Type of Location

Crash Type	Straight Road	Curved Road	Three Leg Intersection	Four Leg Intersection	Five or More Leg Intersection	Driveways	Bridges	Interchanges	Other	Parking Lot	Private Way	Cross Over	Railroad Crossing	Traffic Circle-Roundabout	Total
Object in Road	0	0	0	0	0	0	0	0	0	0	0	0	0	0	0
Rear End - Sideswipe	13	1	10	39	0	4	0	0	0	0	0	0	0	0	67
Head-on - Sideswipe	0	0	0	0	0	0	0	0	0	0	0	0	0	0	0
Intersection Movement	0	0	1	3	0	8	0	0	0	0	0	0	0	0	12
Pedestrians	0	0	0	0	0	1	0	0	0	0	0	0	0	0	1
Train	0	0	0	0	0	0	0	0	0	0	0	0	0	0	0
Went Off Road	2	0	0	0	0	0	0	0	0	0	0	0	0	0	2
All Other Animal	0	0	0	0	0	0	0	0	0	0	0	0	0	0	0
Bicycle	0	0	1	0	0	0	0	0	0	0	0	0	0	0	1
Other	0	0	0	0	0	0	0	0	0	0	0	0	0	0	0
Jackknife	0	0	0	0	0	0	0	0	0	0	0	0	0	0	0
Rollover	0	0	0	0	0	0	0	0	0	0	0	0	0	0	0
Fire	0	0	0	0	0	0	0	0	0	0	0	0	0	0	0
Submersion	0	0	0	0	0	0	0	0	0	0	0	0	0	0	0
Thrown or Falling Object	0	0	0	0	0	0	0	0	0	0	0	0	0	0	0
Bear	0	0	0	0	0	0	0	0	0	0	0	0	0	0	0
Deer	0	0	0	0	0	0	0	0	0	0	0	0	0	0	0
Moose	0	0	0	0	0	0	0	0	0	0	0	0	0	0	0
Turkey	0	0	0	0	0	0	0	0	0	0	0	0	0	0	0
Total	**15**	**1**	**12**	**42**	**0**	**13**	**0**	**0**	**0**	**0**	**0**	**0**	**0**	**0**	**83**

Crash Summary II - Characteristics

Crashes by Weather, Light Condition and Road Surface

Weather Light	Dry	Ice/Frost	Mud, Dirt, Gravel	Oil	Other	Sand	Slush	Snow	Unknown	Water (Standing, Moving)	Wet	Total
Blowing Sand, Soil, Dirt												
Dark - Lighted	0	0	0	0	0	0	0	0	0	0	0	0
Dark - Not Lighted	0	0	0	0	0	0	0	0	0	0	0	0
Dark - Unknown Lighting	0	0	0	0	0	0	0	0	0	0	0	0
Dawn	0	0	0	0	0	0	0	0	0	0	0	0
Daylight	0	0	0	0	0	0	0	0	0	0	0	0
Dusk	0	0	0	0	0	0	0	0	0	0	0	0
Unknown	0	0	0	0	0	0	0	0	0	0	0	0
Blowing Snow												
Dark - Lighted	0	0	0	0	0	0	0	0	0	0	0	0
Dark - Not Lighted	0	0	0	0	0	0	0	0	0	0	0	0
Dark - Unknown Lighting	0	0	0	0	0	0	0	0	0	0	0	0
Dawn	0	0	0	0	0	0	0	0	0	0	0	0
Daylight	0	0	0	0	0	0	0	0	0	0	0	0
Dusk	0	0	0	0	0	0	0	0	0	0	0	0
Unknown	0	0	0	0	0	0	0	0	0	0	0	0
Clear												
Dark - Lighted	5	0	0	0	0	0	0	0	0	0	0	5
Dark - Not Lighted	0	0	0	0	0	0	0	0	0	0	0	0
Dark - Unknown Lighting	0	0	0	0	0	0	0	0	0	0	0	0
Dawn	0	0	0	0	0	0	0	0	0	0	0	0
Daylight	39	1	0	0	0	0	0	0	0	0	4	44
Dusk	2	0	0	0	0	0	0	0	0	0	0	2
Unknown	0	0	0	0	0	0	0	0	0	0	0	0
Cloudy												
Dark - Lighted	1	0	0	0	0	0	0	0	0	0	1	2
Dark - Not Lighted	0	0	0	0	0	0	0	0	0	0	0	0
Dark - Unknown Lighting	0	0	0	0	0	0	0	0	0	0	0	0
Dawn	1	0	0	0	0	0	0	0	0	0	0	1
Daylight	12	0	0	0	0	0	0	0	0	0	2	14
Dusk	3	0	0	0	0	0	0	0	0	0	0	3
Unknown	0	0	0	0	0	0	0	0	0	0	0	0

Crash Summary II - Characteristics

Crashes by Weather, Light Condition and Road Surface

Weather Light	Dry	Ice/Frost	Mud, Dirt, Gravel	Oil	Other	Sand	Slush	Snow	Unknown	Water (Standing, Moving)	Wet	Total
Fog, Smog, Smoke												
Dark - Lighted	0	0	0	0	0	0	0	0	0	0	0	0
Dark - Not Lighted	0	0	0	0	0	0	0	0	0	0	0	0
Dark - Unknown Lighting	0	0	0	0	0	0	0	0	0	0	0	0
Dawn	0	0	0	0	0	0	0	0	0	0	0	0
Daylight	0	0	0	0	0	0	0	0	0	0	0	0
Dusk	0	0	0	0	0	0	0	0	0	0	0	0
Unknown	0	0	0	0	0	0	0	0	0	0	0	0
Other												
Dark - Lighted	0	0	0	0	0	0	0	0	0	0	0	0
Dark - Not Lighted	0	0	0	0	0	0	0	0	0	0	0	0
Dark - Unknown Lighting	0	0	0	0	0	0	0	0	0	0	0	0
Dawn	0	0	0	0	0	0	0	0	0	0	0	0
Daylight	0	0	0	0	0	0	0	0	0	0	0	0
Dusk	0	0	0	0	0	0	0	0	0	0	0	0
Unknown	0	0	0	0	0	0	0	0	0	0	0	0
Rain												
Dark - Lighted	0	0	0	0	0	0	0	0	0	0	2	2
Dark - Not Lighted	0	0	0	0	0	0	0	0	0	0	0	0
Dark - Unknown Lighting	0	0	0	0	0	0	0	0	0	0	0	0
Dawn	0	0	0	0	0	0	0	0	0	0	0	0
Daylight	0	0	0	0	0	0	0	0	0	0	6	6
Dusk	0	0	0	0	0	0	0	0	0	0	0	0
Unknown	0	0	0	0	0	0	0	0	0	0	0	0
Severe Crosswinds												
Dark - Lighted	0	0	0	0	0	0	0	0	0	0	0	0
Dark - Not Lighted	0	0	0	0	0	0	0	0	0	0	0	0
Dark - Unknown Lighting	0	0	0	0	0	0	0	0	0	0	0	0
Dawn	0	0	0	0	0	0	0	0	0	0	0	0
Daylight	0	0	0	0	0	0	0	0	0	0	0	0
Dusk	0	0	0	0	0	0	0	0	0	0	0	0
Unknown	0	0	0	0	0	0	0	0	0	0	0	0

Crash Summary II - Characteristics

Crashes by Weather, Light Condition and Road Surface

Weather Light	Dry	Ice/Frost	Mud, Dirt, Gravel	Oil	Other	Sand	Slush	Snow	Unknown	Water (Standing, Moving)	Wet	Total
Sleet, Hail (Freezing Rain or Drizzle)												
Dark - Lighted	0	0	0	0	0	0	0	0	0	0	0	0
Dark - Not Lighted	0	0	0	0	0	0	0	0	0	0	0	0
Dark - Unknown Lighting	0	0	0	0	0	0	0	0	0	0	0	0
Dawn	0	0	0	0	0	0	0	0	0	0	0	0
Daylight	0	0	0	0	0	0	0	0	0	0	0	0
Dusk	0	0	0	0	0	0	0	0	0	0	0	0
Unknown	0	0	0	0	0	0	0	0	0	0	0	0
Snow												
Dark - Lighted	0	0	0	0	0	0	0	1	0	0	0	1
Dark - Not Lighted	0	0	0	0	0	0	0	0	0	0	0	0
Dark - Unknown Lighting	0	0	0	0	0	0	0	0	0	0	0	0
Dawn	0	0	0	0	0	0	0	0	0	0	0	0
Daylight	0	0	0	0	0	0	1	2	0	0	0	3
Dusk	0	0	0	0	0	0	0	0	0	0	0	0
Unknown	0	0	0	0	0	0	0	0	0	0	0	0
TOTAL	**63**	**1**	**0**	**0**	**0**	**0**	**1**	**3**	**0**	**0**	**15**	**83**

36: Zone Related Design Standards (14-526(d) 5)

- Address Historic Preservation Design Review, if applicable

  Not applicable

- Address any applicable design review standards by zone

  Per the City of Portland Design Manual(d)(1) a,c-I development in a B-2 Commercial Business the buildings have been placed to create an urban street wall, the dedicated mixed-use retail building includes windows along street frontage that are transparent and installed at a height to provide views by passersby. The façade character is oriented in a manner so that active and public portions of buildings create an active presence along the sidewalk. Building materials are compatible with the surrounding apartment buildings and other nearby commercial uses. See architectural plans included in this site plan submittal package.

  Landscaping will screen views to/from the project site from abutting properties. We understand that a densely planted landscape buffer and/or fencing is required to protect neighboring properties from development impacts such as lighting, parking, traffic, noise, odor, smoke or other incompatible uses.

- Address submission requirements from Design Manual, page 1, addressing neighborhood context

  The enclosed architectural plans and renderings address the proposed development and include building elevations, floor plans, color and proposed finishes. The plans as presented are progress only and are subject to revision. Final plans will be submitted to the City, as required.

- Description of exterior materials, color, finish, and samples

  See Architectural Plans for the proposed colors and finishes table.

11: Access and Circulation (14-526(a)2a)

- Access and internal circulation, addressing ADA access

  (i) The development provides safe and reasonable site access and provisions for internal circulation for all users of the site and complies with the standards set forth in Section 1 of the Technical Manual. Please see the site plans.

- Access and egress impacts on traffic flows

  (ii) The points of access and egress are located to avoid conflicts with the existing turning movements and traffic flows. Please see the site plan.

37: Construction Management Plan

August 28, 2018

City of Portland

1884 Forest Avenue – Pine State Family Mart

Applicant: John Chau

Purpose:

Construction Management Plans shall be depicted on the projects site plan and will include the overall planning, coordination, and control of a construction site, including phases as applicable, from beginning to completion. The City's goal for a construction management plan is to support a safe construction site and protect the public safety, accessibility (including preserving accessible pedestrian, bicycle, and vehicular modes of transport throughout the city), and welfare during construction. In addition, the construction management plan shall minimize construction impacts in their duration and magnitude to the surrounding area and develop an effective communication process for resolving concerns and conflicts.

Project Narrative:

The applicant/developer is proposing a new mixed-use retail building and a convenience store/gas station at 1884 Forest Avenue (Route 302) in the City of Portland. This project will disturb approximately 1.61 acres and the work will include:

1. Install erosion control measures and construction entrance;
2. Strip and stockpile loam for reuse;
3. Excavate and stockpile borrow;
4. Coordination with respective utilities regarding connections and required inspections;
5. Cut Forest Avenue and Riverton Drive, as necessary for utilities service connections;
6. Sanitary sewer connection coordination at existing main;
7. Preparation and utilities and drainage;
8. Installation of subsurface under-drained soil filters;
9. Building pads and parking preparation;
10. Installation of access drive/parking base course;
11. Installation of binder course of asphalt for drives/parking;
12. Building construction;
13. Service connections;
14. Final grading and drive/parking wearing course asphalt installation;
15. Installation landscaping;
16. Dumpster placement;
17. Loam, seed and mulch or sod to disturbed areas;
18. Temporary erosion control measures removed.

Performance Guarantees, Inspection Fees, Preconstruction Meeting, and Permits:
As a Level III Site Plan review, the developer of the project will be required to submit a performance guarantee for the proposed infrastructure work. This performance guarantee and site development inspection fees will be based upon a cost estimate submitted and approved by the City. The guarantee will be a letter of credit from an approved bank or credit union, deposited in a bank-held escrow account or a City- held escrow account. These fees/guarantees will need to be paid and in place prior to scheduling the pre-construction meeting.

As this project involves work within the right-of-way, the contractor will be responsible for obtaining street opening and street occupancy permits form the Department of Public Works. All construction in the right-of-way shall conform to Chapter 25 and all sewer and stormwater construction/connections shall conform to Chapters 24 & 32 of the Land Use Code. These permits will be for the connection to existing utilities and the drive connection at Forest Avenue and Riverton Drive. Work will be performed in conformance with applicable utility company standards. No blasting in anticipated for this project.

Construction Administration and Communication:
This project will be managed by a representation of the developer, Two Eisenhower Drive LLC along with a project manager from the land development construction firm hired by the developer.

1. Contact Person and contact information:
   - Developer : John Chau, (207761-0858
   - Site Contractor: TBD.
   - Engineer (Sebago Technics, Inc.): Jim Seymour, P.E., (207) 200-2083.
2. Signage will be placed at the site that will include the above contact information. This signage will be removed when the infrastructure for the project are complete.
3. The representative for the contractor /developer will reach out to adjacent abutter to notify them of the commencement of constructions and the proposed time frame to complete the infrastructure/roadway improvements for the project.

Construction Schedule*:
- Site Plan Approval: Expected –Autumn 2018.
- Preconstruction Meeting: November 2018
- Site preparation: Approximately 6 weeks.
- Stormwater management features, utilities, building construction: ± 24 weeks
- Expected Completion – Approximately June 2019. Paving – Spring 2019.

* Dates are subject to change at the discretion of the engineer, depending on construction progress.

Estimated construction time: ---------- 32 Weeks (8 Months)
Erosion Control Measures Placed: ---------- Week 1
Site clearing and grubbing ---------- Weeks 2-4
Construction of drive subbase for access ---------- Week 4

Stormwater and Utility Improvements ----------Weeks 4 – 20
Final yard grading and compaction ---------- Week 20-22
Final drive/parking paving ----------Week 22
Landscaping and seeding on prepared areas----------Week 24
Biweekly monitoring of vegetative growth ---------- Week 26-32
Replanting/seeding, if needed ---------- Week 26-32
Removal of erosion control devices ----------Upon Final Project Completion

1. From September 1st to May 31st, no person shall engage in construction activities generating noise exceeding fifty (50) decibels, between the hours of 7:00 p.m. and 7:00 a.m., of the following day within five hundred (500) feet of any buildings. From June 1st to August 31st construction activity may continue until 8:00 p.m.
2. Extended Hours or Night Work: Pursuant to Section 17-18, this section not apply to emergency utility work or "Situations where the public works authority or the office of building inspections determines that the construction activity is of a unique character which cannot reasonably be completed or performed during the permitted hours and which is not of a recurring nature, provided that prior to engaging in such activity the contractor or his representatives gives notice of the time and scope of such proposed activity, the notice to be given in a manner approved by the public works authority."
3. Pursuant to Section 25-129: "Each permittee shall conduct and carry out excavation work in such manner as to avoid unnecessary inconvenience and annoyance to the general public and occupants of neighboring property. To the fullest extent practicable, the permittee shall take appropriate measures to reduce noise, dust and unsightly debris in the performance of the excavation work. Excavation work, including the use of any tool, appliance, or equipment, shall be performed between the hours of 7:00 a.m. and 10:00 p.m. only, exclusive of emergency work. Time waiver requests may be submitted to the public works authority for work outside of this time period and will be subject to neighborhood concerns. Excavation work shall not occur on Sundays, holidays or on major holiday weekends, unless expressly authorized by the public works authority or as a result of emergency need.
4. If allowed, no construction activity shall begin before 8:00 a.m. on a Saturday, Sunday or legal holiday.
5. All deliveries for materials will comply with the noise requirements listed above or be restricted to the hours allowed for construction work.

Security and Public Safety:

1. Prior to commencing construction, site contractor shall install a "Construction Ahead" signs to warn bicyclists and motorists of construction with the area.
2. Contractor shall be responsible for the setup of construction staging area before construction begins. Contractor may provide fencing for staging area at their discretion. Fenced in areas shall be provided with gates passable by emergency vehicles and equipped with a Knox locking device.

3. Contractor shall be responsible for the safe storage of materials or equipment on-site.
4. Contractor shall have weekly tailgate meetings which shall include discussion relative to security and public security.
5. Contractor shall develop a fire safety and emergency protocol and contact the nearest fire station to advise them of the ongoing construction project.
6. All excavations with the right-of-way shall be filled or plated at night. Excavations within the site shall be provided with adequate barricades or warnings (i.e. construction area tape around excavation) at night.

Construction Permitting and Traffic Control Plans:

1. Construction Activity in Public Streets: Construction activity in the public right-of-way is controlled by Chapter 25 Article VII of the City Code of Ordinances. Required licenses and permits, restrictions on activity, and fees & area are outlined in that Chapter. Rules and Regulations for Excavation Activity are available through the Street Opening Clerk at the Department of Public Works. At no time can construction activity including delivery vehicles close or block streets or affect public safety access without prior notice and approval of the Department of Public Works.
2. Sewer and Stormwater: Sewer and stormwater water system connections are controlled by Chapters 24 and 32 of the City Code of Ordinance. Required permits for new connections and/or abandonment of existing connections are available through the Street Opening Clerk at the Department of Public Works. Rules and Regulations for these utility systems are available through the City Engineer's office of the Department of Public Works and in Section II of the Technical Manual.
3. Traffic Control Plans: Construction activity that impacts the existing public street system must be controlled to protect the safety of the construction workers and all modes of the traveling public.
    a. Contractor will be required to submit Maintenance of Traffic Plans for all construction within the right-of-way of Riverside Industrial Parkway.
    b. Flaggers will be required for temporary lane closures for construction.
    c. Traffic Control signs shall not be placed where they are an obstruction to bicycles or pedestrians.

Site Management and Controls:

1. The land development contractor shall be responsible for the site managements during construction of site infrastructure. Building contractors will be responsible for the building site management.
2. Contractor will be responsible for providing and maintaining a dumpster during construction.
3. Contractor will install and maintain the construction entrance as shown on the plans and will maintain Riverton Drive by including sweeping as necessary for removal of tracked materials.
4. Contractor shall be responsible for maintaining construction BMP's and executing good housekeeping measures as depicted on the approved plans and as included in the Inspection, Maintenance and Housekeeping Plan.

5. Dust controls: The construction shall comply with Portland's requirements under Section 25-129 on Noise, dust and debris.
6. Noise: The construction shall comply with Portland's requirements under Section 17-18 of the City Code and Section 25-129 on Noise, dust and debris. The Contractor and City will be responsible for adjusting work should noise become an issue.
7. Rodent Control is not expected for this project. Should it become necessary, it will be provided, if applicable, by a professional exterminator and consistent with Chapter 22 of the City Code or City of Portland Public Works.
8. Snow Removal: Pursuant to Section 25-173 Contractors to ensure a safe means of travel within the work zone.
    1) Snow/ice removal or commence automatically from (1" of snow and up) or Ice
    2) Remove snow as needed within the work zone, including parking spaces & not to block any driveways or site lines with the piles of snow.
    3) Clear all walks & ramps with the work zone
    4) Sand or Salt as needed
    5) Clear all basin basin or drainage structures to help snow melt
    6) This would include Monday-Friday Sat/Sunday/Holidays.
9. Site management and controls shall be discussed at each tailgate meeting including maintenance of BMP's and good housekeeping measures.

Erosion Control and Preservation of Trees:

1. The site contractor shall install all erosion and sedimentation controls as depicted on the approved erosion and sedimentation control plan prior to the pre-construction meeting for inspection by the City. The contractor shall regularly inspect the control measures, no less than weekly and after significant storm events, and maintain any installed temporary or permanent stormwater management systems in working order. The contractor shall document all inspection activities and corrective actions and be prepared to provide these documents for inspection by the City, Maine Department of Environmental Protection upon request.
2. The site contractor shall maintain storage and of materials and equipment away from the tree drip lines in an effort to preserve vegetation on adjacent properties. Due to development constraints, no vegetation will be preserved on the development site.

Construction Staging Area:

1. A Construction Management Plan is described on the site plan and depicts the location of the material (open storage) and equipment storage area. The exact location of these areas shall be up to the contractor but should be sufficiently away from any trees at the designated construction limit line.
2. Delivery Truck Holding Areas On-Site: The delivery holding area shall be adjacent to the site storage area shown on the plan and shall not be blocked during construction. On days when the construction activities require multiple truck deliveries, these deliveries will be carefully scheduled so that there is always adequate on-site area for the holding of the trucks until they can be unloaded. Once at the site all vehicles well be brought within the property and will make every attempt to avoid queueing on public streets.

3. Delivery Truck Holding Areas Off-Site: In the event that adequate on-site area for holding of trucks is not available, the contractor shall provide an area along the adjacent shoulder of Riverton Drive for offloading. This area shall be provided within the buffer area of a maintenance of traffic area with the appropriate cones, advanced warning signs and flaggers as necessary. All off-loading shall occur from the project side of the truck and not within the roadway.

Parking During Construction:

1. Construction Parking: Parking for construction workers shall be on the site as indicted on the Construction Management Plan. No parking shall occur along Forest Avenue. If sufficient space is not available on-site for parking, contractor shall make other parking arrangements and have workers brought or carpooled to the site.
2. Truck Routes and Volumes: All deliveries to and from site shall occur from Route 302 (Forest Avenue) or Riverside Street and proceed along Forest Avenue to the site. Drivers for the contractors shall be advised weekly of the residential nature of portions of the site approach over Riverside Street and Forest Avenue in the weekly tailgate meetings or by some other appropriate communication.

Prepared by:
Sebago Technics, Inc.

NOTE: MAINTENANCE OF TRAFFIC (MOT) SHOWN ONLY FOR CONSTRUCTION OF ENTRANCES. CONTRACTOR SHALL BE RESPONSIBLE FOR PROVIDING ALL MOT FOR WORK WITHIN THE RIGHT-OF-WAY PER MDOT AND MUTCD REQUIREMENTS.

INSTALL ADVANCE WARNING SIGNS, TRAFFIC CONES AND PROVIDE FLAGGERS FOR ANY TEMPORARY LANE CLOSURES (TYPICAL BOTH DIRECTIONS OF TRAFFIC.

GRADING & EROSION NOTES

1. SIDESLOPES SHALL NOT BE STEEPER THAN 3:1 (H:V) EXCEPT AS OTHERWISE IDENTIFIED ON THIS PLAN. ALL SIDESLOPES STEEPER THAN 3:1 (H: V) SHALL BE LINED WITH EROSION CONTROL BLANKET, OR ADDITIONAL MEASURES AS INDICATED.
2. ALL SEDIMENT AND EROSION CONTROL MEASURES SHALL BE INSTALLED IN ACCORDANCE WITH "MAINE EROSION AND SEDIMENT CONTROL BMPS" MANUAL PUBLISHED BY BUREAU OF LAND AND WATER QUALITY MAINE DEPARTMENT OF ENVIRONMENTAL PROTECTION, MARCH 2003 OR LATEST EDITION. IT SHALL BE THE RESPONSIBILITY OF THE CONTRACTOR TO POSSESS A COPY OF THE EROSION CONTROL PLAN AT ALL TIMES.
3. ALL AREAS DISTURBED DURING CONSTRUCTION AND NOT RESTORED WITH IMPERVIOUS SURFACES (BUILDINGS, PAVEMENT, WALKS, ETC.) SHALL RECIEVE LOAM AND SEED PER DETAIL.

STABILIZED CONSTRUCTION ENTRANCE (TYP)

PROVIDE TEMPORARY INLET PROTECTION DURING CONSTRUCTION (TYPICAL)

WORKER PARKING

PROVIDE FILTER BARRIER AT STOCKPILES

STORAGE AREA FOR CONTRACTOR EQUIPMENT AND MATERIALS. IF CONTRACTOR ELECTS TO CONSTRUCT FENCING, GATES SHALL HAVE KNOX LOCKING DEVICE.

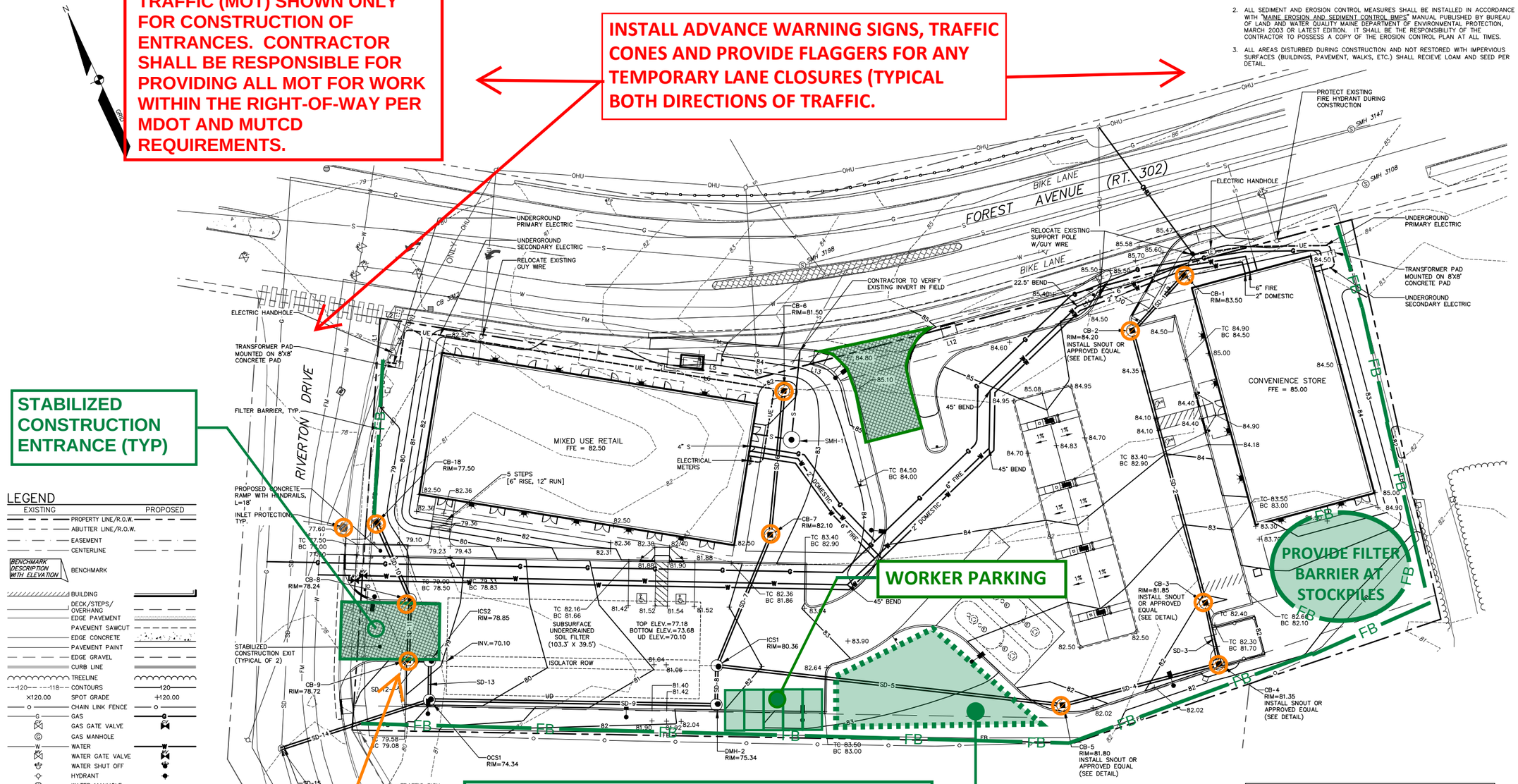

LEGEND

EXISTING	PROPOSED
PROPERTY LINE/R.O.W.	
ABUTTER LINE/R.O.W.	
EASEMENT	
CENTERLINE	
BENCHMARK DESCRIPTION WITH ELEVATION	BENCHMARK
BUILDING	
DECK/STEPS/ OVERHANG	
EDGE PAVEMENT	
PAVEMENT SAWCUT	
EDGE CONCRETE	
PAVEMENT PAINT	
EDGE GRAVEL	
CURB LINE	
TREELINE	
CONTOURS	120
SPOT GRADE	+120.00
CHAIN LINK FENCE	
GAS	G
GAS GATE VALVE	
GAS MANHOLE	
WATER	W
WATER GATE VALVE	
WATER SHUT OFF	
HYDRANT	
WATER MANHOLE	
WELL	
SANITARY SEWER	S
FORCE MAIN	FM
SANITARY MANHOLE	
STORM DRAIN	SD
UNDER DRAIN	UD
DRAINAGE MANHOLE	
CATCH BASIN	
OVERHEAD UTILITY	OHU
UNDERGROUND UTILITY	UGU
TRANSFORMER PAD	
ELECTRICAL MANHOLE	
ELECTRIC METER	
TELEPHONE MANHOLE	
LIGHT POLE	
UTILITY POLE	
GUY WIRE	
EROSION CONTROL BLANKET	
FILTER BARRIER	FB
RIPRAP	
CHECK DAM	
INLET PROTECTION	

GRAPHIC SCALE
20 0 10 20 40
(IN FEET)
1 INCH = 20 FT.

STORM DRAIN PIPE DATA

NAME	SIZE	LENGTH	SLOPE
SD-1	12"	28'	0.53%
SD-2	12"	111'	0.49%
SD-3	12"	22'	0.46%
SD-4	12"	62'	0.57%
SD-5	12"	138'	0.51%
SD-6	12"	55'	0.64%
SD-7	12"	54'	0.82%
SD-8	12"	12'	0.63%
SD-9	12"	113'	0.78%
SD-10	12"	31'	0.61%
SD-11	12"	21'	0.58%
SD-12	12"	5'	0.91%

STORM DRAIN STRUCTURE DATA

STRUCTURE	RIM	INV. IN	INV. OUT:	DIAM.
CB-1	83.50		79.45 (SD-1)	???
CB-2	84.20	79.30 (SD-1)	79.20 (SD-2)	48"
CB-3	81.85	78.65 (SD-2)	78.55 (SD-3)	48"
CB-4	81.35	78.45 (SD-3)	78.35 (SD-4)	48"
CB-5	81.80	78.00 (SD-4)	77.90 (SD-5)	48"
CB-6	81.50		78.10 (SD-6)	48"
CB-7	82.10	77.75 (SD-6)	77.65 (SD-7)	48"
CB-8	78.24	73.34 (SD-10)	73.24 (SD-11)	48"
CB-9	78.72	73.12 (SD-11)	73.02 (SD-12)	48"
CB-18	77.50		73.55 (SD-10)	???
DMH-2	75.34	71.50 (SD-8)	71.40 (SD-9)	48"
ICS1	80.36	77.18 (SD-5) 77.18 (SD-7)	71.60 (SD-8)	48"
ICS2	78.85	72.98 (SD-12)	70.00 (SD-13)	48"

CONSTRUCTION MANAGEMENT PLAN

JAMES R. SEYMOUR, PE 9984
STATE OF MAINE — JAMES R. SEYMOUR — No. 9984 — REGISTERED PROFESSIONAL ENGINEER
09-10-18

DESIGNED	CHECKED
SAH	RLM

REV.:	BY:	DATE:	STATUS:
A	RLM	9-10-18	SUBMIT TO CITY OF PORTLAND

THIS PLAN SHALL NOT BE MODIFIED WITHOUT WRITTEN PERMISSION FROM SEBAGO TECHNICS, INC. ANY ALTERATIONS, AUTHORIZED OR OTHERWISE, SHALL BE AT THE USER'S SOLE RISK AND WITHOUT LIABILITY TO SEBAGO TECHNICS, INC.

SEBAGO TECHNICS
WWW.SEBAGOTECHNICS.COM
75 John Roberts Rd.
Suite 4A
South Portland, ME 04106
Tel. 207-200-2100

GRADING & UTILITY PLAN
OF:
PINE STATE FAMILY MART
1884 FOREST AVENUE
PORTLAND, MAINE 04103
FOR:
JOHN CHAU
75 ARCADIA ST.
PORTLAND, MAINE 04103

PROJECT NO.	SCALE
11142	1" = 20'

SHEET 4 OF 9

11142GU.dwg, TAB:GU

12: Loading and Servicing (14-526 (a) 2 b)

- Load and servicing needs, route and travel way geometrics for deliveries
- Turning templates for delivery vehicles, if applicable

(i) The site will be serviced occasionally by delivery vehicles. Access to the site includes a clear route that allows safe turning and backing for the anticipated vehicle lengths that will not impede site access, vehicle circulation, pedestrian movement, or affect the designated parking on the site.

Att. LL

Camden NATIONAL BANK

November 13, 2018

Re: 1884 Forest Avenue, Portland, Maine Development Project ("Project")

To Whom It May Concern:

On behalf of Camden National Bank I am pleased to provide this letter in support of Sinoun Chau and Phuong Neang (collectively the "Developer") for the planned development of a convenience store and gas station at 1884 Forest Avenue in Portland ("Project"). Based on our review of the financial elements of the Project, we believe that the applicant has the ability to get the financing needed to support a budgeted Project cost of $2,120,124.

While this letter of support is not a commitment to lend, the Bank would welcome the opportunity to be a resource to the Developer for financing. This letter shall in no way obligate the bank, or the Developer, beyond the scope and intent of this letter.

Please feel free to contact me with questions.

Sincerely,

Elliott Barry, Senior Vice President
Commercial Banking Officer
207.344.6852
ebarry@camdennational.com

13: Sidewalks (14-526 (a) 2c)

- Sidewalks and condition along street frontages and internal walkways

  (i) There is an existing sidewalk along Forest Avenue that will be interrupted for the project entry drives and will be modified to provide internal walkway connections.

  (ii) Continuous internal walkways are proposed between the existing public sidewalks located on Forest Avenue and Riverton Drive. A new transit shelter is proposed on Forest Avenue at the existing Metro bus stop. The transit stop shelter is being coordinated between Gorrill-Palmer Consulting Engineers and Greater Portland Metro.

  (iii) The public will be provided pedestrian connectivity to and through the site and to the retail businesses by a proposed sidewalk tying into the entrance of/and onto Riverton Drive.

- Engineered details for ADA ramps and public sidewalk details meeting sidewalk materials policy and ADA ramp construction details as applicable (Technical Manual, Section 1)

  Public sidewalk connections, building access walks including ADA ramps and details are shown on the enclosed site plans. The walks will be constructed in accordance with the City requirements shown in the Technical Manual, Section 1.

14: Public Transit (14-526(a)3, if applicable

- Existing available transit services
  The proposed site is located on the Greater Portland Metro bus line. There is an existing bus stop located along the Forest Avenue street frontage.

- Proposed site plan design details, such as easement, pad base, and shelter

  The project does not include residential development, however, the proposed project includes provision and design that includes the installation of a METRO shelter with connection to the public sidewalk. The proposed shelter site is located in front of the proposed mixed-use retail building as shown on the enclosed site plans. The design is being coordinated between Sebago Technics, Gorrill-Palmer Consulting Engineers and Greater Portland METRO.

15: Off-Street Parking: Vehicle & Motorcycle/Scooter) (14-526 (a) 4 a and c)

- Expected parking demand, proposed parking supply, ADA parking, and applicable Zoning Requirements

  a. Location and required number of vehicle spaces
  The proposed parking area is appropriate for the intended use/zone and the spaces/aisles meet the dimensional standard as detailed in Section 1 of the City Technical Standard. Thirty-seven spaces are required and forty-eight are proposed. Please see the site plans.

  b. Location and required number of bicycle parking spaces
  Ten bicycle parking spaces are required based on the proposed vehicle parking spaces (2 bicycle per 10 vehicle spaces). The locations shown conform to the *Bicycle Parking Rack Placement Criteria* as illustrated in Figure I-33 of the City of Portland Technical manual.

  c. Motorcycle/scooter parking
  There is adequate off-street parking to allow motorcycle/scooter parking. Please see site plan.

- Address Technical Manual standards (Section 1) for curb cut separation and parking lot layout and locate on site plan
  The proposed curb cut separation and parking lot layout is designed in accordance with Section 1 of the City Technical Standard as shown on the accompanying plan set.

16: Bicycle Parking (14-526(a)4b)

- Address bicycle parking requirements and identify locations on-site

  b. Ten secure bicycle parking spaces are proposed for the project. The bicycle parking location is shown on the site plan and the number of spaces meets the requirements of this section.

- Constuction details for bike racks (Technical Manual, Section 1)

  A bike rack detail is included in the site plans.

17: Snow Storage (14-526(a)d)

- Management plan for snow removal and locate snow storage areas on plan

  (i) The designated snow storage area is shown on the site plan.

  (ii) The snow storage area will not adversely impact stormwater management systems and do not encroach on pedestrian, parking or accessways.

18: Traffic Design Management (TDM) (14-526(a)5)

- Develop TDM with Trip Reduction Targets and Strategies

  Not applicable. The project does not meet the types of development required to implement a TMD Plan.

19: Preservation of Significant Natural Features (14-526 (b) 1), if applicable

- Trees, plants, habitats listed on State or Federal list of endangered or threatened

  (i) The State of Maine Department of Agriculture, Conservation and Forestry Natural Areas Program (MNAP) did not identify known mapped significant natural features within the project site. Reference is made to the MNAP letter, this section. The Beginning with Habitat (BWH)-Primary Map 2, High Value Plants and Animals – Portland does not identify plant or animal habitats within the project area.

  (ii) Per the U.S. Department of Interior, Fish and Wildlife Service, no critical habitats are identified within the project area. The official species list is limited to the threatened Northern Long-eared bat *Myotis septentionalis*. No know hibernacula occurs on the site and tree removal will not take place during the spring-summer bat pup-rearing season. See attached letter received from the Maine Ecological Field Services Office, this section.

- High and moderate value waterfowl and wading habitat

  (iii) A site review request has been requested of Maine Department of Inland Fisheries and Wildlife. Available online mapping and the BWH map for Portland does not identify high or moderate waterfowl or wading habitat within the site. A copy of the MDIFW response will be forwarded to the City upon receipt.

- Aquifers on Casco Bay Islands

  (iv) Not applicable.

- Waterbodies (including wetlands, watercourses, significant vernal pools and floodplains)

  (v) No waterbodies are located on the proposed project site.

  Per review of the City of Portland GIS Map Viewer-Flood Map (1986 FEMA flood boundaries), the project is not located in a flood plain.

- Proposed preservation areas and protection measures

  No dedicated preservation areas or protection measures are proposed as part of the Pine State Family Mart project.

- Documentation from environmental consultants determinations from applicable state agencies

  Reference is made to the aforementioned correspondence regarding natural features.

STATE OF MAINE
DEPARTMENT OF AGRICULTURE, CONSERVATION & FORESTRY
93 STATE HOUSE STATION
AUGUSTA, MAINE 04333

PAUL R. LEPAGE
GOVERNOR

WALTER E. WHITCOMB
COMMISSIONER

September 4, 2018

Stefanie Nichols
Sebago Technics
75 John Roberts Road, Suite 4A
South Portland, ME 04106

Via email: snichols@sebagotechnics.com

Re: Rare and exemplary botanical features in proximity to: #11142, Chau Property, 1884 Forest Ave, Portland, Maine

Dear Ms. Nichols:

I have searched the Natural Areas Program's Biological and Conservation Data System files in response to your request received August 28, 2018 for information on the presence of rare or unique botanical features documented from the vicinity of the project in Portland, Maine. Rare and unique botanical features include the habitat of rare, threatened, or endangered plant species and unique or exemplary natural communities. Our review involves examining maps, manual and computerized records, other sources of information such as scientific articles or published references, and the personal knowledge of staff or cooperating experts.

Our official response covers only botanical features. For authoritative information and official response for zoological features you must make a similar request to the Maine Department of Inland Fisheries and Wildlife, 284 State Street, Augusta, Maine 04333.

According to the information currently in our Biological and Conservation Data System files, there are no rare botanical features documented specifically within the project area. This lack of data may indicate minimal survey efforts rather than confirm the absence of rare botanical features. You may want to have the site inventoried by a qualified field biologist to ensure that no undocumented rare features are inadvertently harmed.

If a field survey of the project area is conducted, please refer to the enclosed supplemental information regarding rare and exemplary botanical features documented to occur in the vicinity of the project site. The list may include information on features that have been known to occur historically in the area as well as recently field-verified information. While historic records have not been documented in several years, they may persist in the area if suitable habitat exists. The enclosed list identifies features with potential to occur in the area, and it should be considered if you choose to conduct field surveys.

This finding is available and appropriate for preparation and review of environmental assessments, but it is not a substitute for on-site surveys. Comprehensive field surveys do not exist for all natural areas in Maine, and in the absence of a specific field investigation, the Maine Natural Areas Program cannot provide a definitive statement on the presence or absence of unusual natural features at this site.

MOLLY DOCHERTY, DIRECTOR
MAINE NATURAL AREAS PROGRAM

DEPARTMENT OF Agriculture Conservation & Forestry

PHONE: (207) 287-8044
FAX: (207) 287-8040
WWW.MAINE.GOV/DACF/MNAP

The Natural Areas Program is continuously working to achieve a more comprehensive database of exemplary natural features in Maine. We would appreciate the contribution of any information obtained should you decide to do field work. The Natural Areas Program welcomes coordination with individuals or organizations proposing environmental alteration, or conducting environmental assessments. If, however, data provided by the Natural Areas Program are to be published in any form, the Program should be informed at the outset and credited as the source.

The Natural Areas Program has instituted a fee structure of $75.00 an hour to recover the actual cost of processing your request for information. You will receive an invoice for $150.00 for two hours of our services.

Thank you for using the Natural Areas Program in the environmental review process. Please do not hesitate to contact me if you have further questions about the Natural Areas Program or about rare or unique botanical features on this site.

Sincerely,

Kristen Puryear | Ecologist | Maine Natural Areas Program
207-287-8043 | kristen.puryear@maine.gov

Rare and Exemplary Botanical Features within 4 miles of
Project: 11142, Chau Property, 1884 Forest Ave, Portland, Maine

Common Name	State Status	State Rank	Global Rank	Date Last Observed	Occurrence Number	Habitat
Allegheny Vine						
	E	S1	G4	1860-10	9	Rocky summits and outcrops (non-forested, upland),Dry barrens (partly forested, upland)
American Sea-blite						
	T	S2	G5	1932-09-12	5	Tidal wetland (non-forested, wetland)
	T	S2	G5	2011-08-15	17	Tidal wetland (non-forested, wetland)
Bottlebrush Grass						
	SC	S3	G5	1905-09-13	10	Hardwood to mixed forest (forest, upland)
Broad Beech Fern						
	SC	S2	G5	1872-08	15	Hardwood to mixed forest (forest, upland)
Clothed Sedge						
	E	S1	G5	2000-06-06	5	Dry barrens (partly forested, upland)
Ebony Spleenwort						
	SC	S2	G5	1910-06-06	10	Rocky summits and outcrops (non-forested, upland),Hardwood to mixed forest (forest, upland)
Engelmann's Spikerush						
	PE	SH	G4G5	1916-08-31	2	Open wetland, not coastal nor rivershore (non-forested, wetland)
Fern-leaved False Foxglove						
	SC	S3	G5	1902-09-02	13	Dry barrens (partly forested, upland),Hardwood to mixed forest (forest, upland)
Great Blue Lobelia						
	PE	SX	G5	1905-09	3	Forested wetland,Non-tidal rivershore (non-forested, seasonally wet)
Hollow Joe-pye Weed						
	SC	S2	G5?	2014-06-18	24	Open wetland, not coastal nor rivershore (non-forested, wetland),Old field/roadside (non-forested, wetland or upland)
	SC	S2	G5?	2007-10-22	18	Open wetland, not coastal nor rivershore (non-forested, wetland),Old

Rare and Exemplary Botanical Features within 4 miles of
Project: 11142, Chau Property, 1884 Forest Ave, Portland, Maine

Common Name	State Status	State Rank	Global Rank	Date Last Observed	Occurrence Number	Habitat
						field/roadside (non-forested, wetland or upland)
	SC	S2	G5?	2011-08-04	19	Open wetland, not coastal nor rivershore (non-forested, wetland),Old field/roadside (non-forested, wetland or upland)
Horned Pondweed						
	SC	S2	G5	1913-09-13	9	Tidal wetland (non-forested, wetland)
Marsh Milkwort						
	PE	SH	G5T4	1903-08-18	1	Dry barrens (partly forested, upland),Open wetland, not coastal nor rivershore (non-forested, wetland)
Missouri Rockcress						
	T	S1	G5	1905-06-11	5	Rocky summits and outcrops (non-forested, upland),Hardwood to mixed forest (forest, upland)
Mountain Honeysuckle						
	E	S2	G5	2014-08-03	14	Dry barrens (partly forested, upland),Hardwood to mixed forest (forest, upland)
	E	S2	G5	2007-10-05	11	Dry barrens (partly forested, upland),Hardwood to mixed forest (forest, upland)
	E	S2	G5	2015-07-07	17	Dry barrens (partly forested, upland),Hardwood to mixed forest (forest, upland)
Pitch Pine Woodland						
	<null>	S3	G2	2005-12-08	28	Rocky summits and outcrops (non-forested, upland)
Small Reed Grass						
	SC	S3	G5	2011-08-28	18	Old field/roadside (non-forested, wetland or upland)
Spotted Pondweed						
	T	S1	G5	1995-10-01	3	Open water (non-forested, wetland)
Tidal Marsh Estuary Ecosystem						
	<null>	S3	GNR	2011-08-25	8	Tidal wetland (non-forested, wetland)
Upright Bindweed						

Rare and Exemplary Botanical Features within 4 miles of
Project: 11142, Chau Property, 1884 Forest Ave, Portland, Maine

Common Name	State Status	State Rank	Global Rank	Date Last Observed	Occurrence Number	Habitat
	T	S2	G4G5	2007-06-28	5	Dry barrens (partly forested, upland),Old field/roadside (non-forested, wetland or upland)
Variable Sedge						
	E	S1	G3	1911	8	Dry barrens (partly forested, upland),Hardwood to mixed forest (forest, upland)
	E	S1	G3	1911-06-29	9	Dry barrens (partly forested, upland),Hardwood to mixed forest (forest, upland)
Vasey's Pondweed						
	SC	S2	G4	1901-08-04	7	Open water (non-forested, wetland)
Wild Garlic						
	SC	S2	G5	1918-07-16	6	Forested wetland,Hardwood to mixed forest (forest, upland)

STATE RARITY RANKS

S1 Critically imperiled in Maine because of extreme rarity (five or fewer occurrences or very few remaining individuals or acres) or because some aspect of its biology makes it especially vulnerable to extirpation from the State of Maine.

S2 Imperiled in Maine because of rarity (6-20 occurrences or few remaining individuals or acres) or because of other factors making it vulnerable to further decline.

S3 Rare in Maine (20-100 occurrences).

S4 Apparently secure in Maine.

S5 Demonstrably secure in Maine.

SU Under consideration for assigning rarity status; more information needed on threats or distribution.

SNR Not yet ranked.

SNA Rank not applicable.

S#? Current occurrence data suggests assigned rank, but lack of survey effort along with amount of potential habitat create uncertainty (e.g. S3?).

Note: **State Rarity Ranks** are determined by the Maine Natural Areas Program for rare plants and rare and exemplary natural communities and ecosystems. The Maine Department of Inland Fisheries and Wildlife determines State Rarity Ranks for animals.

GLOBAL RARITY RANKS

G1 Critically imperiled globally because of extreme rarity (five or fewer occurrences or very few remaining individuals or acres) or because some aspect of its biology makes it especially vulnerable to extinction.

G2 Globally imperiled because of rarity (6-20 occurrences or few remaining individuals or acres) or because of other factors making it vulnerable to further decline.

G3 Globally rare (20-100 occurrences).

G4 Apparently secure globally.

G5 Demonstrably secure globally.

GNR Not yet ranked.

Note: **Global Ranks** are determined by NatureServe.

STATE LEGAL STATUS

Note: State legal status is according to 5 M.R.S.A. § 13076-13079, which mandates the Department of Conservation to produce and biennially update the official list of Maine's **Endangered** and **Threatened** plants. The list is derived by a technical advisory committee of botanists who use data in the Natural Areas Program's database to recommend status changes to the Department of Conservation.

E ENDANGERED; Rare and in danger of being lost from the state in the foreseeable future; or federally listed as Endangered.

T THREATENED; Rare and, with further decline, could become endangered; or federally listed as Threatened.

NON-LEGAL STATUS

SC SPECIAL CONCERN; Rare in Maine, based on available information, but not sufficiently rare to be considered Threatened or Endangered.

PE Potentially Extirpated; Species has not been documented in Maine in past 20 years or loss of last known occurrence has been documented.

ELEMENT OCCURRENCE RANKS - EO RANKS

Element Occurrence ranks are used to describe the quality of a rare plant population or natural community based on three factors:

- **Size**: Size of community or population relative to other known examples in Maine. Community or population's viability, capability to maintain itself.
- **Condition**: For communities, condition includes presence of representative species, maturity of species, and evidence of human-caused disturbance. For plants, factors include species vigor and evidence of human-caused disturbance.
- **Landscape context**: Land uses and/or condition of natural communities surrounding the observed area. Ability of the observed community or population to be protected from effects of adjacent land uses.

These three factors are combined into an overall ranking of the feature of **A**, **B**, **C**, or **D**, where **A** indicates an **excellent** example of the community or population and **D** indicates a **poor** example of the community or population. A rank of **E** indicates that the community or population is **extant** but there is not enough data to assign a quality rank. The Maine Natural Areas Program tracks all occurrences of rare (S1-S3) plants and natural communities as well as A and B ranked common (S4-S5) natural communities.

Note: **Element Occurrence Ranks** are determined by the Maine Natural Areas Program for rare plants and rare and exemplary natural communities and ecosystems. The Maine Department of Inland Fisheries and Wildlife determines Element Occurrence ranks for animals.

Visit our website for more information on rare, threatened, and endangered species!
http://www.maine.gov/dacf/mnap

United States Department of the Interior

FISH AND WILDLIFE SERVICE
Maine Ecological Services Field Office
P. O. Box A
East Orland, ME 04431
Phone: (207) 469-7300 Fax: (207) 902-1588
http://www.fws.gov/mainefieldoffice/index.html

In Reply Refer To:
Consultation Code: 05E1ME00-2018-SLI-1029
Event Code: 05E1ME00-2018-E-02121
Project Name: Pine State Family Mart

August 28, 2018

Subject: List of threatened and endangered species that may occur in your proposed project location, and/or may be affected by your proposed project

To Whom It May Concern:

The enclosed species list identifies the threatened, endangered, candidate, and proposed species and designated or proposed critical habitat that may occur within the boundary of your proposed project or may be affected by your proposed project. This species list fulfills the requirements of the U.S. Fish and Wildlife Service (Service) under section 7(c) of the Endangered Species Act (Act) of 1973, as amended (16 U.S.C. 1531 et seq.).

New information based on updated surveys, changes in the abundance and distribution of species, changed habitat conditions, or other factors could change this list. Please feel free to contact us if you need more current information or assistance regarding the potential impacts to federally proposed, listed, and candidate species and federally designated and proposed critical habitat. Please note that under 50 CFR 402.12(e) of the regulations implementing section 7 of the Act, the accuracy of this species list should be verified after 90 days. This verification can be completed formally or informally as desired. The Service recommends that verification be completed by visiting the ECOS-IPaC Web site at regular intervals during project planning and implementation for updates to species lists and information. An updated list may be requested through the ECOS-IPaC system by completing the same process used to receive the enclosed list.

The purpose of the Act is to provide a means whereby threatened and endangered species and the ecosystems upon which they depend may be conserved. Under sections 7(a)(1) and 7(a)(2) of the Act and its implementing regulations (50 CFR 402 et seq.), Federal agencies are required to utilize their authorities to carry out programs for the conservation of threatened and endangered species and to determine whether projects may affect threatened and endangered species and/or designated critical habitat.

A Biological Assessment is required for construction projects (or other undertakings having similar physical impacts) that are major Federal actions significantly affecting the quality of the human environment as defined in the National Environmental Policy Act (42 U.S.C. 4332(2)(c)). For projects other than major construction activities, the Service suggests that a biological evaluation similar to a Biological Assessment be prepared to determine whether the project may affect listed or proposed species and designated or proposed critical habitat. Recommended contents of a Biological Assessment are described at 50 CFR 402.12.

If a Federal agency determines, based on the Biological Assessment or biological evaluation, that listed species or designated critical habitat may be affected by the proposed project, the agency is required to consult with the Service pursuant to 50 CFR 402. In addition, the Service recommends that candidate species, proposed species and proposed critical habitat be addressed within the consultation. More information on the regulations and procedures for section 7 consultation, including the role of permit or license applicants, can be found in the Endangered Species Consultation Handbook at: http://www.fws.gov/endangered/esa-library/pdf/TOC-GLOS.PDF

This species list also identifies candidate species under review for listing and those species that the Service considers species of concern. Candidate species have no protection under the Act but are included for consideration because they could be listed prior to completion of your project. Species of concern are those taxa whose conservation status is of concern to the Service (i.e., species previously known as Category 2 candidates), but for which further information is needed.

If a proposed project may affect only candidate species or species of concern, you are not required to prepare a Biological Assessment or biological evaluation or to consult with the Service. However, the Service recommends minimizing effects to these species to prevent future conflicts. Therefore, if early evaluation indicates that a project will affect a candidate species or species of concern, you may wish to request technical assistance from this office to identify appropriate minimization measures.

Please be aware that bald and golden eagles are not protected under the Endangered Species Act but are protected under the Bald and Golden Eagle Protection Act (16 U.S.C. 668 et seq.). Projects affecting these species may require development of an eagle conservation plan: http://www.fws.gov/windenergy/eagle_guidance.html Information on the location of bald eagle nests in Maine can be found on the Maine Field Office Web site: http://www.fws.gov/mainefieldoffice/Project%20review4.html

Additionally, wind energy projects should follow the wind energy guidelines: http://www.fws.gov/windenergy/ for minimizing impacts to migratory birds and bats. Projects may require development of an avian and bat protection plan.

Migratory birds are also a Service trust resource. Under the Migratory Bird Treaty Act, construction activities in grassland, wetland, stream, woodland, and other habitats that would result in the take of migratory birds, eggs, young, or active nests should be avoided. Guidance for minimizing impacts to migratory birds for projects including communications towers (e.g.,

cellular, digital television, radio, and emergency broadcast) can be found at: http://www.fws.gov/migratorybirds/CurrentBirdIssues/Hazards/towers/towers.htm and at: http://www.towerkill.com; and at: http://www.fws.gov/migratorybirds/CurrentBirdIssues/Hazards/towers/comtow.html

We appreciate your concern for threatened and endangered species. The Service encourages Federal agencies to include conservation of threatened and endangered species into their project planning to further the purposes of the Act. Please include the Consultation Tracking Number in the header of this letter with any request for consultation or correspondence about your project that you submit to our office.

Attachment(s):

- Official Species List

Official Species List

This list is provided pursuant to Section 7 of the Endangered Species Act, and fulfills the requirement for Federal agencies to "request of the Secretary of the Interior information whether any species which is listed or proposed to be listed may be present in the area of a proposed action".

This species list is provided by:

Maine Ecological Services Field Office
P. O. Box A
East Orland, ME 04431
(207) 469-7300

Project Summary

Consultation Code: 05E1ME00-2018-SLI-1029

Event Code: 05E1ME00-2018-E-02121

Project Name: Pine State Family Mart

Project Type: DEVELOPMENT

Project Description: Scope: Development of mixed use retail building and a convenience store/ gas Station

+/- 1.61 Acre lot

Timing: 2018-2019

Project Location:

Approximate location of the project can be viewed in Google Maps: https://www.google.com/maps/place/43.69991417790426N70.3196235655184W



Counties: Cumberland, ME

Endangered Species Act Species

There is a total of 1 threatened, endangered, or candidate species on this species list.

Species on this list should be considered in an effects analysis for your project and could include species that exist in another geographic area. For example, certain fish may appear on the species list because a project could affect downstream species.

IPaC does not display listed species or critical habitats under the sole jurisdiction of NOAA Fisheries[1], as USFWS does not have the authority to speak on behalf of NOAA and the Department of Commerce.

See the "Critical habitats" section below for those critical habitats that lie wholly or partially within your project area under this office's jurisdiction. Please contact the designated FWS office if you have questions.

---

1. NOAA Fisheries, also known as the National Marine Fisheries Service (NMFS), is an office of the National Oceanic and Atmospheric Administration within the Department of Commerce.

Mammals

NAME	STATUS
Northern Long-eared Bat *Myotis septentrionalis* No critical habitat has been designated for this species. Species profile: https://ecos.fws.gov/ecp/species/9045	Threatened

Critical habitats

THERE ARE NO CRITICAL HABITATS WITHIN YOUR PROJECT AREA UNDER THIS OFFICE'S JURISDICTION.

August 28, 2018
11142

Mr. John Perry
Environmental Coordinator
Maine Department of Inland Fisheries
41 State House Station
Augusta, Maine 04333

Maine Department of Inland Fisheries & Wildlife Project Review
Pine State Family Mart - 1884 Forest Avenue, Portland
Record Owner: John Chau, Phuong Neang (JT)

Dear John:

Sebago Technics, Inc. respectfully requests a project review of a 1.61 ± acre wooded property located at 1884 Forest Avenue in the City of Portland. The site is identified by the assessor as 327-B-3 and is currently unimproved. The site design consists of a 7,800 square foot ± mixed-use retail building and a 5,000 square foot convenience store with four fueling islands. Sebago Technics is preparing a City of Portland Planning Board Site Plan Review Application. Review of the *Beginning with Habitat, Map 2 – High Value Plant & Animal Habitats* did not identify habitat area within the project bounds.

The property is surrounded by existing development including three residential apartment complexes (Riverton Park, Wellesley Estates, and Terrace Pond) and it is opposite from Tortilla Flats restaurant. A dance club/event center is located immediately to the east.

For your reference, I have enclosed a USGS Site Location Map and an aerial photograph for your reference and record. If you have any questions about the proposed development, please do not hesitate to contact me at snichols@sebagotechnics.com or on my direct line at (207) 200-2120. I look forward to hearing from you.

Sincerely,
SEBAGO TECHNICS, INC.

Stefanie Nichols
Permitting Specialist/Project Coordinator

enc.

20: Landscaping and Landscape Preservation (14-526 (b) 2a)

- Preservation of trees and preservation within required zoning setbacks (Technical Manual, Section 4)

  The design and allowed lot coverage by zone prevents preservation of trees. The proposed landscaping will restablish vegetation on the site in a manner that compliments the development and surrounding area.

- Protection measures of existing vegetation during construction

  All existing vegetation will be removed from the site during construction.

- Protection measures within Shoreland Zone, if applicable

  The proposed project is not located within the Shoreland Zone.

21: Site Landscaping (14-526(b)2b)

- Screening and buffering of service areas and between non-residential and residential uses

  The Pine State Family Mart will be buffered from residential uses by the placement of plantings along the south and southeast property lines. Areas that are not screened have been allocated as the snow storage area.

- Planting plans with plant schedule and sizes (Technical Manual, Section 4)

  Please see the Landscape Plan the plant schedule and sizes.

22: Parking Lot Landscaping (14-526(b) 2 b ii), if applicable

- Landscaped islands within parking areas (Technical Manual, Section 4)

  Landscaping hs been incorporated into the development, as required. Parking is screened from Forest Avenue by urban wall building placement required by the zoning. Plant materials have been selected for aesthetics and durability and are protected from snow plowing with curbing and boulder placement.

23: Street Trees (14-526(b) 2 B iii)

- Existing Heritage or Feature Trees on site and measures to preserve

  No existing Heritage or Feature Trees have been located on the site.

- Identify street trees on the plan meeting the site plan and Technical Manual standards (Section 4) or identify alternative measures, if applicable

  The project site requires a 10' minimum setback and is further constrained by existing overhead electrical lines. No street trees will be placed within the public right-of-way. The applicant proposes to plant five trees where appropriate within the property bounds adjacent to the right-of-way along Forest Avenue and two trees adjacent to the Riverton Drive right-of-way as shown on the enclosed Landscape Plan. Foundation plantings along the face of the retail building have been included in the landscape design where the installation of trees would cause a conflict with existing overhead electrical lines. Please see the Landscape Plan for proposed planting information.

24: Water Quality, Stormwater Management and Erosion Control (14-526(b) 3 a)

The proposed site development has been designed in accordance with the City and Maine DEP Chapter 500 Stormwater standards. Please refer to the revised Stormwater Management Plan, this section. See the site plans for erosion control features, details and the written ESC plan.

SEBAGO TECHNICS

CIVIL ENGINEERING • SURVEYING • LANDSCAPE ARCHITECTURE

Pine State Family Mart
1884 Forest Avenue
Portland ME, 04103

Prepared for

John Chau
75 Arcadia Street
Portland, ME 04103

April 2019

Table of Contents

Contents

I. Introduction 1
Basic Standard - Chapter 500, Section 4(B) 1
General Standard - Chapter 500, Section 4(C) 1
Flooding Standard - Chapter 500, Section 4(F) 2
Urban Impaired Stream Standard – Chapter 500, Section 4(E) 2
II. Existing Conditions 2
III. Proposed Conditions 3
IV. Methodology 3
V. Pre-Development Watershed Model 4
VI. Post-Development Watershed Model 4
VII. Water Quality 5
VIII. Water Quantity 5
IX. Conclusion 5

Appendices

Appendix A: Regulatory Standards Calculations
Appendix B: Subsurface Investigations/FIRM Map
Appendix C: Pre-Development Calculations
Appendix D: Post-Development Calculations
Appendix E: Inspection, Maintenance and Housekeeping Plan
Appendix F: Easements/Deed Restrictions
Appendix G: Stormwater Management Plans

STORMWATER MANAGEMENT PLAN
Pine State Family Mart
Portland, Maine

I. Introduction

This Stormwater Management Plan has been prepared to address the potential impacts associated with this project due to the proposed modification in stormwater runoff characteristics and land cover changes. The stormwater management controls that are outlined in this plan have been designed to suit the proposed development and to comply with applicable regulatory requirements.

Project Scope

The proposed development will consist of an 8-bay gas station and related convenience store with a 5,000 square-foot footprint, and a mixed-use retail building with a total footprint of 7,800 square-feet. Additionally, the site will include 48 parking spaces, 4 of which are handicap accessible. The project will result in the creation of 1.1 acres of impervious area and 1.6 acres of developed area.

Project Watershed

The proposed development is tributary to the Presumpscot River watershed, ultimately draining to the Atlantic Ocean.

Regulatory Requirements

Regulatory requirements for this project consist of the basic, general and flooding standards, each described individually below.

Basic Standard - Chapter 500, Section 4(B)

Since the project will disturb more than one (1) acre of land area, MDEP Basic Standards apply, requiring that grading or other construction activities on the site do not impede or otherwise alter drainage ways to have an unreasonable adverse impact. As such, an Erosion & Sedimentation Control Plan and an Inspection, Maintenance and Housekeeping Plan (Appendix E) will be implemented during construction and post-construction to stabilize the site. These construction requirements have been developed following Best Management Practice guidelines.

General Standard - Chapter 500, Section 4(C)

Since the project will create more than one (1) acre of impervious surface, MDEP General Standards apply, which require a project's stormwater management system to include treatment measures that will mitigate for the increased frequency and duration of channel erosive flows due to runoff from smaller storms, provide for effective treatment of pollutants in stormwater, and mitigate potential temperature impacts. The General Standards require treatment of no less than 95% of the site's created impervious area and no less than 80% of the site's created developed area (landscaped area and impervious area

combined). To mitigate the changes in hydrologic patterns due to the development of this project, a subsurface underdrained soil filter has been implemented into the stormwater management infrastructure.

Flooding Standard - Chapter 500, Section 4(F)

Since the planned project will not create more than three (3) acres of impervious surface, MDEP Flooding Standards are not required to be met. However, through the City of Portland delegated review there are flooding standards that need to be met. The Flooding Standard requires a project's stormwater management system detain, retain, or result in the infiltration of stormwater from 24-hour storms of the 2, 10, and 25-year frequencies such that the peak flows of stormwater from the project site do not exceed the peak flows of stormwater prior to undertaking the project.

Urban Impaired Stream Standard – Chapter 500, Section 4(E)

The proposed development is not tributary to an Urban Impaired Stream as defined by the Maine Department of Environmental Protection in Chapter 502. Therefore, the project will not be required to meet or exceed the requirements of the Urban Impaired Stream Standard as listed in Section 4(E) of Chapter 500.

II. Existing Conditions

The project site is located in the City of Portland's Riverton section and is bounded by Forest Avenue to the north, Riverton Drive to the west and residential developments to the south and east. The project frontage is on Forest Avenue (Route 302) and will be accessed by drives on Forest Avenue and Riverton Drive. The project site is approximately 1.61 acres in size. The site is partially wooded with slopes generally between 0-3%. There are no wetlands or other waterbodies within this property.

Soils

Soil characteristics were obtained from the USDA National Resources Conservation Service - Web Soil Survey. The Hydrologic Groups (HSG) of the soils is classified as follows:

Soil Map Symbol	Soil Name	Slope (%)	HSG
WmB	Windsor Loamy Sand	0-8	A

A copy of the hydrologic soil group designation is included in Appendix B.

Flood Zone

The proposed development area of the site is not located in an identified flood zone per the FEMA Flood Insurance Rate Map for the City of Portland, Community Panel 230051 0006 C. A flood insurance rate map is included in Appendix B.

III. Proposed Conditions

Project Scope

The proposed development will consist of an 8-bay gas station and related convenience store with a 5,000 square-foot footprint, and a mixed used retail building with a total footprint of 7,800 square-feet. Additionally, the site will include 48 parking spaces, 4 of which are handicap accessible. The project will result in the creation of 1.1 acres of impervious area and 1.6 acres of developed area.

Surface Cover

The project development will require removal of most of the vegetation on the site. The site will be revegetated in accordance with the City regulations. Neighboring residential uses are buffered and all landscaping plant locations, types and sizes are shown on the enclosed Landscape Plan.

Best Management Practices

The project will utilize a Subsurface Underdrained Soil Filter for stormwater treatment and detention.

IV. Methodology

In order to evaluate drainage characteristics as a result of the proposed development, a quantitative analysis was performed to determine peak runoff rates in the pre-development and post-development conditions. The evaluation was performed using the methodology outlined in the USDA Soil Conservation Service's "Urban Hydrology for Small Watersheds - Technical Release #55 (TR-55)". HydroCAD computer software was utilized to perform the calculations.

The peak runoff rates were calculated using a 24-hour duration storm event with a Type-III rainfall distribution. The rainfall amounts for Cumberland County (SE) were obtained from Appendix H of MDEP's Chapter 500: Stormwater Management (effective date August 2015). Rainfall values for Cumberland County SE are listed in the table below.

Storm Frequency Precipitation (in./24 hr) Cumberland County SE	
2-year	3.1
10-year	4.6
25-year	5.8

Runoff curve numbers were determined for each of the watersheds by measuring the area of each hydrologic soil group within each type of land cover. The type of land cover was determined based on survey data, field reconnaissance and aerial photography. Times of concentration were determined from site topographic maps in accordance with SCS procedures.

The hydrologic model incorporates the following design assumptions:

- The minimum time of concentration (Tc) is six minutes, based upon limitations of the TR-55 model.

V. Pre-Development Watershed Model

The pre-development watershed plan consists of two subcatchments labeled 1S and 2S in the HydroCAD model. Two locations were identified as Study Points (SP's) for comparing peak runoff rates, and are described below:

SP-1 is located in the south-westerly corner of the lot where runoff leaves the site via closed drainage system located in Riverton Drive. Watershed 1S contributes runoff to this study point with an overall runoff area of approximately 0.93 acres. SP-1 and the associated drainage area are tributary to the Presumpscot River Watershed.

SP-2 is located in the south-easterly corner of the lot where runoff leaves the site via overland flow to the adjacent residential property complex. Watershed 2S contributes runoff to this study point with an overall runoff area of approximately 0.07 acres. SP-2 and the associated drainage area are also tributary to Presumpscot River Watershed.

VI. Post-Development Watershed Model

The post-development watershed area consists of the same overall area as the pre-development plan.

Post-development subcatchments 10S and 11S represent the area tributary to SP-1. Subcatchment 20S represents the area tributary to SP-2. The majority of the proposed development area is included within 10S and 11s. Watersheds 10S and 11S include the buildings, access drives, parking areas, landscaped areas, and the subsurface underdrained soil filter (10P). The overall tributary area associated with SP-1 is 1.5 acres. Watershed 20S includes a small portion of proposed sidewalk, and landscaped areas. The overall tributary area associated with SP-2 is 0.14 acres.

The Best Management Practices have been designed and sized in accordance with DEP BMP standards contained within Chapter 500 and the BMP Manual. Sizing calculations can be found in Appendix A.

VII. Water Quality

A subsurface geotechnical investigation to determine the seasonal high-water table will be performed and test pits will be done in the proposed building areas and stormwater treatment filtration area. Upon completion, the geotechnical investigation report can be provided upon request.

The General Standards are met by routing stormwater runoff to a subsurface underdrained soil filter. BMP sizing and treatment calculations of this system are provided in Appendix A.

Through the use of the aforementioned BMP 99.69% of new impervious area and 95.70% of new developed area will be receiving treatment. This meets the requirements for the Maine DEP General Standards.

VIII. Water Quantity

The subcatchment areas and times of concentration of the post-development conditions vary from the pre-development conditions based on the proposed site development and grading. The following table summarizes the results of the hydrological analysis of the project during pre-development and post development conditions:

Stormwater Peak Runoff Summary Table			
Study Point	**Storm Event**	**Pre-Development (cfs)**	**Post-Development (cfs)**
SP-1	2-year	0.00	0.00
	10-year	0.00	0.01
	25-year	0.02	0.03
SP-2	2-year	0.00	0.00
	10-year	0.00	0.00
	25-year	0.01	0.00

Although a concerted effort has been made to maintain post-development peak rates at pre-development levels, the model indicates an insignificant increase (0.01 cfs) at SP-1 during the 10-year and 25-year storm events. As such, a waiver of the flooding standard is requested in accordance with Chapter 500, 4.F.3.a. The requested waiver applies to projects located in the watershed of a major river segment in which stormwater is conveyed to this resource via a piped system.

IX. Conclusion

Erosion and sedimentation controls, inspection and maintenance procedures and general housekeeping requirements have been outlined to prevent unreasonable impacts on the site and to the surrounding environment. By utilizing Best Management Practices (subsurface

underdrained soil filter), stormwater quality treatment has been provided for at least 95% of the total site impervious area and at least 80% of the total site developed area. Based on modeling data, an insignificant increase (0.01 cfs) at SP-1 during the 10-year and 25-year storm events. As such, a waiver of the flooding standard is requested in accordance with Chapter 500, 4.F.3.a. The requested waiver applies to projects located in the watershed of a major river segment in which stormwater is conveyed to this resource via a piped system. It is anticipated that stormwater runoff from the proposed site development will not cause a significant adverse effect to off-site receiving channels or downstream properties.

Prepared by:

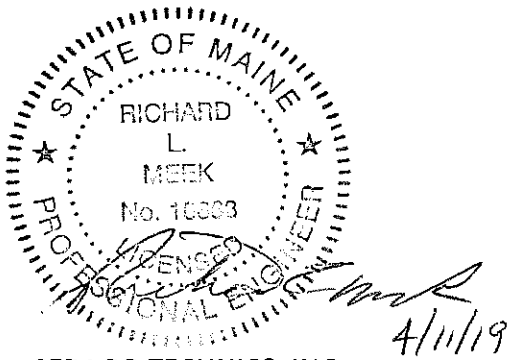

SEBAGO TECHNICS, INC.

Richard L. Meek, P.E

Senior Project Engineer

SAH

Appendix A

Regulatory Standards Calculations

Table 1: MDEP GENERAL STANDARD CALCULATIONS

Job # 11142 Pine State Family Mart

AREA ID	WATERSHED SIZE (S.F.)	EXISTING ONSITE IMPERVIOUS AREA TO REMAIN (S.F.)	NEW ONSITE IMPERVIOUS AREA (S.F.)	EXISTING ONSITE LANDSCAPED AREA TO REMAIN (S.F.)	NEW ONSITE LANDSCAPED AREA (S.F.)	NET NEW DEVELOPED AREA (S.F.)	NET EXISTING DEVELOPED AREAS (S.F.)	TREATMENT PROVIDED?	IMPERVIOUS AREA TREATED (S.F.)	LANDSCAPED AREA TREATED* (S.F.)	DEVELOPED AREA TREATED (S.F.)	TREATMENT BMP
10 &11	66,349	147	48,403	2,101	15,698	64,101		YES	48,550	17,799	66,349	SSSF1
20	7,500	296	300	475	4,930	5,230		NO	0	0	0	
TOTAL (S.F.)	**73,849**	**443**	**48,703**	**2,576**	**20,628**	**69,331**	**0**		**48,550**	**17,799**	**66,349**	

TOTAL NEW IMPERVIOUS AREA (S.F.)	**48,703**	**TOTAL DEVELOPED AREA (S.F.)**	**69,331**
TOTAL IMPERVIOUS AREA RECEIVING TREATMENT (S.F.)	**48,550**	**TOTAL DEV. AREA RECEIVING TREATMENT (S.F.)**	**66,349**
% OF IMPERVIOUS AREA RECEIVING TREATMENT	**99.69%**	**% OF DEV. AREA RECEIVING TREATMENT**	**95.70%**

SEBAGO TECHNICS, INC.
75 John Roberts Road Suite 4A
South Portland, Maine 04106
Tel. (207) 200-2100

JOB	11142				
SHEET NO.	1	OF	1		
CALCULATED BY	SAH	DATE	9/4/2018		
FILE NAME	11142WQC.xls	PRNT DATE	4/8/2019		

UNDERDRAINED SUBSURFACE SAND FILTER

Task: Calculate water quality volume per MDEP chapter 500 regulations

References

1. Maine DEP Chapter 500, Section 4.C.(3)(b)
   "must detain a runoff volume equal to 1.0 inch times the subcatchment's impervious area plus 0.4 inch times the subcatchment's landscaped area"
2. Maine DEP Best Management Practices Stormwater Manual, Section 7.3.2
   a. "detain runoff volume equal to 1.0 inch times the subcatchment's impervious area plus 0.4 inch times the subcatchment's landscaped area"
   b. "surface area of the sand filter bed and chamber system must be at least equal to 5% of the impervious area draining to it and 2% of the landscaped area."
   c. "treatment flow rate for the Stormtech Isolator Row is the projected one year peak flow rate for the drainage area feeding the Isolator Row"

Flow rates:

SC-310	0.10	cfs/chamber
SC-740	0.20	cfs/chamber
DC-780	0.20	cfs/chamber
MC-3500	0.30	cfs/chamber

Tributary to Subsurface Sand Filter: SSSF1

Landscaped Area	17,799.00	SF
Impervious Area	48,550.00	SF

Minimum Surface Area for sand filter and chamber system

Required (2% X Landscaped + 5%" X Impervious)

Total Landscaped Area	17,799.00	SF	Area	356	SF
Total Impervious Area	48,550.00	SF	Area	2428	SF
Required Minimum Surface Area				2783	SF
Provided Surface Area				5768	SF

Treatment Volume

Required (0.4" X Landscaped + 1.0" X Impervious)

Landscaped Area	17,799.00	SF	Volume	593	
Impervious Area	48,550.00	SF	Volume	4046	
Treatment Volume Required				4639	CF 0.106 AF
Provided Treatment Volume				6605	CF At Elev = 75.12

Sediment Pre-Treatment

Per Reference 2.c above

One year flow rate out put from Hydrocad:		1.60	cfs
ISO Row sizing for:	**DC-780**	**0.2**	cfs
Total number of Isolator Row Chambers required:		8	Provided one row of 20

Appendix B

Subsurface Investigations



Map Scale: 1:1,170 if printed on A landscape (11" x 8.5") sheet.

N

Meters
0 15 30 60 90

Feet
0 50 100 200 300

Map projection: Web Mercator Corner coordinates: WGS84 Edge tics: UTM Zone 19N WGS84

MAP LEGEND

Area of Interest (AOI)

Area of Interest (AOI)

Soils

Soil Rating Polygons

A
A/D
B
B/D
C
C/D
D
Not rated or not available

Soil Rating Lines

A
A/D
B
B/D
C
C/D
D
Not rated or not available

Soil Rating Points

A
A/D
B
B/D
C
C/D
D
Not rated or not available

Water Features

Streams and Canals

Transportation

Rails
Interstate Highways
US Routes
Major Roads
Local Roads

Background

Aerial Photography

MAP INFORMATION

The soil surveys that comprise your AOI were mapped at 1:24,000.

Warning: Soil Map may not be valid at this scale.

Enlargement of maps beyond the scale of mapping can cause misunderstanding of the detail of mapping and accuracy of soil line placement. The maps do not show the small areas of contrasting soils that could have been shown at a more detailed scale.

Please rely on the bar scale on each map sheet for map measurements.

Source of Map: Natural Resources Conservation Service
Web Soil Survey URL:
Coordinate System: Web Mercator (EPSG:3857)

Maps from the Web Soil Survey are based on the Web Mercator projection, which preserves direction and shape but distorts distance and area. A projection that preserves area, such as the Albers equal-area conic projection, should be used if more accurate calculations of distance or area are required.

This product is generated from the USDA-NRCS certified data as of the version date(s) listed below.

Soil Survey Area: Cumberland County and Part of Oxford County, Maine
Survey Area Data: Version 13, Sep 11, 2017

Soil map units are labeled (as space allows) for map scales 1:50,000 or larger.

Date(s) aerial images were photographed: Data not available.

The orthophoto or other base map on which the soil lines were compiled and digitized probably differs from the background imagery displayed on these maps. As a result, some minor shifting of map unit boundaries may be evident.

Hydrologic Soil Group

Map unit symbol	Map unit name	Rating	Acres in AOI	Percent of AOI
WmB	Windsor loamy sand, 0 to 8 percent slopes	A	4.0	100.0%
Totals for Area of Interest			**4.0**	**100.0%**

Description

Hydrologic soil groups are based on estimates of runoff potential. Soils are assigned to one of four groups according to the rate of water infiltration when the soils are not protected by vegetation, are thoroughly wet, and receive precipitation from long-duration storms.

The soils in the United States are assigned to four groups (A, B, C, and D) and three dual classes (A/D, B/D, and C/D). The groups are defined as follows:

Group A. Soils having a high infiltration rate (low runoff potential) when thoroughly wet. These consist mainly of deep, well drained to excessively drained sands or gravelly sands. These soils have a high rate of water transmission.

Group B. Soils having a moderate infiltration rate when thoroughly wet. These consist chiefly of moderately deep or deep, moderately well drained or well drained soils that have moderately fine texture to moderately coarse texture. These soils have a moderate rate of water transmission.

Group C. Soils having a slow infiltration rate when thoroughly wet. These consist chiefly of soils having a layer that impedes the downward movement of water or soils of moderately fine texture or fine texture. These soils have a slow rate of water transmission.

Group D. Soils having a very slow infiltration rate (high runoff potential) when thoroughly wet. These consist chiefly of clays that have a high shrink-swell potential, soils that have a high water table, soils that have a claypan or clay layer at or near the surface, and soils that are shallow over nearly impervious material. These soils have a very slow rate of water transmission.

If a soil is assigned to a dual hydrologic group (A/D, B/D, or C/D), the first letter is for drained areas and the second is for undrained areas. Only the soils that in their natural condition are in group D are assigned to dual classes.

Rating Options

Aggregation Method: Dominant Condition

Component Percent Cutoff: None Specified

Tie-break Rule: Higher

Appendix C

Pre-Development Calculations

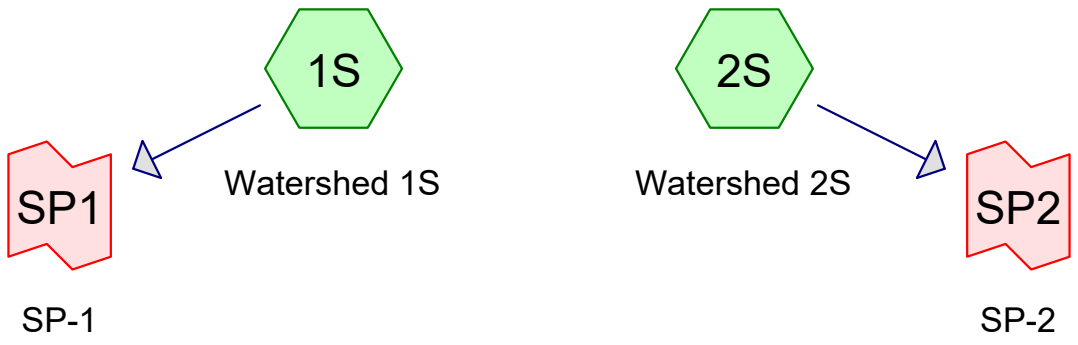

Subcat Reach Pond Link

Routing Diagram for Pre-Development
Prepared by Sebago Technics, Inc, Printed 4/8/2019
HydroCAD® 10.00-24 s/n 01856 © 2018 HydroCAD Software Solutions LLC

Area Listing (all nodes)

Area (sq-ft)	CN	Description (subcatchment-numbers)
20,032	39	>75% Grass cover, Good, HSG A (1S, 2S)
443	98	Impervious (1S, 2S)
49,918	30	Woods, Good, HSG A (1S, 2S)

Summary for Subcatchment 1S: Watershed 1S

Runoff = 0.02 cfs @ 15.04 hrs, Volume= 462 cf, Depth= 0.14"

Runoff by SCS TR-20 method, UH=SCS, Weighted-CN, Time Span= 0.00-48.00 hrs, dt= 0.01 hrs
Type III 24-hr 25-year Rainfall=5.80"

	Area (sf)	CN	Description
	29,205	30	Woods, Good, HSG A
	11,058	39	>75% Grass cover, Good, HSG A
*	147	98	Impervious
	40,410	33	Weighted Average
	40,263		99.64% Pervious Area
	147		0.36% Impervious Area

Tc (min)	Length (feet)	Slope (ft/ft)	Velocity (ft/sec)	Capacity (cfs)	Description
16.4	75	0.0230	0.08		**Sheet Flow, A to B** Woods: Light underbrush n= 0.400 P2= 3.10"
7.4	222	0.0100	0.50		**Shallow Concentrated Flow, B to C** Woodland Kv= 5.0 fps
0.5	37	0.0540	1.16		**Shallow Concentrated Flow, C to D** Woodland Kv= 5.0 fps
24.3	334	Total			

Summary for Subcatchment 2S: Watershed 2S

Runoff = 0.01 cfs @ 15.15 hrs, Volume= 343 cf, Depth= 0.14"

Runoff by SCS TR-20 method, UH=SCS, Weighted-CN, Time Span= 0.00-48.00 hrs, dt= 0.01 hrs
Type III 24-hr 25-year Rainfall=5.80"

	Area (sf)	CN	Description
	20,713	30	Woods, Good, HSG A
	8,974	39	>75% Grass cover, Good, HSG A
*	296	98	Impervious
	29,983	33	Weighted Average
	29,687		99.01% Pervious Area
	296		0.99% Impervious Area

Tc (min)	Length (feet)	Slope (ft/ft)	Velocity (ft/sec)	Capacity (cfs)	Description
15.4	75	0.0270	0.08		**Sheet Flow, A to B** Woods: Light underbrush n= 0.400 P2= 3.10"
18.6	394	0.0050	0.35		**Shallow Concentrated Flow, B to C** Woodland Kv= 5.0 fps
34.0	469	Total			

Summary for Link SP1: SP-1

Inflow Area = 40,410 sf, 0.36% Impervious, Inflow Depth = 0.14" for 25-year event
Inflow = 0.02 cfs @ 15.04 hrs, Volume= 462 cf
Primary = 0.02 cfs @ 15.04 hrs, Volume= 462 cf, Atten= 0%, Lag= 0.0 min

Primary outflow = Inflow, Time Span= 0.00-48.00 hrs, dt= 0.01 hrs

Summary for Link SP2: SP-2

Inflow Area = 29,983 sf, 0.99% Impervious, Inflow Depth = 0.14" for 25-year event
Inflow = 0.01 cfs @ 15.15 hrs, Volume= 343 cf
Primary = 0.01 cfs @ 15.15 hrs, Volume= 343 cf, Atten= 0%, Lag= 0.0 min

Primary outflow = Inflow, Time Span= 0.00-48.00 hrs, dt= 0.01 hrs

Time span=0.00-48.00 hrs, dt=0.01 hrs, 4801 points x 3
Runoff by SCS TR-20 method, UH=SCS, Weighted-CN
Reach routing by Dyn-Stor-Ind method - Pond routing by Dyn-Stor-Ind method

Subcatchment1S: Watershed 1S Runoff Area=40,410 sf 0.36% Impervious Runoff Depth=0.00"
Flow Length=334' Tc=24.3 min CN=33 Runoff=0.00 cfs 0 cf

Subcatchment2S: Watershed 2S Runoff Area=29,983 sf 0.99% Impervious Runoff Depth=0.00"
Flow Length=469' Tc=34.0 min CN=33 Runoff=0.00 cfs 0 cf

Link SP1: SP-1 Inflow=0.00 cfs 0 cf
Primary=0.00 cfs 0 cf

Link SP2: SP-2 Inflow=0.00 cfs 0 cf
Primary=0.00 cfs 0 cf

Total Runoff Area = 70,393 sf Runoff Volume = 0 cf Average Runoff Depth = 0.00"
99.37% Pervious = 69,950 sf 0.63% Impervious = 443 sf

Time span=0.00-48.00 hrs, dt=0.01 hrs, 4801 points x 3
Runoff by SCS TR-20 method, UH=SCS, Weighted-CN
Reach routing by Dyn-Stor-Ind method - Pond routing by Dyn-Stor-Ind method

Subcatchment1S: Watershed 1S Runoff Area=40,410 sf 0.36% Impervious Runoff Depth=0.01"
Flow Length=334' Tc=24.3 min CN=33 Runoff=0.00 cfs 47 cf

Subcatchment2S: Watershed 2S Runoff Area=29,983 sf 0.99% Impervious Runoff Depth=0.01"
Flow Length=469' Tc=34.0 min CN=33 Runoff=0.00 cfs 35 cf

Link SP1: SP-1 Inflow=0.00 cfs 47 cf
Primary=0.00 cfs 47 cf

Link SP2: SP-2 Inflow=0.00 cfs 35 cf
Primary=0.00 cfs 35 cf

Total Runoff Area = 70,393 sf Runoff Volume = 82 cf Average Runoff Depth = 0.01"
99.37% Pervious = 69,950 sf 0.63% Impervious = 443 sf

Time span=0.00-48.00 hrs, dt=0.01 hrs, 4801 points x 3
Runoff by SCS TR-20 method, UH=SCS, Weighted-CN
Reach routing by Dyn-Stor-Ind method - Pond routing by Dyn-Stor-Ind method

Subcatchment1S: Watershed 1S Runoff Area=40,410 sf 0.36% Impervious Runoff Depth=0.14"
Flow Length=334' Tc=24.3 min CN=33 Runoff=0.02 cfs 462 cf

Subcatchment2S: Watershed 2S Runoff Area=29,983 sf 0.99% Impervious Runoff Depth=0.14"
Flow Length=469' Tc=34.0 min CN=33 Runoff=0.01 cfs 343 cf

Link SP1: SP-1 Inflow=0.02 cfs 462 cf
Primary=0.02 cfs 462 cf

Link SP2: SP-2 Inflow=0.01 cfs 343 cf
Primary=0.01 cfs 343 cf

Total Runoff Area = 70,393 sf Runoff Volume = 805 cf Average Runoff Depth = 0.14"
99.37% Pervious = 69,950 sf 0.63% Impervious = 443 sf

Appendix D

Post-Development Calculations

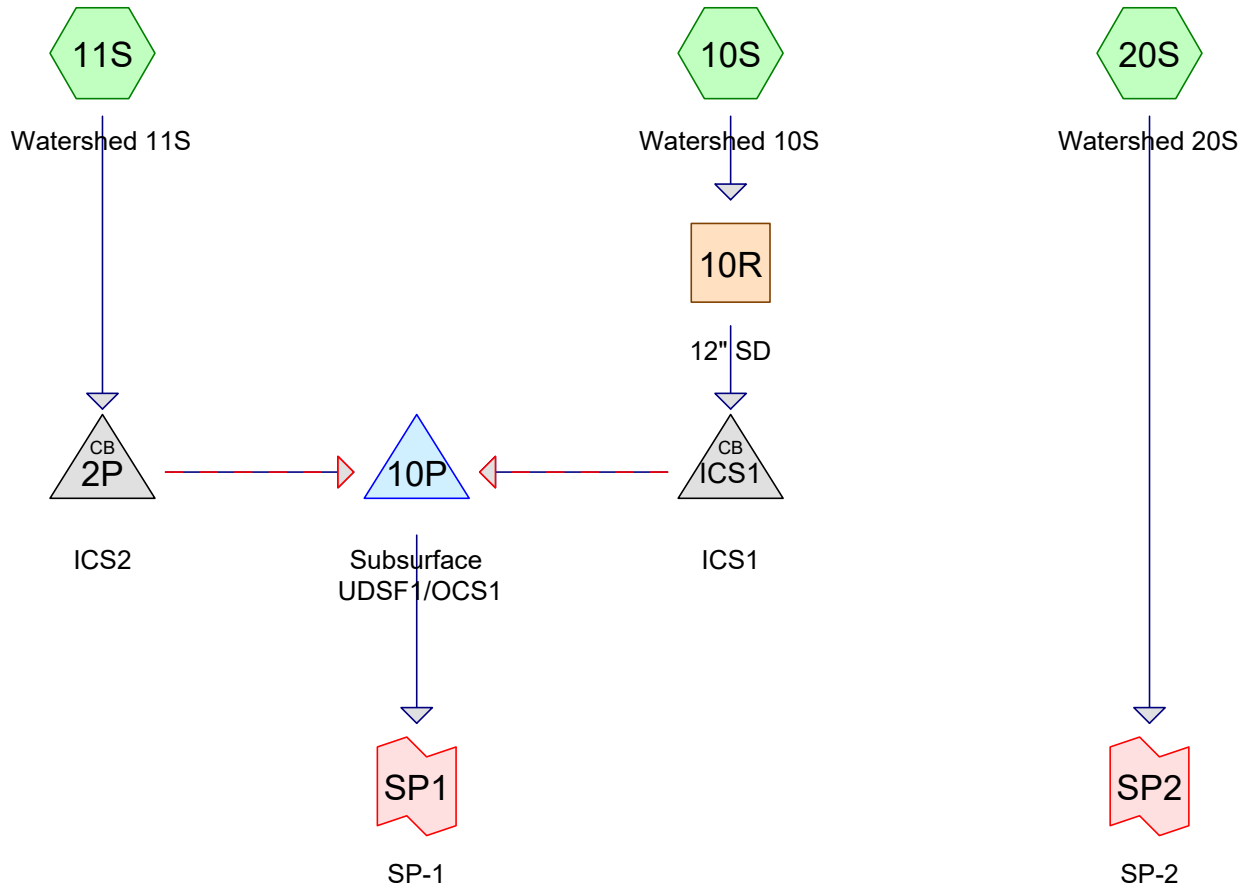

Subcat Reach Pond Link

Routing Diagram for Post-Development
Prepared by Sebago Technics, Inc, Printed 4/8/2019
HydroCAD® 10.00-24 s/n 01856 © 2018 HydroCAD Software Solutions LLC

Area Listing (all nodes)

Area (sq-ft)	CN	Description (subcatchment-numbers)
20,628	39	>75% Grass cover, Good, HSG A (10S, 11S, 20S)
49,146	98	Impervious (10S, 11S, 20S)
2,576	30	Woods, Good, HSG A (10S, 11S, 20S)

Summary for Subcatchment 10S: Watershed 10S

Runoff = 3.3 cfs @ 12.15 hrs, Volume= 12,251 cf, Depth= 3.91"

Runoff by SCS TR-20 method, UH=SCS, Weighted-CN, Time Span= 0.00-48.00 hrs, dt= 0.01 hrs
Type III 24-hr 25-year Rainfall=5.80"

	Area (sf)	CN	Description
	708	30	Woods, Good, HSG A
	8,667	39	>75% Grass cover, Good, HSG A
*	28,262	98	Impervious
	37,637	83	Weighted Average
	9,375		24.91% Pervious Area
	28,262		75.09% Impervious Area

Tc (min)	Length (feet)	Slope (ft/ft)	Velocity (ft/sec)	Capacity (cfs)	Description
9.4	55	0.0180	0.10		**Sheet Flow, A to B**
					Grass: Dense n= 0.240 P2= 3.10"
1.5	296	0.0050	3.21	2.52	**Pipe Channel, B to C**
					12.0" Round Area= 0.8 sf Perim= 3.1' r= 0.25'
					n= 0.013 Corrugated PE, smooth interior
10.9	351	Total			

Summary for Subcatchment 11S: Watershed 11S

Runoff = 2.8 cfs @ 12.09 hrs, Volume= 8,617 cf, Depth= 3.60"

Runoff by SCS TR-20 method, UH=SCS, Weighted-CN, Time Span= 0.00-48.00 hrs, dt= 0.01 hrs
Type III 24-hr 25-year Rainfall=5.80"

	Area (sf)	CN	Description
	1,393	30	Woods, Good, HSG A
	7,031	39	>75% Grass cover, Good, HSG A
*	20,288	98	Impervious
	28,712	80	Weighted Average
	8,424		29.34% Pervious Area
	20,288		70.66% Impervious Area

Tc (min)	Length (feet)	Slope (ft/ft)	Velocity (ft/sec)	Capacity (cfs)	Description
1.7	125	0.0136	1.21		**Sheet Flow, A to B**
					Smooth surfaces n= 0.011 P2= 3.10"
1.1	200	0.0240	3.14		**Shallow Concentrated Flow, B to C**
					Paved Kv= 20.3 fps
3.2					**Direct Entry, Min Tc=6.0 mins**
6.0	325	Total			

Summary for Subcatchment 20S: Watershed 20S

Runoff = 0.0 cfs @ 12.27 hrs, Volume= 331 cf, Depth= 0.66"

Runoff by SCS TR-20 method, UH=SCS, Weighted-CN, Time Span= 0.00-48.00 hrs, dt= 0.01 hrs
Type III 24-hr 25-year Rainfall=5.80"

	Area (sf)	CN	Description
	475	30	Woods, Good, HSG A
	4,930	39	>75% Grass cover, Good, HSG A
*	596	98	Impervious
	6,001	44	Weighted Average
	5,405		90.07% Pervious Area
	596		9.93% Impervious Area

Tc (min)	Length (feet)	Slope (ft/ft)	Velocity (ft/sec)	Capacity (cfs)	Description
11.1	75	0.0220	0.11		**Sheet Flow, A to B** Grass: Dense n= 0.240 P2= 3.10"

Summary for Reach 10R: 12" SD

Inflow Area = 37,637 sf, 75.09% Impervious, Inflow Depth = 3.91" for 25-year event
Inflow = 3.3 cfs @ 12.15 hrs, Volume= 12,251 cf
Outflow = 3.3 cfs @ 12.15 hrs, Volume= 12,251 cf, Atten= 0%, Lag= 0.1 min

Routing by Dyn-Stor-Ind method, Time Span= 0.00-48.00 hrs, dt= 0.01 hrs / 4
Max. Velocity= 8.41 fps, Min. Travel Time= 0.2 min
Avg. Velocity = 3.03 fps, Avg. Travel Time= 0.5 min

Peak Storage= 38 cf @ 12.15 hrs
Average Depth at Peak Storage= 0.50'
Bank-Full Depth= 1.00' Flow Area= 0.8 sf, Capacity= 6.6 cfs

12.0" Round Pipe
n= 0.005
Length= 95.0' Slope= 0.0051 '/'
Inlet Invert= 76.66', Outlet Invert= 76.18'

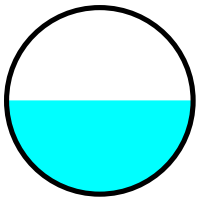

Summary for Pond 2P: ICS2

Inflow Area = 28,712 sf, 70.66% Impervious, Inflow Depth = 3.60" for 25-year event
Inflow = 2.8 cfs @ 12.09 hrs, Volume= 8,617 cf
Outflow = 2.8 cfs @ 12.09 hrs, Volume= 8,617 cf, Atten= 0%, Lag= 0.0 min
Primary = 2.7 cfs @ 12.08 hrs, Volume= 6,192 cf
Secondary = 0.3 cfs @ 12.42 hrs, Volume= 2,425 cf

Routing by Dyn-Stor-Ind method, Time Span= 0.00-48.00 hrs, dt= 0.01 hrs / 4
Peak Elev= 77.07' @ 15.42 hrs
Flood Elev= 83.50'

Device	Routing	Invert	Outlet Devices
#1	Primary	73.68'	**12.0" Round Culvert** L= 5.0' CPP, projecting, no headwall, Ke= 0.900 Inlet / Outlet Invert= 73.68' / 73.68' S= 0.0000 '/' Cc= 0.900 n= 0.013 Corrugated PE, smooth interior, Flow Area= 0.79 sf
#2	Secondary	75.12'	**12.0" Round Culvert** L= 15.0' CPP, square edge headwall, Ke= 0.500 Inlet / Outlet Invert= 75.12' / 74.82' S= 0.0200 '/' Cc= 0.900 n= 0.013 Corrugated PE, smooth interior, Flow Area= 0.79 sf

Primary OutFlow Max=2.7 cfs @ 12.08 hrs HW=75.26' TW=74.46' (Dynamic Tailwater)
↑—**1=Culvert** (Inlet Controls 2.7 cfs @ 3.39 fps)

Secondary OutFlow Max=0.3 cfs @ 12.42 hrs HW=75.70' TW=75.67' (Dynamic Tailwater)
↑—**2=Culvert** (Outlet Controls 0.3 cfs @ 0.99 fps)

Summary for Pond 10P: Subsurface UDSF1/OCS1

Inflow Area = 66,349 sf, 73.17% Impervious, Inflow Depth = 3.77" for 25-year event
Inflow = 5.8 cfs @ 12.12 hrs, Volume= 20,868 cf
Outflow = 0.3 cfs @ 15.42 hrs, Volume= 13,176 cf, Atten= 95%, Lag= 198.2 min
Primary = 0.3 cfs @ 15.42 hrs, Volume= 13,176 cf

Routing by Dyn-Stor-Ind method, Time Span= 0.00-48.00 hrs, dt= 0.01 hrs / 4
Peak Elev= 77.07' @ 15.42 hrs Surf.Area= 5,768 sf Storage= 14,001 cf
Flood Elev= 78.24' Surf.Area= 5,768 sf Storage= 14,244 cf

Plug-Flow detention time= (not calculated: outflow precedes inflow)
Center-of-Mass det. time= 561.8 min (1,375.6 - 813.7)

Volume	Invert	Avail.Storage	Storage Description
#1A	72.93'	6,846 cf	**39.50'W x 146.02'L x 4.25'H Field A** 24,513 cf Overall - 7,398 cf Embedded = 17,114 cf x 40.0% Voids
#2A	73.68'	7,398 cf	**ADS_StormTech DC-780 +Cap** x 160 Inside #1 Effective Size= 45.4"W x 30.0"H => 6.49 sf x 7.12'L = 46.2 cf Overall Size= 51.0"W x 30.0"H x 7.56'L with 0.44' Overlap 160 Chambers in 8 Rows
		14,244 cf	Total Available Storage

Storage Group A created with Chamber Wizard

Device	Routing	Invert	Outlet Devices
#1	Primary	70.00'	**12.0" Round Culvert** L= 61.0' CPP, square edge headwall, Ke= 0.500 Inlet / Outlet Invert= 70.00' / 69.20' S= 0.0131 '/' Cc= 0.900 n= 0.013 Corrugated PE, smooth interior, Flow Area= 0.79 sf
#2	Device 1	70.10'	**6.0" Round Culvert** L= 15.0' CPP, square edge headwall, Ke= 0.500 Inlet / Outlet Invert= 70.10' / 70.10' S= 0.0000 '/' Cc= 0.900 n= 0.013 Corrugated PE, smooth interior, Flow Area= 0.20 sf
#3	Device 2	70.10'	**0.8" Vert. Orifice 1** C= 0.600
#4	Device 1	75.12'	**1.0" Vert. Orifice 2** C= 0.600
#5	Device 1	76.16'	**2.0" Vert. Orifice 3 X 2.00** C= 0.600
#6	Device 1	77.18'	**6.0' long Sharp-Crested Vee/Trap Weir** Cv= 2.62 (C= 3.28)

Primary OutFlow Max=0.3 cfs @ 15.42 hrs HW=77.07' TW=0.00' (Dynamic Tailwater)
- **1=Culvert** (Passes 0.3 cfs of 8.9 cfs potential flow)
  - **2=Culvert** (Passes 0.0 cfs of 2.4 cfs potential flow)
    - **3=Orifice 1** (Orifice Controls 0.0 cfs @ 12.69 fps)
  - **4=Orifice 2** (Orifice Controls 0.0 cfs @ 6.66 fps)
  - **5=Orifice 3** (Orifice Controls 0.2 cfs @ 4.39 fps)
  - **6=Sharp-Crested Vee/Trap Weir** (Controls 0.0 cfs)

Summary for Pond ICS1: ICS1

Inflow Area =	37,637 sf,	75.09% Impervious,	Inflow Depth =	3.91" for 25-year event
Inflow =	3.3 cfs @	12.15 hrs, Volume=	12,251 cf	
Outflow =	3.3 cfs @	12.15 hrs, Volume=	12,251 cf,	Atten= 0%, Lag= 0.0 min
Primary =	2.7 cfs @	12.11 hrs, Volume=	8,257 cf	
Secondary =	0.8 cfs @	12.18 hrs, Volume=	3,995 cf	

Routing by Dyn-Stor-Ind method, Time Span= 0.00-48.00 hrs, dt= 0.01 hrs / 4
Peak Elev= 77.08' @ 15.42 hrs
Flood Elev= 83.50'

Device	Routing	Invert	Outlet Devices
#1	Primary	73.68'	**12.0" Round Culvert** L= 5.0' CPP, projecting, no headwall, Ke= 0.900 Inlet / Outlet Invert= 73.68' / 73.68' S= 0.0000 '/' Cc= 0.900 n= 0.013 Corrugated PE, smooth interior, Flow Area= 0.79 sf
#2	Secondary	75.12'	**12.0" Round Culvert** L= 15.0' CPP, square edge headwall, Ke= 0.500 Inlet / Outlet Invert= 75.12' / 74.82' S= 0.0200 '/' Cc= 0.900 n= 0.013 Corrugated PE, smooth interior, Flow Area= 0.79 sf

Primary OutFlow Max=2.7 cfs @ 12.11 hrs HW=75.44' TW=74.62' (Dynamic Tailwater)
└**1=Culvert** (Inlet Controls 2.7 cfs @ 3.44 fps)

Secondary OutFlow Max=0.8 cfs @ 12.18 hrs HW=75.58' TW=74.94' (Dynamic Tailwater)
└**2=Culvert** (Inlet Controls 0.8 cfs @ 2.30 fps)

Summary for Link SP1: SP-1

Inflow Area = 66,349 sf, 73.17% Impervious, Inflow Depth > 2.38" for 25-year event
Inflow = 0.3 cfs @ 15.42 hrs, Volume= 13,176 cf
Primary = 0.3 cfs @ 15.42 hrs, Volume= 13,176 cf, Atten= 0%, Lag= 0.0 min

Primary outflow = Inflow, Time Span= 0.00-48.00 hrs, dt= 0.01 hrs

Summary for Link SP2: SP-2

Inflow Area = 6,001 sf, 9.93% Impervious, Inflow Depth = 0.66" for 25-year event
Inflow = 0.0 cfs @ 12.27 hrs, Volume= 331 cf
Primary = 0.0 cfs @ 12.27 hrs, Volume= 331 cf, Atten= 0%, Lag= 0.0 min

Primary outflow = Inflow, Time Span= 0.00-48.00 hrs, dt= 0.01 hrs

Time span=0.00-48.00 hrs, dt=0.01 hrs, 4801 points x 4
Runoff by SCS TR-20 method, UH=SCS, Weighted-CN
Reach routing by Dyn-Stor-Ind method - Pond routing by Dyn-Stor-Ind method

Subcatchment 10S: Watershed 10S Runoff Area=37,637 sf 75.09% Impervious Runoff Depth=1.53"
Flow Length=351' Tc=10.9 min CN=83 Runoff=1.3 cfs 4,791 cf

Subcatchment 11S: Watershed 11S Runoff Area=28,712 sf 70.66% Impervious Runoff Depth=1.33"
Flow Length=325' Tc=6.0 min CN=80 Runoff=1.0 cfs 3,171 cf

Subcatchment 20S: Watershed 20S Runoff Area=6,001 sf 9.93% Impervious Runoff Depth=0.02"
Flow Length=75' Slope=0.0220 '/' Tc=11.1 min CN=44 Runoff=0.0 cfs 12 cf

Reach 10R: 12" SD Avg. Flow Depth=0.30' Max Vel=6.53 fps Inflow=1.3 cfs 4,791 cf
12.0" Round Pipe n=0.005 L=95.0' S=0.0051 '/' Capacity=6.6 cfs Outflow=1.3 cfs 4,791 cf

Pond 2P: ICS2 Peak Elev=74.62' Inflow=1.0 cfs 3,171 cf
Primary=1.0 cfs 3,171 cf Secondary=0.0 cfs 0 cf Outflow=1.0 cfs 3,171 cf

Pond 10P: Subsurface UDSF1/OCS1 Peak Elev=74.62' Storage=6,194 cf Inflow=2.2 cfs 7,962 cf
Outflow=0.0 cfs 4,719 cf

Pond ICS1: ICS1 Peak Elev=74.62' Inflow=1.3 cfs 4,791 cf
Primary=1.3 cfs 4,791 cf Secondary=0.0 cfs 0 cf Outflow=1.3 cfs 4,791 cf

Link SP1: SP-1 Inflow=0.0 cfs 4,719 cf
Primary=0.0 cfs 4,719 cf

Link SP2: SP-2 Inflow=0.0 cfs 12 cf
Primary=0.0 cfs 12 cf

Total Runoff Area = 72,350 sf Runoff Volume = 7,974 cf Average Runoff Depth = 1.32"
32.07% Pervious = 23,204 sf 67.93% Impervious = 49,146 sf

Time span=0.00-48.00 hrs, dt=0.01 hrs, 4801 points x 4
Runoff by SCS TR-20 method, UH=SCS, Weighted-CN
Reach routing by Dyn-Stor-Ind method - Pond routing by Dyn-Stor-Ind method

Subcatchment10S: Watershed 10S Runoff Area=37,637 sf 75.09% Impervious Runoff Depth=2.81"
Flow Length=351' Tc=10.9 min CN=83 Runoff=2.4 cfs 8,828 cf

Subcatchment11S: Watershed 11S Runoff Area=28,712 sf 70.66% Impervious Runoff Depth=2.55"
Flow Length=325' Tc=6.0 min CN=80 Runoff=2.0 cfs 6,094 cf

Subcatchment20S: Watershed 20S Runoff Area=6,001 sf 9.93% Impervious Runoff Depth=0.29"
Flow Length=75' Slope=0.0220 '/' Tc=11.1 min CN=44 Runoff=0.0 cfs 143 cf

Reach 10R: 12" SD Avg. Flow Depth=0.42' Max Vel=7.74 fps Inflow=2.4 cfs 8,828 cf
12.0" Round Pipe n=0.005 L=95.0' S=0.0051 '/' Capacity=6.6 cfs Outflow=2.4 cfs 8,828 cf

Pond 2P: ICS2 Peak Elev=76.16' Inflow=2.0 cfs 6,094 cf
Primary=2.0 cfs 5,165 cf Secondary=0.0 cfs 929 cf Outflow=2.0 cfs 6,094 cf

Pond 10P: Subsurface UDSF1/OCS1 Peak Elev=76.16' Storage=11,884 cf Inflow=4.1 cfs 14,922 cf
Outflow=0.1 cfs 7,353 cf

Pond ICS1: ICS1 Peak Elev=76.16' Inflow=2.4 cfs 8,828 cf
Primary=2.4 cfs 7,519 cf Secondary=0.1 cfs 1,309 cf Outflow=2.4 cfs 8,828 cf

Link SP1: SP-1 Inflow=0.1 cfs 7,353 cf
Primary=0.1 cfs 7,353 cf

Link SP2: SP-2 Inflow=0.0 cfs 143 cf
Primary=0.0 cfs 143 cf

Total Runoff Area = 72,350 sf Runoff Volume = 15,065 cf Average Runoff Depth = 2.50"
32.07% Pervious = 23,204 sf 67.93% Impervious = 49,146 sf

Time span=0.00-48.00 hrs, dt=0.01 hrs, 4801 points x 4
Runoff by SCS TR-20 method, UH=SCS, Weighted-CN
Reach routing by Dyn-Stor-Ind method - Pond routing by Dyn-Stor-Ind method

Subcatchment10S: Watershed 10S Runoff Area=37,637 sf 75.09% Impervious Runoff Depth=3.91"
Flow Length=351' Tc=10.9 min CN=83 Runoff=3.3 cfs 12,251 cf

Subcatchment11S: Watershed 11S Runoff Area=28,712 sf 70.66% Impervious Runoff Depth=3.60"
Flow Length=325' Tc=6.0 min CN=80 Runoff=2.8 cfs 8,617 cf

Subcatchment20S: Watershed 20S Runoff Area=6,001 sf 9.93% Impervious Runoff Depth=0.66"
Flow Length=75' Slope=0.0220 '/' Tc=11.1 min CN=44 Runoff=0.0 cfs 331 cf

Reach 10R: 12" SD Avg. Flow Depth=0.50' Max Vel=8.41 fps Inflow=3.3 cfs 12,251 cf
12.0" Round Pipe n=0.005 L=95.0' S=0.0051 '/' Capacity=6.6 cfs Outflow=3.3 cfs 12,251 cf

Pond 2P: ICS2 Peak Elev=77.07' Inflow=2.8 cfs 8,617 cf
Primary=2.7 cfs 6,192 cf Secondary=0.3 cfs 2,425 cf Outflow=2.8 cfs 8,617 cf

Pond 10P: Subsurface UDSF1/OCS1 Peak Elev=77.07' Storage=14,001 cf Inflow=5.8 cfs 20,868 cf
Outflow=0.3 cfs 13,176 cf

Pond ICS1: ICS1 Peak Elev=77.08' Inflow=3.3 cfs 12,251 cf
Primary=2.7 cfs 8,257 cf Secondary=0.8 cfs 3,995 cf Outflow=3.3 cfs 12,251 cf

Link SP1: SP-1 Inflow=0.3 cfs 13,176 cf
Primary=0.3 cfs 13,176 cf

Link SP2: SP-2 Inflow=0.0 cfs 331 cf
Primary=0.0 cfs 331 cf

Total Runoff Area = 72,350 sf Runoff Volume = 21,199 cf Average Runoff Depth = 3.52"
32.07% Pervious = 23,204 sf 67.93% Impervious = 49,146 sf

Appendix E

Inspection, Maintenance and Housekeeping Plan

INSPECTION, MAINTENANCE, AND HOUSEKEEPING PLAN
Pine State Family Mart
1883 Forest Avenue
Portland, Maine 04103

Introduction

The responsible party for maintenance of the stormwater management facility following construction will be the City of Portland.

The Contract Documents will require the contractor to designate of person responsible for maintenance of the sedimentation control features during construction as required by the Erosion & Sedimentation Control Report.

The following plan outlines the anticipated inspection and maintenance procedures for the erosion and sedimentation control measures as well as stormwater management facilities for the project. This plan also outlines several housekeeping requirements that shall be followed during and after construction. These procedures shall be followed in order to ensure the intended function of the designed measures and to prevent unreasonably adverse impacts to the surrounding environment.

The procedures outlined in this Inspection, Maintenance and Housekeeping Plan are provided as an overview of the anticipated practices to be used on this site. In some instances, additional measures may be required due to unexpected conditions. For additional detail on any of the erosion and sedimentation control measures or stormwater management devices to be utilized on this project, refer to the most recently revised edition of the "Maine Erosion and Sedimentation Control BMP" manual and/or the "Stormwater Management for Maine: Best Management Practices" manual as published by the Maine Department of Environmental Protection (MDEP).

During Construction

1. **Inspection:** During the construction process, it is the Contractor's responsibility to comply with the inspection and maintenance procedures outlined in this section and the erosion and sedimentation control plan for the project. These responsibilities include inspecting disturbed and impervious areas, erosion control measures, materials storage areas that are exposed to precipitation, and locations where vehicles enter or exit the site. These areas shall be inspected at least once a week as well as before and after a storm event, and prior to completing permanent stabilization measures. A person with knowledge of erosion and stormwater control, including the standards and conditions in any applicable permits, shall conduct the inspections.

2. **Maintenance:** All measures shall be maintained in an effective operating condition until areas are permanently stabilized. If Best Management Practices (BMPs) need to be maintained or modified, additional BMPs are necessary, or other corrective action is needed, implementation must be completed within 7 calendar days and prior to any storm event (rainfall).

3. **Documentation:** A log summarizing the inspections and any corrective action taken must be maintained on-site. Correction action shall be performed in general conformance with the Maine Construction General Permit and Maine DEP Chapter 500 Stormwater standards. The log must

include the name(s) and qualifications of the person making the inspections, the date(s) of the inspections, and major observations about the operation and maintenance of erosion and sedimentation controls, material storage areas, and vehicle access points to the site. Major observations must include BMPs that need maintenance, BMPs that failed to operate as designed or proved inadequate for a particular location, and locations where additional BMPs are needed. For each BMP requiring maintenance, BMP needing replacement, and location needing additional BMPs, note in the log the corrective action taken and when it was taken. The log must be made accessible to the appropriate regulatory agency upon request. The permittee shall retain a copy of the log for a period of at least three years from the completion of permanent stabilization.

4. **Specific Inspection and Maintenance Tasks:** The following is a list of erosion control and stormwater management measures and the specific inspection and maintenance tasks to be performed during construction.

A. Filter Berms:

- Hay bale barriers, silt fences, and filter berms shall be inspected immediately after each rainfall and at least daily during prolonged rainfall.
- If the fabric on a silt fence or filter barrier should decompose or become ineffective prior to the end of the expected usable life and the barrier is still necessary, it shall be replaced.
- Sediment deposits should be removed after each storm event. They must be removed before deposits reach approximately one-half the height of the barrier.
- Filter berms shall be reshaped as needed.
- Any sediment deposits remaining in place after the silt fence or filter barrier is no longer required should be dressed to conform to the existing grade, prepared, and seeded.

B. Stone Check Dams:

- Inspect the center of the dam to make sure it is lower than the edges. Erosion caused by high flows around the edges of the dam must be corrected.
- Sediment accumulation shall be removed prior to reaching half of the original design height.
- Areas beneath stone check dams must be seeded and mulched upon removal.

C. Riprap Materials:

- Once a riprap installation has been completed, it should require very little maintenance. It shall, however, be inspected periodically to determine if high flows have caused scour beneath the riprap or dislodged any of the stone.

D. Erosion Control Blankets:

- Inspect these reinforced areas semi-annually and after significant rainfall events for slumping, sliding, seepage, and scour. Pay close attention to unreinforced areas adjacent to the erosion control blankets, which may experience accelerated erosion.
- Review all applicable inspection and maintenance procedures recommended by the

specific blanket manufacturer. These tasks shall be included in addition to the requirements of this plan.

E. Stabilized Construction Entrances/Exits:

- The exit shall be maintained in a condition that will prevent tracking of sediment onto public rights-of-way.
- When the control pad becomes ineffective, the stone shall be removed along with the collected soil material. The entrance should then be reconstructed.
- Areas that have received mud-tracking or sediment deposits shall be swept or washed. Washing shall be done on an area stabilized with aggregate, which drains into an approved sediment-trapping device (not into storm drains, ditches, or waterways).

F. Temporary Seed and Mulch:

- Mulched areas should be inspected after rain events to check for rill erosion.
- If less than 90% of the soil surface is covered by mulch, additional mulch shall be applied in bare areas.
- In applications where seeding and mulch have been applied in conjunction with erosion control blankets, the blankets must be inspected after rain events for dislocation or undercutting.
- Mulch shall continue to be reapplied until 95% of the soil surface has established temporary vegetative cover.

G. Stabilized Temporary Drainage Swales:

- Sediment accumulation in the swale shall be removed once the cross section of the swale is reduced by 25%.
- The swales shall be inspected after rainfall events. Any evidence of sloughing of the side slopes or channel erosion shall be repaired and corrective action should be taken to prevent reoccurrence of the problem.
- In addition to the stabilized lining of the channel (i.e. erosion control blankets), stone check dams may be needed to further reduce channel velocity.

5. **Housekeeping:** The following general performance standards apply to the proposed project.

A. Spill prevention: Controls must be used to prevent pollutants from being discharged from materials on-site, including storage practices to minimize exposure of the materials to stormwater, and appropriate spill prevention, containment, and response planning and implementation. A Spill, Prevention, Control and Countermeasures Plan is created for the project and is to be kept onsite at all times.

B. Groundwater protection: During construction, liquid petroleum products and other hazardous materials with the potential to contaminate groundwater may not be stored or handled in areas of the site draining to an infiltration area. An "infiltration area" is any area of the site that by design or as a result of soils, topography and other relevant factors, accumulates runoff that infiltrates into the soil. Dikes, berms, sumps, and other forms of secondary containment that prevent discharge to groundwater may be used to

isolate portions of the site for the purposes of storage and handling of these materials.

C. Fugitive sediment and dust: Actions must be taken to ensure that activities do not result in noticeable erosion of soils or fugitive dust emissions during or after construction. Oil may not be used for dust control.

D. Debris and other materials: Litter, construction debris, and chemicals exposed to stormwater must be prevented from becoming a pollutant source.

E. Trench or foundation dewatering: Trench dewatering is the removal of water from trenches, foundations, cofferdams, ponds, and other areas within the construction area that retain water after excavation. In most cases, the collected water is heavily silted and hinders correct and safe construction practices. The collected water must be removed from the ponded area, either through gravity or pumping, and must be spread through natural wooded buffers or removed to areas that are specifically designed to collect the maximum amount of sediment possible, like a cofferdam sedimentation basin. Avoid allowing the water to flow over disturbed areas of the site. Equivalent measures may be taken if approved.

Post-Construction

1. **Inspection:** After construction, it is the responsibility of the City of Portland to comply with the inspection and maintenance procedures outlined in this section. All measures must be maintained in effective operating condition. A person with knowledge of erosion and stormwater control, including the standards and conditions in all applicable permits, shall conduct the inspections.

2. **Specific Inspection and Maintenance Tasks:** The following is a list of permanent erosion control and stormwater management measures and the inspection and maintenance tasks to be performed after construction.

   A. Vegetated Areas:

   - Inspect vegetated areas, particularly slopes and embankments, early in the growing season or after heavy rains to identify active or potential erosion problems.
   - Replant bare areas or areas with sparse growth. Where rill erosion is evident, armor the area with an appropriate lining or divert the erosive flows to on-site areas able to withstand the concentrated flows.

   B. Ditches, Swales and Other Open Channels:

   - Inspect ditches, swales, level spreaders and other open stormwater channels in the spring, in the late fall, and after heavy rains to remove any obstructions to flow. Remove accumulated sediments and debris, remove woody vegetative growth that could obstruct flow, and repair any erosion of the ditch lining.
   - Vegetated ditches must be mowed at least annually or otherwise maintained to control the growth of woody vegetation and maintain flow capacity.
   - Any woody vegetation growing through riprap linings must also be removed.

Repair any slumping side slopes as soon as practicable.

- If the ditch has a riprap lining, replace riprap in areas where any underlying filter fabric or underdrain gravel is showing through the stone or where stones have dislodged.

C. Winter Sanding:

- Clear accumulations of winter sand along access road at least once a year, preferably in the spring.
- Accumulations of sand along road shoulders may be removed by grading excess sand to the pavement edge and removing it manually or by a front-end loader or other acceptable method.

D. Culverts:

- Inspect culverts in the spring, in the late fall, and after heavy rains to remove any obstructions to flow.
- Remove accumulated sediments and debris at the inlet, at the outlet, and within the conduit.
- Inspect and repair any erosion damage at the culvert's inlet and outlet.

E. Subsurface Sand Filter

- Inspect the site monthly for the first few months after construction. Then inspections can occur on an annual basis, preferably after rain events when clogging will be obvious.
- Make any repairs necessary to ensure the measure is operating properly.
- Regular maintenance is necessary to remove surface sediment, trash, debris, and leaf litter.
- Outlets and chambers need to be cleaned/repaired when drawdown times in the filter exceeds 36 hours.
- In certain cases, layers of sand may need to be replaced every 3 to 5 years.

J. Level Spreader:

- The level spreader pool should be inspected after rainfall events for sediment accumulation and debris that may reduce its capacity. Sediment and debris buildup should be removed once the volume of the pool has been reduced by 25%. The level berm must be constructed so that flows slowly seep across the berm as sheet flow to the receiving downstream drainage way. Repair or reconstruction of the berm is required when flow from the spreader becomes channelized.

3. **Documentation:**

A. The owner or operator of a BMP or a qualified post-construction stormwater inspector hired by that person, shall, on or by June 30 of each year, provide a completed and signed certification to DPS in a form provided by DPS, certifying that the person has inspected the BMP(s) and that they are adequately maintained and functioning as intended by the approved post-construction stormwater management plan, or that they required

maintenance or repair, including the record of the deficiency and corrective action(s) taken.

B. A log summarizing the inspections and any corrective action taken must be maintained. The log must include the name(s) and qualifications of the person making the inspections, the date(s) of the inspections, and major observations about the operation and maintenance of controls. Major observations must include BMPs that need maintenance, BMPs that failed to operate as designed or proved inadequate for a particular location, and locations where additional BMPs are needed. For each BMP requiring maintenance, BMP needing replacement, and location needing additional BMPs, note in the log the corrective action taken and when it was taken. The log must be made accessible to the appropriate regulatory agency upon request. A sample "Stormwater Inspection and Maintenance Form" has been included as Attachment 2 of this Inspection, Maintenance, and Housekeeping Plan.

4. Maine DEP Recertification: A certification of the following shall be submitted to the MDEP within three months of the expiration of each five-year interval from the date of issuance of MDEP permits.

A. Identification and repair of erosion problems. All areas of the project site have been inspected for areas of erosion, and appropriate steps have been taken to permanently stabilize these areas.

B. Inspection and repair of stormwater control system. All aspects of the stormwater control system have been inspected for damage, wear, and malfunction, and appropriate steps have been taken to repair or replace the system, or portions of the system.

C. The Inspection, Maintenance, and Housekeeping Plan for the site is being implemented as written, or modifications to the plan have been submitted to and approved by the MDEP, and the maintenance log is being maintained.

5. Duration of Maintenance: Perform maintenance as described and required for any associated permits unless and until the system is formally accepted by a municipality or quasi-municipal district or is placed under the jurisdiction of a legally created association that will be responsible for the maintenance of the system. If a municipality or quasi-municipal district chooses to accept a stormwater management system, or a component of a stormwater system, it must provide a letter to the MDEP stating that it assumes responsibility for the system. The letter must specify the components of the system for which the municipality or district will assume responsibility, and that the municipality or district agrees to maintain those components of the system in compliance with MDEP standards. Upon such assumption of responsibility, and approval by the MDEP, the municipality, quasi-municipal district, or association becomes a co-permittee for this purpose only and must comply with all terms and conditions of the permit.

Attachments

Attachment 1 – Stormwater Inspection and Maintenance Log Form

ATTACHMENT 1 – STORMWATER INSPECTION AND MAINTENANCE LOG

Pine State Family Mart
1883 Forest Avenue
Portland, Maine 04103

This log is intended to accompany the Inspection, Maintenance and Housekeeping Plan for the proposed Pine State Family Mart in Portland, Maine. The following items shall be checked, cleaned and maintained on a regular basis as specified in the Maintenance Plan and as described in the table below. This log shall be kept on file for a minimum of five (5) years and shall be available for review by the municipality. Qualified personnel familiar with drainage systems and soils shall perform all inspections. Attached is a copy of the construction and post-construction maintenance logs.

	INSPECTOR NAME	DATE PERFORMED	SUGGESTED INTERVAL
Vegetated Areas			
Inspect all slopes and embankments			Annually
Replant bare areas or areas with sparse growth			Annually
Paved Surfaces			
Clear accumulated winter sand			Annually
Remove sediment along edges and in pockets			Annually
Ditches & Swales			
Remove any obstructions and accumulated sediments and debris			Monthly
Repair any erosion of ditch lining			Annually
Mow vegetated ditches			Annually
Remove woody vegetation growing through riprap			Annually
Repair any slumping side slopes			Annually
Replace riprap where stones have dislodged			Annually
Catch Basins			
Remove accumulated sediments and debris in the sump and at grate			Annually
Culverts			
Remove accumulated sediments and debris at the inlet, outlet, within conduit			Annually
Repair any erosion at inlet and outlet			Annually
Sump Depth			Annually

Level Spreader				
	Remove sediment			Monthly
	Check for evidence of channelized flow over berm			Monthly
	Erosion (side slopes, embankment)			Monthly
	Mowed			Semi-Annually
Subsurface Sand Filter				
	Inspection of subsurface structure following major storm events			Semi-Annually (during first year)
	Inspection after major storm to ensure proper function			Bi-Annually
	Remove sediment and debris			Annually
	Clean/repair outlets and chambers			When drawdown times in filter exceed 36 hrs

Appendix F

Easements/Deed Restrictions

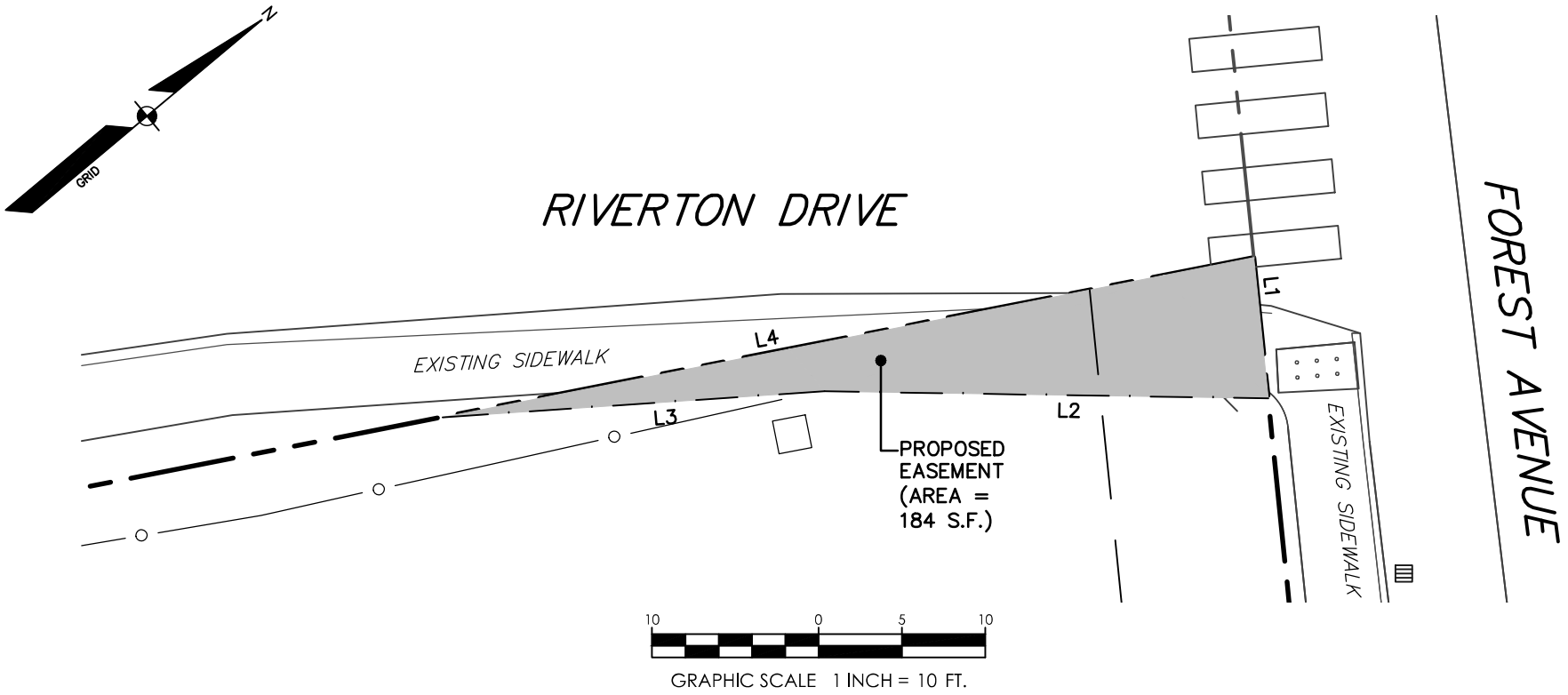

GENERAL NOTES:

1. THE RECORD OWNER OF THE LOCUS PARCEL IS JOHN CHAU AND PHUONG NEANG BY WARRANTY DEED DATED JUNE 20, 2008 AND RECORDED AT THE CUMBERLAND COUNTY REGISTRY OF DEEDS (CCRD) ON JUNE 23, 2008 IN BOOK 26148, PAGE 266.

2. THE PROPERTY IS SHOWN AS LOT 3, BLOCK B, ON THE CITY OF PORTLAND ASSESSORS MAP 327 AND IS LOCATED IN THE B-2 ZONE.

3. REFERENCE IS MADE TO PLANS ENTITLED "EXISTING CONDITIONS AND SITE PLAN OF PINE STATE FAMILY MART, 1884 FOREST AVE., PORTLAND, MAINE FOR JOHN CHAU" DATED SEPTEMBER 10, 2018, BY SEBAGO TECHNICS, INC.

EASEMENT LINE TABLE

LINE	DIRECTION	DISTANCE
L1	S 55°50'32" E	8.50'
L2	S 40°54'47" W	26.63'
L3	S 36°05'00" W	23.00'
L4	N 28°50'58" E	49.65'

SEBAGO TECHNICS
WWW.SEBAGOTECHNICS.COM
75 John Roberts Rd.
Suite 4A
South Portland, ME 04106
Tel. 207-200-2100

EXHIBIT 'A' SKETCH
OF PROPOSED SIDEWALK EASEMENT

SCALE: 1" = 10'
DATE: 09-11-18

LOCATION:
RIVERTON DRIVE/FOREST AVENUE
PORTLAND, MAINE

FOR:
PINE STATE FAMILY MART
1884 FOREST AVE., PORTLAND, MAINE

SHEET:
1 OF 3

11142S.dwg, TAB: EX1

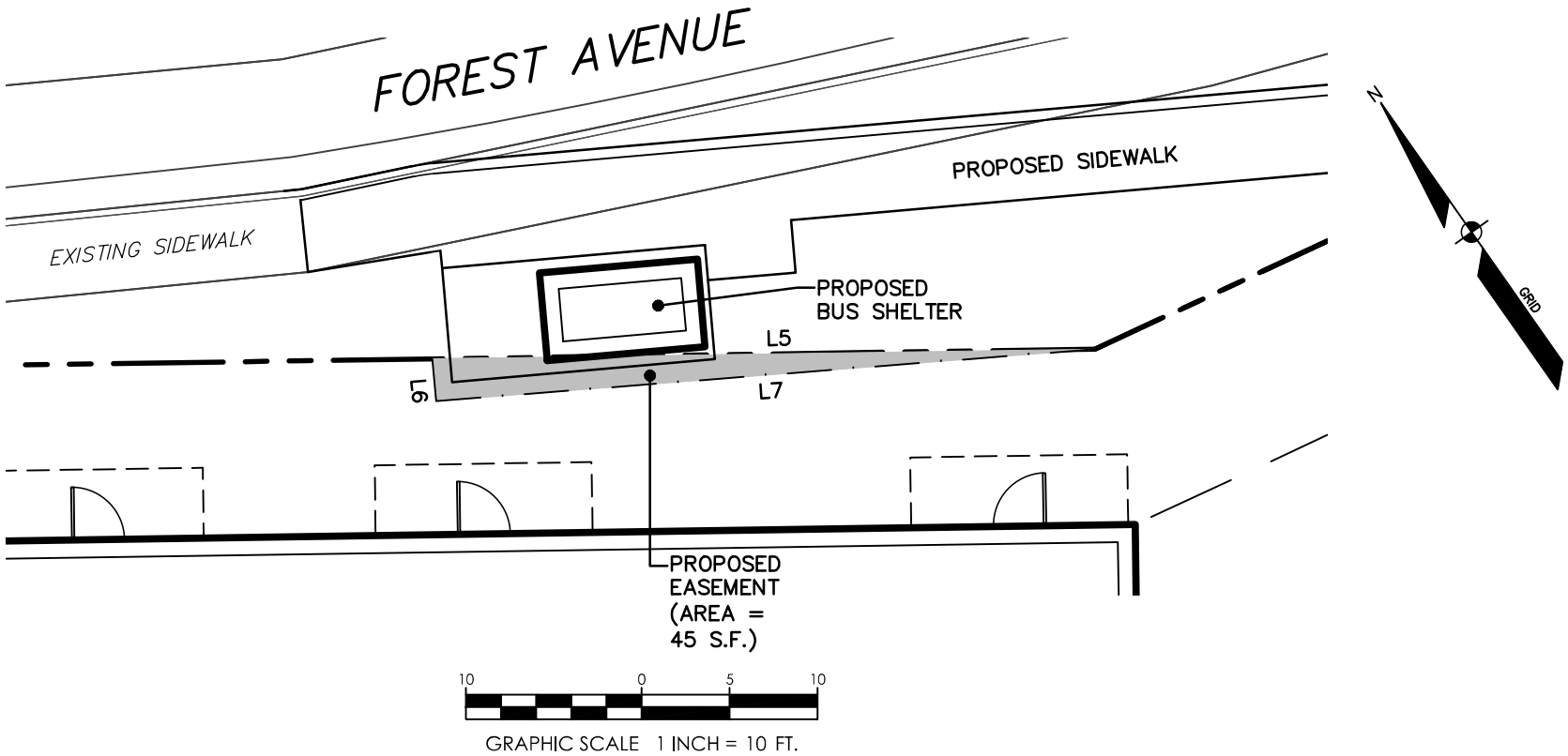

GENERAL NOTES:

1. THE RECORD OWNER OF THE LOCUS PARCEL IS JOHN CHAU AND PHUONG NEANG BY WARRANTY DEED DATED JUNE 20, 2008 AND RECORDED AT THE CUMBERLAND COUNTY REGISTRY OF DEEDS (CCRD) ON JUNE 23, 2008 IN BOOK 26148, PAGE 266.

2. THE PROPERTY IS SHOWN AS LOT 3, BLOCK B, ON THE CITY OF PORTLAND ASSESSORS MAP 327 AND IS LOCATED IN THE B-2 ZONE.

3. REFERENCE IS MADE TO PLANS ENTITLED "EXISTING CONDITIONS AND SITE PLAN OF PINE STATE FAMILY MART, 1884 FOREST AVE., PORTLAND, MAINE FOR JOHN CHAU" DATED SEPTEMBER 10, 2018, BY SEBAGO TECHNICS, INC.

EASEMENT LINE TABLE

LINE	DIRECTION	DISTANCE
L5	N 55°50'32" W	37.68'
L6	S 30°00'00" W	2.41'
L7	S 59°30'29" E	37.58'

SEBAGO TECHNICS
WWW.SEBAGOTECHNICS.COM
75 John Roberts Rd.
Suite 4A
South Portland, ME 04106
Tel. 207-200-2100

EXHIBIT 'B' SKETCH
OF PROPOSED SIDEWALK EASEMENT

SCALE: 1" = 10'
DATE: 09-11-18

LOCATION:
RIVERTON DRIVE/FOREST AVENUE
PORTLAND, MAINE

FOR:
PINE STATE FAMILY MART
1884 FOREST AVE., PORTLAND, MAINE

SHEET:
2 OF 3

11142S.dwg, TAB: EX2

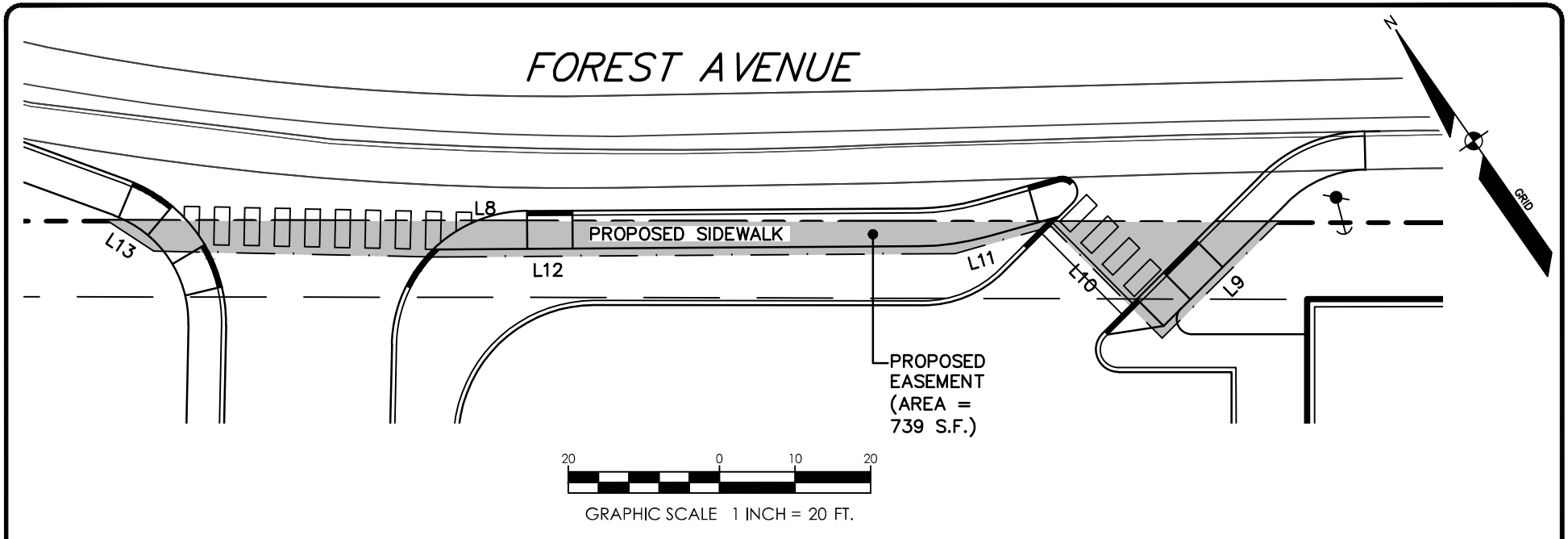

GENERAL NOTES:

1. THE RECORD OWNER OF THE LOCUS PARCEL IS JOHN CHAU AND PHUONG NEANG BY WARRANTY DEED DATED JUNE 20, 2008 AND RECORDED AT THE CUMBERLAND COUNTY REGISTRY OF DEEDS (CCRD) ON JUNE 23, 2008 IN BOOK 26148, PAGE 266.

2. THE PROPERTY IS SHOWN AS LOT 3, BLOCK B, ON THE CITY OF PORTLAND ASSESSORS MAP 327 AND IS LOCATED IN THE B-2 ZONE.

3. REFERENCE IS MADE TO PLANS ENTITLED "EXISTING CONDITIONS AND SITE PLAN OF PINE STATE FAMILY MART, 1884 FOREST AVE., PORTLAND, MAINE FOR JOHN CHAU" DATED SEPTEMBER 10, 2018, BY SEBAGO TECHNICS, INC.

EASEMENT LINE TABLE

LINE	DIRECTION	DISTANCE
L8	S 79°56'02" E	154.87'
L9	S 55°08'13" W	21.63'
L10	N 34°51'47" W	20.80'
L11	S 84°17'55" W	13.22'
L12	N 80°22'32" W	69.08'
L13	N 46°57'50" W	7.23'

SEBAGO TECHNICS
WWW.SEBAGOTECHNICS.COM
75 John Roberts Rd.
Suite 4A
South Portland, ME 04106
Tel. 207-200-2100

EXHIBIT 'C' SKETCH
OF PROPOSED SIDEWALK EASEMENT

SCALE: 1" = 20'
DATE: 09-11-18

LOCATION:
RIVERTON DRIVE/FOREST AVENUE
PORTLAND, MAINE

FOR:
PINE STATE FAMILY MART
1884 FOREST AVE., PORTLAND, MAINE

SHEET:
3 OF 3

11142S.dwg, TAB: EX3

Appendix G

Stormwater Management Plans

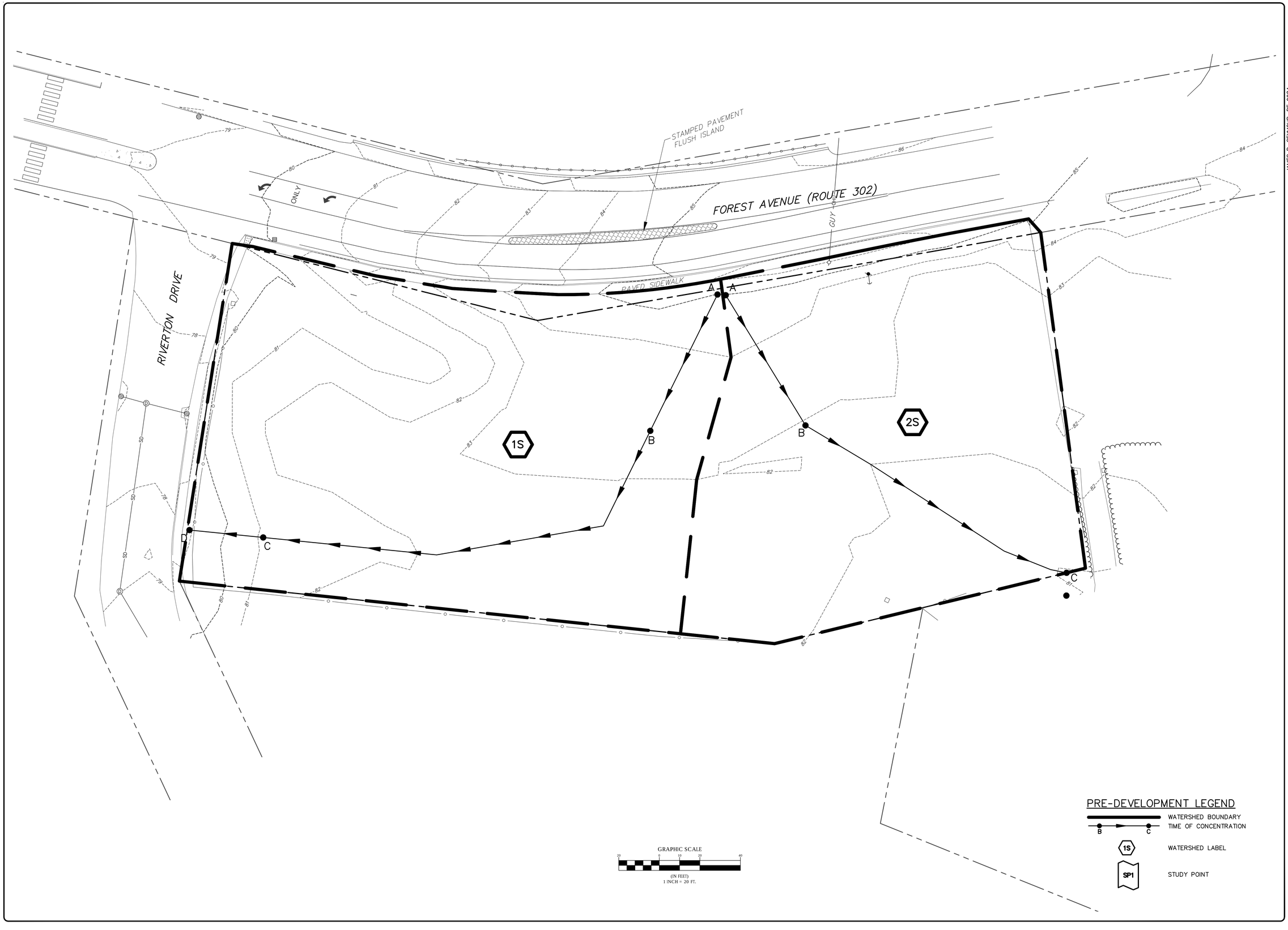

JAMES R. SEYMOUR, PE 9984

STATE OF MAINE — JAMES R. SEYMOUR No. 9984 — REGISTERED PROFESSIONAL ENGINEER — 04-18-19

DESIGNED	CHECKED
SAH	RLM

REV.	BY:	DATE:	STATUS
B	JRS	04-18-19	RESPONSE TO CITY COMMENTS
A	RLM	9-10-18	SUBMIT TO CITY OF PORTLAND

© COPYRIGHT 2018 SEBAGO TECHNICS, INC. ANY ALTERATIONS, AUTHORIZED OR OTHERWISE, SHALL BE AT THE USER'S SOLE RISK AND WITHOUT LIABILITY TO SEBAGO TECHNICS, INC.

SEBAGO TECHNICS
WWW.SEBAGOTECHNICS.COM
75 John Roberts Rd.
Suite 4A
South Portland, ME 04106
Tel. 207-200-2100

PRE-DEVELOPMENT WATERSHED PLAN

OF:
PINE STATE FAMILY MART
1884 FOREST AVENUE
PORTLAND, MAINE 04103

FOR:
JOHN CHAU
75 ARCADIA ST.
PORTLAND, MAINE 04103

PROJECT NO.	SCALE
11142	1" =20'

SHEET 11 OF 12

11142SWP.dwg, TAB: PRE

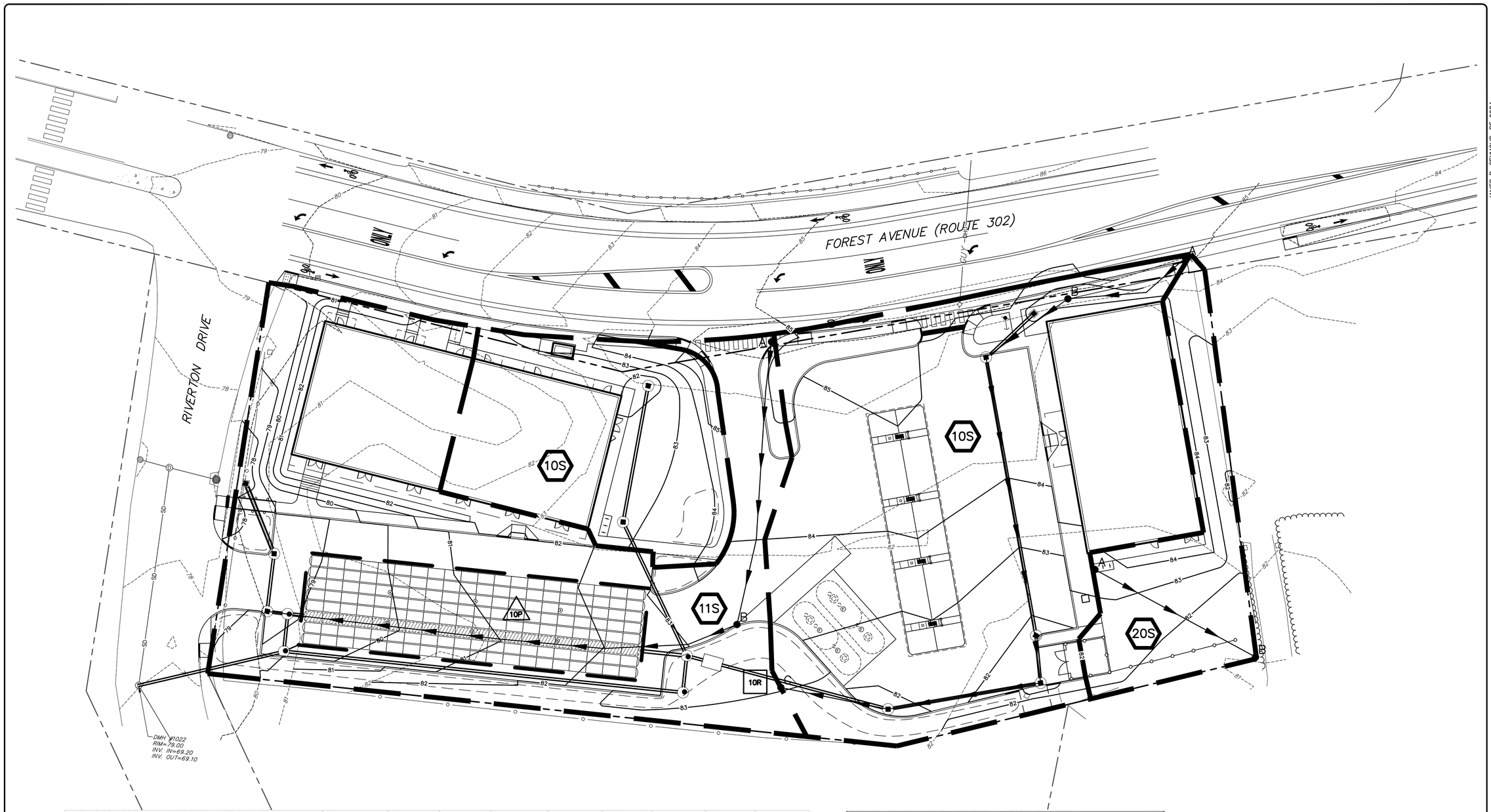

Table 1: MDEP GENERAL STANDARD CALCULATIONS

Job # 11142 Pine State Family Mart

AREA ID	WATERSHED SIZE (S.F.)	EXISTING ONSITE IMPERVIOUS AREA TO REMAIN (S.F.)	NEW ONSITE IMPERVIOUS AREA (S.F.)	EXISTING ONSITE LANDSCAPED AREA TO REMAIN (S.F.)	NEW ONSITE LANDSCAPED AREA (S.F.)	NET NEW DEVELOPED AREA (S.F.)	NET EXISTING DEVELOPED AREAS (S.F.)	TREATMENT PROVIDED?	IMPERVIOUS AREA TREATED (S.F.)	LANDSCAPED AREA TREATED* (S.F.)	DEVELOPED AREA TREATED (S.F.)	TREATMENT BMP
10 &11	66,349	147	48,403	2,101	15,698	64,101		YES	48,550	17,799	66,349	SSSF1
20	7,500	296	300	475	4,930	5,230		NO	0	0	0	
TOTAL (S.F.)	**73,849**	**443**	**48,703**	**2,576**	**20,628**	**69,331**	**0**		**48,550**	**17,799**	**66,349**	

TOTAL NEW IMPERVIOUS AREA (S.F.)	**48,703**	**TOTAL DEVELOPED AREA (S.F.)**	**69,331**
TOTAL IMPERVIOUS AREA RECEIVING TREATMENT (S.F.)	**48,550**	**TOTAL DEV. AREA RECEIVING TREATMENT (S.F.)**	**66,349**
% OF IMPERVIOUS AREA RECEIVING TREATMENT	**99.69%**	**% OF DEV. AREA RECEIVING TREATMENT**	**95.70%**

Stormwater Peak Runoff Summary Table			
Study Point	**Storm Event**	**Pre-Development (cfs)**	**Post-Development (cfs)**
SP-1	2-year	0.00	0.00
	10-year	0.00	0.01
	25-year	0.02	0.03
SP-2	2-year	0.00	0.00
	10-year	0.00	0.00
	25-year	0.01	0.00

GRAPHIC SCALE
20 0 10 20 40
(IN FEET)
1 INCH = 20 FT.

POST-DEVELOPMENT LEGEND

- WATERSHED BOUNDARY
- TIME OF CONCENTRATION (B — C)
- 10S — WATERSHED LABEL
- SP1 — STUDY POINT
- 10P — STORMWATER TREATMENT/DETENTION POND
- 10R — REACH

JAMES R. SEYMOUR, PE 9984

STATE OF MAINE — JAMES R. SEYMOUR No. 9984 — REGISTERED PROFESSIONAL ENGINEER — 04-18-19

DESIGNED	CHECKED
SAH	RLM

REV.	BY:	DATE:	STATUS
B	JRS	04-18-19	RESPONSE TO CITY COMMENTS
A	RLM	9-10-18	SUBMIT TO CITY OF PORTLAND

THIS PLAN SHALL NOT BE MODIFIED WITHOUT WRITTEN PERMISSION FROM SEBAGO TECHNICS, INC. ANY ALTERATIONS, AUTHORIZED OR OTHERWISE, SHALL BE AT THE USER'S SOLE RISK AND WITHOUT LIABILITY TO SEBAGO TECHNICS, INC.

SEBAGO TECHNICS
WWW.SEBAGOTECHNICS.COM
75 John Roberts Rd.
Suite 4A
South Portland, ME 04106
Tel: 207-200-2100

POST-DEVELOPMENT WATERSHED PLAN
OF:
PINE STATE FAMILY MART
1884 FOREST AVENUE
PORTLAND, MAINE 04103
FOR:
JOHN CHAU
75 ARCADIA ST.
PORTLAND, MAINE 04103

PROJECT NO.	SCALE
11142	1" =20'

SHEET 12 OF 12

11142SWP.dwg, TAB:POST

25: Consistency with City Master Plans (14-526 (c) 1)

- Identify consistency with master plans

    a. A formal Master Plan for the Riverton area of the City is not available. The proposed development is consistent with the adjacent uses and will not create an eyesore or diminish the neighborhood characteristics nor with the proposed site development include features that will burden the City's resources.

- Proposed easements, rights and improvements to connect or continue off-premises public infrastructure, as applicable

    b. Internal walks will be connected to the existing walks at Forest Avenue and Riverton Drive to provide continuous pedestrian access to the proposed development. Three sidewalk easements are proposed as part of the site development. One of the easements is prepared to allow for the installation/access to a new transit shelter adjacent to the proposed mixed-use retail building at the existing Greater Portland METRO bus stop. Coordination of the transit shelter design is underway between Gorrill-Palmer Consulting Engineers, Sebago Technics and Greater Portland METRO. Reference is made to the enclosed easement sketches and information in #6: Existing and/or Proposed Easements and Covenants and #14: Public Transit and on the enclosed site plans and details.

26: Public Safety and Fire Prevention (14-526(c))

- Address Crime Prevention through Environmental Design (CPTED) (Technical Manual, Section 3)

  Natural Surveillance: The site design allows formal and non-formal natural surveillance increasing safety of users and deterring possible offenders. The physical features of the project design maximize visibility to allow for surveillance opportunities to and from the site.

  The lighting of the site enables users to observe movement and activities on the site during the day and at night. The lighting plan addresses nighttime illumination of pedestrian ways. Reference is made to the Exterior Lighting (#33) containing site photometrics and light cut sheets. Mechanical surveillance systems may be installed as the discretion of the applicant and/or tenants.

  Access Management: Site plans have been designed to provide visible pathways and the layout, features and signage will clearly guide pedestrians and vehicular traffic along safe paths.

  Mechanical Access Control: Mechanical site access control systems are not proposed as part of the site development.

- Emergency vehicle access

  2.b. There is adequate access to the site for emergency vehicles. Please see the plan set.

- Address consistency with public safety standards (Technical Manual, Section 3)

  The site design complies with the applicable sections of the Technical Design Manual in the following manner:

  Fire Hydrant Standard: There is an existing fire hydrant at the northeasterly corner of the lot at Forest Avenue.

  Site Access Standards: Fire Department vehicles can access two sides of each building as required and there are no dead end roads associated with the project. The lot is directly connected to Forest Avenue and Riverton Drive allowing multiple emergency vehicle access points.

  Street Numbers: The assigned street numbers will be visible from the project signage on Forest Avenue and will also be placed on the building façades as required by the City of Portland.

- Submit a code summary referring NFPA 1 and all Fire Department standards (Technical Manual, Section 3)-Fire Checklist

  Please see the attached Fire Department Checklist, this section.

PORTLAND FIRE DEPARTMENT
SITE REVIEW
FIRE DEPARTMENT CHECKLIST

A separate drawing[s] shall be provided as part of the site plan application for the Portland Fire Department's review.

1. Name, address, telephone number of applicant John Chau, 75 Arcadia St., Portland, ME 04103
2.
3. Name address, telephone number of architect Ryan Senatore Architecture, 207-747-5159, ryan@senatorearchitecture.com
   565 Congress Street, Suite 304, Portland, ME 04101
4. Proposed uses of any structures [NFPA and IBC classification]
5. Retail IBC2015: M-Mercantile, NFPA101-Mercantile Class C (ea. space)
   Convenience Store IBC2015=M-Mercantile, NFPA101-Mercantile Class B
6. Square footage of all structures [total and per story] (2) One-story buildings:
   7,800 SF +/- Mixed retail and 5,000 SF +/- Convenience Store with 4 Fueling Islands
7. Elevation of all structures Retail: 25'-8" Convenience Store: 25'-6"

8. Proposed fire protection of all structures
   - ***As of September 16, 2010 all new construction of one and two family homes are required to be sprinkled in compliance with NFPA 13D. This is required by City Code. (NFPA 101 2009 ed.)***

9. Hydrant locations A hydrant is located at the northeasterly corner of the property at the Forest Avenue R.O.W.
10. Water main[s] size and location A 12" Water Main exists on the southerly side of Forest Avenue. Domestic and fire protection service will extend from the main as shown on the enclosed Grading and Utility Plan.
11. Access to all structures [min. 2 sides] Yes. See Site Plan.
12. A code summary shall be included referencing NFPA 1 and all fire department. Technical standards. To be provided by the project architect under separate cover.

Some structures may require Fire flows using annex H of NFPA 1

PINE STATE FAMILY MART

1884 FOREST AVENUE
PORTLAND, MAINE 04103

APPLICANT:
JOHN CHAU
75 ARCADIA ST.
PORTLAND, MAINE 04103

ENGINEER/SURVEYOR/
LANDSCAPE ARCHITECT:

SEBAGO TECHNICS
WWW.SEBAGOTECHNICS.COM
75 John Roberts Rd.
Suite 4A
South Portland, ME 04106
Tel. 207-200-2100

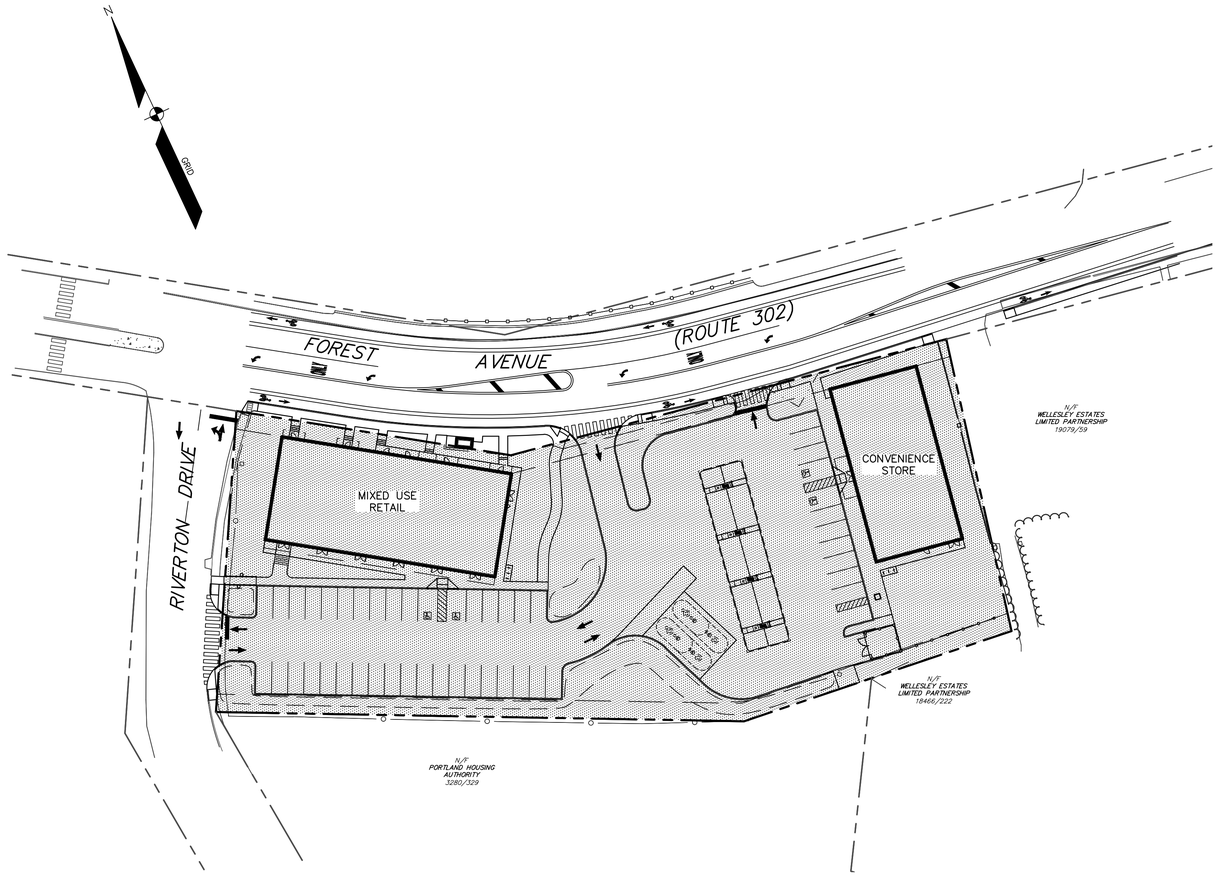

SCALE: 1" = 40'

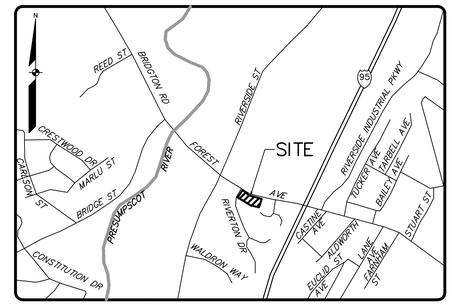

LOCATION MAP NTS

SHEET LIST TABLE

SHEET NUMBER	SHEET TITLE
1	COVER SHEET
2	EXISTING CONDITIONS PLAN
3	SITE PLAN
4A	SIGNAGE & WAYFINDING PLAN
4	GRADING & UTILITY PLAN
5	LANDSCAPE PLAN & DETAILS
6	EROSION CONTROL NOTES & DETAILS
7	DETAILS
8	DETAILS
9	DETAILS
1 OF 2	PRE-DEVELOPMENT WATERSHED PLAN
2 OF 2	POST-DEVELOPMENT WATERSHED PLAN
1 OF 1	OFFSITE IMPROVEMENT PLAN

REVISED THROUGH 08-28-19

11142c.dwg, TAB:C

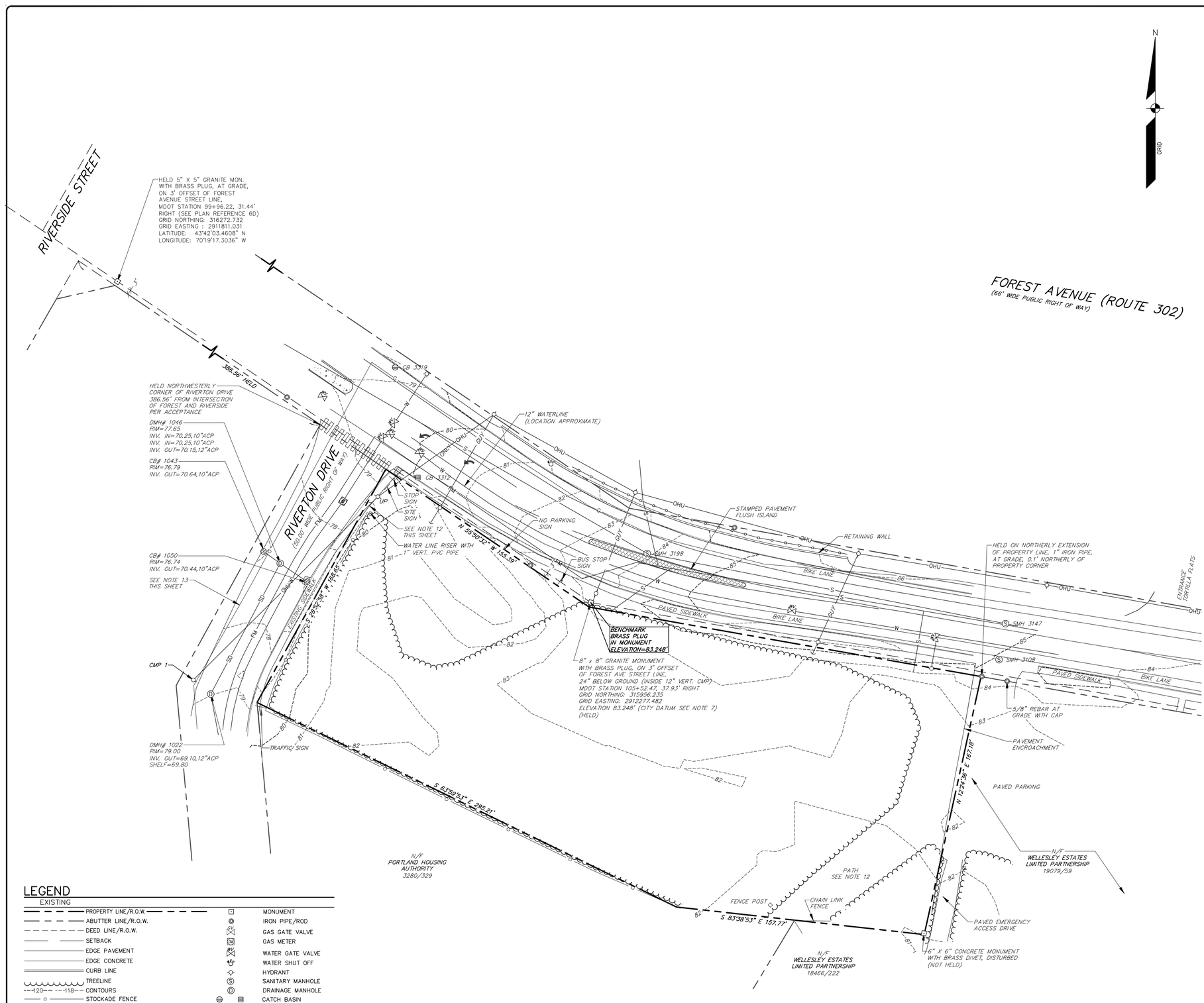

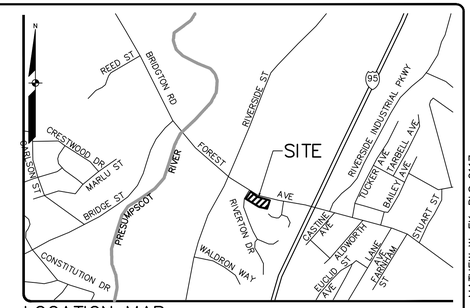

LOCATION MAP N.T.S.

GENERAL NOTES:

1. THE RECORD OWNER OF THE LOCUS PARCEL IS JOHN CHAU AND PHUONG NEANG BY WARRANTY DEED DATED JUNE 20, 2008 AND RECORDED AT THE CUMBERLAND COUNTY REGISTRY OF DEEDS (CCRD) ON JUNE 23, 2008 IN BOOK 26148, PAGE 266.

2. THE PROPERTY IS SHOWN AS LOT 3, BLOCK B, ON THE CITY OF PORTLAND ASSESSORS MAP 327 AND IS LOCATED IN THE B-2 ZONE.

3. SPACE AND BULK CRITERIA:

   B-2 ZONE
   BUSINESS AND NON-RESIDENTIAL USES

MIN. LOT SIZE:	NONE
MIN. STREET FRONTAGE:	20 FEET
MIN. FRONT YARD:	NONE
MAX. FRONT YARD:	NO MORE THAN 10 FEET *
MIN. SIDE YARD:	NONE *
MIN. REAR YARD:	10 FEET *
MAX. BUILDING HEIGHT:	45 FEET *
MAX. IMPERVIOUS SURFACE RATIO:	80% *

   * SEE ORDINANCE FOR MORE PARTICULAR INFORMATION.

4. TOTAL AREA OF PARCEL IS APPROXIMATELY 1.61 ACRES.

5. BOUNDARY AND TOPOGRAPHIC INFORMATION SHOWN HEREON IS BASED UPON A FIELD SURVEY BY SEBAGO TECHNICS DURING JULY AND AUGUST OF 2011, JANUARY OF 2012, AND APRIL OF 2018.

6. PLAN REFERENCES:
   A. BLUE SHEETS 34 AND 35 OF FOREST AVENUE AND ON FILE WITH THE PORTLAND DEPARTMENT OF PUBLIC WORKS.
   B. AMENDED SUBDIVISION PLAN ON FOREST AVENUE, PORTLAND, MAINE MADE FOR OWNER: WESLLESEY ESTATES, LLC DATED OCTOBER 8, 2002 AND REVISED THROUGH 12-18-02 BY OWEN HASKELL, INC. AND RECORDED IN PLAN BOOK 202 PAGE 744 CCRD.
   C. PLAN OF RIVERTON DRIVE, BY THE CITY OF PORTLAND PUBLIC WORKS DEPARTMENT, AND ON FILE AS 493/5 WITH THE SAME.
   D. MAINE DEPARTMENT OF TRANSPORTATION(MDOT), RIGHT OF WAY MAP FOR STATE HIGHWAY "14", US ROUTE 302 – FOREST AVENUE, DATED MAY 2011, AND ON FILE WITH THE SAME AS D.O.T. FILE NO. 3-572.
   E. TURNKEY FAMILY HOUSING, FOREST AVENUE, PORTLAND, MAINE, BY OWEN HASKELL, INC. REVISED THROUGH JUNE 8, 1971.

7. PROJECT ELEVATIONS SHOWN HEREON ARE BASED ON THE TOP OF THE BRASS PLUG IN A GRANITE MON. LOCATED GENERALLY AT THE NORTHERLY MIDDLE OF THE LOCUS PROPERTY. THE CITY OF PORTLAND PUBLISHED ELEVATION OF 83.248 IS HELD (SEE LEVEL BOOK 316 PAGE 106) AS THE DATUM AS SHOWN HEREON. THE ELEVATION OF THIS BENCHMARK WAS CHECKED AGAINST PRE-EXISTING MDOT CONTROL FROM A SURVEY PERFORMED IN 2006. THE CORRELATION OF 88 DATUM TO CITY DATUM OF THESES CONTROL POINTS MEETS THE EXPECTATION OF THIS SURVEYOR.

8. PLAN ORIENTATION IS GRID NORTH, MAINE STATE PLANE COORDINATE SYSTEM, WEST ZONE, NORTH AMERICAN DATUM OF 1983 (NAD83).

9. THE STREET LINE OF FOREST AVENUE IS BASED ON HOLDING THE THREE FOOT OFFSET MONUMENT NEAR THE INTERSECTION OF FOREST AND RIVERSIDE STREETS, THE THREE FOOT OFFSET MONUMENT GENERALLY AT THE NORTHERLY MIDDLE OF THE LOCUS PROPERTY AND AN EASTERLY PROJECTED ANGLE OF 155° 54' 30" PER PLAN REFERENCE 6A

10. THE 16 FOOT WIDE EMERGENCY ACCESS EASEMENT SHOWN ON PLAN REFERENCE 6B HAS BEEN CONVEYED IN FEE TO WELLESLEY ESTATES LIMITED PARTNERSHIP PER WARRANTY DEED DATED MARCH 21, 2003 AND RECORDED AT CCRD ON MARCH 26, 2003 IN BOOK 19078, PAGE 59.

11. THE 1 INCH IRON PIPE FOUND AT THE NORTHEASTERLY CORNER OF THE LOCUS PROPERTY WAS HELD ON THE NORTHERLY EXTENSION OF THE EASTERLY PROPERTY LINE AS CALLED FOR IN THE LOCUS DEED. THE STREET LINE ACCEPTANCE FOR RIVERTON DRIVE WAS HELD FOR THE WESTERLY PROPERTY LINE AND RECORD ANGLES AND DISTANCES PER THE LOCUS DEED ARE HELD IN RELATION TO IT FOR THE SOUTHERLY PROPERTY LINE. THE RIVERTON DRIVE ACCEPTANCE DOES NOT CALL FOR AN ABUTTER AS IT RUNS ALONG THE LOCUS PARCEL.

12. STREET IMPROVEMENTS (EG. PAVEMENT AND CURBING) EXIST OVER THE NORTHWESTERLY CORNER OF THE LOCUS PROPERTY AND ARE SHOWN HEREON. THE SOUTHEASTERLY PORTION OF THE LOCUS PROPERTY IS CURRENTLY USED AS AN ACCESS TO AND FROM FOREST AVENUE BY THE TENANTS OF THE PORTLAND HOUSING. RECORD EASEMENT FOR THIS ACCESS OVER THE LOCUS PROPERTY WAS NOT FOUND.

13. UTILITIES SHOWN IN FOREST AVENEUE ARE DERIVED FROM FIELD LOCATIONS AND PLAN REFERENCE 6D. UTILITIES SHOWN IN RIVERTON DRIVE ARE DERIVED FROM FIELD LOCATIONS AND PLAN REFERENCE 6E. PHYSICAL LOCATIONS SHOULD BE FIELD VERIFIED BEFORE DIGGING.

14. ALL SUBSURFACE UTILITY LINES SHOWN HEREON ARE BASED SOLELY ON THE FIELD LOCATION OF VISIBLE STRUCTURES, SMH'S, CB'S, HYDRANTS, ETC.. IN CONJUNCTION WITH DESIGN AND OR AS-BUILT PLANS SUPPLIED TO SEBAGO TECHNICS INC. BY OTHERS. PRIOR TO ANY CONSTRUCTION, EXCAVATION, TEST BORINGS, DRILLING, ETC.. DIG SAFE MUST BE NOTIFIED AND A SITE IDENTIFICATION NUMBER ALONG WITH A SAFE TO DIG DATE OBTAINED. THE SITE CONTRACTOR SHALL BE RESPONSIBLE FOR FIELD VERIFYING THE LOCATION, DEPTH AND MATERIAL OF ALL SUBSURFACE UTILITY LINES SHOWN HEREON AND ANY AND ALL OTHERS LOCATED ON SITE WITHIN THE CONSTRUCTION AREA.

LEGEND

EXISTING

PROPERTY LINE/R.O.W.	MONUMENT
ABUTTER LINE/R.O.W.	IRON PIPE/ROD
DEED LINE/R.O.W.	GAS GATE VALVE
SETBACK	GAS METER
EDGE PAVEMENT	WATER GATE VALVE
EDGE CONCRETE	WATER SHUT OFF
CURB LINE	HYDRANT
TREELINE	SANITARY MANHOLE
420 CONTOURS 418	DRAINAGE MANHOLE
STOCKADE FENCE	CATCH BASIN
G GAS	UTILITY POLE
W WATER	GUY WIRE
S SANITARY SEWER	SIGN
FM FORCE MAIN	
SD STORM DRAIN	
UD UNDER DRAIN	
OHU OVERHEAD UTILITY	

GRAPHIC SCALE
30 0 15 30 60
(IN FEET)
1 INCH = 30 FT.

MATHEW W. EK, PLS 2117

DRAWN	CHECKED
MAC	MWE

REV.	BY:	DATE:	STATUS:
A	MWE	09-10-18	SUBMIT TO CITY OF PORTLAND

© COPYRIGHT SEBAGO TECHNICS, INC. ANY ALTERATIONS, ADDITIONS OR OTHERWISE, SHALL BE AT THE USER'S SOLE RISK AND WITHOUT LIABILITY TO SEBAGO TECHNICS, INC.
ALL DRAWINGS ARE NOT TO BE USED WITHOUT WRITTEN PERMISSION FROM SEBAGO TECHNICS, INC. AND ARE SUBJECT TO RETURN UPON REQUEST. ALL UNAUTHORIZED OR UNINTENDED USES WILL BE AT THE USER'S SOLE RISK AND WITHOUT LIABILITY TO SEBAGO TECHNICS, INC.

SEBAGO TECHNICS
WWW.SEBAGOTECHNICS.COM
75 John Roberts Rd.
Suite 4A
South Portland, ME 04106
Tel: 207-200-2100

EXISTING CONDITIONS PLAN
OF:
PINE STATE FAMILY MART
1884 FOREST AVENUE
PORTLAND, MAINE 04103
FOR:
JOHN CHAU
75 ARCADIA ST.
PORTLAND, MAINE 04103

PROJECT NO.	SCALE
11142	1" = 30'

SHEET 2 OF 9

11142 ec.dwg, TAB: ec

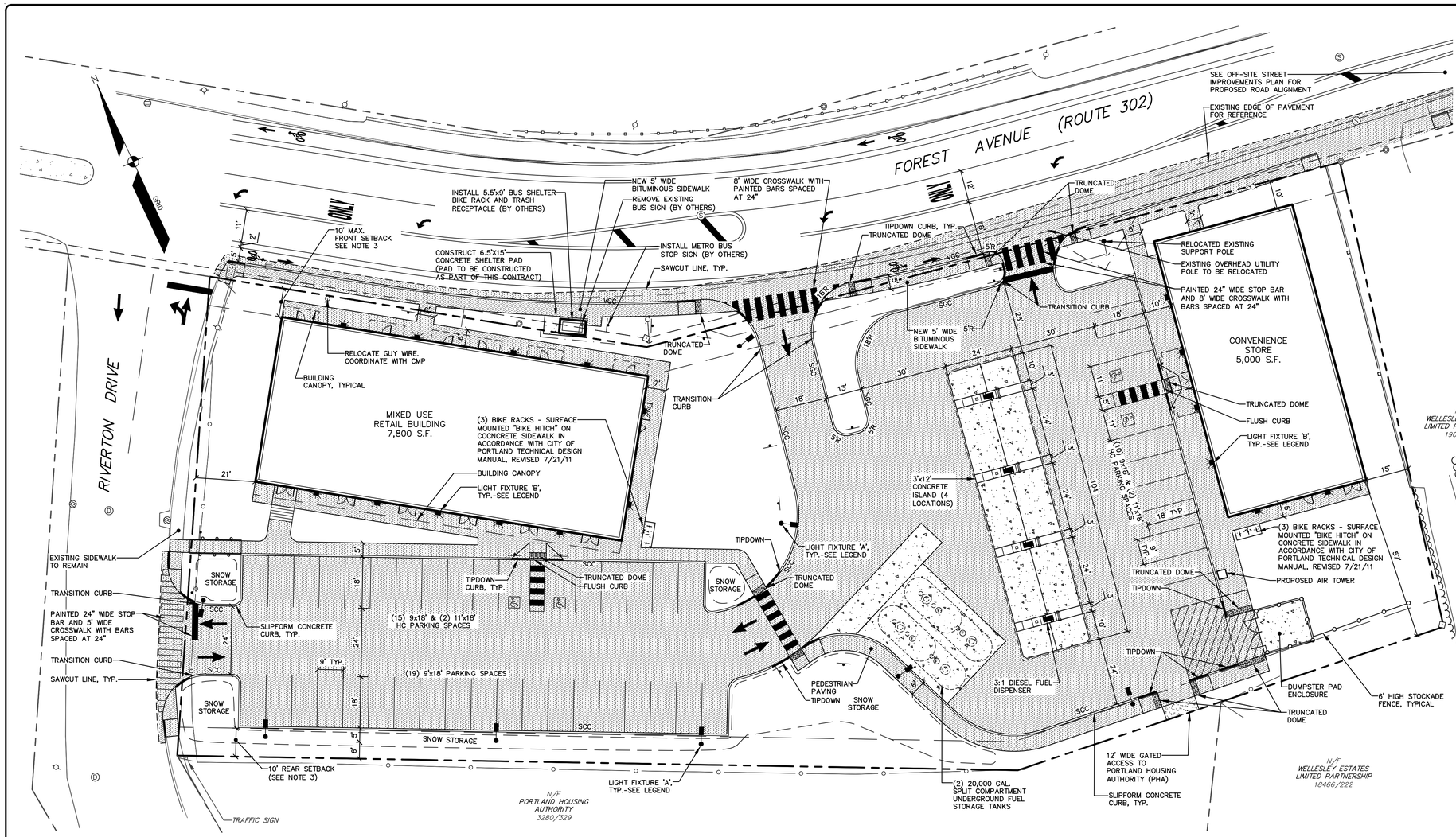

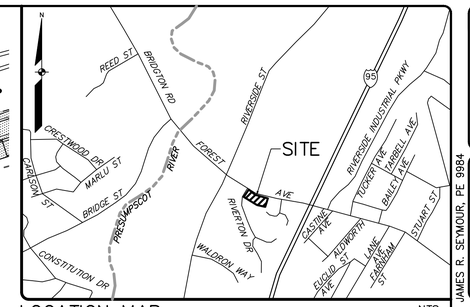

LOCATION MAP NTS

SIGN LEGEND

KEY	QTY.	COMMENTS
S-1	4	STOP SIGN
S-2	4	DO NOT EXIT
S-3	2	RIGHT TURN ONLY
S-4	5	VAN ACCESSIBLE HANDICAP PARKING
S-5	2	EXIT TO RT. 302 NORTH (WESTBROOK) (RIVERSIDE ST.)
S-6	1	EXIT TO RT. 302 SOUTH FOREST AVE./DOWNTOWN PORTLAND

LIGHT FIXTURE LEGEND

KEY	COMMENTS
A	SPAULDING CIMMARON 90 LED, 20 FT. POLE, COLOR BLACK
B	SPAULDING GEOPAK QUARTERSPHERE LED WALL PACK, 14 FT. MOUNTING HEIGHT, COLOR BLACK

CURB ABBREVIATIONS

SCC SLIPFORM CONCRETE CURB
SGC SLOPE GRANITE CURB
VGC VERTICAL GRANITE CURB

PARKING SUMMARY

PARKING REQUIRED: 1 SPACE PER 200SF IN EXCESS OF 2000SF NOT USED FOR BULK STORAGE

CONVENIENCE STORE: 5,000SF -2,000SF = 3,000 / 200SF
15 SPACES REQUIRED

RETAIL STORES: 6,274SF -2,000SF = 4,274 / 200SF
22 SPACES REQUIRED

TOTAL REQUIRED PARKING: 37 SPACES

TOTAL PROVIDED PARKING: 44 STANDARD SPACES
4 ACCESSIBLE SPACES
48 TOTAL PARKING SPACES

LEGEND

EXISTING	DESCRIPTION	PROPOSED
	PROPERTY LINE/R.O.W.	
	ABUTTER LINE/R.O.W.	
	TIE LINE	
	SETBACK	
	MONUMENT	
	IRON PIPE/ROD	
	DEED CALL	
	BUILDING	
	EDGE PAVEMENT	
	PAVEMENT SAWCUT	
	EDGE CONCRETE	
	PAVEMENT PAINT	
	CURB LINE	
	TREELINE	
	CHAIN LINK FENCE	
	STOCKADE FENCE	
	SIGN	
	SANITARY MANHOLE	
	DRAINAGE MANHOLE	
	CATCH BASIN	
	LIGHT POLE	
	UTILITY POLE	
	GUY WIRE	
	HYDRANT	

GENERAL NOTES:

1. THE RECORD OWNER OF THE LOCUS PARCEL IS JOHN CHAU AND PHUONG NEANG BY WARRANTY DEED DATED JUNE 20, 2008 AND RECORDED AT THE CUMBERLAND COUNTY REGISTRY OF DEEDS (CCRD) ON JUNE 23, 2008 IN BOOK 26148, PAGE 266.

2. THE PROPERTY IS SHOWN AS LOT 3, BLOCK B, ON THE CITY OF PORTLAND ASSESSORS MAP 327 AND IS LOCATED IN THE B-2 ZONE.

3. SPACE AND BULK CRITERIA:

B-2 ZONE BUSINESS AND NON-RESIDENTIAL USES	REQUIRED	PROVIDED
MIN. LOT SIZE:	NONE	70,132 S.F.
MIN. STREET FRONTAGE:	20 FEET	573.93 FEET
MAX. FRONT YARD:	NO MORE THAN 10 FEET*	10 FEET
MIN. SIDE YARD:	NONE*	15 FEET
MIN. REAR YARD:	10 FEET*	57 FEET
MAX. BUILDING HEIGHT:	45 FEET*	25'-8"
MAX. IMPERVIOUS SURFACE RATIO:	80%	70.01%

* SEE ORDINACE FOR MORE PARTICULAR INFORMATION

4. TOTAL AREA OF PARCEL IS APPROXIMATELY 1.61 ACRES.

5. BOUNDARY AND TOPOGRAPHIC INFORMATION SHOWN HEREON IS BASED UPON A FIELD SURVEY BY SEBAGO TECHNICS DURING JULY AND AUGUST OF 2011, JANUARY OF 2012, AND APRIL OF 2018.

6. PLAN REFERENCES:
   A. BLUE SHEETS 34 AND 35 OF FOREST AVENUE AND ON FILE WITH THE PORTLAND DEPARTMENT OF PUBLIC WORKS.
   B. AMENDED SUBDIVISION PLAN ON FOREST AVENUE, PORTLAND, MAINE MADE FOR OWNER: WESLLESEY ESTATES, LLC DATED OCTOBER 8, 2002 AND REVISED THROUGH 12-18-02 BY OWEN HASKELL, INC. AND RECORDED IN PLAN BOOK 202 PAGE 744 CCRD.
   C. PLAN OF RIVERTON DRIVE, BY THE CITY OF PORTLAND PUBLIC WORKS DEPARTMENT, AND ON FILE AS 493/5 WITH THE SAME.
   D. MAINE DEPARTMENT OF TRANSPORTATION(MDOT), RIGHT OF WAY MAP FOR STATE HIGHWAY "14", US ROUTE 302 – FOREST AVENUE, DATED MAY 2011, AND ON FILE WITH THE SAME AS D.O.T. FILE NO. 3-572.
   E. TURNKEY FAMILY HOUSING, FOREST AVENUE, PORTLAND, MAINE, BY OWEN HASKELL, INC. REVISED THROUGH JUNE 8, 1971.

7. PROJECT ELEVATIONS SHOWN HEREON ARE BASED ON THE TOP OF THE BRASS PLUG IN A GRANITE MON. LOCATED GENERALLY AT THE NORTHERLY MIDDLE OF THE LOCUS PROPERTY. THE CITY OF PORTLAND PUBLISHED ELEVATION OF 83.248 IS HELD (SEE LEVEL BOOK 316 PAGE 106) AS THE DATUM AS SHOWN HEREON. THE ELEVATION OF THIS BENCHMARK WAS CHECKED AGAINST PRE-EXISTING MDOT CONTROL FROM A SURVEY PERFORMED IN 2006. THE CORRELATION OF 88 DATUM TO CITY DATUM OF THESES CONTROL POINTS MEETS THE EXPECTATION OF THIS SURVEYOR.

8. PLAN ORIENTATION IS GRID NORTH, MAINE STATE PLANE COORDINATE SYSTEM, WEST ZONE, NORTH AMERICAN DATUM OF 1983 (NAD83).

9. THE STREET LINE OF FOREST AVENUE IS BASED ON HOLDING THE THREE FOOT OFFSET MONUMENT NEAR THE INTERSECTION OF FOREST AND RIVERSIDE STREETS, THE THREE FOOT OFFSET MONUMENT GENERALLY AT THE NORTHERLY MIDDLE OF THE LOCUS PROPERTY AND AN EASTERLY PROJECTED ANGLE OF 155° 54' 30" PER PLAN REFERENCE 6A

10. THE 16 FOOT WIDE EMERGENCY ACCESS EASEMENT SHOWN ON PLAN REFERENCE 6B HAS BEEN CONVEYED IN FEE TO WELLESLEY ESTATES LIMITED PARTNERSHIP PER WARRANTY DEED DATED MARCH 21, 2003 AND RECORDED AT CCRD ON MARCH 26, 2003 IN BOOK 19078, PAGE 59.

11. THE 1 INCH IRON PIPE FOUND AT THE NORTHEASTERLY CORNER OF THE LOCUS PROPERTY WAS HELD ON THE NORTHERLY EXTENSION OF THE EASTERLY PROPERTY LINE AS CALLED FOR IN THE LOCUS DEED. THE STREET LINE ACCEPTANCE FOR RIVERTON DRIVE WAS HELD FOR THE WESTERLY PROPERTY LINE AND RECORD ANGLES AND DISTANCES PER THE LOCUS DEED ARE HELD IN RELATION TO IT FOR THE SOUTHERLY PROPERTY LINE. THE RIVERTON DRIVE ACCEPTANCE DOES NOT CALL FOR AN ABUTTER AS IT RUNS ALONG THE LOCUS PARCEL.

12. STREET IMPROVEMENTS (EG. PAVEMENT AND CURBING) EXIST OVER THE NORTHWESTERLY CORNER OF THE LOCUS PROPERTY AND ARE SHOWN HEREON. THE SOUTHEASTERLY PORTION OF THE LOCUS PROPERTY IS CURRENTLY USED AS AN ACCESS TO AND FROM FOREST AVENUE BY THE TENANTS OF THE PORTLAND HOUSING. RECORD EASEMENT FOR THIS ACCESS OVER THE LOCUS PROPERTY WAS NOT FOUND.

13. UTILITIES SHOWN IN FOREST AVENEUE ARE DERIVED FROM FIELD LOCATIONS AND PLAN REFERENCE 6D. UTILITIES SHOWN IN RIVERTON DRIVE ARE DERIVED FROM FIELD LOCATIONS AND PLAN REFERENCE 6E. PHYSICAL LOCATIONS SHOULD BE FIELD VERIFIED BEFORE DIGGING.

14. ALL SUBSURFACE UTILITY LINES SHOWN HEREON ARE BASED SOLELY ON THE FIELD LOCATION OF VISIBLE STRUCTURES, SMH'S, CB'S, HYDRANTS, ETC.. IN CONJUNCTION WITH DESIGN AND OR AS-BUILT PLANS SUPPLIED TO SEBAGO TECHNICS INC. BY OTHERS, PRIOR TO ANY CONSTRUCTION, EXCAVATION, TEST BORINGS, DRILLING, ETC.. DIG SAFE MUST BE NOTIFIED AND A SITE IDENTIFICATION NUMBER ALONG WITH A SAFE TO DIG DATE OBTAINED. THE SITE CONTRACTOR SHALL BE RESPONSIBLE FOR FIELD VERIFYING THE LOCATION, DEPTH AND MATERIAL OF ALL SUBSURFACE UTILITY LINES SHOWN HEREON AND ANY AND ALL OTHERS LOCATED ON SITE WITHIN THE CONSTRUCTION AREA.

GRAPHIC SCALE
20 0 10 20 40
(IN FEET)
1 INCH = 20 FT.

APPROVAL-
CITY OF PORTLAND PLANNING BOARD

DATE

CHAIRPERSON

JAMES R. SEYMOUR, PE 9984
STATE OF MAINE
JAMES R. SEYMOUR
No. 9984
REGISTERED PROFESSIONAL ENGINEER
12-02-19

DESIGNED	CHECKED
SAH	RLM

REV.	BY:	DATE:	STATUS
F	JRS	12-02-19	SUBMIT FOR FINAL SITE PLAN REVIEW
E	JRS	10-21-19	SUBMIT FOR FINAL APPROVAL
D	JRS	10-04-19	REVISE PLANS FOR FINAL CITY APPROVAL
C	JRS	08-28-19	REVISE PLANS FOR FINAL CITY APPROVAL
B	JRS	04-18-19	RESPONSE TO CITY COMMENTS
A	RLM	09-10-18	SUBMIT TO CITY OF PORTLAND

THIS PLAN SHALL NOT BE MODIFIED WITHOUT WRITTEN PERMISSION FROM SEBAGO TECHNICS, INC. ANY ALTERATIONS, AUTHORIZED OR OTHERWISE, SHALL BE AT THE USER'S SOLE RISK AND WITHOUT LIABILITY TO SEBAGO TECHNICS, INC.

SEBAGO TECHNICS
WWW.SEBAGOTECHNICS.COM
75 John Roberts Rd.
Suite 4A
South Portland, ME 04106
Tel. 207-200-2100

SITE PLAN
OF:
PINE STATE FAMILY MART
1864 FOREST AVENUE
PORTLAND, MAINE 04103
FOR:
JOHN CHAU
75 ARCADIA ST
PORTLAND, MAINE 04103

PROJECT NO.	SCALE
11142	1"=20'

SHEET 3 OF 9

111425.dwg, TAB:S

APPROXIMATE LOCATION OF EXISTING CROSSWALK

PAINTED 24" WIDE STOP BAR

REMOVE EXISTING BUS SIGN (BY OTHERS)

INSTALL METRO BUS STOP SIGN (BY OTHERS)

8' WIDE CROSSWALK WITH PAINTED BARS SPACED AT 24"

LANE IMPROVEMENTS SAME AS PROPOSED IN 2013

FOREST AVENUE (ROUTE 302)

RIVERTON DRIVE

GRID N

MIXED USE RETAIL BUILDING

CONVENIENCE STORE

PAINTED 24" WIDE STOP BAR AND 8' WIDE CROSSWALK WITH BARS SPACED AT 24"

PAINTED 24" WIDE STOP BAR AND 8' WIDE CROSSWALK WITH BARS SPACED AT 24"

N/F WELLESLEY ESTATES LIMITED PARTNERSHIP 19079/59

12' WIDE GATED ACCESS TO PORTLAND HOUSING AUTHORITY (PHA)

N/F WELLESLEY ESTATES LIMITED PARTNERSHIP 18466/322

TRAFFIC SIGN

N/F PORTLAND HOUSING AUTHORITY 3280/329

S-1 S-2 S-3 S-4 S-5 S-6 S-7 S-8

SIGN LEGEND

KEY	QTY.	COMMENTS
S-1	2	STOP SIGN
S-2	3	DO NOT EXIT
S-3	1	RIGHT TURN ONLY
S-4	4	VAN ACCESSIBLE HANDICAP PARKING
S-5	2	EXIT TO RT. 302 NORTH (WESTBROOK) ↑ (RIVERSIDE ST.)
S-6	1	EXIT TO RT. 302 SOUTH FOREST → AVE./DOWNTOWN PORTLAND
S-7	2	ADA ACCESSIBLE ROUTE ↑ TO PARKING LOT SIDE
S-8	1	ADA ACCESSIBLE ROUTE → TO PARKING LOT SIDE

GRAPHIC SCALE
20 0 10 20 40
(IN FEET)
1 INCH = 20 FT.

JAMES R. SEYMOUR, PE 9984
STATE OF MAINE — JAMES R. SEYMOUR — No. 9984 — REGISTERED PROFESSIONAL ENGINEER
12-02-19

DESIGNED	CHECKED
SAH	RLM

REV:	BY:	DATE:	STATUS
D	JRS	12-02-19	SUBMIT FOR FINAL SITE PLAN REVIEW
C	JRS	08-28-19	REVISE PLANS FOR FINAL CITY APPROVAL
B	JRS	04-18-19	RESPONSE TO CITY COMMENTS
A	RLM	09-10-18	SUBMIT TO CITY OF PORTLAND

THIS PLAN SHALL NOT BE MODIFIED WITHOUT WRITTEN PERMISSION FROM SEBAGO TECHNICS, INC. ANY ALTERATIONS, AUTHORIZED OR OTHERWISE, SHALL BE AT THE USER'S SOLE RISK AND WITHOUT LIABILITY TO SEBAGO TECHNICS, INC.

SEBAGO TECHNICS
WWW.SEBAGOTECHNICS.COM
75 John Roberts Rd.
Suite 4A
South Portland, ME 04106
Tel. 207-200-2100

SIGNAGE & WAYFINDING PLAN
OF:
PINE STATE FAMILY MART
1884 FOREST AVENUE
PORTLAND, MAINE 04103
FOR:
JOHN CHAU
75 ARCADIA ST.
PORTLAND, MAINE 04103

PROJECT NO.	SCALE
11142	1"=20'

SHEET 4A OF 9

11142S2.dwg, TAB:S2

GRADING & EROSION NOTES

1. SIDESLOPES SHALL NOT BE STEEPER THAN 3:1 (H:V) EXCEPT AS OTHERWISE IDENTIFIED ON THIS PLAN. ALL SIDESLOPES STEEPER THAN 3:1 (H: V) SHALL BE LINED WITH EROSION CONTROL BLANKET, OR ADDITIONAL MEASURES AS INDICATED.
2. ALL SEDIMENT AND EROSION CONTROL MEASURES SHALL BE INSTALLED IN ACCORDANCE WITH "MAINE EROSION AND SEDIMENT CONTROL BMPS" MANUAL PUBLISHED BY BUREAU OF LAND AND WATER QUALITY MAINE DEPARTMENT OF ENVIRONMENTAL PROTECTION, MARCH 2003 OR LATEST EDITION. IT SHALL BE THE RESPONSIBILITY OF THE CONTRACTOR TO POSSESS A COPY OF THE EROSION CONTROL PLAN AT ALL TIMES.
3. ALL AREAS DISTURBED DURING CONSTRUCTION AND NOT RESTORED WITH IMPERVIOUS SURFACES (BUILDINGS, PAVEMENT, WALKS, ETC.) SHALL RECIEVE LOAM AND SEED PER DETAIL.

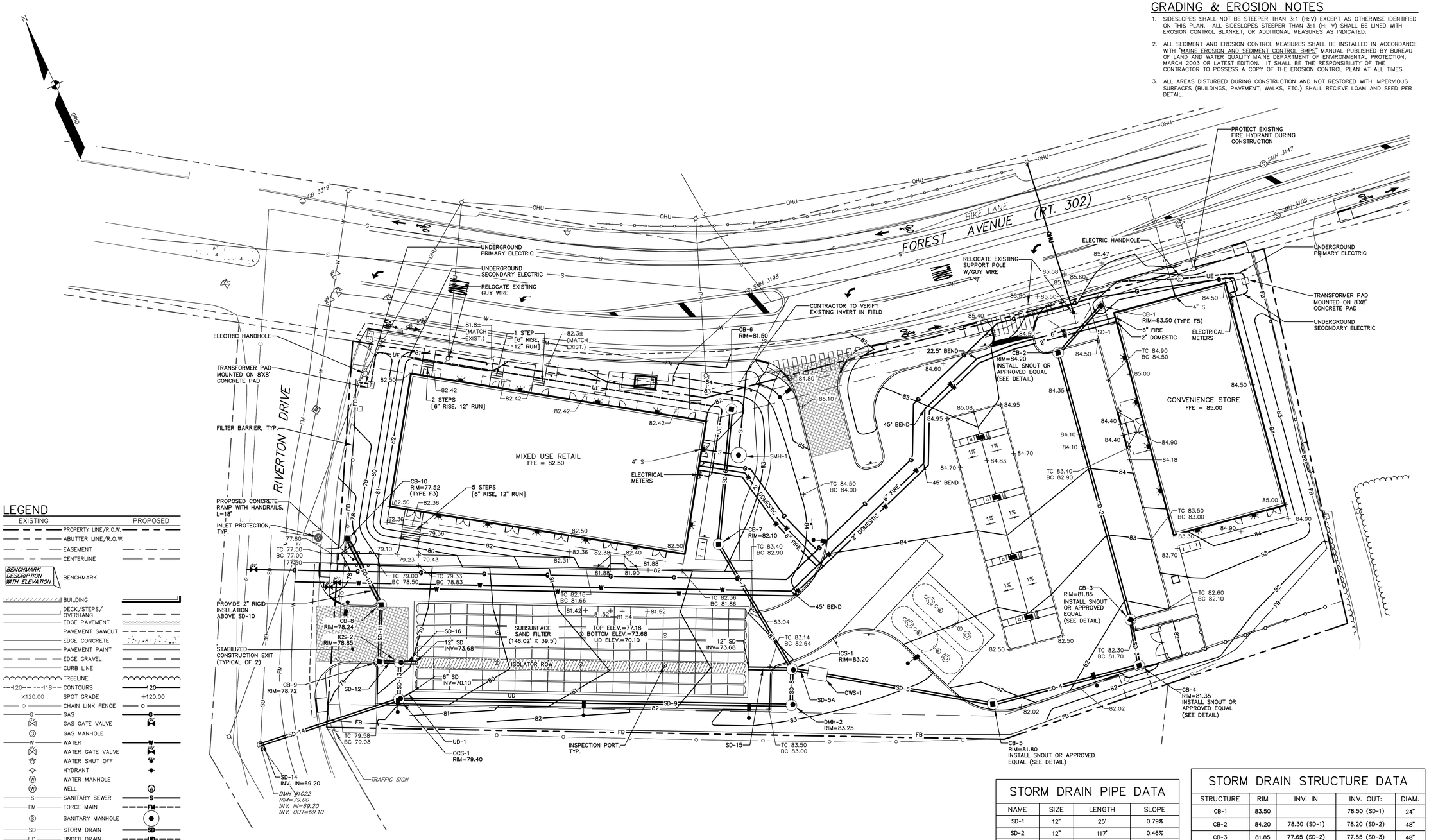

LEGEND

EXISTING	PROPOSED
PROPERTY LINE/R.O.W.	
ABUTTER LINE/R.O.W.	
EASEMENT	
CENTERLINE	
BENCHMARK DESCRIPTION WITH ELEVATION	BENCHMARK
BUILDING	
DECK/STEPS/ OVERHANG	
EDGE PAVEMENT	
PAVEMENT SAWCUT	
EDGE CONCRETE	
PAVEMENT PAINT	
EDGE GRAVEL	
CURB LINE	
TREELINE	
120 CONTOURS	120
×120.00 SPOT GRADE	+120.00
CHAIN LINK FENCE	
G GAS	G
GAS GATE VALVE	
G GAS MANHOLE	
W WATER	W
WATER GATE VALVE	
WATER SHUT OFF	
WATER MANHOLE	
W WELL	W
S SANITARY SEWER	S
FM FORCE MAIN	FM
S SANITARY MANHOLE	
SD STORM DRAIN	SD
UD UNDER DRAIN	UD
D DRAINAGE MANHOLE	
CATCH BASIN	
OHU OVERHEAD UTILITY	OHU
UGU UNDERGROUND UTILITY	UGU
T TRANSFORMER PAD	T
E ELECTRICAL MANHOLE	
EM ELECTRIC METER	
T TELEPHONE MANHOLE	
LIGHT POLE	
UTILITY POLE	
GUY WIRE	
EROSION CONTROL BLANKET	
FILTER BARRIER	FB
RIPRAP	
CHECK DAM	
INLET PROTECTION	

GRAPHIC SCALE
20 0 10 20 40
(IN FEET)
1 INCH = 20 FT.

STORM DRAIN PIPE DATA

NAME	SIZE	LENGTH	SLOPE
SD-1	12"	25'	0.79%
SD-2	12"	117'	0.46%
SD-3	12"	16'	0.55%
SD-4	12"	62'	0.57%
SD-5	12"	71'	0.94%
SD-5A	12"	5'	0.09%
SD-6	12"	55'	0.55%
SD-7	12"	59'	0.67%
SD-8	12"	12'	0.76%
SD-9	12"	167'	0.36%
SD-10	12"	29'	0.46%
SD-11	12"	21'	0.73%
SD-12	12"	5'	1.14%
SD-13	12"	12'	1.00%
SD-14	12"	61'	1.31%
SD-15	12"	17'	0.00%
SD-16	12"	5'	0.00%
UD-1	6"	5'	0.00%

STORM DRAIN STRUCTURE DATA

STRUCTURE	RIM	INV. IN	INV. OUT:	DIAM.
CB-1	83.50		78.50 (SD-1)	24"
CB-2	84.20	78.30 (SD-1)	78.20 (SD-2)	48"
CB-3	81.85	77.65 (SD-2)	77.55 (SD-3)	48"
CB-4	81.35	77.45 (SD-3)	77.35 (SD-4)	48"
CB-5	81.80	77.00 (SD-4)	76.90 (SD-5)	48"
CB-6	81.50		77.00 (SD-6)	48"
CB-7	82.10	76.70 (SD-6)	76.60 (SD-7)	48"
CB-8	78.24	74.35 (SD-10)	74.25 (SD-11)	48"
CB-9	78.72	74.10 (SD-11)	74.00 (SD-12)	48"
CB-10	77.52		74.50 (SD-10)	24"
DMH-2	83.25	75.00 (SD-8)	74.90 (SD-9)	48"
ICS-1	83.20	76.18 (SD-5A) 76.18 (SD-7)	73.68 (SD-15) 75.12 (SD-8)	48"
ICS-2	78.85	73.95 (SD-12)	75.12 (SD-13) 73.68 (SD-16)	48"
OCS-1	79.40	74.30 (SD-9) 75.00 (SD-13) 70.10 (UD-1)	70.00 (SD-14)	48"
OWS-1	83.40	76.19 (SD-5)	76.19 (SD-5A)	6'x13'

JAMES R. SEYMOUR, PE 9984

STATE OF MAINE — JAMES R. SEYMOUR No. 9984 — REGISTERED PROFESSIONAL ENGINEER — 04-09-19

DESIGNED	CHECKED
SAH	RLM

REV.	BY:	DATE:	STATUS:
C.	JRS	08-28-19	REVISE PLANS FOR FINAL CITY APPROVAL
B.	RLM	04-09-19	RESPONSE TO CITY COMMENTS
A.	RLM	09-10-18	SUBMIT TO CITY OF PORTLAND

ALL RIGHTS RESERVED UNPUBLISHED WORK. THIS DRAWING IS NOT TO BE REPRODUCED, PUBLISHED OR USED IN ANY WAY WITHOUT THE PERMISSION OF SEBAGO TECHNICS, INC. ANY ALTERATIONS, AUTHORIZED OR OTHERWISE, SHALL BE AT THE USER'S SOLE RISK AND WITHOUT LIABILITY TO SEBAGO TECHNICS, INC.

SEBAGO TECHNICS
WWW.SEBAGOTECHNICS.COM
75 John Roberts Rd.
Suite 4A
South Portland, ME 04106
Tel. 207-200-2100

GRADING & UTILITY PLAN
OF:
PINE STATE FAMILY MART
1884 FOREST AVENUE
PORTLAND, MAINE 04103
FOR:
JOHN CHAU
75 ARCADIA ST.
PORTLAND, MAINE 04103

PROJECT NO.	SCALE
11142	1" = 20'

SHEET 4 OF 9

11142GU.dwg, TAB: GU

GRADING & EROSION NOTES

1. SIDESLOPES SHALL NOT BE STEEPER THAN 3:1 (H:V) EXCEPT AS OTHERWISE IDENTIFIED ON THIS PLAN. ALL SIDESLOPES STEEPER THAN 3:1 (H:V) SHALL BE LINED WITH EROSION CONTROL BLANKET, OR ADDITIONAL MEASURES AS INDICATED.
2. ALL SEDIMENT AND EROSION CONTROL MEASURES SHALL BE INSTALLED IN ACCORDANCE WITH "MAINE EROSION AND SEDIMENT CONTROL BMPS" MANUAL PUBLISHED BY BUREAU OF LAND AND WATER QUALITY MAINE DEPARTMENT OF ENVIRONMENTAL PROTECTION, MARCH 2003 OR LATEST EDITION. IT SHALL BE THE RESPONSIBILITY OF THE CONTRACTOR TO POSSESS A COPY OF THE EROSION CONTROL PLAN AT ALL TIMES.
3. ALL AREAS DISTURBED DURING CONSTRUCTION AND NOT RESTORED WITH IMPERVIOUS SURFACES (BUILDINGS, PAVEMENT, WALKS, ETC.) SHALL RECIEVE LOAM AND SEED PER DETAIL.

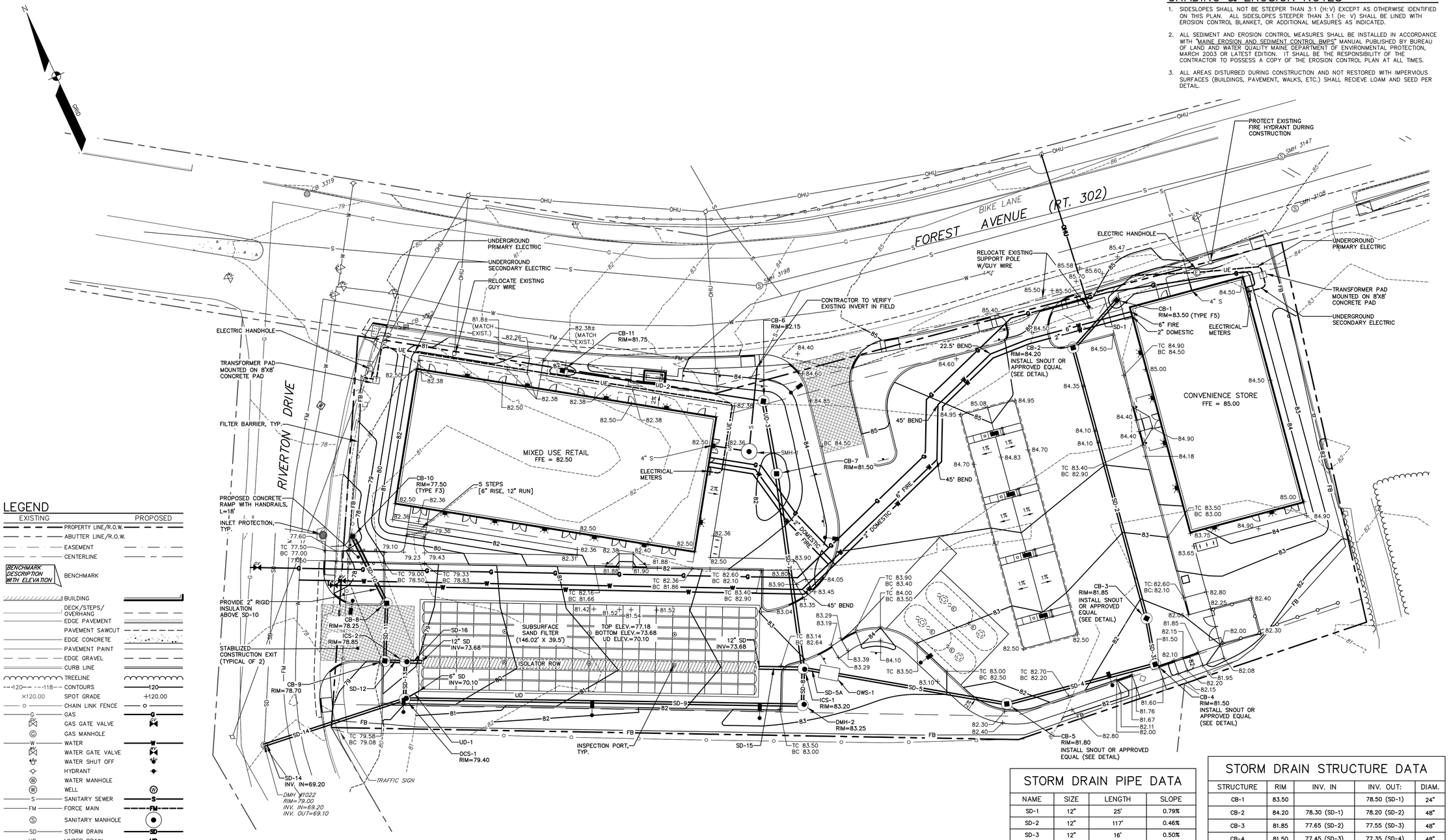

LEGEND

EXISTING		PROPOSED
	PROPERTY LINE/R.O.W.	
	ABUTTER LINE/R.O.W.	
	EASEMENT	
	CENTERLINE	
BENCHMARK DESCRIPTION WITH ELEVATION	BENCHMARK	
	BUILDING	
	DECK/STEPS/ OVERHANG	
	EDGE PAVEMENT	
	PAVEMENT SAWCUT	
	EDGE CONCRETE	
	PAVEMENT PAINT	
	EDGE GRAVEL	
	CURB LINE	
	TREELINE	
120 118	CONTOURS	120
×120.00	SPOT GRADE	+120.00
	CHAIN LINK FENCE	
G	GAS	G
	GAS GATE VALVE	
G	GAS MANHOLE	
W	WATER	W
	WATER GATE VALVE	
	WATER SHUT OFF	
	HYDRANT	
W	WATER MANHOLE	
W	WELL	W
S	SANITARY SEWER	S
FM	FORCE MAIN	FM
S	SANITARY MANHOLE	
SD	STORM DRAIN	SD
UD	UNDER DRAIN	UD
D	DRAINAGE MANHOLE	
	CATCH BASIN	
OHU	OVERHEAD UTILITY	OHU
UGU	UNDERGROUND UTILITY	UGU
T	TRANSFORMER PAD	T
E	ELECTRICAL MANHOLE	
EM	ELECTRIC METER	
T	TELEPHONE MANHOLE	
	LIGHT POLE	
	UTILITY POLE	
	GUY WIRE	
	EROSION CONTROL BLANKET	
	FILTER BARRIER	FB
	RIPRAP	
	CHECK DAM	
	INLET PROTECTION	

GRAPHIC SCALE
0 5 10 20 40
(IN FEET)
1 INCH = 20 FT.

STORM DRAIN PIPE DATA

NAME	SIZE	LENGTH	SLOPE
SD-1	12"	25'	0.79%
SD-2	12"	117'	0.46%
SD-3	12"	16'	0.50%
SD-4	12"	62'	0.55%
SD-5	12"	71'	0.94%
SD-5A	12"	5'	0.09%
SD-7	12"	80'	1.50%
SD-8	12"	12'	0.76%
SD-9	12"	167'	0.36%
SD-10	12"	29'	0.46%
SD-11	12"	21'	0.73%
SD-12	12"	5'	1.14%
SD-13	12"	12'	1.00%
SD-14	12"	61'	1.31%
SD-15	12"	17'	0.00%
SD-16	12"	5'	0.00%
UD-1	6"	5'	0.00%
UD-2	6"	83'	0.57%
UD-3	12"	28'	0.63%

STORM DRAIN STRUCTURE DATA

STRUCTURE	RIM	INV. IN	INV. OUT:	DIAM.
CB-1	83.50		78.50 (SD-1)	24"
CB-2	84.20	78.30 (SD-1)	78.20 (SD-2)	48"
CB-3	81.85	77.65 (SD-2)	77.55 (SD-3)	48"
CB-4	81.50	77.45 (SD-3)	77.35 (SD-4)	48"
CB-5	81.80	77.00 (SD-4)	76.90 (SD-5)	48"
CB-6	82.15	78.25 (UD-2)	77.75 (UD-3)	48"
CB-7	81.50	77.55 (UD-3)	77.45 (SD-7)	48"
CB-8	78.25	74.35 (SD-10)	74.25 (SD-11)	48"
CB-9	78.70	74.10 (SD-11)	74.00 (SD-12)	48"
CB-10	77.50		74.50 (SD-10)	24"
CB-11	81.75		78.75 (UD-2)	48"
DMH-2	83.25	75.00 (SD-8)	74.90 (SD-9)	48"
ICS-1	83.20	76.18 (SD-5A) 76.18 (SD-7)	73.68 (SD-15) 75.12 (SD-8)	48"
ICS-2	78.85	73.95 (SD-12)	75.12 (SD-13) 73.68 (SD-16)	48"
OCS-1	79.40	74.30 (SD-9) 75.00 (SD-13) 70.10 (UD-1)	70.00 (SD-14)	48" 6'x1.3'
OWS-1	83.40	76.19 (SD-5)	76.19 (SD-5A)	???

JAMES R. SEYMOUR, PE 9984

STATE OF MAINE — JAMES R. SEYMOUR No. 9984 — REGISTERED PROFESSIONAL ENGINEER — 10-21-19

DESIGNED	CHECKED
SAH	RLM

	BY:	DATE:	STATUS
E.	JRS	12-02-19	SUBMIT FOR FINAL SITE PLAN REVIEW
D.	JRS	10-21-19	SUBMIT FOR FINAL APPROVAL
C.	JRS	08-28-19	REVISE PLANS FOR FINAL CITY APPROVAL
B.	RLM	04-09-19	RESPONSE TO CITY COMMENTS
A.	RLM	09-10-18	SUBMIT TO CITY OF PORTLAND

REV: BY: DATE: STATUS

THIS PLAN SHALL NOT BE MODIFIED WITHOUT WRITTEN PERMISSION FROM SEBAGO TECHNICS, INC. ANY ALTERATIONS, AUTHORIZED OR OTHERWISE, SHALL BE AT THE USER'S SOLE RISK AND WITHOUT LIABILITY TO SEBAGO TECHNICS, INC.

SEBAGO TECHNICS
WWW.SEBAGOTECHNICS.COM
75 John Roberts Rd. Suite 4A
South Portland, ME 04106
Tel. 207-200-2100

GRADING & UTILITY PLAN
OF:
PINE STATE FAMILY MART
1884 FOREST AVENUE
PORTLAND, MAINE 04103
FOR:
JOHN CHAU
75 ARCADIA ST.
PORTLAND, MAINE 04103

PROJECT NO.	SCALE
11142	1" = 20'

SHEET 4 OF 9

11142GU.dwg, TAB: GU

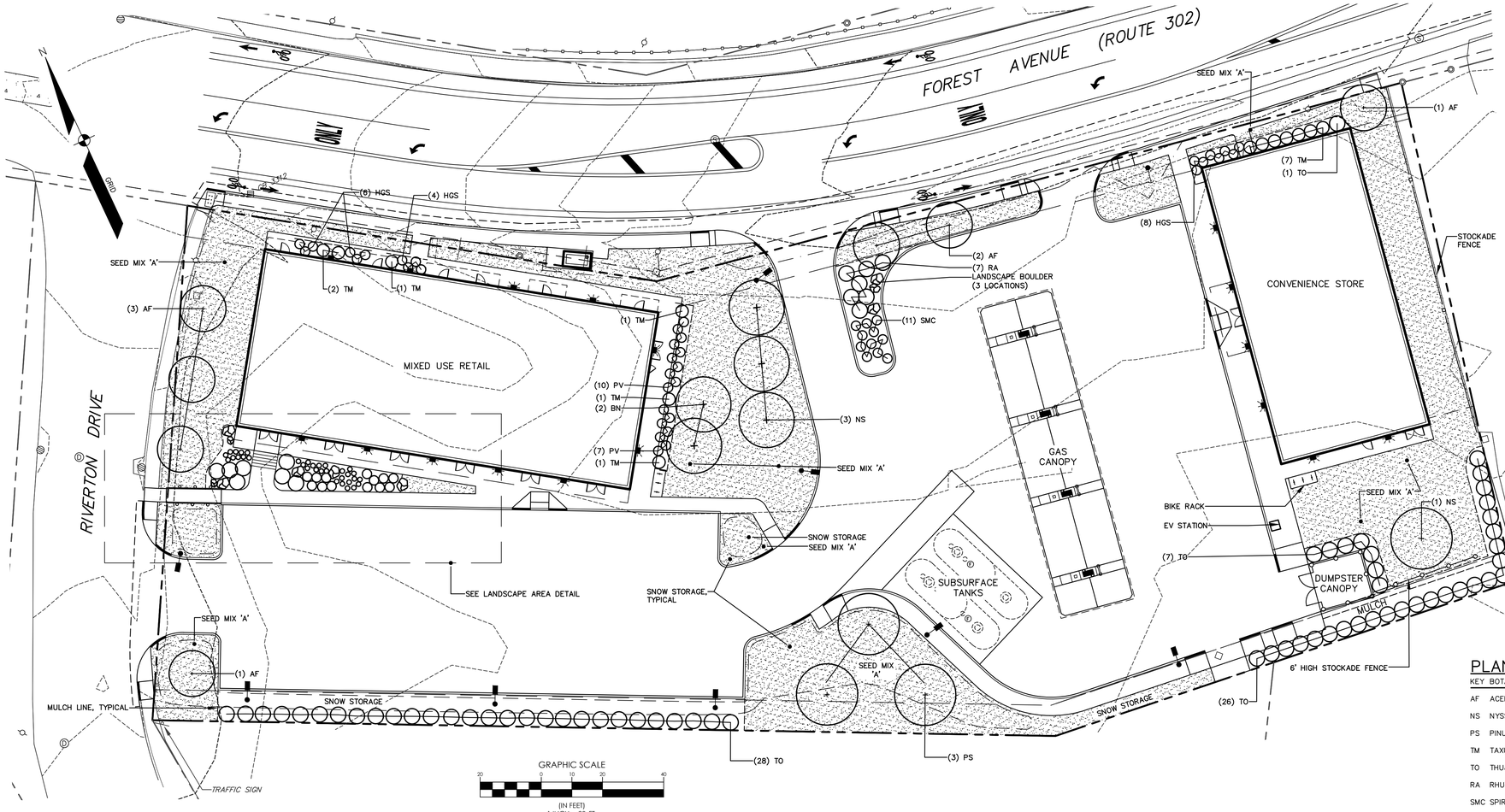

LANDSCAPE NOTES

1. PLANT QUANTITIES SHOWN ON PLANS ARE FOR CONVENIENCE TO THE CONTRACTOR ONLY. THE CONTRACTOR IS RESPONSIBLE FOR ALL PLANT MATERIAL INSTALLATION AS SHOWN ON PLANS.
2. SIZE AND GRADING STANDARDS OF PLANT MATERIALS SHALL CONFORM TO THE LATEST EDITION OF "U.S.A. STANDARD FOR NURSERY STOCK," BY THE AMERICAN ASSOCIATION OF NURSERYMEN, INC.
3. ALL PLANT MATERIAL SHALL BE FREE FROM INSECTS AND DISEASE.
4. ALL PLANTING SHALL BE DONE IN ACCORDANCE WITH ACCEPTABLE HORTICULTURAL PRACTICES. THIS IS TO INCLUDE PROPER PLANTING MIX, PLANT BED AND TREE PIT PREPARATION, PRUNING, STAKING OR GUYING, WRAPPING, SPRAYING, FERTILIZATION, PLANTING AND ADEQUATE MAINTENANCE UNTIL ACCEPTANCE BY THE OWNER.
5. PLANT MATERIAL SHALL BE GUARANTEED FOR A PERIOD OF ONE YEAR BY THE CONTRACTOR AND A PERIOD OF TWO YEARS THEREAFTER BY THE OWNER FROM DATE OF INSTALLATION. DURING THE ONE YEAR GUARANTEE PERIOD, DEAD PLANT MATERIAL SHALL BE REPLACED AT NO COST TO THE OWNER. AT THE END OF THE ONE YEAR PERIOD, THE CONTRACTOR SHALL OBTAIN FINAL ACCEPTANCE FROM THE OWNER.
6. ALL GRASS, OTHER VEGETATION AND DEBRIS SHALL BE REMOVED FROM ALL PLANTING AREAS PRIOR TO PLANTING.
7. EXISTING TREES TO BE PRESERVED WILL BE PROTECTED DURING CONSTRUCTION AND SHALL BE THE RESPONSIBILITY OF THE GENERAL CONTRACTOR.
8. THE LANDSCAPE CONTRACTOR IS ADVISED OF THE PRESENCE OF THE UNDERGROUND UTILITIES AND SHALL VERIFY THE EXISTENCE AND LOCATION OF SAME BEFORE COMMENCING AND DIGGING OPERATIONS. THE LANDSCAPE CONTRACTOR SHALL REPLACE OR REPAIR UTILITIES, PAVING, WALKS, CURBING, ETC. DAMAGED IN PERFORMANCE OF THIS JOB AT NO ADDITIONAL COST TO THE OWNER.
9. ALL SHRUB BEDS SHALL BE MULCHED WITH 3" CLEAN SHREDDED DARK BROWN BARK MULCH.
10. THE CONTRACTOR SHALL PROVIDE 4" LOAM FOR ALL AREAS TO BE SODDED OR SEEDED. PLANTING AREAS SHALL RECEIVE 12" ROLLED THICKNESS OF LOAM. THE LANDSCAPE CONTRACTOR SHALL COORDINATE SUBGRADE PREPARATION WITH THE GENERAL CONTRACTOR PRIOR TO PLACING LOAM.
11. ANY DEVIATION FROM THE LANDSCAPE PLAN, INCLUDING PLANT LOCATION, SELECTION, SIZE, QUANTITY OR CONDITION SHALL BE REVIEWED AND APPROVED BY THE OWNER AND LANDSCAPE ARCHITECT (AND MUNICIPAL AUTHORITY, IF APPLICABLE) PRIOR TO INSTALLATION ON SITE.
12. WHERE INDICATED ON PLAN, PLANTING SOIL MIXTURE FOR PERENNIAL AND ANNUAL FLOWER BED AREAS SHALL CONSIST OF FOUR PARTS TOPSOIL, TWO PARTS SPHAGNUM PEAT MOSS, AND ONE PART HORTICULTURAL PERLITE BY VOLUME. PEAT MOSS MAY BE SUBSTITUTED WITH WELL-ROTTED OR DEHYDRATED MANURE OR COMPOST. ROTOTILL BEDS TO A DEPTH OF 8 INCHES.

PLANT SCHEDULE

KEY	BOTANICAL NAME	COMMON NAME	SIZE / NOTES
AF	ACER X. FREEMANII 'ARMSTRONG'	RED MAPLE	3" CAL.
NS	NYSSA SYLVATICA	TUPELO	3" CAL.
PS	PINUS STROBUS	WHITE PINE	10'-12' HGT
TM	TAXUS X MEDIA 'TAUNTANII'	TAUNTANI YEW	18"-24"
TO	THUJA OCCIDENTALLIS 'SMARAGD'	EMERALD GREEN ARBORVITAE	3 IN. CAL.
RA	RHUS AROMATICA 'GRO-LOW'	FRAGRENT SUMAC	#3 CONTAINER
SMC	SPIRAEA 'MAGIC CARPET'	MAGIC CARPET SPIREA	#3 CONTAINER
JS	JUNIPERUS VAR. SARGENTII	SARGENTII JUNIPER	#3 CONTAINER
CA	CALAMAGROSTIS ACUTIFLORA 'OVERDAM'	DWARF FEATHER REED GRASS	#2 CONTAINER
HGS	HOSTA 'GOLD STANDARD'	GOLD STANDARD HOSTA	#1 CONTAINER
PV	PANICUM VIRGATUM 'CHEYENNE SKY'	CHEYENNE SKY SWITCHGRASS	#1 CONTAINER

SEED MIX A - MEDOT PARK MIX

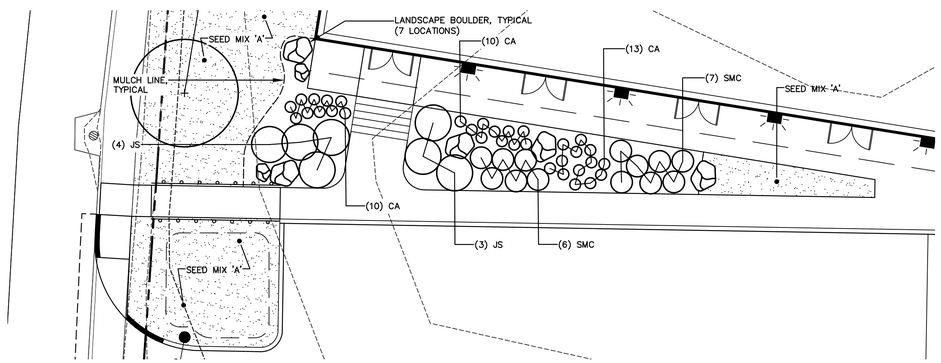

LANDSCAPE AREA DETAIL

1" = 10'

GRAPHIC SCALE
10 0 5 10 20
(IN FEET)
1 INCH = 10 FT.

LEGEND

EXISTING	PROPOSED
PROPERTY LINE/R.O.W.	
ABUTTER LINE/R.O.W.	
SETBACK	
EASEMENT	
BUILDING	
EDGE PAVEMENT	
CURB LINE	
EDGE OF WATER	
TREELINE	
MULCH LINE	
DECIDUOUS TREE	
CONIFEROUS TREE	
LIGHT POLE	
SIGN	

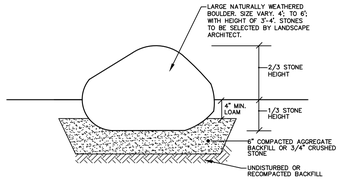

BOULDER INSTALLATION
NOT TO SCALE

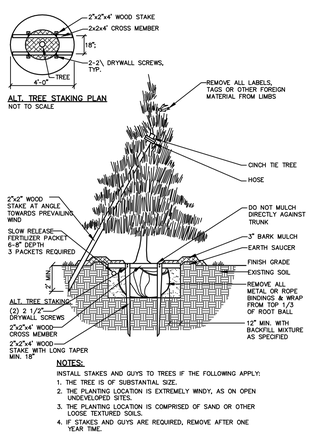

ALT. TREE STAKING PLAN
NOT TO SCALE

NOTES:
INSTALL STAKES AND GUYS TO TREES IF THE FOLLOWING APPLY:
1. THE TREE IS OF SUBSTANTIAL SIZE.
2. THE PLANTING LOCATION IS EXTREMELY WINDY, AS ON OPEN UNDEVELOPED SITES.
3. THE PLANTING LOCATION IS COMPRISED OF SAND OR OTHER LOOSE TEXTURED SOILS.
4. IF STAKES AND GUYS ARE REQUIRED, REMOVE AFTER ONE YEAR TIME.

EVERGREEN TREES
NOT TO SCALE

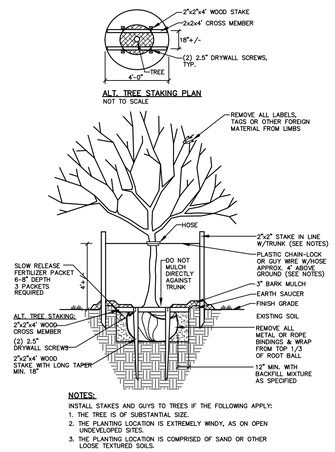

ALT. TREE STAKING PLAN
NOT TO SCALE

NOTES:
INSTALL STAKES AND GUYS TO TREES IF THE FOLLOWING APPLY:
1. THE TREE IS OF SUBSTANTIAL SIZE.
2. THE PLANTING LOCATION IS EXTREMELY WINDY, AS ON OPEN UNDEVELOPED SITES.
3. THE PLANTING LOCATION IS COMPRISED OF SAND OR OTHER LOOSE TEXTURED SOILS.
4. IF STAKES AND GUYS ARE REQUIRED, REMOVE AFTER ONE YEAR TIME.

DECIDUOUS TREES
NOT TO SCALE

DANIEL M. DANYERS, R.L.A. 4815

LICENSED LANDSCAPE ARCHITECT — DANIEL M. DANYERS 4815 — STATE OF MAINE — 12/03/2019

DESIGNED	CHECKED
DMD	DMD

REV	BY:	DATE:	STATUS
A	SOD	9-10-18	SUBMIT TO CITY OF PORTLAND
B	SOD	4-18-19	RESPONSE TO CITY COMMENTS
C	JRS	08-28-19	REVISE PLANS FOR FINAL CITY APPROVAL
D	JRS	12-02-19	SUBMIT FOR FINAL SITE PLAN REVIEW

THIS PLAN SHALL NOT BE MODIFIED WITHOUT WRITTEN PERMISSION FROM SEBAGO TECHNICS, INC. ANY ALTERATIONS, AUTHORIZED OR OTHERWISE, SHALL BE AT THE USER'S SOLE RISK AND WITHOUT LIABILITY TO SEBAGO TECHNICS, INC.

SEBAGO TECHNICS
WWW.SEBAGOTECHNICS.COM
75 John Roberts Rd.
Suite 4A
South Portland, ME 04106
Tel: 207-200-2100

LANDSCAPE PLAN & DETAILS
OF:
PINE STATE FAMILY MART
1884 FOREST AVENUE
PORTLAND, MAINE 04103
FOR:
JOHN CHAU
75 ARCADIA ST.
PORTLAND, MAINE 04103

PROJECT NO.	SCALE
11142	1" = 20'

SHEET 5 OF 9

11142L.dwg, TAB:L

EROSION CONTROL MEASURES:

PRE-CONSTRUCTION PHASE

PRIOR TO THE BEGINNING OF ANY CONSTRUCTION, SEDIMENT BARRIERS (SILT FENCE) WILL BE STAKED/INSTALLED ACROSS THE SLOPE(S), ON THE CONTOUR AT OR JUST BELOW THE LIMITS OF CLEARING OR GRUBBING, AND/OR JUST ABOVE ANY ADJACENT PROPERTY LINE OR WATERCOURSE TO PROTECT AGAINST CONSTRUCTION RELATED EROSION. THE PLACEMENT OF SEDIMENT BARRIERS SHALL BE COMPLETED IN ACCORDANCE WITH GUIDELINES ESTABLISHED IN BEST MANAGEMENT PRACTICES AND IN ACCORDANCE WITH THIS EROSION CONTROL PLAN AND DETAILS IN THIS PLAN SET. THIS NETWORK IS TO BE MAINTAINED BY THE CONTRACTOR UNTIL ALL EXPOSED SLOPES HAVE AT LEAST 85%-90% VIGOROUS PERENNIAL VEGETATIVE COVER TO PREVENT EROSION. TEMPORARY EROSION CONTROL MEASURES SHALL BE REMOVED WITHIN 30 DAYS AFTER PERMANENT STABILIZATION IS ATTAINED.

PRIOR TO ANY CLEARING OR GRUBBING, A CONSTRUCTION ENTRANCE/EXIT SHALL BE CONSTRUCTED AT THE INTERSECTION OF THE PROPOSED ENTRANCES AND EXISTING ROADWAY TO AVOID TRACKING OF MUD, DUST AND DEBRIS FROM THE SITE.

PRIOR TO CONSTRUCTION, THE CONTRACTOR SHALL PREPARE A DETAILED SCHEDULE AND MARKED UP PLAN INDICATING AREAS AND COMPONENTS OF THE WORK AND KEY DATES SHOWING DATE OF DISTURBANCE AND COMPLETION OF THE WORK. THE CONTRACTOR SHALL SCHEDULE A PRE-CONSTRUCTION MEETING WITH THE MUNICIPAL STAFF. THREE COPIES OF THE SCHEDULE AND MARKED UP PLAN SHALL BE PROVIDED TO THE MUNICIPALITY THREE DAYS PRIOR TO THE SCHEDULED PRE-CONSTRUCTION MEETING. SPECIAL ATTENTION SHALL BE GIVEN TO THE 14 DAY LIMIT OF DISTURBANCE IN THE SCHEDULE ADDRESSING TEMPORARY AND PERMANENT VEGETATION MEASURES.

CONSTRUCTION AND POST-CONSTRUCTION PHASE

AREAS UNDERGOING ACTUAL CONSTRUCTION SHALL ONLY EXPOSE THAT AMOUNT OF MINERAL SOIL NECESSARY FOR PROGRESSIVE AND EFFICIENT CONSTRUCTION . AN AREA CONSIDERED OPEN IS ANY AREA NOT STABILIZED WITH PAVEMENT, VEGETATION, MULCHING, EROSION CONTROL MATS, RIPRAP OR GRAVEL BASE ON A ROAD . OPEN AREAS SHALL BE ANCHORED WITH TEMPORARY EROSION CONTROL AS SHOWN ON THE DESIGN PLANS AND AS DESCRIBED WITHIN THIS EROSION CONTROL PLAN WITHIN 14-DAYS OF DISTURBANCE. AREAS LOCATED WITHIN 100' OF STREAMS SHALL BE ANCHORED WITH TEMPORARY EROSION CONTROL WITHIN SEVEN (7) DAYS. REFER TO WINTER EROSION CONTROL NOTES FOR THE TREATMENT OF OPEN AREAS AFTER OCTOBER 1ST OF THE CONSTRUCTION YEAR.

THE CONTRACTOR MUST INSTALL ANY ADDED MEASURES WHICH MAY BE NECESSARY TO CONTROL EROSION/SEDIMENTATION FROM THE SITE DEPENDENT UPON THE ACTUAL SITE AND WEATHER CONDITIONS. CONTINUATION OF EARTHWORK OPERATIONS ON ADDITIONAL AREAS SHALL NOT BEGIN UNTIL THE EXPOSED SOIL SURFACE ON THE AREA BEING WORKED HAS BEEN STABILIZED, IN ORDER TO MINIMIZE AREAS WITHOUT EROSION CONTROL PROTECTION.

EROSION CONTROL APPLICATIONS & MEASURES

THE PLACEMENT OF EROSION CONTROL MEASURES SHALL BE COMPLETED IN ACCORDANCE WITH GUIDELINES ESTABLISHED IN BEST MANAGEMENT PRACTICES AND IN ACCORDANCE WITH THE EROSION CONTROL PLAN AND DETAILS IN THE PLAN SET.

1. TEMPORARY MULCHING:

   ALL DISTURBED AREAS SHALL BE MULCHED WITH MATERIALS SPECIFIED BELOW PRIOR TO ANY STORM EVENT. ALL DISTURBED AREAS NOT FINAL GRADED WITHIN 14 DAYS SHALL BE MULCHED, AND AREAS WHICH HAVE BEEN TEMPORARILY OR PERMANENTLY SEEDED SHALL BE MULCHED IMMEDIATELY FOLLOWING SEEDING. EROSION CONTROL BLANKETS ARE RECOMMENDED TO BE USED AT THE BASE OF GRASSED WATERWAYS AND ON SLOPES GREATER THAN 15%. MULCH ANCHORING SHOULD BE USED ON SLOPES GREATER THAN 5% AFTER SEPTEMBER 15TH OF THE CONSTRUCTION YEAR (SEE WINTER EROSION CONTROL NOTES).
   TYPES OF MULCH:
   HAY OR STRAW: SHALL BE APPLIED AT A RATE OF 75 LBS/1,000 S.F. (1.5 TONS PER ACRE).
   EROSION CONTROL MIX: SHALL BE PLACED EVENLY AND MUST PROVIDE 100% SOIL COVERAGE. EROSION CONTROL MIX SHALL BE APPLIED SUCH THAT THE THICKNESS ON SLOPES 8:1 OR LESS IS 2 INCHES PLUS 1/2 INCH PER 20 FEET OF SLOPE UP TO 100 FEET. THE THICKNESS ON SLOPES BETWEEN 3:1 AND 2:1 SHALL BE 4 INCHES PLUS 1/2 INCH PER 20 FEET OF SLOPE UP TO 100 FEET. THIS SHALL NOT BE USED ON SLOPES GREATER THAN 2:1.
   EROSION CONTROL BLANKET: SHALL BE INSTALLED SUCH THAT CONTINUOUS CONTACT BETWEEN THE MAT AND THE SOIL IS OBTAINED. INSTALL BLANKETS AND STAPLE IN ACCORDANCE WITH THE MANUFACTURER'S RECOMMENDATIONS.

2. SOIL STOCKPILES:

   STOCKPILES OF SOIL OR SUBSOIL SHALL BE MULCHED WITH HAY OR STRAW AT A RATE OF 75 LBS/1,000 S.F. (1.5 TONS PER ACRE) OR WITH A FOUR-INCH LAYER OF WOOD WASTE EROSION CONTROL MIX. THIS WILL BE DONE WITHIN 24 HOURS OF STOCKING AND RE-ESTABLISHED PRIOR TO ANY RAINFALL. ANY SOIL STOCKPILE WILL NOT BE PLACED (EVEN COVERED WITH HAY OR STRAW) WITHIN 100 FEET FROM ANY NATURAL RESOURCES.

3. NATURAL RESOURCES PROTECTION:

   ANY AREAS WITHIN 100 FEET FROM ANY NATURAL RESOURCES, IF NOT STABILIZED WITH A MINIMUM OF 75% MATURE VEGETATION CATCH, SHALL BE MULCHED USING TEMPORARY MULCHING (AS DESCRIBED IN PART 1. OF THIS SECTION) WITHIN 7 DAYS OF EXPOSURE OR PRIOR TO ANY STORM EVENT. SEDIMENT BARRIERS (AS DESCRIBED IN PART 4. OF THIS SECTION) SHALL BE PLACED BETWEEN ANY NATURAL RESOURCE AND THE DISTURBED AREA.
   PROJECTS CROSSING THE NATURAL RESOURCE SHALL BE PROTECTED A MINIMUM DISTANCE OF 100 FEET ON EITHER SIDE FROM THE RESOURCE.

4. SEDIMENT BARRIERS:

   PRIOR TO THE BEGINNING OF ANY CONSTRUCTION, SEDIMENT BARRIERS SHALL BE STAKED ACROSS THE SLOPE(S), ON THE CONTOUR AT OR JUST BELOW THE LIMITS OF CLEARING OR GRUBBING, AND/OR JUST ABOVE ANY ADJACENT PROPERTY LINE OR WATERCOURSE TO PROTECT AGAINST CONSTRUCTION RELATED EROSION. SEDIMENT BARRIERS SHALL BE MAINTAINED BY THE CONTRACTOR UNTIL ALL EXPOSED SLOPES HAVE AT LEAST 85%-90% VIGOROUS PERENNIAL VEGETATIVE COVER TO PREVENT EROSION.

   SILT FENCE: SHALL BE INSTALLED PER THE DETAIL ON THE PLANS. THE EFFECTIVE HEIGHT OF THE FENCE SHALL NOT EXCEED 36 INCHES. IT IS RECOMMENDED THAT SILT FENCE BE REMOVED BY CUTTING THE FENCE MATERIALS AT GROUND LEVEL SO AS TO AVOID ADDITIONAL SOIL DISTURBANCE.

   HAY BALES: SHALL BE INSTALLED PER THE DETAIL ON THE PLANS. BALES SHALL BE WIRE-BOUND OR STRING-TIED AND THESE BINDINGS MUST REMAIN PARALLEL WITH THE GROUND SURFACE DURING INSTALLATION TO PREVENT DETERIORATION OF THE BINDINGS. BALES SHALL BE INSTALLED WITHIN A MINIMUM 4 INCH DEEP TRENCH LINE WITH ENDS OF ADJACENT BALES TIGHTLY ABUTTING ONE ANOTHER.

   EROSION CONTROL MIX: SHALL BE INSTALLED PER THE DETAIL ON THE PLANS. THE MIX SHALL CONSIST PRIMARILY OF ORGANIC MATERIAL AND CONTAIN A WELL-GRADED MIXTURE OF PARTICLE SIZES AND MAY CONTAIN ROCKS LESS THAN 4 INCHES IN DIAMETER. THE MIX COMPOSITION SHALL MEET THE STANDARDS DESCRIBED WITHIN THE MDEP BEST MANAGEMENT PRACTICES. NO TRENCHING IS REQUIRED FOR INSTALLATION OF THIS BARRIER.

   CONTINUOUS CONTAINED BERM: SHALL BE INSTALLED PER THE DETAIL ON THE PLANS. THIS SEDIMENT BARRIER IS EROSION CONTROL MIX PLACED WITHIN A SYNTHETIC TUBULAR NETTING AND PERFORMS AS A STURDY SEDIMENT BARRIER THAT WORKS WELL ON HARD GROUND SUCH AS FROZEN CONDITIONS, TRAVELED AREAS OR PAVEMENT. NO TRENCHING IS REQUIRED FOR INSTALLATION OF THIS BARRIER.

5. TEMPORARY CHECK DAMS:

   SHALL BE INSTALLED PER THE DETAIL ON THE PLANS. CHECK DAMS ARE TO BE PLACED WITHIN DITCHES/ SWALES AS SPECIFIED ON THE DESIGN PLANS IMMEDIATELY AFTER FINAL GRADING. CHECK DAMS SHALL BE 2 FEET HIGH. TEMPORARY CHECK DAMS MAY BE REMOVED ONLY AFTER THE ROADWAYS ARE PAVED AND THE VEGETATED SWALE ARE ESTABLISHED WITH AT LEAST 85%-90% OF VIGOROUS PERENNIAL GROWTH. THE AREA BENEATH THE CHECK DAM MUST BE SEEDED AND MULCHED IMMEDIATELY AFTER REMOVAL OF THE CHECK DAM.

   STONE CHECK DAMS: SHOULD BE CONSTRUCTED OF 2 TO 3 INCH STONE AND PLACED SUCH THAT COMPLETE COVERAGE OF THE SWALE IS OBTAINED AND THAT THE CENTER OF THE DAM IS 6 INCHES LOWER THAT THE OUTER EDGES.

   HAY BALE CHECK DAMS: WE DO NOT RECOMMEND THE USE OF HAY BALES AS CHECK DAMS.

   MANUFACTURED CHECK DAMS: MANUFACTURED CHECK DAMS, AS SPECIFIED IN THE DETAIL ON THE PLANS, MAY BE USED IF AUTHORIZED BY THE PROPER LOCAL, STATE OR FEDERAL REGULATING AGENCIES. THESE UNITS SHALL BE INSTALLED IN ACCORDANCE WITH THE MANUFACTURE'S RECOMMENDATIONS.

6. STORMDRAIN INLET PROTECTION:

   INLET PROTECTION SHALL BE PLACED AROUND A STORMDRAIN DROP INLETOR CURB INLET PRIOR TO PERMANENT STABILIZATION OF THE IMMEDIATE AND UPSTREAM DISTURBED AREAS. THEY SHALL BE CONSTRUCTED IN A MANNER THAT WILL FACILITATE CLEAN-OUT AND DISPOSAL OF TRAPPED SEDIMENTS AND MINIMIZE INTERFERENCE WITH CONSTRUCTION ACTIVITIES. ANY RESULTANT PONDING OF WATER FROM THE PROTECTION METHOD MUST NOT CAUSE EXCESSIVE INCONVENIENCE OR DAMAGE TO ADJACENT AREAS OR STRUCTURES.

   HAY BALE DROP INLET PROTECTION: WE DO NOT RECOMMEND THE USE OF HAY BALES AS INLET PROTECTION.

   CONCRETE BLOCK AND STONE INLET SEDIMENT FILTER (DROP OR CURB INLET): SHALL BE INSTALLED PER THE DETAIL ON THE PLANS. THE HEIGHT OF THE CONCRETE BLOCK BARRIER CAN VARY BUT MUST BE BETWEEN 12 AND 24 INCHES TALL. A MINIMUM OF 1 INCH CRUSHED STONE SHALL BE USED.

   MANUFACTURED SEDIMENT BARRIERS AND FILTER (DROP OR CURB INLET): MANUFACTURED FILTERS, AS SPECIFIED IN THE DETAIL ON THE PLANS, MAY BE USED IF INSTALLED IN ACCORDANCE WITH THE MANUFACTURER'S RECOMMENDATIONS.

7. STABILIZED CONSTRUCTION ENTRANCE/EXIT:

   PRIOR TO CLEARING AND/OR GRUBBING THE SITE A STABILIZED CONSTRUCTION ENTRANCE/EXIT SHALL BE CONSTRUCTED WHEREVER TRAFFIC WILL EXIT THE CONSTRUCTION SITE ONTO A PAVED ROADWAY IN ORDER TO MINIMIZE THE TRACKING OF SEDIMENT AND DEBRIS FROM THE CONSTRUCTION SITE ONTO PUBLIC ROADWAYS. THE ENTRANCES AND ADJACENT ROADWAY AREAS SHALL BE PERIODICALLY SWEPT OR WASHED TO FURTHER MINIMIZE THE TRACKING OF MUD, DUST OR DEBRIS FROM THE CONSTRUCTION AREA. STABILIZED CONSTRUCTION EXITS SHALL BE CONSTRUCTED IN AREAS SPECIFIED ON THE PLANS AND AS DETAILED ON THE PLANS.

8. DUST CONTROL:

   DUST CONTROL DURING CONSTRUCTION SHALL BE ACHIEVED BY THE USE OF A WATERING TRUCK TO PERIODICALLY SPRINKLE THE EXPOSED ROADWAY AREAS AS NECESSARY TO REDUCE DUST DURING THE DRY MONTHS. APPLYING OTHER DUST CONTROL PRODUCTS SUCH AS CALCIUM CHLORIDE OR OTHER MANUFACTURED PRODUCTS ARE ALLOWED IF AUTHORIZED BY THE PROPER LOCAL, STATE AND/OR FEDERAL REGULATING AGENCIES. HOWEVER, IT IS THE CONTRACTOR'S ULTIMATE RESPONSIBILITY TO MITIGATE DUST AND SOIL LOSS FROM THE SITE.

9. TEMPORARY VEGETATION:

   TEMPORARY VEGETATION SHALL BE APPLIED TO DISTURBED AREAS THAT WILL NOT RECEIVE FINAL GRADING FOR PERIODS UP TO 12 MONTHS. THIS PROCEDURE SHOULD BE USED EXTENSIVELY IN AREAS ADJACENT TO NATURAL RESOURCES. SEEDBED PREPARATION AND APPLICATION OF SEED SHALL BE CONDUCTED AS INDICATED IN THE PERMANENT VEGETATION SECTION OF THIS NARRATIVE. SPECIFIC SEEDS (FAST GROWING AND SHORT LIVING) SHALL BE SELECTED FROM THE MAINE EROSION AND SEDIMENT CONTROL BMP MANUAL DATED 3/2003 OR LATER. ALTERNATIVE EROSION CONTROL MEASURES SHOULD BE USED IF SEEDING CAN NOT BE DONE BEFORE SEPTEMBER 15TH OF THE CONSTRUCTION YEAR.

10. PERMANENT VEGETATION:

    REVEGETATION MEASURES SHALL COMMENCE IMMEDIATELY UPON COMPLETION OF FINAL GRADING OF AREAS TO BE LOAMED AND SEEDED. THE APPLICATION OF SEED SHALL BE CONDUCTED BETWEEN APRIL 1ST AND OCTOBER 1ST OF THE CONSTRUCTION YEAR, PLEASE REFER TO THE WINTER EROSION CONTROL NOTES FOR MORE DETAIL. REVEGETATION MEASURES SHALL CONSIST OF THE FOLLOWING:

SEEDBED PREPARATION:

A. FOUR (4) INCHES OF LOAM SHALL BE SPREAD OVER DISTURBED AREAS AND SMOOTHED TO A UNIFORM SURFACE. LOAM SHALL BE FREE OF SUBSOIL, CLAY LUMPS, STONES AND OTHER OBJECTS OVER 2 INCHES OR LARGER IN ANY DIMENSION, AND WITHOUT WEEDS, ROOTS OR OTHER OBJECTIONABLE MATERIAL.

B. SOILS TESTS SHALL BE TAKEN AT THE TIME OF SOIL STRIPPING TO DETERMINE FERTILIZATION REQUIREMENTS. SOILS TESTS SHALL BE TAKEN PROMPTLY AS TO NOT INTERFERE WITH THE 14-DAY LIMIT ON SOIL EXPOSURE. BASED UPON TEST RESULTS, SOIL AMENDMENTS SHALL BE INCORPORATED INTO THE SOIL PRIOR TO FINAL SEEDING. IN LIEU OF SOIL TESTS, SOIL AMENDMENTS MAY BE APPLIED AS FOLLOWS:

ITEM	APPLICATION RATE
10-20-20 FERTILIZER (N-P205-K20 OR EQUAL)	18.4 LBS./1,000 S.F.
GROUND LIMESTONE (50% CALCIUM & MAGNESIUM OXIDE)	138 LBS./1,000 S.F.

C. WORK LIME AND FERTILIZER INTO THE SOIL AS NEARLY AS PRACTICAL TO A DEPTH OF 4 INCHES WITH PROPER EQUIPMENT. ROLL THE AREA TO FIRM THE SEEDBED EXCEPT ON CLAY OR SILTY SOILS OR COARSE SAND.

APPLICATION OF SEED:

A. SEEDING: SHALL BE CONDUCTED BETWEEN APRIL 1ST AND OCTOBER 1ST OF THE CONSTRUCTION YEAR. GENERALLY A SEED MIXTURE MAY BE APPLIED AS FOLLOWS:

   MDOT SEEDING METHOD NO.1- PARK MIXTURE
   MDOT SEEDING METHOD NO.3- ROADSIDE MIXTURE NO.3

   NOTE: A SPECIFIC SEED MIXTURE SHOULD BE CHOSEN TO MATCH THE SOILS CONDITION OF THE SITE. VARIOUS AGENCIES CAN RECOMMEND SEED MIXTURES. MDEP RECOMMENDED SEED MIXTURES ARE IN THE EROSION AND SEDIMENT CONTROL BMP MANUAL DATED 3/2003 OR LATER.

B. HYDROSEEDING: SHALL BE CONDUCTED ON PREPARED AREAS WITH SLOPES LESS THAN 2:1. LIME AND FERTILIZER MAY BE APPLIED SIMULTANEOUSLY WITH THE SEED. RECOMMENDED SEEDING RATES MUST BE INCREASED BY 10% WHEN HYDROSEEDING.

C. MULCHING: SHALL COMMENCE IMMEDIATELY AFTER SEED IS APPLIED. REFER TO THE TEMPORARY MULCHING SECTION OF THIS NARRATIVE FOR DETAILS.

SODDING:

FOLLOWING SEEDBED PREPARATION, SOD CAN BE APPLIED IN LIEU OF SEEDING IN AREAS WHERE IMMEDIATE VEGETATION IS MOST BENEFICIAL SUCH AS DITCHES, AROUND STORMWATER DROP INLETS AND AREAS OF AESTHETIC VALUE. SOD SHOULD BE LAID AT RIGHT ANGLES TO THE DIRECTION OF FLOW, STARTING AT THE LOWEST ELEVATION. SOD SHOULD BE ROLLED OR TAMPED DOWN TO EVEN OUT THE JOINTS ONCE LAID DOWN. WHERE FLOW IS PREVALENT THE SOD MUST BE PROPERLY ANCHORED DOWN. IRRIGATE THE SOD IMMEDIATELY AFTER INSTALLATION. IN MOST CASES, SOD CAN BE ESTABLISHED BETWEEN APRIL 1ST AND NOVEMBER 15TH OF THE CONSTRUCTION YEAR, HOWEVER, REFER TO THE WINTER EROSION CONTROL NOTES FOR ANY ACTIVITIES AFTER OCTOBER 1ST.

TRENCH DEWATERING AND TEMPORARY STREAM DIVERSION:

WATER FROM CONSTRUCTION TRENCH DEWATERING OR TEMPORARY STREAM DIVERSION WILL PASS FIRST THROUGH A FILTER BAG OR SECONDARY CONTAINMENT STRUCTURE (E.G. HAY BALE LINED POOL) PRIOR TO DISCHARGE. THE DISCHARGE SITE SHALL BE SELECTED TO AVOID FLOODING AND SEDIMENT DISCHARGES TO A PROTECTED RESOURCE. IN NO CASE SHALL THE FILTER BAG OR CONTAINMENT STRUCTURE BE LOCATED WITHIN 100 FEET OF A PROTECTED NATURAL RESOURCE.

STANDARDS FOR TIMELY STABILIZATION:

STANDARD FOR THE TIMELY STABILIZATION OF DISTURBED SLOPES -- THE CONTRACTOR WILL CONSTRUCT AND STABILIZE STONE-COVERED SLOPES BY NOVEMBER 15. THE CONTRACTOR WILL SEED AND MULCH ALL SLOPES TO BE VEGETATED BY SEPTEMBER 15. THE MDEP WILL CONSIDER ANY AREA HAVING A GRADE GREATER THAN 15% (10H:1V) TO BE A SLOPE. IF THE CONTRACTOR FAILS TO STABILIZE ANY SLOPE TO BE VEGETATED BY SEPTEMBER 15, THEN THE CONTRACTOR WILL TAKE ONE OF THE FOLLOWING ACTIONS TO STABILIZE THE SLOPE FOR LATE FALL AND WINTER.

A. STABILIZE THE SOIL WITH TEMPORARY VEGETATION AND EROSION CONTROL MATS -- BY OCTOBER 1 THE CONTRACTOR WILL SEED THE DISTURBED SLOPE WITH WINTER RYE AT A SEEDING RATE OF 3 POUNDS PER 1,000 SQUARE FEET AND APPLY EROSION CONTROL MATS OVER THE MULCHED SLOPE. THE CONTRACTOR WILL MONITOR GROWTH OF THE RYE OVER THE NEXT 30 DAYS. IF THE RYE FAILS TO GROW AT LEAST THREE INCHES OR COVER AT LEAST 75% OF THE DISTURBED SOIL BEFORE NOVEMBER 15, THEN THE APPLICANT WILL MULCH THE AREA FOR OVER-WINTER PROTECTION AS DESCRIBED IN ITEM 3(C.) OF THIS STANDARD.
B. STABILIZE THE SLOPE WITH SOD -- THE CONTRACTOR WILL STABILIZE THE DISTURBED SLOPE WITH PROPERLY INSTALLED SOD BY OCTOBER 1. PROPER INSTALLATION INCLUDES THE APPLICANT PINNING THE SOD ONTO THE SLOPE WITH WIRE PINS, ROLLING THE SOD TO GUARANTEE CONTACT BETWEEN THE SOD AND UNDERLYING SOIL, AND WATERING THE SOD TO PROMOTE ROOT GROWTH INTO THE DISTURBED SOIL. THE APPLICANT WILL NOT USE LATE-SEASON SOD INSTALLATION TO STABILIZE SLOPES HAVING A GRADE GREATER THAN 33% (3H:1V).
C. STABILIZE THE SLOPE WITH WOOD WASTE COMPOST -- THE CONTRACTOR WILL PLACE A SIX-INCH LAYER OF WOOD WASTE COMPOST ON THE SLOPE BY NOVEMBER 15. PRIOR TO PLACING THE WOOD WASTE COMPOST, THE APPLICANT WILL REMOVE ANY SNOW ACCUMULATION ON THE DISTURBED SLOPE. THE APPLICANT WILL NOT USE WOOD WASTE COMPOST TO STABILIZE SLOPES HAVING GRADES GREATER THAN 50% (2H:1V) OR HAVING GROUNDWATER SEEPS ON THE SLOPE FACE.
D. STABILIZE THE SLOPE WITH STONE RIPRAP -- THE CONTRACTOR WILL PLACE A LAYER OF STONE RIPRAP ON THE SLOPE BY NOVEMBER 15. THE APPLICANT WILL HIRE A REGISTERED PROFESSIONAL ENGINEER TO DETERMINE THE STONE SIZE NEEDED FOR STABILITY AND TO DESIGN A FILTER LAYER FOR UNDERNEATH THE RIPRAP.

STANDARD FOR THE TIMELY STABILIZATION OF DISTURBED SOILS -- BY SEPTEMBER 15 THE CONTRACTOR WILL SEED AND MULCH ALL DISTURBED SOILS ON AREAS HAVING A SLOPE LESS THAN 15%. IF THE CONTRACTOR FAILS TO STABILIZE THESE SOILS BY THIS DATE, THEN THE CONTRACTOR WILL TAKE ONE OF THE FOLLOWING ACTIONS TO STABILIZE THE SOIL FOR LATE FALL AND WINTER.

A. STABILIZE THE SOIL WITH TEMPORARY VEGETATION -- BY OCTOBER 1 THE CONTRACTOR WILL SEED THE DISTURBED SOIL WITH WINTER RYE AT A SEEDING RATE OF 3 POUNDS PER 1000 SQUARE FEET, LIGHTLY MULCH THE SEEDED SOIL WITH HAY OR STRAW AT 75 POUNDS PER 1000 SQUARE FEET, AND ANCHOR THE MULCH WITH PLASTIC NETTING. THE APPLICANT WILL MONITOR GROWTH OF THE RYE OVER THE NEXT 30 DAYS. IF THE RYE FAILS TO GROW AT LEAST THREE INCHES OR COVER AT LEAST 75% OF THE DISTURBED SOIL BEFORE NOVEMBER 15, THEN THE APPLICANT WILL MULCH THE AREA FOR OVER-WINTER PROTECTION AS DESCRIBED IN ITEM 3(C.) OF THIS STANDARD.
B. STABILIZE THE SOIL WITH SOD -- THE APPLICANT WILL STABILIZE THE DISTURBED SOIL WITH PROPERLY INSTALLED SOD BY OCTOBER 1. PROPER INSTALLATION INCLUDES THE APPLICANT PINNING THE SOD ONTO THE SOIL WITH WIRE PINS, ROLLING THE SOD TO GUARANTEE CONTACT BETWEEN THE SOD AND UNDERLYING SOIL, AND WATERING THE SOD TO PROMOTE ROOT GROWTH INTO THE DISTURBED SOIL. THE APPLICANT WILL NOT USE LATE-SEASON SOD INSTALLATION TO STABILIZE SLOPES HAVING A GRADE GREATER THAN 33% (3H:1V).
C. STABILIZE THE SOIL WITH MULCH -- BY NOVEMBER 15 THE APPLICANT WILL MULCH THE DISTURBED SOIL BY SPREADING HAY OR STRAW AT A RATE OF AT LEAST 150 POUNDS PER 1000 SQUARE FEET ON THE AREA SO THAT NO SOIL IS VISIBLE THROUGH THE MULCH. PRIOR TO APPLYING THE MULCH, THE APPLICANT WILL REMOVE ANY SNOW ACCUMULATION ON THE DISTURBED AREA. IMMEDIATELY AFTER APPLYING THE MULCH, THE APPLICANT WILL ANCHOR THE MULCH WITH PLASTIC NETTING TO PREVENT WIND FROM MOVING THE MULCH OFF THE DISTURBED SOIL.

CONSTRUCTION SCHEDULE

SITE IMPROVEMENTS WILL MOST LIKELY BEGIN IN FALL 2018 DEPENDING UPON FINAL PROJECT APPROVAL. THE FOLLOWING SCHEDULE IS ANTICIPATED FOR THE CONSTRUCTION OF THE SITE IMPROVEMENTS.

SCHEDULE

1.	ESTIMATED CONSTRUCTION TIME:	8 MONTHS
2.	EROSION CONTROL MEASURES PLACED.	MONTH 1
3.	SITE CLEARING AND GRUBBING.	MONTH 1
4.	PLACEMENT & GRADING OF FILL	MONTH 1-3
5.	BUILDING CONSTRUCTION	MONTH 1-3
6.	STORMWATER MANAGEMENT AREA CONSTRUCTION.	MONTH 1-3
7.	UTILITY IMPROVEMENTS	MONTH 2-5
8.	PARKING BASE AND BINDER PAVEMENT	MONTH 2-5
9.	STABILIZE FOR WINTER	OCTOBER 15
10.	LANDSCAPING AND SEEDING	SPRING 2019
11.	CONSTRUCTION OF FINISH PAVEMENT	SPRING 2019
12.	FINAL SEEDING ON PREPARED AREAS. (DURING GROWING SEASON.)	MONTH 6 - MONTH 7
13.	BIWEEKLY MONITORING OF VEGETATIVE GROWTH.	MONTH 7 - MONTH 8
**	14. RE-SEEDING OF AREAS, IF NEEDED.	MONTH 8
**	15. REMOVAL OF EROSION CONTROL DEVICES.	UPON FINAL PROJECT COMPLETION AND STABILIZATION

** DATES ARE SUBJECT TO CHANGE, DEPENDING ON CONSTRUCTION PROGRESS.

HOUSEKEEPING: (CONT.)

C. FUGITIVE SEDIMENT AND DUST: ACTIONS MUST BE TAKEN TO INSURE THAT ACTIVITIES DO NOT RESULT IN NOTICEABLE EROSION OF SOILS OR FUGITIVE DUST EMISSIONS DURING OR AFTER CONSTRUCTION. OIL MAY NOT BE USED FOR DUST CONTROL.

D. DEBRIS AND OTHER MATERIALS: LITTER, CONSTRUCTION DEBRIS, AND CHEMICALS EXPOSED TO STORMWATER MUST BE PREVENTED FROM BECOMING A POLLUTANT SOURCE.

E. TRENCH DEWATERING: TRENCH DEWATERING IS THE REMOVAL OF WATER FROM TRENCHES, FOUNDATIONS, COFFERDAMS, PONDS, AND OTHER AREAS WITHIN THE CONSTRUCTION AREA THAT RETAIN WATER AFTER EXCAVATION. IN MOST CASES, THE COLLECTED WATER IS HEAVILY SILTED AND HINDERS CORRECT AND SAFE CONSTRUCTION PRACTICES. THE COLLECTED WATER MUST BE REMOVED FROM THE PONDED AREA, EITHER THROUGH GRAVITY OR PUMPING, AND MUST BE SPREAD THROUGH NATURAL WOODED BUFFERS OR REMOVED TO AREAS THAT ARE SPECIFICALLY DESIGNED TO COLLECT THE MAXIMUM AMOUNT OF SEDIMENT POSSIBLE, LIKE A COFFERDAM SEDIMENTATION BASIN. AVOID ALLOWING THE WATER TO FLOW OVER DISTURBED AREAS OF THE SITE. EQUIVALENT MEASURES MAY BE TAKEN IF APPROVED.

F. STORMWATER MANAGEMENT: THE CONTRACTOR IS RESPONSIBLE FOR MAINTENANCE AND INSPECTION OF ALL STORMWATER MANAGEMENT INFRASTRUCTURE DURING CONSTRUCTION. REFER TO THE INSPECTION, MAINTENANCE AND HOUSEKEEPING PLAN IN THE STORMWATER MANAGEMENT REPORT FOR SPECIFIC INSTRUCTIONS.

INSPECTIONS/MONITORING:

1. MAINTENANCE MEASURES SHALL BE APPLIED AS NEEDED DURING THE ENTIRE CONSTRUCTION CYCLE. AFTER EACH RAINFALL, SNOW STORM OR PERIOD OF THAWING AND RUNOFF, OR AT LEAST EVERY SEVEN (7) DAYS, THE CONTRACTOR SHALL PERFORM A VISUAL INSPECTION OF ALL INSTALLED EROSION CONTROL MEASURES. THE CONTRACTOR SHALL PERFORM REPAIRS AS NEEDED TO ALLOW CONTINUED PROPER FUNCTIONING OF THE EROSION CONTROL MEASURE. THE CONTRACTOR SHALL PROVIDE THE NECESSARY REGULATING AGENCIES WITH WRITTEN DOCUMENTATION DESCRIBING DATES OF INSPECTIONS AND NECESSARY FOLLOW-UP WORK TO MAINTAIN EROSION CONTROL MEASURES MEETING THE REQUIREMENTS OF THIS PLAN.

2. FOLLOWING THE TEMPORARY AND/OR FINAL SEEDINGS, THE CONTRACTOR SHALL INSPECT THE WORK AREA SEMIMONTHLY UNTIL THE SEEDINGS HAVE BEEN ESTABLISHED. ESTABLISHED MEANS A MINIMUM OF 85%-90% OF AREAS VEGETATED WITH VIGOROUS GROWTH. RESEEDING SHALL BE CARRIED OUT BY THE CONTRACTOR WITH FOLLOW-UP INSPECTIONS IN THE EVENT OF ANY FAILURES UNTIL VEGETATION IS ADEQUATELY ESTABLISHED.

HOUSEKEEPING:

A. SPILL PREVENTION: CONTROLS MUST BE USED TO PREVENT POLLUTANTS FROM BEING DISCHARGED FROM MATERIALS ON-SITE, INCLUDING STORAGE PRACTICES TO MINIMIZE EXPOSURE OF THE MATERIALS TO STORMWATER, AND APPROPRIATE SPILL PREVENTION, CONTAINMENT, AND RESPONSE PLANNING AND IMPLEMENTATION.

B. GROUNDWATER PROTECTION: DURING CONSTRUCTION, LIQUID PETROLEUM PRODUCTS AND OTHER HAZARDOUS MATERIALS WITH THE POTENTIAL TO CONTAMINATE GROUNDWATER MAY NOT BE STORED OR HANDLED IN AREAS OF THE SITE DRAINING TO AN INFILTRATION AREA. AN "INFILTRATION AREA" IS ANY AREA OF THE SITE THAT BY DESIGN OR AS A RESULT OF SOILS, TOPOGRAPHY AND OTHER RELEVANT FACTORS, ACCUMULATES RUNOFF THAT INFILTRATES INTO THE SOIL. DIKES, BERMS, SUMPS, AND OTHER FORMS OF SECONDARY CONTAINMENT THAT PREVENT DISCHARGE TO GROUNDWATER MAY BE USED TO ISOLATE PORTIONS OF THE SITE FOR THE PURPOSES OF STORAGE AND HANDLING OF THESE MATERIALS.

WINTER EROSION CONTROL MEASURES:

THE WINTER CONSTRUCTION PERIOD IS FROM OCTOBER 1 THROUGH APRIL 15. IF THE CONSTRUCTION SITE IS NOT STABILIZED BY PAVEMENT, A ROAD GRAVEL BASE, 75% MATURE VEGETATION COVER OR RIPRAP BY NOVEMBER 15 THEN THE SITE NEEDS TO BE PROTECTED WITH OVER-WINTER STABILIZATION. AN AREA CONSIDERED OPEN IS ANY AREA NOT STABILIZED WITH PAVEMENT, VEGETATION, MULCHING, EROSION CONTROL MATS, RIPRAP OR GRAVEL BASE ON A ROAD.
WINTER EXCAVATION AND EARTHWORK SHALL BE COMPLETED SUCH THAT NO MORE THAN 1 ACRE OF THE SITE IS WITHOUT STABILIZATION AT ANY ONE TIME. LIMIT THE EXPOSED AREA TO THOSE AREAS IN WHICH WORK IS EXPECTED TO BE UNDER TAKEN DURING THE PROCEEDING 15 DAYS AND THAT CAN BE MULCHED IN ONE DAY PRIOR TO ANY SNOW EVENT. ALL AREAS CONSIDERED TO BE DENUDED UNTIL THE SUBBASE GRAVEL IS INSTALLED IN ROADWAY AREAS OR THE AREAS OF FUTURE LOAM AND SEED HAVE BEEN LOAMED, SEEDED AND MULCHED. HAY AND STRAW MULCH RATE SHALL BE A MINIMUM OF 150 LBS./1,000 S.F. (3 TONS/ACRE) AND SHALL BE PROPERLY ANCHORED.
THE CONTRACTOR MUST INSTALL ANY ADDED MEASURES WHICH MAY BE NECESSARY TO CONTROL EROSION/SEDIMENTATION FROM THE SITE DEPENDENT UPON THE ACTUAL SITE AND WEATHER CONDITIONS.
CONTINUATION OF EARTHWORK OPERATIONS ON ADDITIONAL AREAS SHALL NOT BEGIN UNTIL THE EXPOSED SOIL SURFACE ON THE AREA BEING WORK

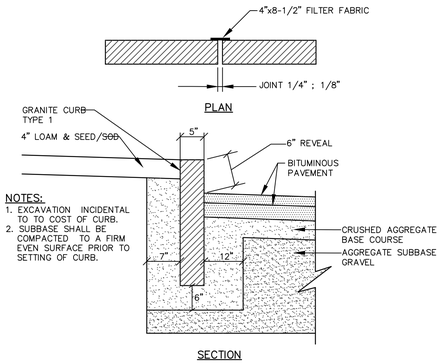

NOTES:
1. EXCAVATION INCIDENTAL TO TO COST OF CURB.
2. SUBBASE SHALL BE COMPACTED TO A FIRM EVEN SURFACE PRIOR TO SETTING OF CURB.

VERTICAL GRANITE CURB
(BID ALTERNATE NO.2)

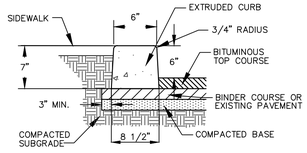

NOTE:
USE SLOPED MOLD WHEREVER CURB ABUTS LANDSCAPE AREAS.

SLIPFORM CONCRETE CURB
NOT TO SCALE

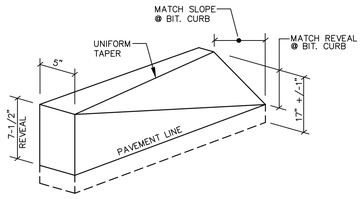

VERTICAL TO SLOPED CURB TRANSITION STONES
NOT TO SCALE

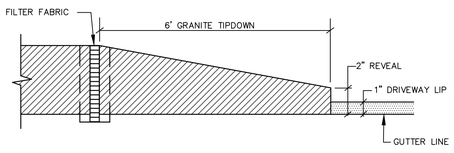

TYPICAL TIPDOWN CURB INSTALLATION
NOT TO SCALE

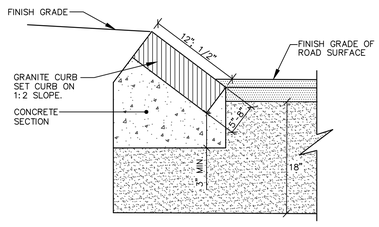

NOTE: REUSE EXISTING GRANITE CURB WHEN POSSIBLE

SLOPED GRANITE CURB (6x12)
NOT TO SCALE

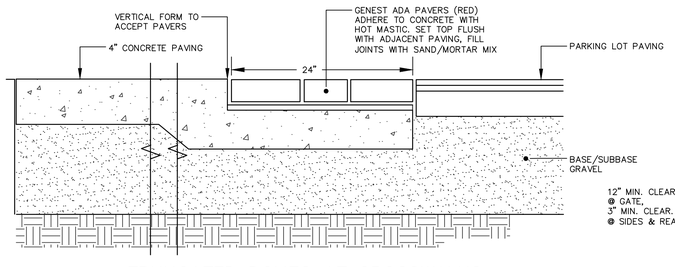

TRUNCATED DOMES AT CROSSWALKS
NOT TO SCALE

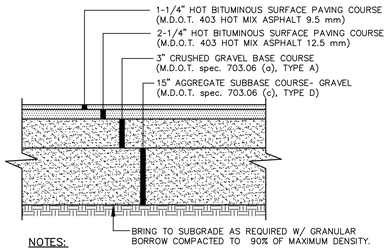

NOTES:
1. COMPACT GRAVEL SUBBASE, BASE COURSE TO 92% OF MAXIMUM DENSITY USING HEAVY ROLLER COMPACTION.
2. CONTRACTOR SHALL SET GRADE STAKES MARKING SUBBASE AND FINISH GRADE ELEVATIONS FOR CONSTRUCTION REFERENCE.

TYP. PAVED PARKING LOT/DRIVEWAY SECTION
NOT TO SCALE

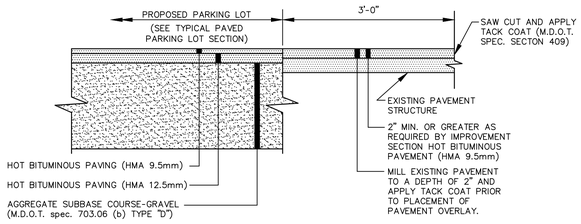

TYPICAL PAVEMENT JOINT
NOT TO SCALE

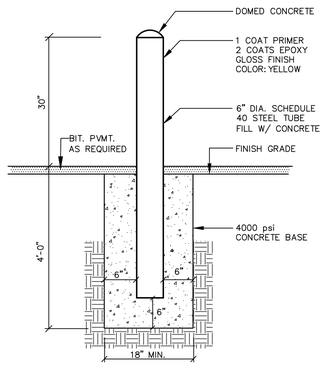

METAL BOLLARD
NOT TO SCALE

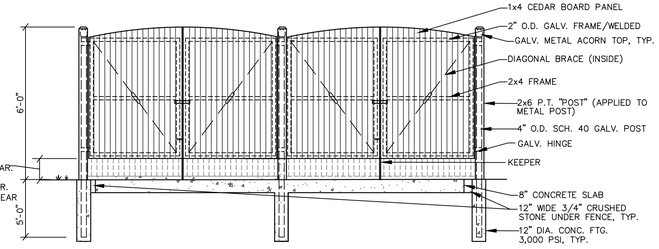

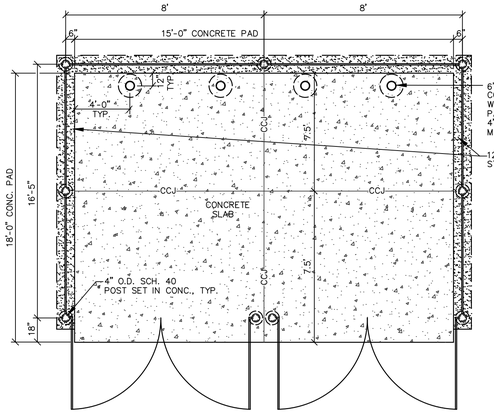

TYPICAL DUMPSTER ENCLOSURE
NOT TO SCALE

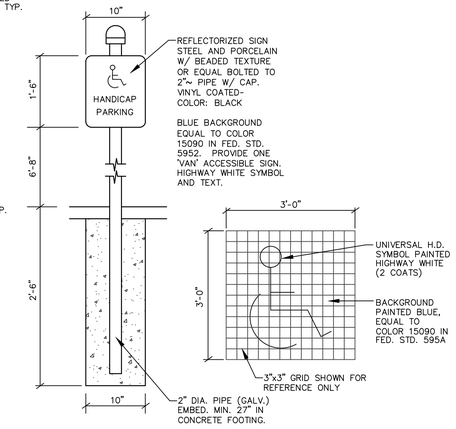

HANDICAP SIGNS
NOT TO SCALE

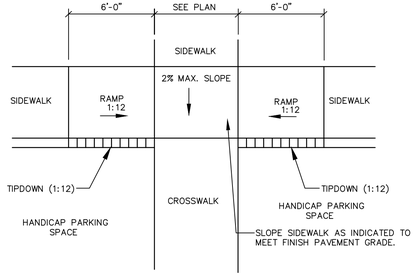

HANDICAP RAMPS
NOT TO SCALE

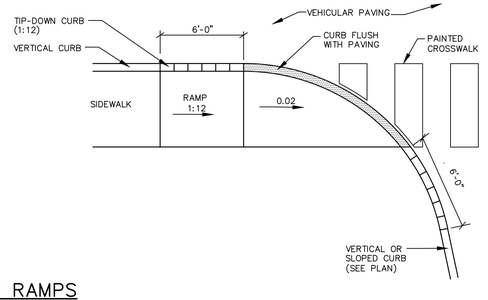

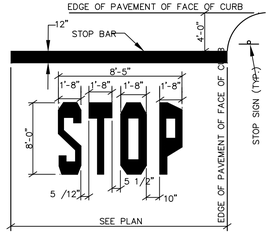

NOTE:
1. WORDS AND ARROWS FOR DRIVEWAYS SHALL BE APPLIED ACCORDING TO REQUIREMENTS AS OUTLINED IN SECTION 3B OF THE MANUAL ON UNIFORM TRAFFIC CONTROL DEVICES FOR STREETS AND HIGHWAYS.

2. THESE WORDS AND BAR ARE TO BE PAINTED REFLECTIVE WHITE.

STOP BAR
NOT TO SCALE

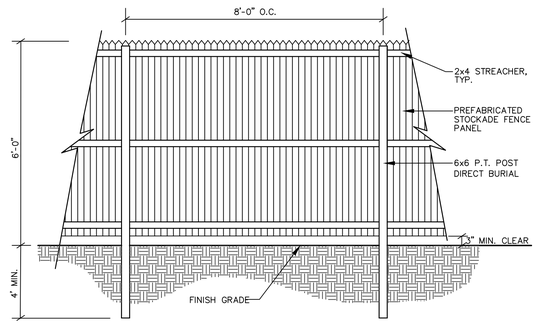

STOCKADE FENCE
NOT TO SCALE

JAMES R. SEYMOUR, PE 9984

STATE OF MAINE — JAMES R. SEYMOUR — No. 9984 — REGISTERED PROFESSIONAL ENGINEER — 04-18-19

DESIGNED	CHECKED
SAH	RLM

REV	BY:	DATE:	STATUS
A	RLM	09-10-18	SUBMIT TO CITY OF PORTLAND
B	JRS	04-18-19	RESPONSE TO CITY COMMENTS
C	JRS	08-28-19	REVISE PLANS FOR FINAL CITY APPROVAL

© COPYRIGHT 2019 SEBAGO TECHNICS, INC. ANY ALTERATIONS, REVISIONS OR OTHERWISE, SHALL BE AT THE USER'S SOLE RISK AND WITHOUT LIABILITY TO SEBAGO TECHNICS, INC. AUTHORIZED BY WRITTEN PERMISSION FROM SEBAGO TECHNICS, INC. ANY

SEBAGO TECHNICS
WWW.SEBAGOTECHNICS.COM
75 John Roberts Rd.
Suite 4A
South Portland, ME 04106
Tel: 207-200-2100

DETAILS
OF:
PINE STATE FAMILY MART
1884 FOREST AVENUE
PORTLAND, MAINE 04103
FOR:
JOHN CHAU
75 ARCADIA ST.
PORTLAND, MAINE 04103

PROJECT NO.	SCALE
11142	NTS

SHEET 7 OF 9

11142D.dwg, TAB:02

SUBSURFACE SAND FILTER SECTION TABLE					
NAME	CHAMBER	CHAMBER BOTTOM ELEV.=A	UNDERDRAIN OUTLET ELEV.=B	ISOLATOR ROW(S) INLET PIPE ELEV.=C	OVERFLOW OUTLET PIPE ELEV.=D
SSSF #1	DC-780	73.68	70.10	73.68	75.12

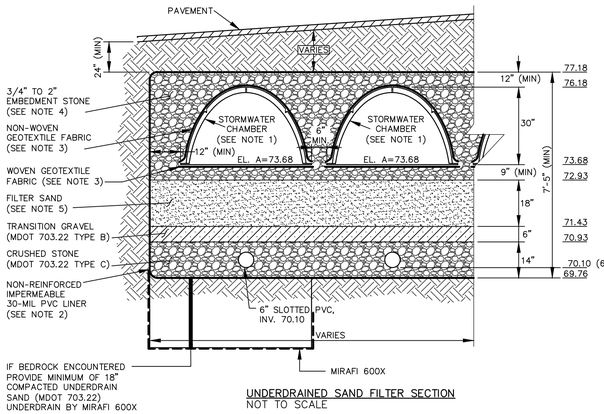

UNDERDRAINED SAND FILTER SECTION
NOT TO SCALE

SUBSURFACE UNDERDRAINED SAND FILTER NOTES:

1. THE STORMWATER CHAMBER SHALL BE A STORMTECH DC-780 OR EQUIVALENT SUBSURFACE STORAGE CHAMBER APPROVED BY THE ENGINEER.
2. THE ENTIRE SUBSURFACE SYSTEM, INCLUDING THE CRUSHED STONE STORAGE VOLUME, THE FILTER MEDIA, AND UNDERDRAIN MATERIALS, SHALL BE WRAPPED IN AN NON-REIFORCED IMPERMEABLE 30-MIL PVC LINER.
3. A STRIP OF WOVEN GEOTEXTILE THAT MEETS AASHTO M288 CLASS ONE REQUIREMENTS (MIRAFI FW404 OR EQUIVALENT) MUST BE PLACED BETWEEN THE BOTTOM OF THE CHAMBER AND ITS STONE FOUNDATION. THIS FABRIC TRAPS SEDIMENTS AND PROTECTS THE UNDERLYING CRUSHED STONE. A SECOND STRIP OF NON-WOVEN AASHTO M288 CLASS 2 GEOTEXTILE (MIRAFI 160N OR EQUIVALENT) SHALL BE DRAPED OVER THE ENTIRE LENGTH OF THE CHAMBERS. THIS FABRIC WILL ALSO TRAP SEDIMENTS AND PROVIDE SEPARATION BETWEEN THE CHAMBERS AND SURROUNDING STONE.
4. THE EMBEDMENT STONE SURROUNDING THE CHAMBERS SHALL BE A WASHED, ANGULAR STONE WITH THE MAJORITY OF PARTICLES BETWEEN 3/4 INCH AND 2 INCH. THE BOTTOM 6 INCH LAYER OF STONE THAT ACTS AS THE FOUNDATION BELOW THE CHAMBERS SHALL BE COMPACTED TO ACHIEVE A 95% STANDARD PROCTOR DENSITY.
5. THE SAND FILTER MATERIAL SHALL BE A UNIFORM MIX, FREE OF STONES LARGER THAN 2 INCHES, STUMPS, ROOTS, OR OTHER SIMILAR OBJECTS. THE MATERIAL SHALL MEET THE SPECIFICATIONS FOR MDOT AGGREGATE SAND (MDOT #703.01). HOWEVER, THIS AGGREGATE SAND SHALL BE MIXED WITH LOAM TO ACHIEVE A MATERIAL WITH BETWEEN 8% AND 10% PASSING THE #200 SIEVE. THE LOAM USED IN THIS MIXTURE SHALL HAVE A MINIMAL CLAY CONTENT. THIS 18 INCH LAYER OF SAND FILTRATION MEDIA SHALL BE PLACED TO ACHIEVE A LEVEL OF COMPACTION BETWEEN 92% AND 95% STANDARD PROCTOR DENSITY.

CONSTRUCTION OVERSIGHT NOTES FOR SUBSURFACE SAND FILER:

1. INSPECTIONS BY A PROFESSIONAL ENGINEER SHALL CONSIST OF WEEKLY VISITS TO THE SITE TO INSPECT THE CONSTRUCTION AND STABILIZATION OF THE PROPOSED SUBSURFACE CHAMBERS AND ITS FILTER COURSE MATERIAL TO BE BUILT ON THE SITE. INSPECTIONS SHALL CONSIST OF AN APPROPRIATE NUMBER OF VISITS TO THE SITE TO INSPECT THE INSTALLATION OF THE SUBGRADE, FILTER BED MATERIAL PLACEMENT, INSTALLATION OF STONE, ISOLATOR ROW AND CHAMBER, SURROUNDING STONE, FABRIC LAYMENT AND STORMWATER OVERFLOW BYPASS CONSTRUCTION FROM INITIAL GROUND DISTURBANCE TO FINAL PAVER PLACEMENT.

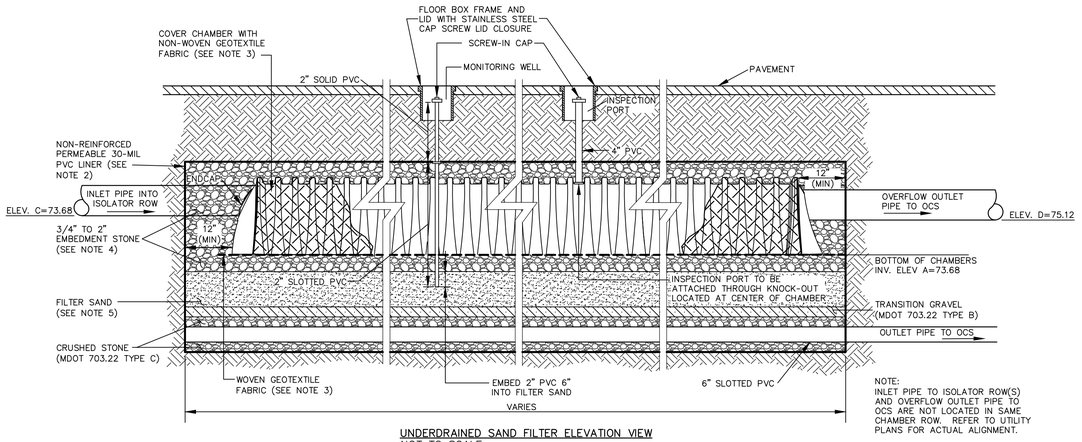

NOTE:
INLET PIPE TO ISOLATOR ROW(S) AND OVERFLOW OUTLET PIPE TO OCS ARE NOT LOCATED IN SAME CHAMBER ROW. REFER TO UTILITY PLANS FOR ACTUAL ALIGNMENT.

UNDERDRAINED SAND FILTER ELEVATION VIEW
NOT TO SCALE

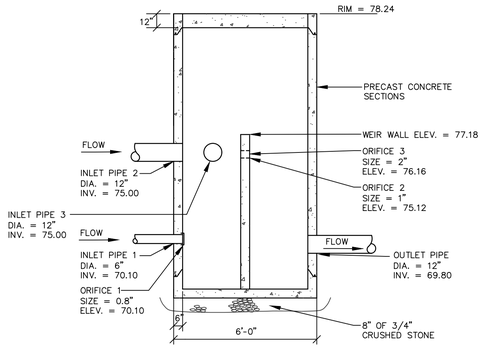

	OCS-1
OUTLET PIPE	
DIA=A	12"
ELEV.=B	70.00
INLET PIPE 1	
DIA=C	6"
ELEV.=D	70.10
INLET PIPE 2	
DIA=E	12"
ELEV.=F	75.00
INLET PIPE 3	
DIA=E	12"
ELEV.=F	75.00
WEIR WALL	
ELEV.=K	76.65
RIM	
ELEV.=L	78.24

OUTLET CONTROL ELEVATION SCHEDULE

6'ø OUTLET CONTROL STRUCTURE/VAULT
NOT TO SCALE

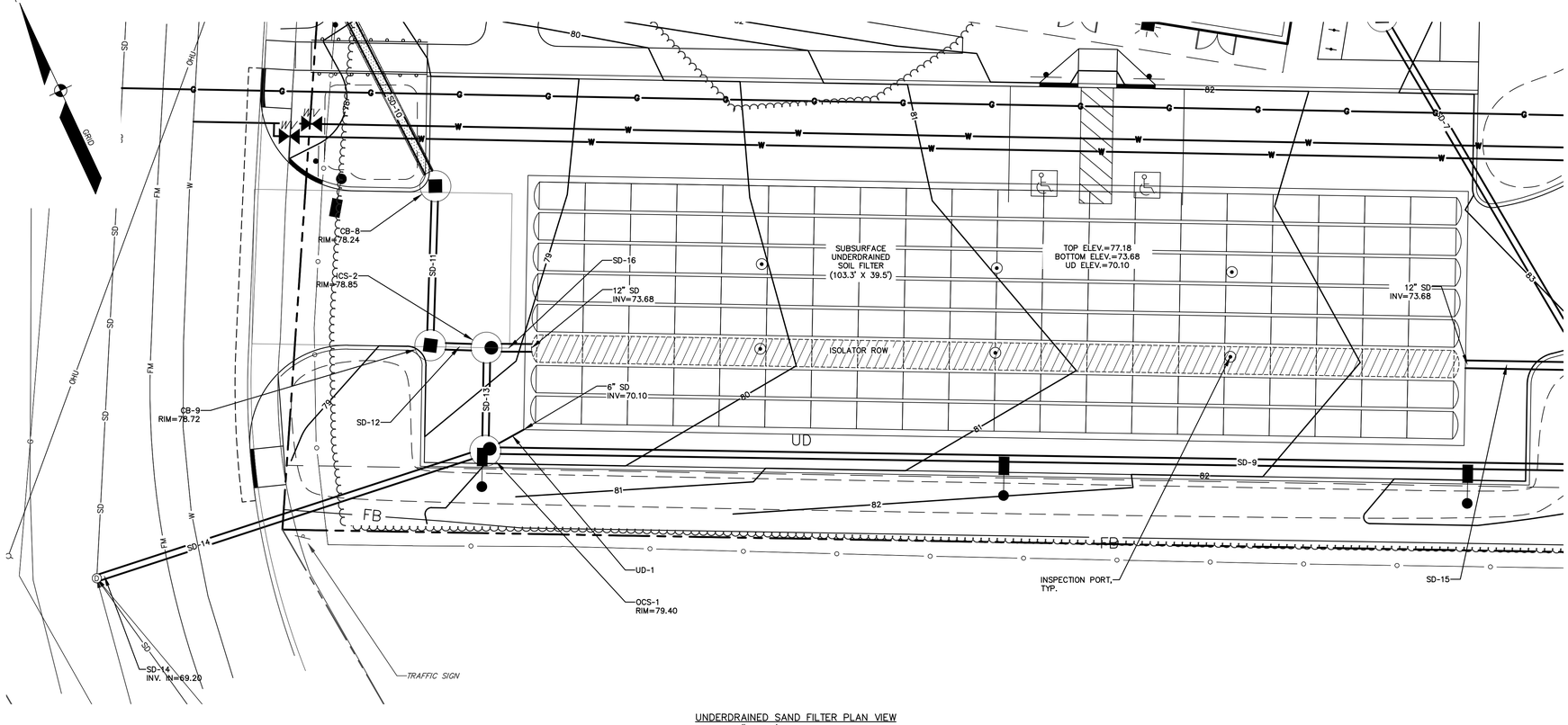

UNDERDRAINED SAND FILTER PLAN VIEW
SCALE: 1" = 10'

JAMES R. SEYMOUR, PE 9984

STATE OF MAINE — JAMES R. SEYMOUR No. 9984 — REGISTERED PROFESSIONAL ENGINEER — 04-18-19

DESIGNED	CHECKED
SAH	RLM

REV.	BY:	DATE:	
C	JRS	08-28-19	REVISE PLANS FOR FINAL CITY APPROVAL
B	JRS	04-18-19	RESPONSE TO CITY COMMENTS
A	RLM	09-10-18	SUBMIT TO CITY OF PORTLAND

STATUS: DATE:

© COPYRIGHT BY SEBAGO TECHNICS, INC. ANY ALTERATIONS, REVISIONS OR ADDITIONS TO THIS DRAWING SHALL BE AT THE USER'S SOLE RISK AND WITHOUT LIABILITY TO SEBAGO TECHNICS, INC. AND UNLESS OTHERWISE AGREED TO IN WRITING BY SEBAGO TECHNICS, INC., SHALL OBLIGATE THE USER TO INDEMNIFY AND HOLD HARMLESS SEBAGO TECHNICS, INC. FROM ANY CLAIMS, LOSSES, DAMAGES, LIABILITIES OR EXPENSES ARISING OUT OF ANY USE, REUSE OR MODIFICATION OF THIS DRAWING. ALL DRAWINGS ARE CONSIDERED INSTRUMENTS OF SERVICE AND SHALL REMAIN THE PROPERTY OF SEBAGO TECHNICS, INC. UNLESS OTHERWISE AGREED TO IN WRITING BY SEBAGO TECHNICS, INC. ALL DRAWINGS ARE NOT TO BE USED FOR ANY PURPOSE OR PROJECT OTHER THAN THE SPECIFIC PROJECT FOR WHICH THEY HAVE BEEN PREPARED WITHOUT THE EXPRESS WRITTEN PERMISSION FROM SEBAGO TECHNICS, INC. ANY ALTERATIONS, REVISIONS OR ADDITIONS TO THIS DRAWING SHALL BE AT THE USER'S SOLE RISK AND WITHOUT LIABILITY TO SEBAGO TECHNICS, INC. AND UNLESS OTHERWISE AGREED TO IN WRITING BY SEBAGO TECHNICS, INC., SHALL OBLIGATE THE USER TO INDEMNIFY AND HOLD HARMLESS SEBAGO TECHNICS, INC. FROM ANY CLAIMS, LOSSES, DAMAGES, LIABILITIES OR EXPENSES ARISING OUT OF ANY USE, REUSE OR MODIFICATION OF THIS DRAWING. ALL DRAWINGS ARE CONSIDERED INSTRUMENTS OF SERVICE AND SHALL REMAIN THE PROPERTY OF SEBAGO TECHNICS, INC. UNLESS OTHERWISE AGREED TO IN WRITING BY SEBAGO TECHNICS, INC. ALL DRAWINGS ARE NOT TO BE USED FOR ANY PURPOSE OR PROJECT OTHER THAN THE SPECIFIC PROJECT FOR WHICH THEY HAVE BEEN PREPARED WITHOUT THE EXPRESS WRITTEN PERMISSION FROM SEBAGO TECHNICS, INC.

SEBAGO TECHNICS
WWW.SEBAGOTECHNICS.COM
75 John Roberts Rd.
Suite 4A
South Portland, ME 04106
Tel: 207-200-2100

DETAILS
OF:
PINE STATE FAMILY MART
1884 FOREST AVENUE
PORTLAND, MAINE 04103
FOR:
JOHN CHAU
75 ARCADIA ST.
PORTLAND, MAINE 04103

PROJECT NO.	SCALE
11142	NTS

SHEET 9 OF 9

111420.dwg, TAB:D4

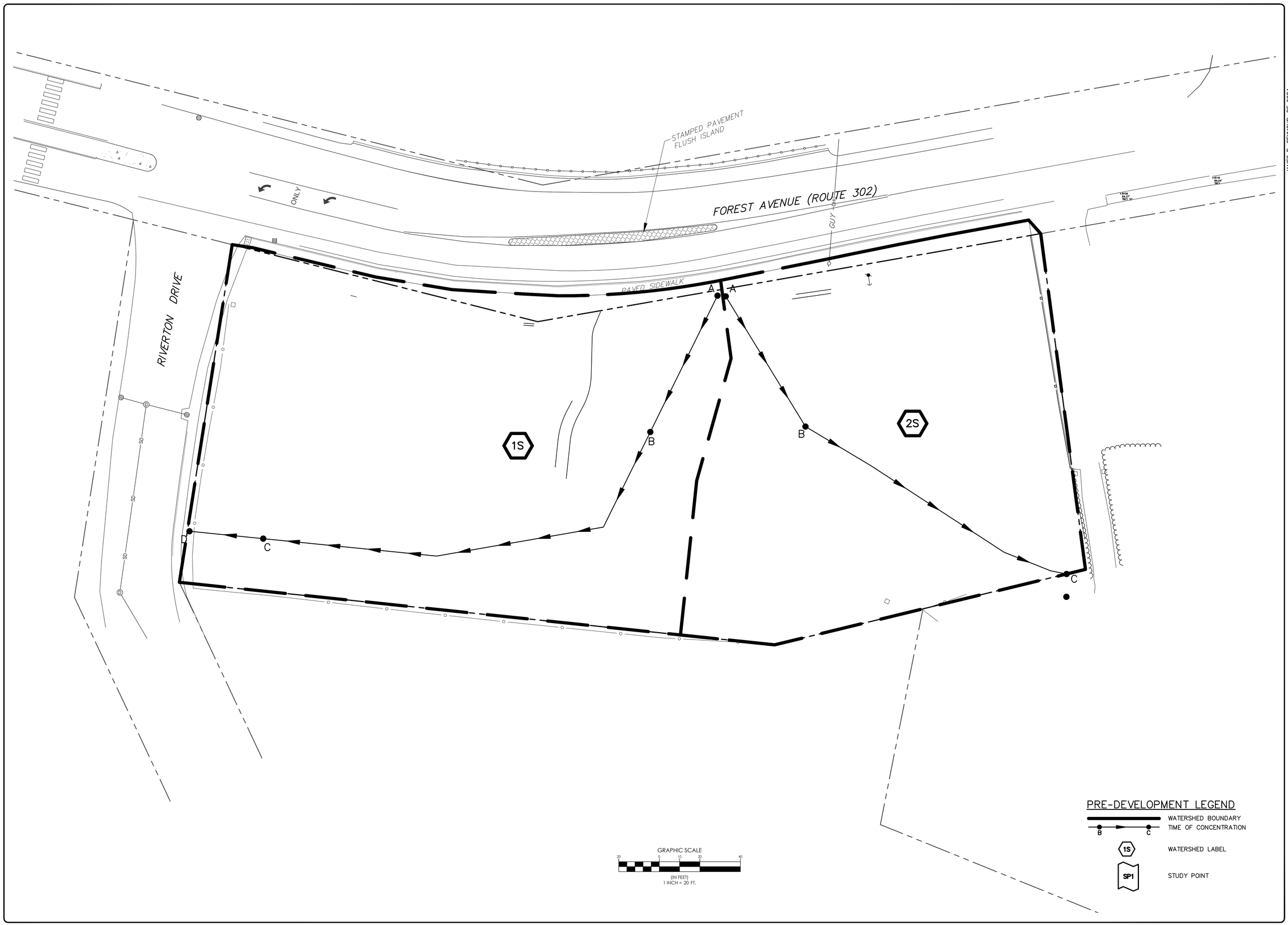

JAMES R. SEYMOUR, PE 9984

STATE OF MAINE — JAMES R. SEYMOUR No. 9984 — REGISTERED PROFESSIONAL ENGINEER — 04-18-19

DESIGNED	CHECKED
SAH	RLM

REV.	BY:	DATE:	STATUS
C	JRS	08-28-19	REVISE PLANS FOR FINAL CITY APPROVAL
B	JRS	04-18-19	RESPONSE TO CITY COMMENTS
A	RLM	9-10-18	SUBMIT TO CITY OF PORTLAND

THESE PLANS ARE NOT TO BE USED OR REPRODUCED WITHOUT WRITTEN PERMISSION FROM SEBAGO TECHNICS, INC. ANY ALTERATIONS, AUTHORIZED OR OTHERWISE, SHALL BE AT THE USER'S SOLE RISK AND WITHOUT LIABILITY TO SEBAGO TECHNICS, INC.

SEBAGO TECHNICS
WWW.SEBAGOTECHNICS.COM
75 John Roberts Rd.
Suite 4A
South Portland, ME 04106
Tel: 207-200-2100

PRE-DEVELOPMENT WATERSHED PLAN

OF:
PINE STATE FAMILY MART
1884 FOREST AVENUE
PORTLAND, MAINE 04103

FOR:
JOHN CHAU
75 ARCADIA ST.
PORTLAND, MAINE 04103

PROJECT NO.	SCALE
11142	1" =20'

SHEET 1 OF 2

11142SWP.dwg, TAB:PRE

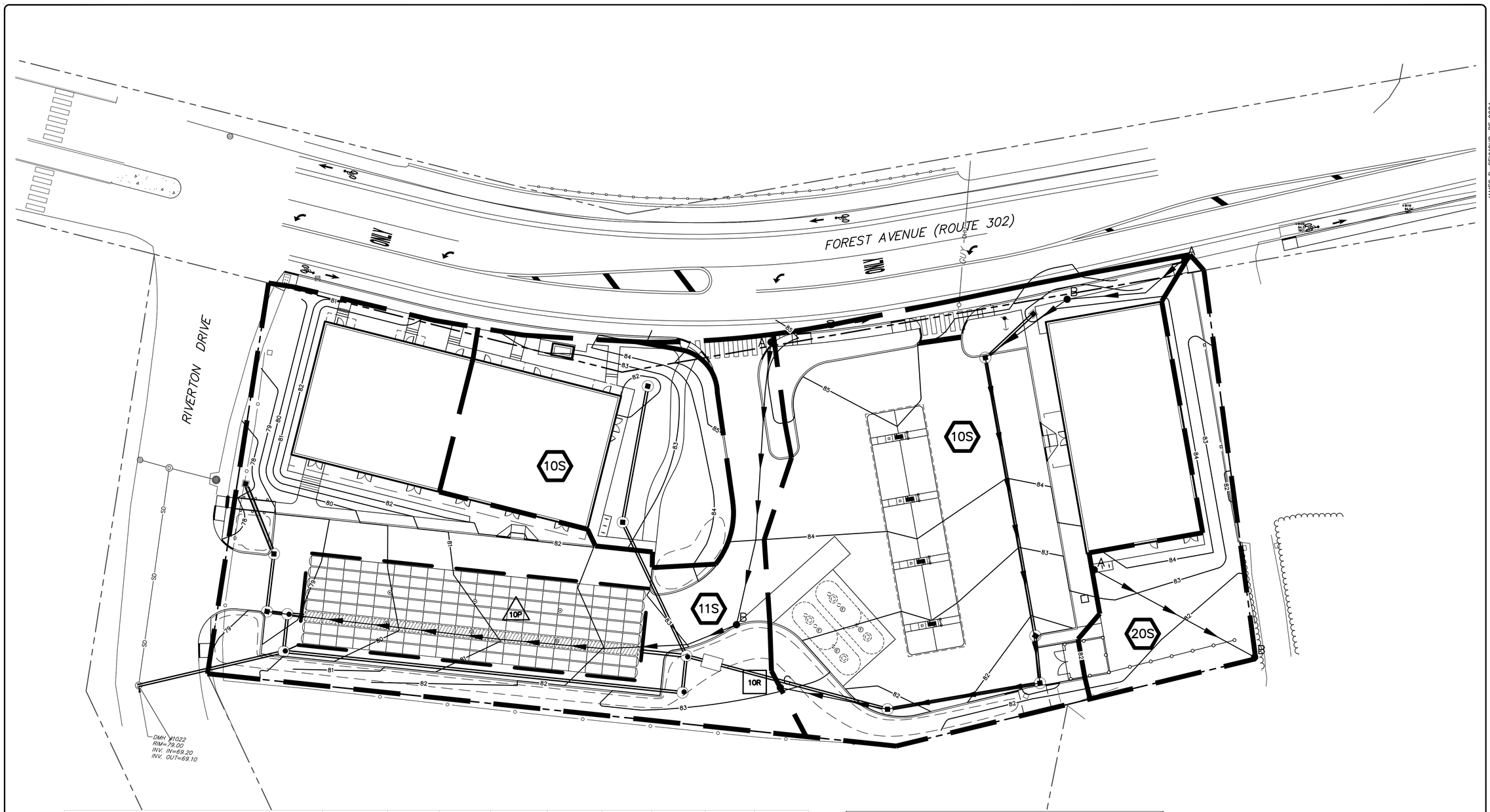

Table 1: MDEP GENERAL STANDARD CALCULATIONS

Job # 11142 Pine State Family Mart

AREA ID	WATERSHED SIZE (S.F.)	EXISTING ONSITE IMPERVIOUS AREA TO REMAIN (S.F.)	NEW ONSITE IMPERVIOUS AREA (S.F.)	EXISTING ONSITE LANDSCAPED AREA TO REMAIN (S.F.)	NEW ONSITE LANDSCAPED AREA (S.F.)	NET NEW DEVELOPED AREA (S.F.)	NET EXISTING DEVELOPED AREAS (S.F.)	TREATMENT PROVIDED?	IMPERVIOUS AREA TREATED (S.F.)	LANDSCAPED AREA TREATED* (S.F.)	DEVELOPED AREA TREATED (S.F.)	TREATMENT BMP
10 &11	66,349	147	48,403	2,101	15,698	64,101		YES	48,550	17,799	66,349	SSSF1
20	7,500	296	300	475	4,930	5,230		NO	0	0	0	
TOTAL (S.F.)	**73,849**	**443**	**48,703**	**2,576**	**20,628**	**69,331**	**0**		**48,550**	**17,799**	**66,349**	

TOTAL NEW IMPERVIOUS AREA (S.F.)	**48,703**	**TOTAL DEVELOPED AREA (S.F.)**	**69,331**
TOTAL IMPERVIOUS AREA RECEIVING TREATMENT (S.F.)	**48,550**	**TOTAL DEV. AREA RECEIVING TREATMENT (S.F.)**	**66,349**
% OF IMPERVIOUS AREA RECEIVING TREATMENT	**99.69%**	**% OF DEV. AREA RECEIVING TREATMENT**	**95.70%**

Stormwater Peak Runoff Summary Table			
Study Point	**Storm Event**	**Pre-Development (cfs)**	**Post-Development (cfs)**
SP-1	2-year	0.00	0.00
	10-year	0.00	0.01
	25-year	0.02	0.03
SP-2	2-year	0.00	0.00
	10-year	0.00	0.00
	25-year	0.01	0.00

GRAPHIC SCALE
20 0 10 20 40
(IN FEET)
1 INCH = 20 FT.

POST-DEVELOPMENT LEGEND

- WATERSHED BOUNDARY
- TIME OF CONCENTRATION (B → C)
- 10S — WATERSHED LABEL
- SP1 — STUDY POINT
- 10P — STORMWATER TREATMENT/DETENTION POND
- 10R — REACH

JAMES R. SEYMOUR, PE 9984

STATE OF MAINE — JAMES R. SEYMOUR No. 9984 — REGISTERED PROFESSIONAL ENGINEER — 04-18-19

DESIGNED	CHECKED
SAH	RLM

REV:	BY:	DATE:	STATUS
C	JRS	08-28-19	REVISE PLANS FOR FINAL CITY APPROVAL
B	JRS	04-18-19	RESPONSE TO CITY COMMENTS
A	RLM	9-10-18	SUBMIT TO CITY OF PORTLAND

THIS PLAN MAY NOT BE USED OR ALTERED WITHOUT WRITTEN PERMISSION FROM SEBAGO TECHNICS, INC. ANY ALTERATIONS, AUTHORIZED OR OTHERWISE, SHALL BE AT THE USER'S SOLE RISK AND WITHOUT LIABILITY TO SEBAGO TECHNICS, INC.

SEBAGO TECHNICS
WWW.SEBAGOTECHNICS.COM
75 John Roberts Rd.
Suite 4A
South Portland, ME 04106
Tel: 207-200-2100

POST-DEVELOPMENT WATERSHED PLAN

OF:
PINE STATE FAMILY MART
1884 FOREST AVENUE
PORTLAND, MAINE 04103

FOR:
JOHN CHAU
75 ARCADIA ST.
PORTLAND, MAINE 04103

PROJECT NO.	SCALE
11142	1" =20'

SHEET 2 OF 2

11142SWP.dwg, TAB:POST1

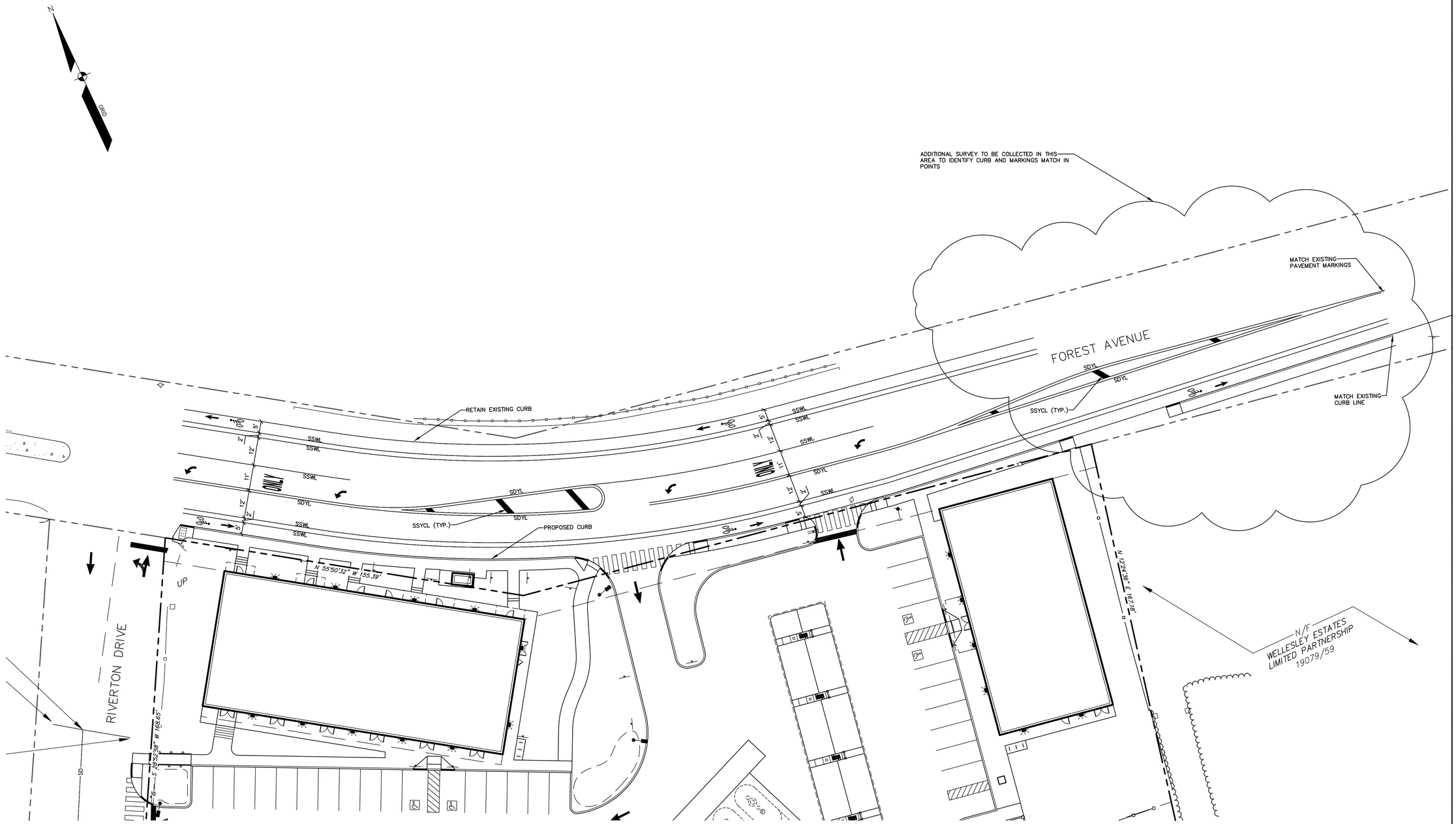

PAVEMENT MARKINGS LEGEND:

SDYL - SOLID DOUBLE YELLOW LINE
SSWL - SOLID SINGLE WHITE LINE
SSYCL - SOLID SINGLE YELLOW CHEVRON LINE

GRAPHIC SCALE
20 0 10 20 40
(IN FEET)
1 INCH = 20 FT.

NOT FOR CONSTRUCTION

NOT FOR CONSTRUCTION

DESIGNED	CHECKED
CMT	DHC

REV.	BY:	DATE:	STATUS:
1	DHC	09/11/19	CONCEPT PLAN FOR REVIEW AND APPROVAL

THIS PLAN SHALL NOT BE MODIFIED WITHOUT WRITTEN PERMISSION FROM SEBAGO TECHNICS, INC. ANY ALTERATIONS, AUTHORIZED OR OTHERWISE, SHALL BE AT THE USER'S SOLE RISK AND WITHOUT LIABILITY TO SEBAGO TECHNICS, INC.

SEBAGO TECHNICS
WWW.SEBAGOTECHNICS.COM
75 John Roberts Rd.
Suite 4A
South Portland, ME 04106
Tel. 207-200-2100

CONCEPT OFFSITE IMPROVEMENT PLAN
OF:
PINE STATE FAMILY MART
1884 FOREST AVENUE
PORTLAND, MAINE 04103
FOR:
JOHN CHAU
75 ARCADIA ST.
PORTLAND, MAINE 04103

PROJECT NO.	SCALE
11142	1"=20'

SHEET 1 OF 1

11142Offsite5.dwg, TAB: S

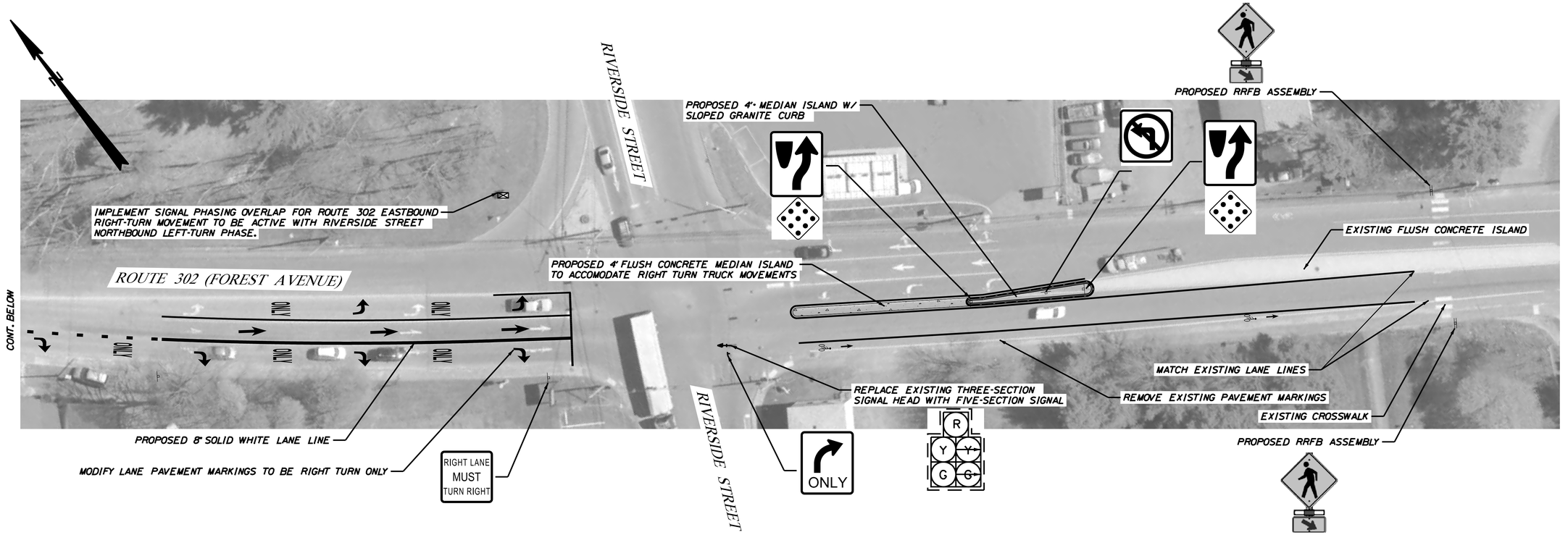

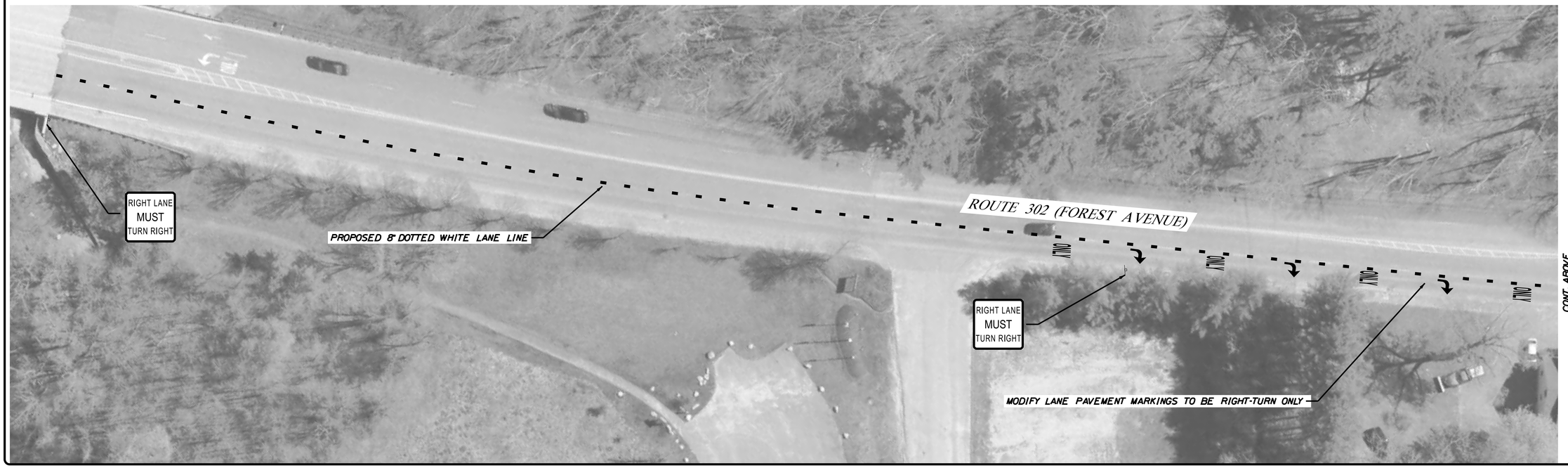

PLS OR PE

PROGRESS PRINT

PLS OR PE

NOT FOR CONSTRUCTION

DESIGNED	CHECKED
DHC	BRL

REV.#	BY:	DATE:	STATUS:
A	DHC	10/15/19	CONCEPT PLAN FOR PLANNING BOARD APPROVAL

ANY ALTERATIONS MADE TO THESE PLANS OR DRAWINGS BY ANYONE OTHER THAN SEBAGO TECHNICS, INC. SHALL BE WITHOUT LIABILITY TO SEBAGO TECHNICS, INC. AND WITHOUT INCURRING LIABILITY FOR DAMAGES RESULTING THEREFROM. THESE PLANS ARE NOT TO BE USED FOR ANY OTHER PROJECT, EXTENSION TO THIS PROJECT, OR ON ANY OTHER SITE WITHOUT THE WRITTEN PERMISSION FROM SEBAGO TECHNICS, INC. ANY REUSE, MODIFICATIONS, ALTERATIONS, OR INCORRECT INTERPRETATIONS OF THESE PLANS WITHOUT WRITTEN AUTHORIZATION BY SEBAGO TECHNICS, INC. WILL BE AT THE USER'S SOLE RISK AND WITHOUT LIABILITY TO SEBAGO TECHNICS, INC.

SEBAGO TECHNICS
WWW.SEBAGOTECHNICS.COM
75 John Roberts Rd.
Suite 4A
South Portland, ME 04106
Tel. 207-200-2100

CONCEPT OFF-SITE IMPROVEMENTS

OF:
PINE STATE FAMILY MART
1884 FOREST AVENUE
PORTLAND, MAINE 04103

FOR:
JOHN CHAU
75 ARCADIA STREET
PORTLAND, MAINE 04103

PROJECT NO.	SCALE
11142	1" = 25'

SHEET 1 OF 1

...\MS1A\11142_Concept_001.dgn

MIXED-USE DEVELOPMENT

□□□□□□□OR□□□□□□□□N□□□□□□OR□L□ND□□M□□N□

PROGRESS PRINT ONLY
Not for Construction

□□N□□RY□□□□□□□□□



□ □□□□ □O□□□ON□□N□□N□□□□□OR□□□ROM□□OR□□□□□□□N□□
N□□□



□ □□□□ □O□□□ON□□N□□N□□□□□OR□□□ROM□□□R□□N□□LO□□
N□□□

MIXED-USE DEVELOPMENT

□□□□□□□OR□□□□□□□□N□□□□□OR□L□ND□□M□□N□

PROGRESS PRINT ONLY
Not for Construction

□□N□□RY□□□□□□□□□



□ □□□□ □O□R□□□L□□□LD□N□ □□ROM□□OR□□□□□□□N□□
N□□□



□ □□□□ □O□R□□□L□□□LD□N□ □□ROM□□□R□□N□□LO□
N□□□

MIXED-USE DEVELOPMENT

□□□□□□□OR□□□□□□□N□□□□□OR□L□ND□M□N□

PROGRESS PRINT ONLY
Not for Construction

□ON□□N□□N□□□□OR□□□□R□□□□R□D□□□L□□L□□□ON

□R□□D□□L□□□□ON□□□□□LD□N□□ORN□R□
□□□□□□□

MIXED-USE DEVELOPMENT

□□□□□□□OR□□□□□□□□N□□□□□□OR□L□ND□M□N□

PROGRESS PRINT ONLY
Not for Construction

□□N□□RY□□□□□□□□□□

M□□□R□□L□□□N□□□□□□□□D□L□

	□	□OLOR□□□□N□□	□ROD□□□	M□N□□□□□□R□R	□N□□□□□□□□	M□□□R□□L□Y□□
	□	EVENING BLUE	HARDIE-PLANK	JAMES HARDIE	4" EXPOSURE - CEDAR MILL	FIBER CEMENT LAP SIDING
	□				n/a	CULTURED STONE VENEER
	□	ARCTIC WHITE	HARDIE-BOARD	JAMES HARDIE	PRE-FINISHED	FIBER-CEMENT TRIM
	□	NAVAJO BEIGE	HARDIE-PLANK	JAMES HARDIE	4" EXPOSURE - CEDAR MILL	FIBER CEMENT LAP SIDING
	□	GRAY SLATE	HARDIE-BOARD	JAMES HARDIE	PRE-FINISHED	FIBER-CEMENT TRIM
	□					
	□				PAINTED	ALUMINUM STOREFRONT

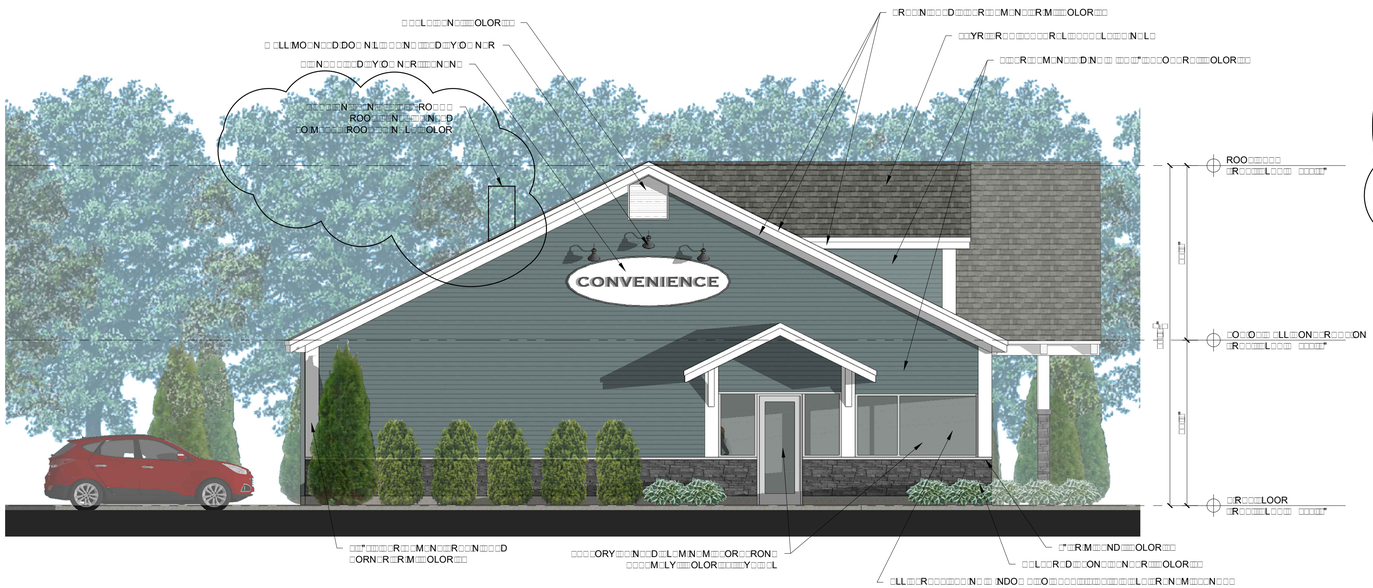
□ □□L□□□□N□□□□OLOR□□□
□ □LL MO□N□□D DO□ N L□□ □□N□ □□□D□□Y O□ N□R
□□□N□□ □□□□D□□Y O□ N□R□□□□N□N□
□□□□□□N□□N□□□□□□□□RO□□□
ROO□□□□N□□□□N□□D
□O M□□□□ROO□□□□N□L□□OLOR
□R□□N□□□D□□□□R□□□M□N□□□R M□□□OLOR□□□
□□YR□□R□□□□□□□R□L□□□□□L□□□□N□L□
□□□□R□□□M□N□□□D N□□ □□□□"□□□□O□□R□□□□OLOR□□□
CONVENIENCE
□□□"□□□□□□R□□□M□N□□□R□□N□□□□D
□ORN□R□□R M□□□OLOR□□□
□□□□ORY□□□N□□□D□□L□M N□M□□□OR□□□RON□
□□□□M□LY□□□□OLOR□□□□□□□Y□□□□L
□□□□□□□□□□

MIXED-USE DEVELOPMENT

□□□□□□OR□□□□□□N□□□□OR□L□ND□M□N□

PROGRESS PRINT ONLY
Not for Construction

□□□R□□OO□□□□□□O□ N□R□M□□□R□D□O□□□D□□□□□O□
□□□R□OR□□ □LL□□ND□□□N□□RL□N□□O□□□R□D□□ □LL□

□□N□□RY□□□□□□□□

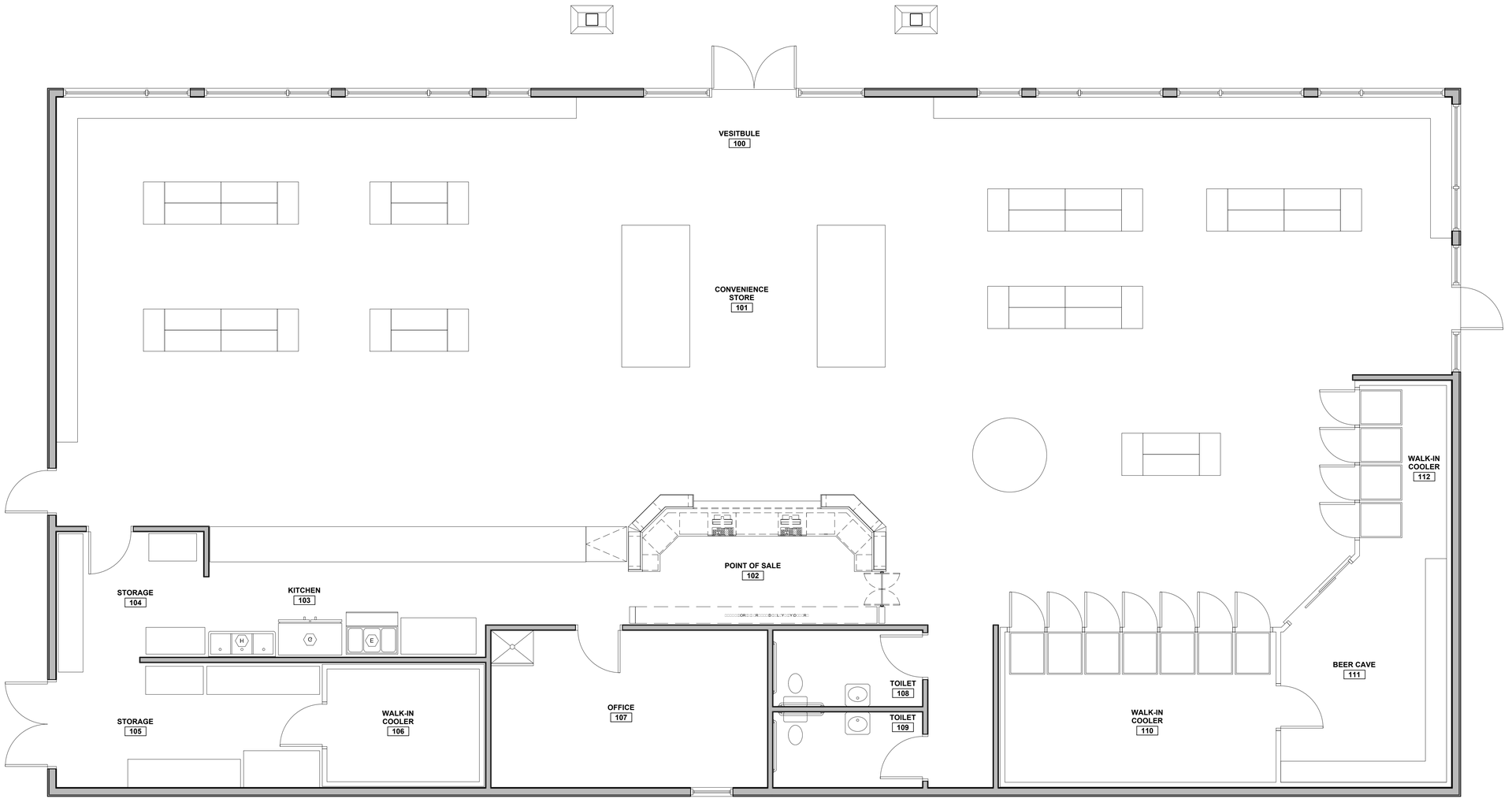

□

□ □□ □□ □□□ □□□

□ □ON□□N□□N□□□□OR□□□□R□□□LOOR□□L□N

RY□N□□□N□□OR□□ARCHITECTURE

MIXED-USE DEVELOPMENT

□□□□□□OR□□□□□□□N□□□□OR□L□ND□M□N□

PROGRESS PRINT ONLY
Not for Construction

□□N□□RY□□□□□□□□□

M□□□R□□L□□□N□□□□□□D□L□

	□	□OLOR□□□N□□□	□ROD□□□	M□N□□□□□R□R	□N□□□□□□□	M□□□R□L□Y□□
	□	EVENING BLUE	HARDIE-PLANK	JAMES HARDIE	4" EXPOSURE - CEDAR MILL	FIBER CEMENT LAP SIDING
	□				n/a	CULTURED STONE VENEER
	□	ARCTIC WHITE	HARDIE-BOARD	JAMES HARDIE	PRE-FINISHED	FIBER-CEMENT TRIM
	□	NAVAJO BEIGE	HARDIE-PLANK	JAMES HARDIE	4" EXPOSURE - CEDAR MILL	FIBER CEMENT LAP SIDING
	□	GRAY SLATE	HARDIE-BOARD	JAMES HARDIE	PRE-FINISHED	FIBER-CEMENT TRIM
	□					
	□				PAINTED	ALUMINUM STOREFRONT

R□□□L□□□LD□N□ □□□L□N□□□□□□□□□

MIXED-USE DEVELOPMENT

□□□□□□□OR□□□□□□□□N□□□□□OR□L□ND□M□N□

PROGRESS PRINT ONLY
Not for Construction

R□□□□L□□□□LD□N□ □□□□R□□ □□□R□D□□□□L□□L□□ON

□R□D□□L□□□□□ON□□□□□□LD□N□ □□ORN□R□
□□□□□□□□

MIXED-USE DEVELOPMENT

□□□□□□□OR□□□□□□□N□□□□OR□L□ND□□M□□N□

PROGRESS PRINT ONLY
Not for Construction

□□□R□□OO□□□□□□□O□ N□□R□M□□□□R□D□□O□O□□□D□□□□□□O□
□□□□R□OR□□ □LL□□ND□□ □N□□RL□N□□O□□□□R□D□□ □LL□

□□N□□RY□□□□□□□□□

□OR□□□□□□N□□

D

□

□

□

□□□□"

□□□□"

□□□□"